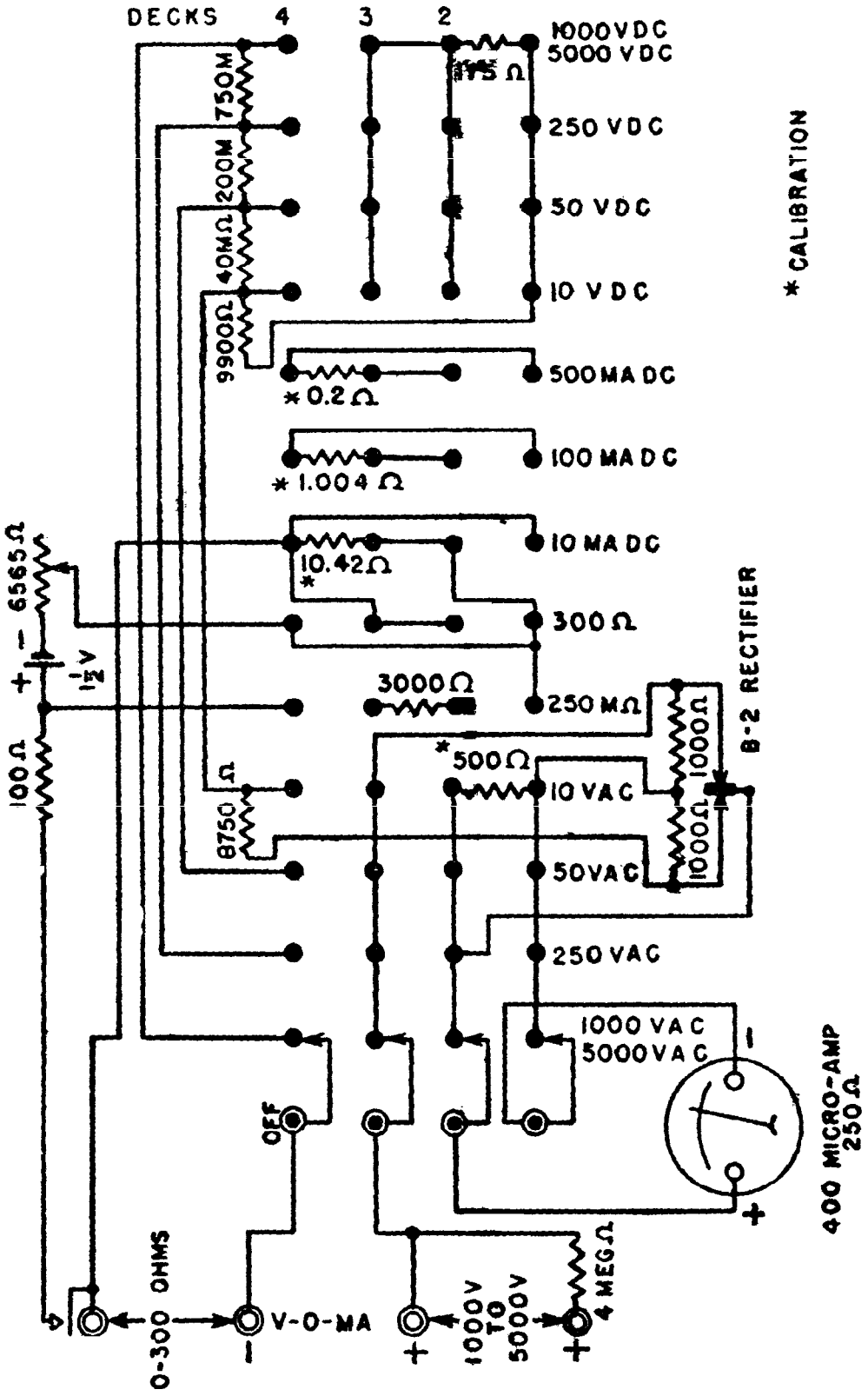

MODEL 666-H WIRING DIAGRAM

The Triplett Electrical Instrument Company

Manufacturers of

PRECISION MEASURING INSTRUMENTS

Bluffton, Ohio

Form No. 5146 Printed in U. S. A.

www.everything4lessstore.com