Haynes THE BOOK

Automotive Technical

DATA BOOK

Click on one of the buttons above to view data for this car. To return to this screen and make another choice, click anywhere on the data screen.

MENU | HELP

Engine and cooling system

700 & 4x4 1986 to 1988

Type		_
Capacity (cm³) / number of cylinders		665 / 2
Compression ratio / pressure	bar	9.0 / 10.7
Oil pressure	bar	[2.8]
Oil temperature	ºC	80
Valve clearance - inlet	mm	0.13 to 0.17
- exhaust	mm	0.23 to 0.27
Firing order		1-2
No 1 cylinder position		TBE
Thermostat opening temperature	ºC	82
Radiator cap pressure	bar	0.78 to 0.98

Fuel system

700 & 4x4 1986 to 1988

Idle speed - manual [auto]	rpm	900±50
Fast idle speed - manual [auto]	rpm	_
CO @ idle speed [3000 rpm] - see page VI	%	1.0 to 2.0
HC @ idle speed [3000 rpm] - see page VI	ppm	≤1200
CO2 @ idle speed [3000 rpm] - see page VI	%	_
O2 @ idle speed [3000 rpm] - see page VI	%	_
Carburettor / fuel injection		Hitachi
Type / ref		HCK33-3
Main jet / needle		120
Injection pressure	bar	_
Pump pressure	bar	_
Octane rating	RON	90[R]

Ignition system

700 & 4x4 1986 to 1988

Type		Contact breaker - CIS
Ignition coil		_
Primary resistance	ohms	1.15 to 1.41
Ballast resistor	ohms	_
Voltage - Tmnl 15(+) to earth	V	_
Distributor		Nippon Denso
Points gap (air gap)	mm	0.40 to 0.50]
Dwell angle	º (%)	95 to 101
Condenser capacity	µF	_
Rotation		Anticlockwise
Ignition timing - basic [static	º Crankshaft @ rpm	10±1 BTDC @ 900
V = Vacuum NV = No Vacuum		NV
Total ignition advance	º Crankshaft @ rpm	_
	º Crankshaft @ rpm	_
	º Crankshaft @ rpm	_
Centrifugal check.	º Crankshaft @ rpm	0 to 4 @ 750
	º Crankshaft @ rpm	_
	º Crankshaft @ rpm	9 to 12 @ 3000
Vacuum range check	mbar	80 to 267
Maximum vacuum advance	º Crankshaft	18 to 22
Spark plugs		NGK
Type		BPR6ES-11
Electrode gap	mm	1.1

Electrical system

700 & 4x4 1986 to 1988

Battery	V / CC / RC	12 / 35Ah
Alternator voltage / full load current / engine rpm		14.2 to 14.8 / _ / 3000
Starter motor current / voltage - cranking	A / V	_
- locked	A / V	_

Running gear

700 & 4x4 1986 to 1988

Brakes -		
Front (min. friction material thickness)	mm	_
Rear (min. friction material thickness)	mm	_
Tyres		
Saloon	Size	_
Estate / Van	Size	145x12
Pressure - front / rear - Saloon	bar	_
- Estate / Van	bar	1.9 / 2.3
Front suspension / wheel alignment		
Toe-in (+) / Toe-out (–)	mm [º]	+7.0±3.0
Camber		+30' to 2°
Castor		+12°40'±45'
King pin inclination		+9°50'
Rear suspension / wheel alignment		
Toe-in (+) / Toe-out (–)	mm [º]	+3.0±3.0
Camber		+1° to 2°10'

Torque wrench settings

700 & 4x4 1986 to 1988

Cylinder head - stage 1	Nm	29
- stage 2	Nm	59
- stage 3	Nm	64
- stage 4	Nm	_
Big-end bearings	Nm	41 to 47
Main bearings	Nm	39 to 45
Clutch cover	Nm	9 to 11
Flywheel [driveplate]	Nm	47 to 55
Front hubs	Nm	WSM
Rear hubs	Nm	WSM
Wheel nuts / bolts	Nm	78 to 98
Spark plugs	Nm	_

Capacities

700 & 4x4 1986 to 1988

Engine oil & filter	litres	2.8
Gearbox - 4-speed [5-speed]	litres	2.2
Automatic transmission - refill	litres	_
Final drive	litres	Front: 0.7
Cooling system	litres	_
Fuel tank	litres	36

Notes and Illustrations

[1]**Simultaneous ignition**

1: Idle speed 2: CO / Mixture

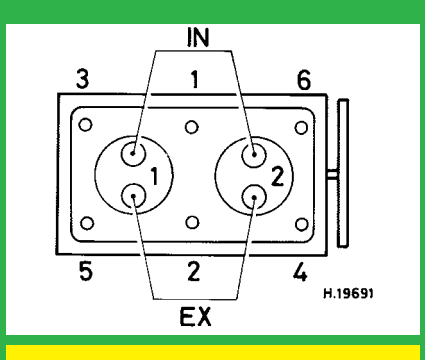

665 cm³

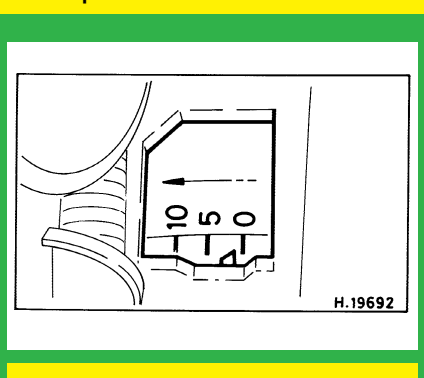

665 cm³

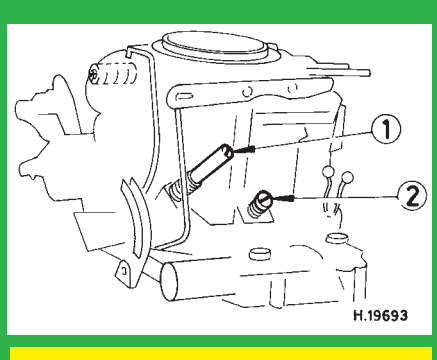

Hitachi HCK