Haynes THE BOOK

Automotive Technical DATA BOOK

Click on one of the buttons above to view data for this car. To return to this screen and make another choice, click anywhere on the data screen.

MENU | HELP

Engine and cooling system

		Corolla 1.3 (EE90) 1990 to 1992
Type		2E (OHC)
Capacity (cm³) / number of cylinders		1295 / 4
Compression ratio / pressure	bar	9.5 / ≥9.8
Oil pressure	bar	[2.5 to 4.9]
Oil temperature	ºC	80
Valve clearance - inlet	mm	0.20 H
- exhaust	mm	0.20 H
Firing order		1-3-4-2
No 1 cylinder position		TBE
Thermostat opening temperature	ºC	80 to 84
Radiator cap pressure	bar	0.74 to 1.03

Fuel system

		Corolla 1.3 (EE90) 1990 to 1992
Idle speed - manual [auto]	rpm	800±50 [850±50]
Fast idle speed - manual [auto]	rpm	1600
CO @ idle speed [3000 rpm] - see page VI	%	0.5 to 2.0
HC @ idle speed [3000 rpm] - see page VI	ppm	≤300
CO2 @ idle speed [3000 rpm] - see page VI	%	_
O2 @ idle speed [3000 rpm] - see page VI	%	_
Carburettor / fuel injection		Aisan
Type / ref		21100-11630 [640][1]
Main jet / needle		_
Injection pressure	bar	_
Pump pressure	bar	_
Octane rating	RON	91[E 91 RON]

Ignition system

		Corolla 1.3 (EE90) 1990 to 1992
Type		Electronic
Ignition coil		IIA
Primary resistance	ohms	1.3 to 1.5
Ballast resistor	ohms	_
Voltage - Tmnl 15(+) to earth	V	_
Distributor		Toyo Denso
Points gap (air gap)	mm	[0.20 to 0.40]
Dwell angle	º (%)	_
Condenser capacity	µF	_
Rotation		Anticlockwise
Ignition timing - basic [static	º Crankshaft @ rpm	5 BTDC @ 800
V = Vacuum NV = No Vacuum		NV
Total ignition advance	º Crankshaft @ rpm	_
	º Crankshaft @ rpm	_
	º Crankshaft @ rpm	_
Centrifugal check.	º Crankshaft @ rpm	0.6 to 3.6 @ 1500
	º Crankshaft @ rpm	8.4 to 11.4 @ 2500
	º Crankshaft @ rpm	24.8 to 28.8 @ 6000
Vacuum range check	mbar	133 to 573
Maximum vacuum advance	º Crankshaft	28 to 32
Spark plugs		NGK/Champion
Type		BPR5EY11 / RN9YC4
Electrode gap	mm	1.10

Electrical system

		Corolla 1.3 (EE90) 1990 to 1992
Battery	V / CC / RC	12 / 40, 60Ah
Alternator voltage / full load current / engine rpm		13.5 to 15.1 / 30 / 2000
Starter motor current / voltage - cranking	A / V	50 / 11 (no load)
- locked	A / V	_

Running gear

		Corolla 1.3 (EE90) 1990 to 1992
Brakes -		
Front (min. friction material thickness)	mm	1.0
Rear (min. friction material thickness)	mm	1.0
Tyres		
Saloon	Size	155x13
Estate / Van	Size	155x13
Pressure - front / rear - Saloon	bar	1.9 / 1.9
- Estate / Van	bar	1.9 / 1.9
Front suspension / wheel alignment		
Toe-in (+) / Toe-out (–)	mm [º]	+1.0±2.0
Camber		-10'±45'
Castor		+1°20'±45'
King pin inclination		+12°40'±45'
Rear suspension / wheel alignment		
Toe-in (+) / Toe-out (–)	mm [º]	+4.0±2.0
Camber		-35'±45'. Estate: -30'±45'

Torque wrench settings

		Corolla 1.3 (EE90) 1990 to 1992
Cylinder head - stage 1	Nm	29
- stage 2	Nm	49
- stage 3	Nm	+ 90°
- stage 4	Nm	_
Big-end bearings	Nm	39
Main bearings	Nm	57
Clutch cover	Nm	19
Flywheel [driveplate]	Nm	83 [64]
Front hubs	Nm	186[2]
Rear hubs	Nm	WSM
Wheel nuts / bolts	Nm	103
Spark plugs	Nm	18

Capacities

		Corolla 1.3 (EE90) 1990 to 1992
Engine oil & filter	litres	3.2
Gearbox - 4-speed [5-speed]	litres	2.4
Automatic transmission - refill	litres	2.5. 4 spd: 3.1
Final drive	litres	AT: 1.4
Cooling system	litres	5.0 [4.9]
Fuel tank	litres	50

Notes and Illustrations

[1]**PAS: 21100-11680 [690]**
[2]**If noisy, retighten to 273**

1: Idle speed 2: CO / Mixture

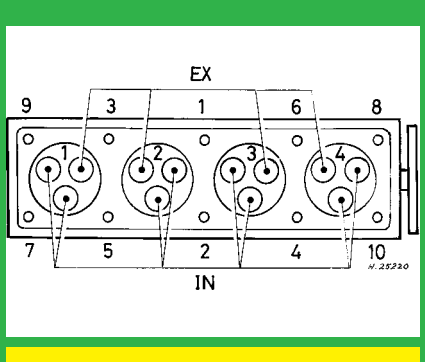

1295 cm³, 12V

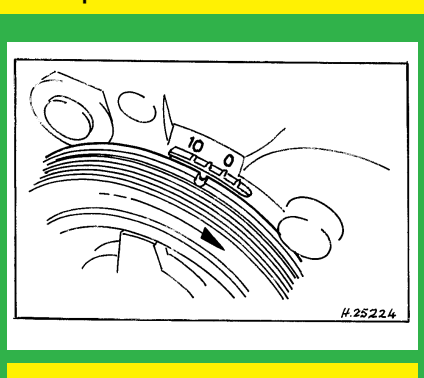

1295 cm³

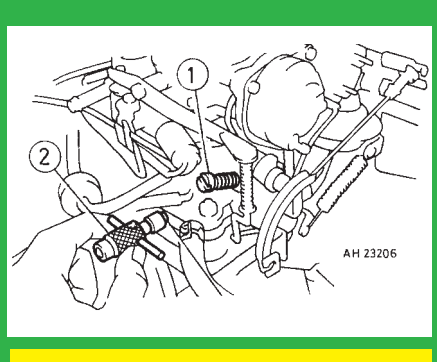

Aisan 21100-11630 / 40 / 80 / 90