Haynes THE BOOK

Automotive Technical DATA BOOK

Click on one of the buttons above to view data for this car. To return to this screen and make another choice, click anywhere on the data screen.

MENU HELP

Engine and cooling system

		Hi-Ace 2.0 (YH61) 1984 to 1989
Type		3Y
Capacity (cm³) / number of cylinders		1998 / 4
Compression ratio / pressure	bar	8.8 / ≥8.8
Oil pressure	bar	[2.5 to 4.9]
Oil temperature	ºC	_
Valve clearance - inlet	mm	0: Hyd.
- exhaust	mm	0: Hyd.
Firing order		1-3-4-2
No 1 cylinder position		TCE
Thermostat opening temperature	ºC	80 to 84
Radiator cap pressure	bar	0.70 to 1.00

Fuel system

		Hi-Ace 2.0 (YH61) 1984 to 1989
Idle speed - manual [auto]	rpm	650±50
Fast idle speed - manual [auto]	rpm	2600±100
CO @ idle speed [3000 rpm] - see page VI	%	1.5±0.5
HC @ idle speed [3000 rpm] - see page VI	ppm	≤1200
CO2 @ idle speed [3000 rpm] - see page VI	%	_
O2 @ idle speed [3000 rpm] - see page VI	%	_
Carburettor / fuel injection		Aisan
Type / ref		2V
Main jet / needle		_
Injection pressure	bar	_
Pump pressure	bar	_
Octane rating	RON	91[E 95 RON]

Ignition system

		Hi-Ace 2.0 (YH61) 1984 to 1989
Type		Electronic
Ignition coil		_
Primary resistance	ohms	1.3 to 1.6
Ballast resistor	ohms	_
Voltage - Tmnl 15(+) to earth	V	_
Distributor		Toyo Denso
Points gap (air gap)	mm	[0.20 to 0.40]
Dwell angle	º (%)	_
Condenser capacity	µF	_
Rotation		_
Ignition timing - basic [static	º Crankshaft @ rpm	8 BTDC @ 850
V = Vacuum NV = No Vacuum		NV
Total ignition advance	º Crankshaft @ rpm	_
	º Crankshaft @ rpm	_
	º Crankshaft @ rpm	_
Centrifugal check.	º Crankshaft @ rpm	0 @ 1400
	º Crankshaft @ rpm	5 @ 2100
	º Crankshaft @ rpm	19 @ 3900
Vacuum range check	mbar	105 to 440
Maximum vacuum advance	º Crankshaft	17 to 21
Spark plugs		NGK/Champion
Type		BPR5EY / RN9YC
Electrode gap	mm	0.80

Electrical system

		Hi-Ace 2.0 (YH61) 1984 to 1989
Battery	V / CC / RC	12 / 60Ah
Alternator voltage / full load current / engine rpm		13.8 to 14.8 / _ / 3000
Starter motor current / voltage - cranking	A / V	90 / 11.5 (no load)
- locked	A / V	_

Running gear

		Hi-Ace 2.0 (YH61) 1984 to 1989
Brakes -		
Front (min. friction material thickness)	mm	1.0
Rear (min. friction material thickness)	mm	1.0
Tyres		
Saloon	Size	_
Estate / Van	Size	185x14
Pressure - front / rear - Saloon	bar	_
- Estate / Van	bar	Refer to owner's handbook
Front suspension / wheel alignment		
Toe-in (+) / Toe-out (–)	mm [º]	0±2.0
Camber		+30'±30'
Castor		+2°±30'
King pin inclination		+10°±30'
Rear suspension / wheel alignment		
Toe-in (+) / Toe-out (–)	mm [º]	_
Camber		_

Torque wrench settings

		Hi-Ace 2.0 (YH61) 1984 to 1989
Cylinder head - stage 1	Nm	12mm bolt: 19
- stage 2	Nm	14mm bolt: 88
- stage 3	Nm	_
- stage 4	Nm	_
Big-end bearings	Nm	49
Main bearings	Nm	78
Clutch cover	Nm	19
Flywheel [driveplate]	Nm	83
Front hubs	Nm	WSM
Rear hubs	Nm	_
Wheel nuts / bolts	Nm	103
Spark plugs	Nm	18

Capacities

		Hi-Ace 2.0 (YH61) 1984 to 1989
Engine oil & filter	litres	3.5
Gearbox - 4-speed [5-speed]	litres	2.0 [1.8]
Automatic transmission - refill	litres	_
Final drive	litres	2.2
Cooling system	litres	9.1
Fuel tank	litres	60

Notes and Illustrations

1: Idle speed 2: CO / Mixture

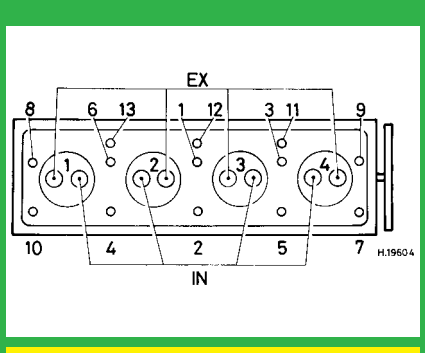

1998 cm³, 3Y

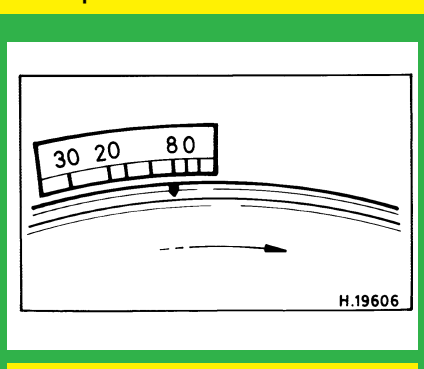

1998 cm³, 3Y

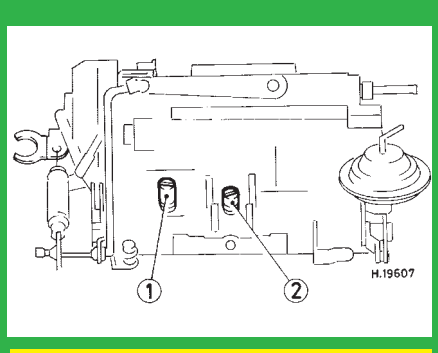

Aisan 2V