TOYOTA

Starlet 1.3 (EP90/1)

1996 to 1997

Haynes THE BOOK

Automotive Technical
DATA BOOK

Click on one of the buttons above to view data for this car. To return to this screen and make another choice, click anywhere on the data screen.

MENU HELP

Engine and cooling system

		Starlet 1.3 (EP90/1) 1996 to 1997
Type		4E-FE DOHC 16V 65kW
Capacity (cm³) / number of cylinders		1332 / 4
Compression ratio / pressure	bar	9.8 / ≥10.0
Oil pressure	bar	≥0.3 [2.5 to 5.0]
Oil temperature	ºC	80
Valve clearance - inlet	mm	0.15 to 0.25
- exhaust	mm	0.31 to 0.41
Firing order		1-3-4-2
No 1 cylinder position		TBE
Thermostat opening temperature	ºC	80 to 84
Radiator cap pressure	bar	0.75 to 1.05

Fuel system

		Starlet 1.3 (EP90/1) 1996 to 1997
Idle speed - manual [auto]	rpm	700±50
Fast idle speed - manual [auto]	rpm	_
CO @ idle speed [3000 rpm] - see page VI	%	≤0.3 N/A
HC @ idle speed [3000 rpm] - see page VI	ppm	≤200
CO2 @ idle speed [3000 rpm] - see page VI	%	_
O2 @ idle speed [3000 rpm] - see page VI	%	_
Carburettor / fuel injection		_Toyota
Type / ref		MPI
Main jet / needle		_
Injection pressure	bar	2.3 to 2.6
Pump pressure	bar	2.8 to 2.9
Octane rating	RON	95[U]

Ignition system

		Starlet 1.3 (EP90/1) 1996 to 1997
Type		Electronic
Ignition coil		_
Primary resistance	ohms	1.11 to 1.75
Ballast resistor	ohms	_
Voltage - Tmnl 15(+) to earth	V	_
Distributor		_
Points gap (air gap)	mm	[0.20 to 0.40]
Dwell angle	º (%)	_
Condenser capacity	µF	_
Rotation		_
Ignition timing - basic [static	º Crankshaft @ rpm	10° BTDC @ 700±50[1]
V = Vacuum NV = No Vacuum		_
Total ignition advance	º Crankshaft @ rpm	Computer control
	º Crankshaft @ rpm	_
	º Crankshaft @ rpm	_
Centrifugal check.	º Crankshaft @ rpm	Computer control
	º Crankshaft @ rpm	_
	º Crankshaft @ rpm	_
Vacuum range check	mbar	Computer control
Maximum vacuum advance	º Crankshaft	_
Spark plugs		Nippon Denso/NGK
Type		K16R-U / BKR5EYA
Electrode gap	mm	1.10

Electrical system

		Starlet 1.3 (EP90/1) 1996 to 1997
Battery	V / CC / RC	_
Alternator voltage / full load current / engine rpm		14.3 / 55 / _
Starter motor current / voltage - cranking	A / V	_
- locked	A / V	_

Running gear

		Starlet 1.3 (EP90/1) 1996 to 1997
Brakes -		
Front (min. friction material thickness)	mm	1.0
Rear (min. friction material thickness)	mm	1.0
Tyres		
Saloon	Size	145/80x13: 165/70x13
Estate / Van	Size	_
Pressure - front / rear - Saloon	bar	2.4 / 2.4. 165: 2.1 / 2.1
- Estate / Van	bar	_
Front suspension / wheel alignment		
Toe-in (+) / Toe-out (–)	mm [º]	1.0±2.0
Camber		-0°15'±45'
Castor		1°25'±45'
King pin inclination		12°05'±45'
Rear suspension / wheel alignment		
Toe-in (+) / Toe-out (–)	mm [º]	3.4±3.4
Camber		-0°30'±45'

Torque wrench settings

		Starlet 1.3 (EP90/1) 1996 to 1997
Cylinder head - stage 1	Nm	44
- stage 2	Nm	+90°
- stage 3	Nm	_
- stage 4	Nm	_
Big-end bearings	Nm	39
Main bearings	Nm	57
Clutch cover	Nm	19
Flywheel [driveplate]	Nm	88
Front hubs	Nm	216
Rear hubs	Nm	WSM
Wheel nuts / bolts	Nm	103
Spark plugs	Nm	18

Capacities

		Starlet 1.3 (EP90/1) 1996 to 1997
Engine oil & filter	litres	3.2
Gearbox - 4-speed [5-speed]	litres	1.9
Automatic transmission - refill	litres	2.5
Final drive	litres	WT
Cooling system	litres	4.8
Fuel tank	litres	_

Notes and Illustrations

[1]**TE1 & E1 shorted**

1: Idle speed 2: CO / Mixture

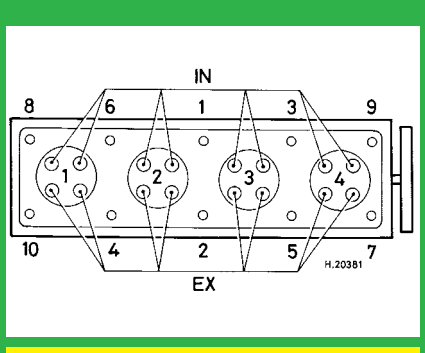

1332 cm³ 16V

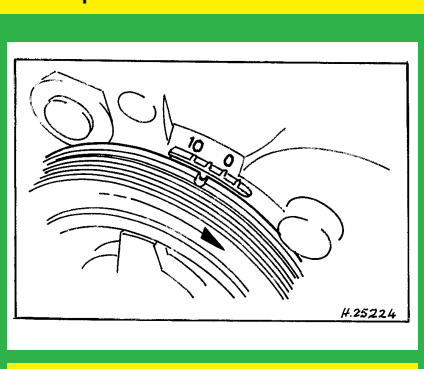

1332 cm³ 16V

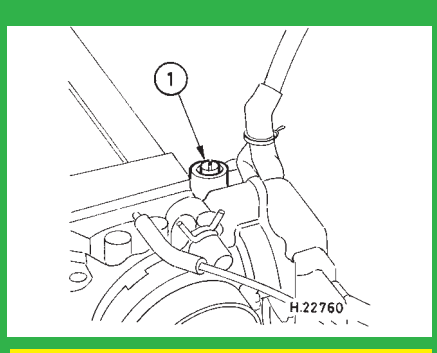

1332 cm³ 16V