Albrecht

Service Manual

AE-540

2-METER AMATEUR FM MOBILE TRANSCEIVER

CONTENTS

SPECIFICATIONS

General

Frequency Resolution	5, 10, 12.5, 15, 20, 25 KHz STEP
Frequency Range	TX 144.00~146.000 MHz, RX 136.00~174.00 MHz
Semiconductors	33 Transistors, 30 Diodes, 10 ICs, 3 FET, 1 LCD
Crystals	3 Crystals
Microphone	Built-in Electric Condenser Type with FET Amplifier
Speaker	8 ohm 3W
Antenna Connector	M Type
Dimensions(WHD)	5-4/34"x 1-3/8"x 5-33/64"Inches (130 x 35 x 140)mm
Accessories	DC Power Cord With in-line fuse, Microphone Hanger, Mounting Bracket
Weight	1.54 lbs (0.78 Kg)

Measurement Conditions (90% Population)

Power Source	13.8V (DC)
Antenna Impedance	50 ohm
Test Temperature	77°F (25℃)
FM Modulation Frequency	1kHz
Min. Signal Input Level	24mV
Reference Audio Output Power	0.5W
Reference FM Modulation	3 KHz Deviation at 1 KHz
Audio Output Load	8 ohm resistive

Transmitter Section

Description		Unit	Normal	Limit
Frequency tolerance		%	±0.005	±0.001
RF power output				
13.8V DC	HI	W	25	20
	LOW	W	10	8
Maximum deviation		KHz	4.0	3.0~5.0
Distortion Mic at 1.5 KHz deviation		%	3	6
Microphone sensitivity		mV	3	10
CTCSS Tone deviation (88.5)		KHz	0.7	0.4~1.2 KHz
Current drain				
13.8V DC	HI Power	A	5.0	7.5
	LOW Power	A	3.0	5.0
Mod frequency response (450 Hz)		dB	-7	-7
(2.5 KHz)		dB	+3	+3±12
Hum & noise ratio (1.5 KHz DEV)		dB	35	30
Adjacent channel power (±25 KHz)		dB	65	60

Receiver Section

Intermediate Frequency
1st IF = 21.4 MHz 2nd IF = 455 KHz

Description		Unit	Normal	Limit
Maximum sensitivity 12 dB SINAD		dBuV	-14	-10
Squelch sensitivity				
	Threshold	dBuV	-20	±10
	Tight	dBuV	-9	±10
Hum and Noise		dB	40	35
Distortion at 1mV input, 3 KHz modulation		%	2	10
Max Audio power at 8 ohms		W	3.4	2.5
Audio output power at 10% THD		W	2.5	2.0
Audio fidelity				
	400 Hz	dB	+5	+5±6
	2500 Hz	dB	-16	-16±10
S meter sensitivity at "9"		dB	9	+9±6
Audio frequency response (6 dB/oct)		dB	6	+2 to -8
1/2 IF rejection ratio		dB	65	60
Image rejection ratio		dB	65	60
IF rejection ratio		dB	90	60
Adjacent channel selectivity (25 KHz)		dB	55	50
Acceptance ratio displacement		KHz	2.5	2.0
Oscillator dropout voltage		V	10.2	12
Current drain				
	No signal (Squelch)	mA	300	600
	Current drain at maximum signal	mA	600	750

DISASSEMBLY INSTRUCTIONS

■ **To remove the Top and Bottom Cover (Figure 1)**
- Remove two mounting screws Ⓐ.
- Remove four screws Ⓑ from each side of the top and bottom covers.

■ **To remove the Front panel Assmbly (Figures 2,3 and 4)**
- Remove ring nut Ⓒ.
- Remove one knobs Ⓓ.
- Remove four screws Ⓔ from each side. Pull the front panel.

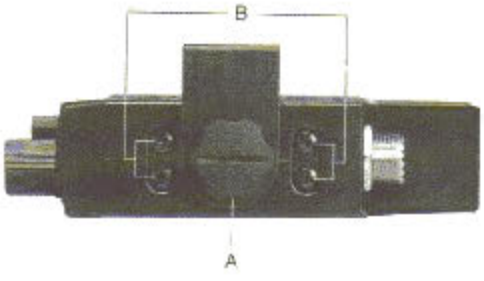

Figure 1

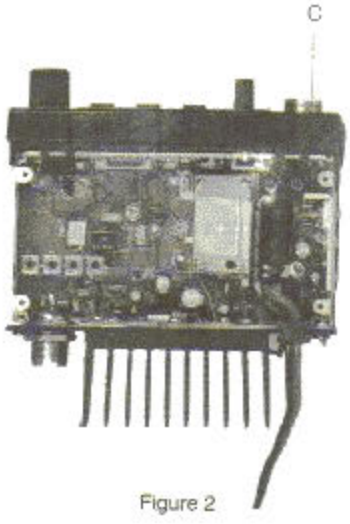

Figure 2

Figure 3

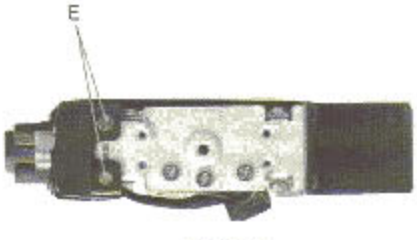

Figure 4

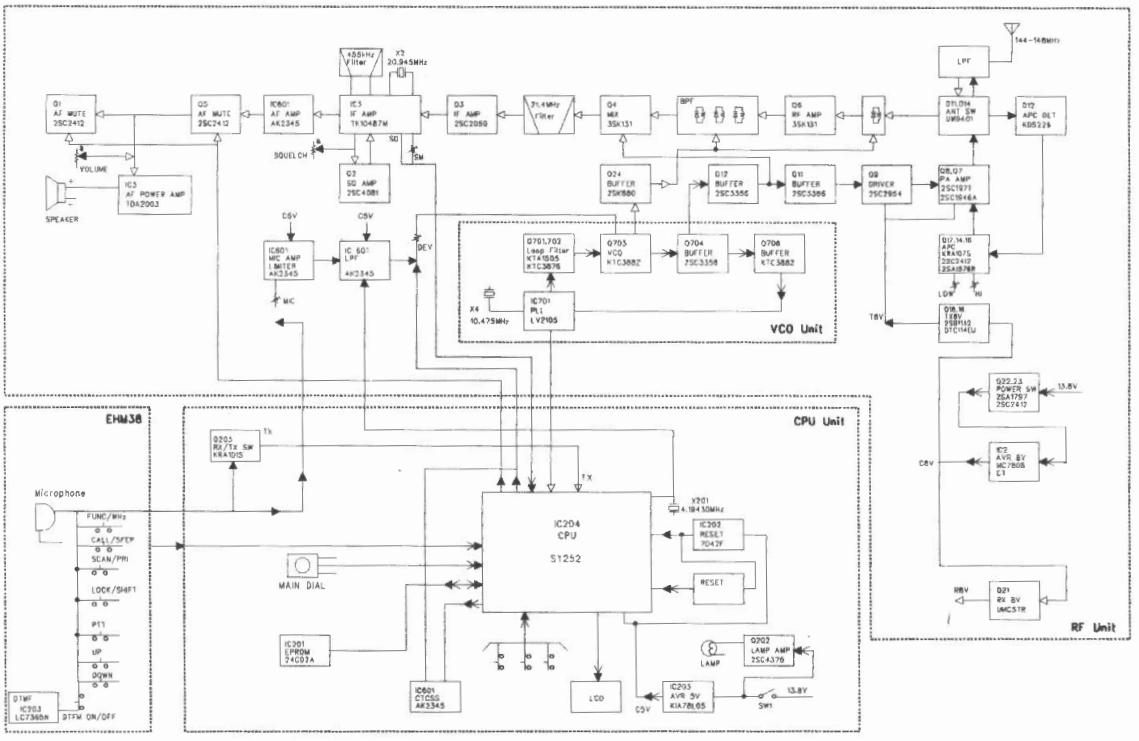

ALIGNMENT AND ADJUSTMENT

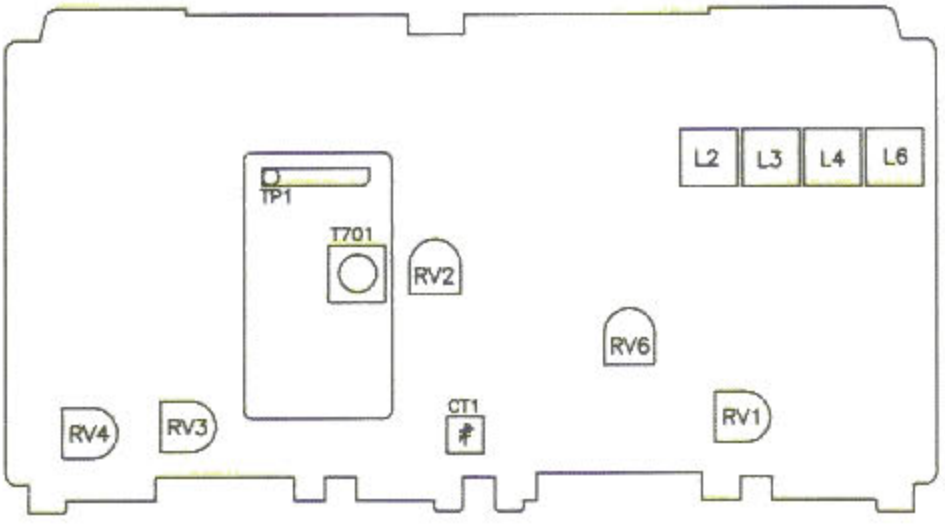

Alignment Parts Locations

Required Test Equipment

1. **Digital Multimeter**
   Voltage Range : FS = 18V
   Input Resistance : 1MΩ or MORE
2. **Regulated Power Supply**
   Supply Voltage : 13.80V
   Current : 10A or MORE
3. **Oscilloscope**
   Measurable Frequency : DC to 200MHz
4. **Spectrum Analyzer**
   Measuring Range : UP to 2GHz MORE
5. **Tracking Generator**
   Output Frequency : UP to 2GHz MORE
6. **Audio Dummy Load**
   Impedance : 8Ω
   Dissipation : 5W or MORE
7. **SSG**
   Output Frequency : 1GHz or MORE
   Output Level : -20dB/0.1uV to
   Modulation : FM
8. **Frequency Counter**
   Measurable Frequency : UP to 200MHz
   Measurement Stability : 0.2 PPM
9. **RF Powerency Counter**
   Measurable Frequency : UP to 200MHz
   Impedance : 50Ω
   Measure Range : Full Scale of 35W
10. **Audio Volt Meter**
    Measurable Frequency : 50Hz to 10KHz
    Sensitivity : 1mV~10VRE
11. **Distortion Meter**
    Measurable Frequency : 1KHz
12. **Audio Generator**
    Output Frequency : 50Hz and 1KHz
    Output Impedance : 600Ω Unbalanced
13. **Linear Detector**
    Measurable Frequency : Up to 500MHz
    Characteristics : Flat 120dB/1V
    CN : 60dB or MORE
14. **RF Attenuater**
    Impedance : 50Ω
    Dissipation : 50W or MORE
15. **RF Dummy Load**
    Impedance : 50Ω

PLL Section

■ **Test Equipment Required:**

- Frequency Counter :
- RF Attenuator
- DC Power Supply
- DC Voltmeter

■ **Test Equipment Connection**

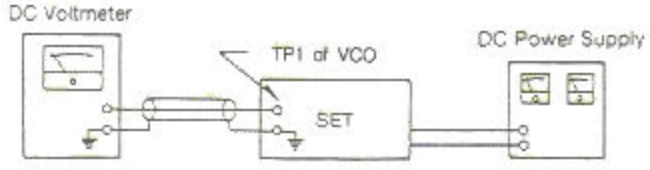

(Figure 1)

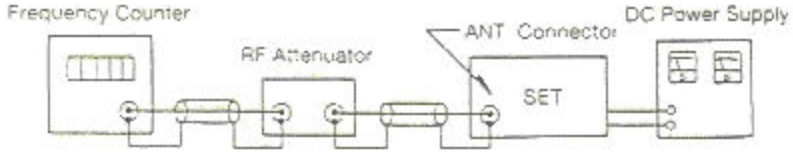

(Figure 2)

Alignment Procedure

Step	Setting	Connection	Adjust	Adjust For
1	VCO Voltage Adjustment Frequency : 136.00 MHz MIC : Receive Volume : Optional Squelch : Optional	DC Voltmeter To TP1 (Figure 1)	TP1(VCO)	0.6V~0.9V (DC)
2	Frequency Adjustment Frequency : 146.520 MHz MIC : Transmit (NO Mode) Function : None Volume : Optional Squelch : Optional	Antenna to Frequency Counter Through RF Attenuator (Figure 2)	CT1	Within 500 Hz

Transmitter Section

Equipment Required

- RF Power Meter
- RF Attenuator
- Audio Generator
- Spectrum Analyzer
- Coupler
- 50Ω Dummy Load
- Oscilloscope
- DC Power Supply
- Frequency Counter
- Modulation Meter (FM)

Test Equipment Connection

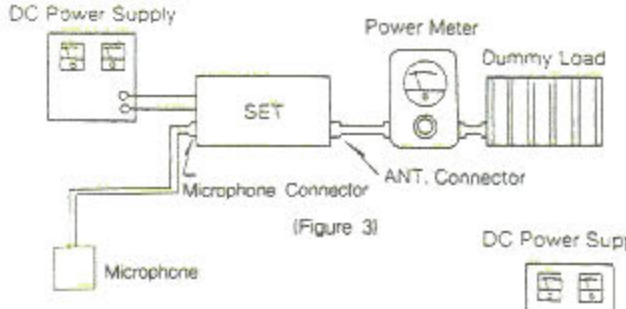

(Figure 3)

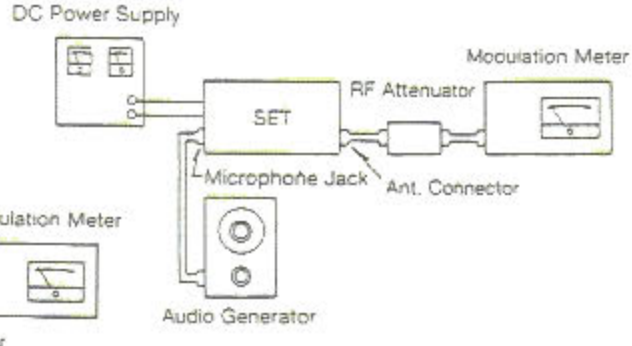

(Figure 4)

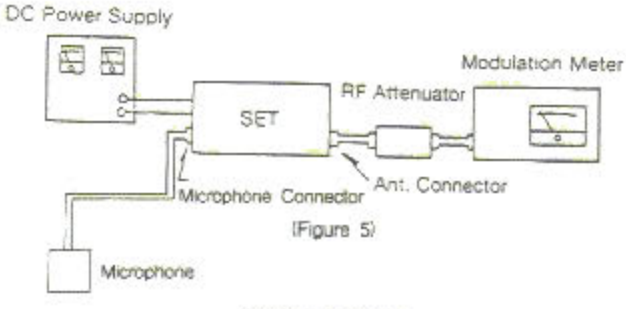

(Figure 5)

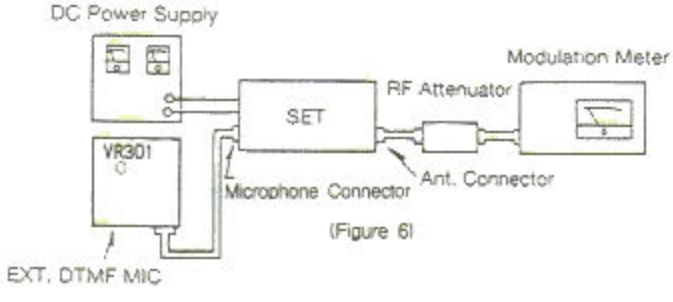

(Figure 6)

Alignment Procedure

Step	Setting	Connection	Adjust	Adjust For
1	RF High Power Adjustment Frequency : 146.520MHz MIC : Transmit Function : None Volume : Optional Squelch : Optional RF Power Selection : High	Connect Microphone. Connect the Dummy Load to Antenna Connector on the Set through RF Power Meter. (Figure 3)	RV3	25W (20W ~ 30W)
2	RF Low Power Adjustment Frequency : 146.520MHz MIC : Transmit Function : None Volume : Optional Squelch : Optional RF Power Selection : Low	Connect Microphone. Connect the Dummy Load to Antenna Connector on the Set through RF Power Meter. (Figure 3)	RV4	10W (8.0 ~ 12W)
3	AF Modulation Adjustment Frequency : 146.520MHz MIC : Transmit Function : None Volume : Optional Squelch : Optional RF Power Section : Low	Connect the Audio Generator (Set to 1KHz) to the Microphone Connector. Connect the Modulation Meter Through the RF Antenna Connector. Adjust the audio Signal Level to Obtain 3KHz Deviation. When You Increase the Audio Signal by 20dB, the Deviation Should not Exceed 5KHz Deviation (Figure 4)	RV2	4.0KHz (3.0 ~ 5KHz)
4	CTCSS Modulation Adjustment Frequency : 146.520MHz MIC : Transmit Function : CTCSS Mode (CTCSS : 88.5Hz) Volume : Optional Squelch : Optional RF Power Selection : Low	Connect Microphone. Connect Modulation Meter through RF Attenuator. Connect RF Power Meter to Antenna Connector on the Set (Figure 5)	RV6	0.8KHz (0.5 ~ 1.2KHz)
5	DTMF Modulation Adjustment Frequency : 146.520MHz MIC : Transmit Function : MIC DTMF Mode Volume : Optional Squelch : Optional RF Power Selection : Low	Connect the EXT. DTMF MIC to Microphone Connector. Connect Modulation Meter through RF Attenuator to Antenna Connector. (Figure 6)	VR301	3.5KHz (2.0 ~ 4KHz)

Receiver Section

Equipment Required:

- Standard Signal Generator (SSG)
- Distortion Meter
- 12dB Sinadder (Signal-Noise Adder Meter)
- AC Level Meter
- DC Power Supply

Test Equipment Connection

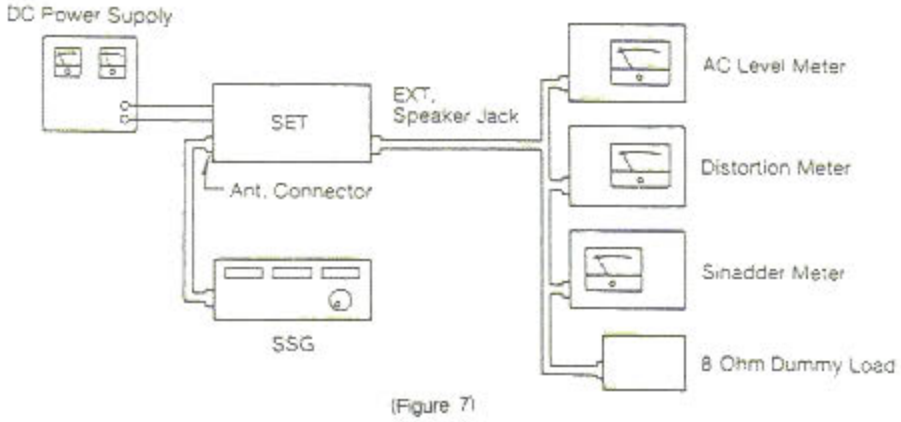

(Figure 7)

Alignment Procedure

Step	Setting	Connection	Adjust	Adjust For
1	RX Sensitivity Adjustment Frequency:136.00~174.000 MHz MIC : Receive Function : None Volume : Adjust for 1V on Squelch : Turn Fully Counterclockwise SSG : Audio 1KHz Modulation 3KHz DEV	Connect Standard Signal Generator to EXT Antenna Jack. Connect AC Volt Level Meter, Distortion Meter, and Sinadder Meter Across EXT Speaker Jack With 8 Ohm Load (Figure 7)	L2 L3 L4 L6	Maximum Indication on AC Level Meter. Maximum Sensitivity Indication on 12dB Sinadder Meter. In the Above Condition, Sensitivity is Flat for 136.00~174.00MHz and Sinad is Above 12dB at~10dBuV (SSG Attenuator Level)
2	Level Meter Adjust Frequency:136.00~174.000 MIC : Receive Function : None Volume : Adjust for 1V on the AC Level Meter Squelch : Turn to Counterclockwise SSG : Audio 1KHz Modulation 3KHz DEV Level 9dBuV	Connect Standard Signal Generator to EXT-ANT Connector. Connect AC Volt Level Meter, Distortion Meter Across EXT Speaker Jack With 8 Ohm Dummy Load (Figure 7)	RV1	9dBuV

TROUBLESHOOTING

Symptom	Cause and Remedy
Unit Will Not Turn On	· Broken/defective DC Power Cord · Blown fuse. Be sure you check for the cause. · Defective power switch · Defective wires or poor soldering in power supply circuit.
No Sound Received:	· Defective External Jack · Defective RF circuit in receiver · Defective IF circuit IC IC1 · Defective audio power IC IC3 Check Voltage at pin 4 of IC3; if approximately 6V, problem is not with this IC · Defective Receiver power circuit Check Voltage Transistor (BRT) Q21 pin Nr4 If approximately 8V, problem is not with this circuit. · Squelch is "ON" all the time. If voltage at Base of Q1,Q5 is approx 0 Volt with Squelch Control is set to fully counterclockwise position, problem is not in with squelch circuit. Defective Q1, Q5 · Check whether the transceiver signal strength meter indicates S9 when a signal (146.520MHz carrier with 1KHz FM 3KHz Deviation. 1uV level) is supplied to antenna (The metal indication would be as following A and B) A) The meter indicates "S-9". You can assume that antenna through IF stage is OK. No Sound.... Check the integrated Voice signal circuit IC IC601 if pin7 of IC601 signal out, problem is not in with Voice signal circuit. B) No deflecting of meter. Checking should be made on RF stage Q12, D17, 4, Q6 and IF stage IC1, if not then, problem is in PLL circuit. Check frequency on collector of Q12 whether it is listed as in the table (Page 9, Alignment procedure, step1) · Defective Squelch circuit. · Defective PLL circuit. · Defective antenna connector
No Noise	· Broken or bad contact in microphone connector or push-to-talk switch. · Defective RX power circuit. · Defective RX audio circuit. · Defective IF circuit. · Defective PLL circuit. · Defective squelch circuit

Symptom	Cause and Remedy
No Transmission	· Broken or bad contact in microphone connector or push-to-talk switch. · Broken or bad contact in antenna connector. · Defect in PLL or Carrier Oscillator (Improper adjustment). · Check the frequency at collector of Q9. If no carrier, check Q11, D17, Q12 and X4. · Carrier is OK, but no TX; check the Vco voltage at TP (approx 2V), if not same as listed in VCO adjustment table figure 1, PLL circuit is defective. · Defect in power module circuit. If above procedure working well. Check the carrier at collector of Q8, Q7, if no carrier, check Q8, Q7 and supply power circuit.
No Modulation	· Defective microphone. · Defective microphone connector. · Inoperative microphone amplifier. · Defective microphone amplifier IC IC601 Check the voltage at pin 8 and Oscillation input at pin8 and audio input at pin 1 of IC601 If audio signal out at pin 6 of IC601, then the CTCSS IC IC601 is OK
No DTMF Modulation	· DTMF power switch off. · Defective DTMF power switch. · Defective DTMF IC IC301 Check the voltage at pin 1 of IC301 (approx 5V). If signal out to pin 16 of IC601 when pressed DTMF key pad, then this IC is good. · Improper position semi VR VR301.
No Scan	· Defective IC204 · Defective IC1 · Defective scan circuit: Check Q2, D3.
No LCD Display	· Defective IC204, LCD, 4.5MHz oscillator: Check IC201, IC202, IC203.

Note : For remedy, replace or repair the defective circuits or component(s).

PRINTED CIRCUIT BOARDS

Main PCB (Top View)

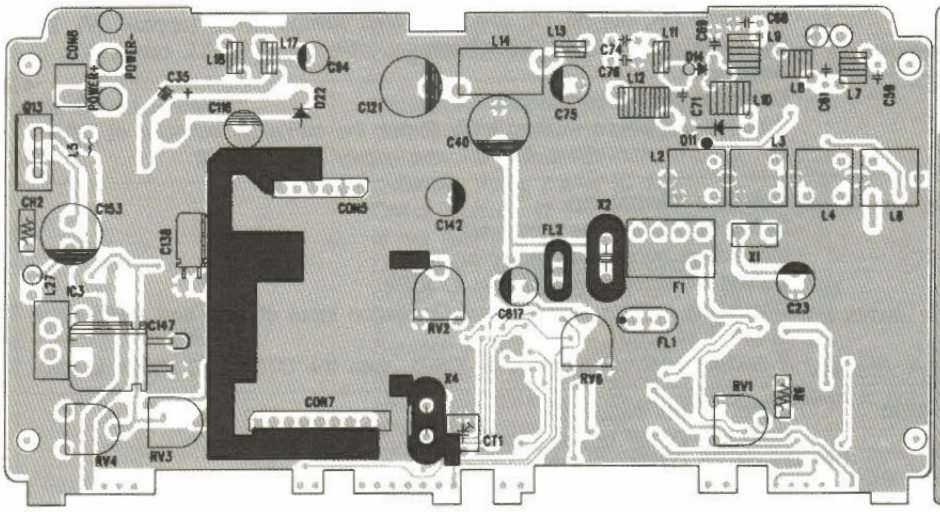

Power Module PCB (Top View)

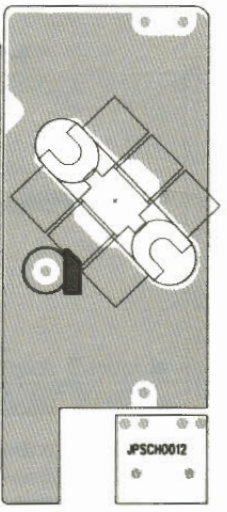

Power Module PCB (Bottom PCB)

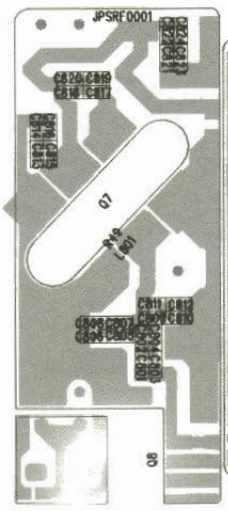

Main PCB (Bottom View)

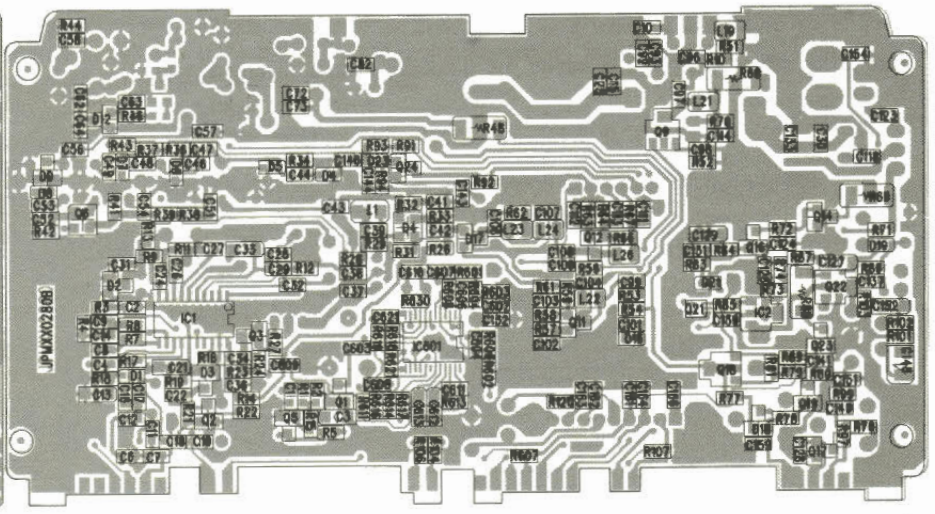

Control PCB (Top View)

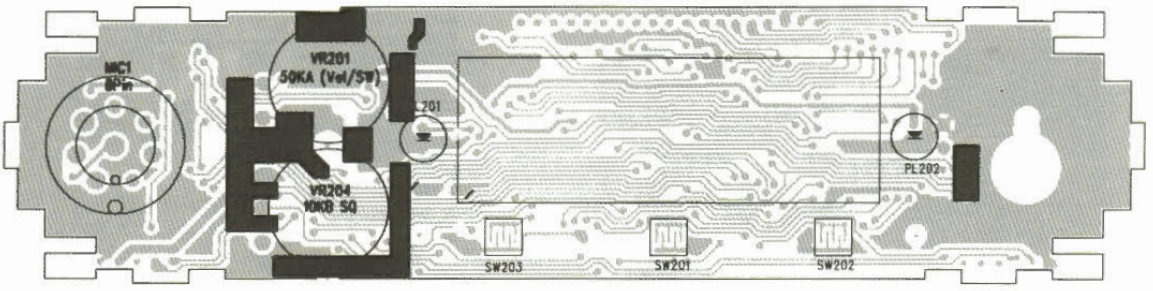

Control PCB (Bottom View)

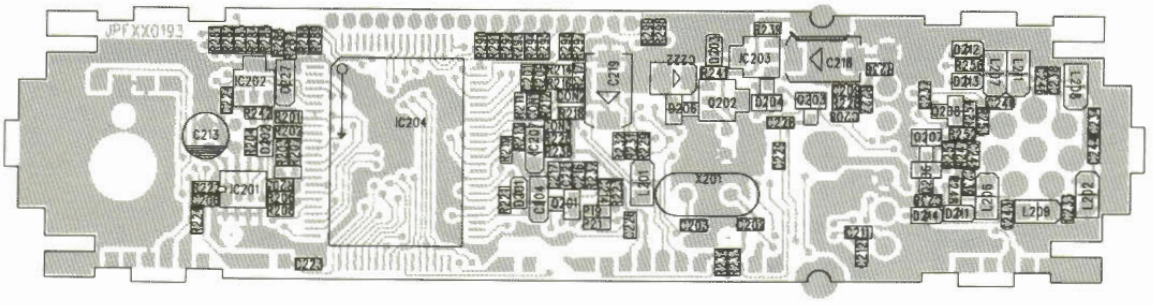

VCO PCB (Top View)

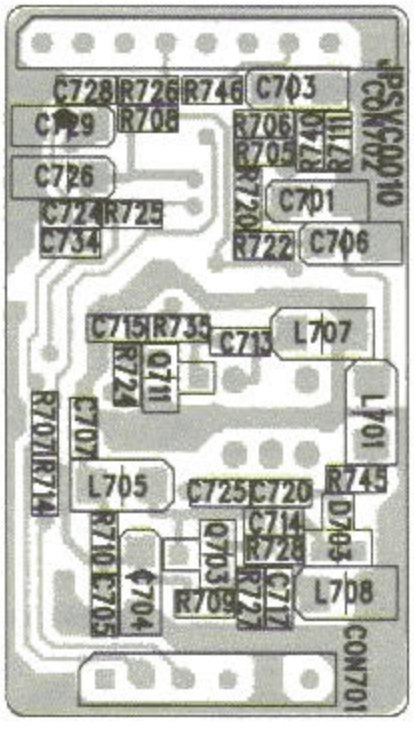

VCO PCB (Bottom View)

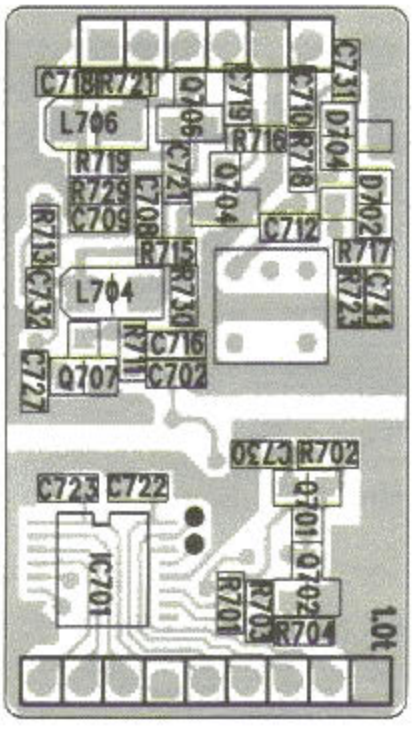

MIC PCB (Top View)

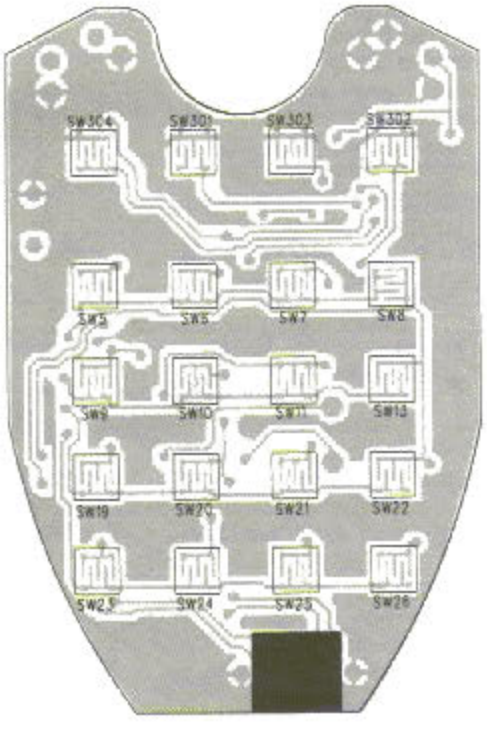

MIC PCB (Bottom View)

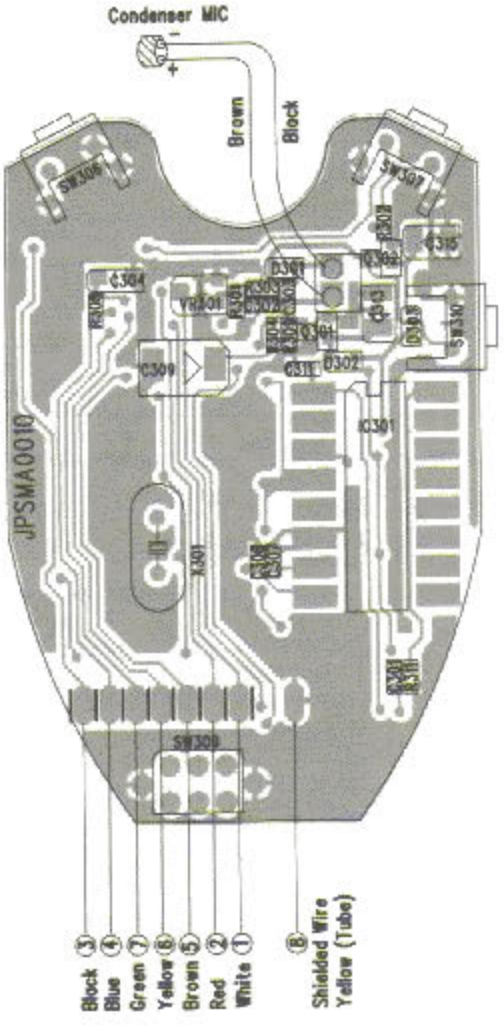

EXPLODED VIEW

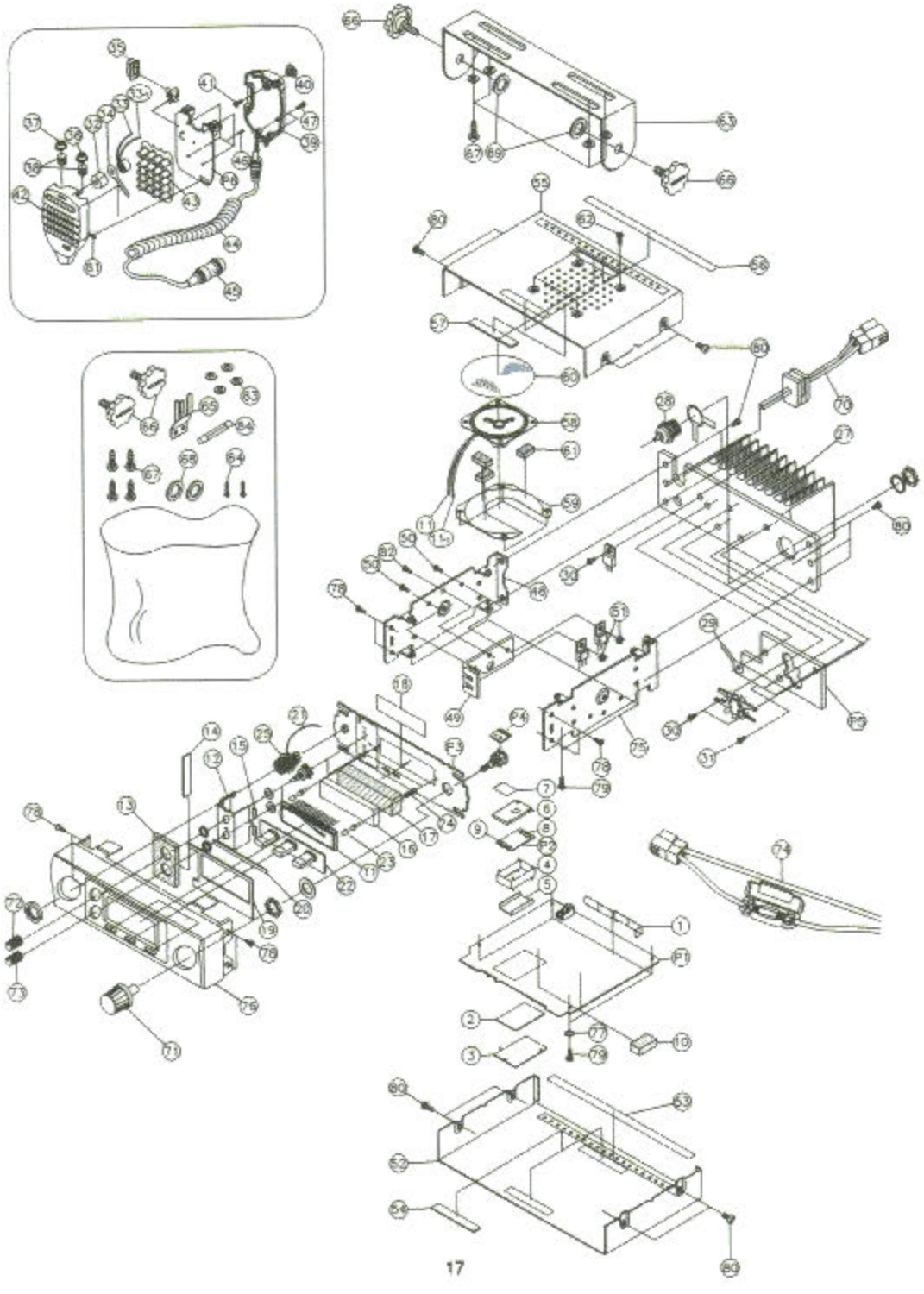

EXPLODED VIEW PARTS LIST

Ref. No.	Description	Mfr's Part No.
	ASS'Y-PCB, MAIN	**JPMXX0268**
1	ANT Shield Plate, 80x10x0.5t (Copper)	GPHA80X10
2	Back Shield Plate, 39x22x0.5t	GPHB40001
3	Fiber Plate, 21.5x37x0.5t	GPR213705
4	VCO Shield Case, SY-130 (BSBP 0.3t)	GPHS009XX
5	VCO Copper Plate, 27.5x30x0.3t	GPHVXX003
6	VCO Shield Case CAP, SY-130 (BSBP 0.3t)	GPHS010XX
7	VCO Shield Copper Tape	GPHVXX103
8	Flat Wafer, 6P 2mm (F200M 6SS 2)	GWCF062XX
9	Flat Wafer, 9P 2mm (F200M 9SS 2)	GWCF092XX
10	PCB Cushion, 12x8x5t	GOUP12X85
11	General Wire, 0.16/7 2-7 Black 100mm	GWGA3L100
11-1	General Wire, 0.16/7 2-7 Brown 100mm	GWGA3W100
	ASS'Y-PCB, FRONT	
12	Volume Bracket, CB-220	GDVCB220X
13	Volume Felt, 26x20	GOFV26X20
14	Cushion(B), 20x3x2.0t	GOUF003XX
15	Fiber Plate B, 20x20x0.5t (PRO-200)	GPR20X20B
SW207	Switch, Channel, YPS2101, 155K(15mm), w/nut, Washer	JSC2101YX
VR201	Volume, Single Round, A50K, w/nut, Washer	JVR050KAV
VR202	Volume, Single Round, B10K, w/nut, Washer	JVR010KBV
T1	LCD, KXN31931DAP	JLCK31931
16	LCD Housing Spray, 48x17 CB-240N	GELH00300
17	LCD Cushion, 46x16x8t (EVA)	GOUL46X16
18	Two Sides Tape, W20mm (1Cm)	GZTT020X1
19	LCD Copper Plate, 57.0x32x0.1t	GPD003XXX
20	Fiber Plate (C), 50x5x0.3t	GPR50X50C
21	General Wire, 0.12/7 2-7 Black 40	GWGE3L40X
22	Rubber Key Pad, Black Si-Rubber	GODK007XX
PL201-202	Pilot Lamp, 3pie 60mA 10V	JL3P10VXX
23	Lamp CAP, 3pie (Yellow)	GOKL3PIEY
24	Lamp Supporter, 3piex7	GOKLS3P7X
25	MIC Socket, SCN168(R-PCB/S2)w/nut Ring	GNS168RPS
	ASS'Y-HEAT SINK	**JPWXX0268**
27	Heat Sink, AE-540	GCHA019XX
Q7	Transistor, 2SC1946A	JT2S1946A
Q8	Transistor, 2SC1971	JT2S1971X
28	ANT Connector CH-239 (SIN) w/termi lug	GNCAC239X
29	Terminal LUG (Clamp), 3pie	GOT03PIEC
30	Pan Head T/S-2S, 3x6(Zn)	GSPT2ZX42
31	Bind Head T/S-2S, 3x6(Zn)	GSBT2ZX06

Ref. No	Description	Mfr's Part No
	Ass'y-Microphone	**JMHTX252X**
MIC301	Condenser MIC, CMT-70 (10pie)	JZDCMT70X
32	Condenser MIC Holder, Rubber (PRO-200)	GCOICONRU
33	General Wire, 0.12/7 2-7 Black 40	GWGE3L40X
33-1	General Wire, 0.12/7 2-7 Brown 40	GWGE3W040
34	Terminal Rug Spray, 3pie 1Side Spray	GOTO3PICY
35	MIC PTT Key Knob, SY-550 Si-Rubber D/Gray	GMKKS550X
36	MIC Down Knob Spray AE-540	GMKDS550B
37	MIC Up Knob Spray, AE-540	GMKUS550B
38	Knob Spring, STS304 0.2t	GRXX001XX
39	MIC Back Cover, AE-540	GMVBH252X
40	MIC Back Button, 0.75g(Black)(UL94HB)	GMT075GBK
41	Pan Head T/S-2S, 3x6(Zn)	GSPT2ZX42
42	MIC Front Cover, AE-540	GMVFH252X
43	DTMF Key Pad, AE-540	GBPK004XX
44	MIC 7C-1S Cord, 300mm S:7mm(URETAN)	JZM7C1SBK
45	MIC Plug N-16-8(P)	GNP168PXX
45	PVC Tube, 4.6pie(1Cm) Black	GZUC4R6L1
45	Empire Tube, 1.5pie(1Cm)	GZUE1R5P1
45	Heat Shrink Tube, 7pie 10mm/Black	GZUS7010L
SW309	Slide Switch GS2206A	JSS2206AX
46	Bind Head T/S-2S, 2x4(Zn)	GSBT2Z2X4
47	Pan Head T/S-2S, T2.3x8(Cotting Black)	GSPT2B204
81	Mike Slide, Knob Spray	GKDH252XY
	ASS'Y-Chassis, Side(L)	**JCHTX252X**
48	Side Chassis(L), SY-540 (EGI 1.0t)	GCCSS540L
Q13	Transistor, SB1292, R/TX Switching	JT2S1292X
IC3	IC, ULN3703ZV (TDA2003), Audio AMP	JILN3703X
49	Heat Sink(B), AE-540 2.0t	GCHA020XX
50	Flat Head Screw, M3x10(Zn)	GSFMOZ134
51	Hex NUT, M3(Zn)	GSNHOZX12
82	Flat Head Screw T/S-2	GSFT2ZX22
	ASS'Y-Cover, Bottom	**GVTHTX252**
52	Bottom Cover Spray, SY-540 Black	GVPS540XY
53	Cover Felt-A, 125x14x0.3t	GOFC125X1
54	Cover Felt, 8x30x0.5t	GOFC8X300
	ASSY'Y-Cover, Top	**GVBHTX252X**
55	Top Cover Spray, SY-540 Black	GVMS540XY
56	Cover Felt-A, 125x14x0.3t	GOFC125X1
57	Cover Felt, 8x30x0.5t	GOFC8X300
58	Speaker, ER-05001-01	JOPO5001X
59	Speaker Bracket, SY-130 EGI 1.0t	GDPS130XX
60	Speaker Felt, 53x0.5t	GOFS53PXX
61	Cushion, 8x12x3t(EVA)	GOUR8X123
62	Bind Head Screw, M3x6(Black/V3NL6)	GSBMOB303

Ref. No	Description	Mfr's Part No
	Installation Kit	**GINSHTX252**
63	Mounting Bracket Spray, KR-10/KR-30/CB-40/CB404	GDMKR10AY
64	Bind Head T/S-1S, 3x10(Ni)	GSBT1NX20
65	MIC Hanger, All-Mode(Ni)	GMAALLMOD
66	Mounting Screw, M4x8(Black)	GSMS04X8L
67	Truss Head T/S-1, 5x12(Black)	GSTT1BX17
68	Flat Washer, OD15xID5.2x0.5t(Black)	GSWFOBX18
69	Rubber Washer, M3(Black)	GSWRO5X15
83	Spring Washer, M3(Black)	GSWSOBX19
84	Fuse, 250V, 10A(6piex30L)	JZF250V17
74	DC Power Cord(B), HTX-10 Female (10A Fuse)	GWPHTX10X
	Parts Individual	
70	DC Power Cord(A), AE-540 Male	GWPHTX252
71	Channel Knob Spray, KR-40N (Black)	GKCKR40NY
72	Volume Knob Spray, CB-220N (Black)	GKVC220NY
73	Squelch Knob Spray, CB0220N (Black)	GKVC220NY
75	Side Chassis(R), SY-540 (EQI 1.0t)	GCCSS540R
76	Panel, Front Bezel Spray, AE-540 Black	GAF09303B
P1	ASS'Y-PCB, Main	JPMXX0268
P2	ASS'Y-PCB, VCO	JPSVC0008
P3	ASS'Y-PCB, Front	JPFXX0181
P4	ASS'Y-PCB, Channel	JPDCX0120
P5	ASS'Y-PCB, Power Module	JPMPX0268
P6	ASS'Y-PCB, Microphone	JPSMA0006
	Hardware Kit	**GHARHTX252**
77	Tooth Washer M3(ZNW)	GSWT0Z001
78	Flat Head Screw M2, 6x5(Zn)	GSFMOZX01
79	Pan Head Screw M2, 6x6(Zn)	GSPMOZX14
80	Tap Tight Screw M3x6(Black)	GSABBO302

ELECTRICAL PARTS LIST

Ref. No	Description	Mfr's Part No.
P1	ASS'Y-PCB, MAIN	JPMXX0268
	Coils	
L1	Inductor, Chip, 10uH (LEM2520)	JBII10XCX
L2-4	IFT, ST110-134, 7.3mm	JAST1101X
L5	Spring L001 (0.6x4.0x29.5t)	JBISL001X
L6	IFT, ST110-134, 7.3mm	JAST1101X
L7-10	Spring, OKA45E (0.8x3.0x4.5t)	JBIS08035
L11	Spring, 1.5T (0.6x3.0x1.5t)	JBISR6315
L12	Spring, OKA950D (0.6x3.0x9.5t)	JBIS06031
L13	Spring, 3.5T (0.6x3.0x3.5t)	JBISR6335
L14	Coil, Noise Filter (NF612)	JBFN612XX
L18	Spring, 2.5T (0.6x3.0x2.5t)	JBISR6325
L17	Spring, 3.5T (0.6x3.0x3.5t)	JBISR6335
L19	Inductor, Chip, 1uH (LEM2520)	JBII1UCAX
L21	Inductor, Chip, 47uH (LEM2520)	JBII47NHX
L22	Inductor, Chip, 0.1uH (LEM2520)	JBIIR1XXX
L23-24	Inductor, Chip, 47uH (LEM2520)	JBII47NHX
L26	Inductor, Chip, Inductor, 0.1uH (LEM2520)	JBIIR1XXX
L27	Inductor, Chip, 6.8uH (LAL04NA)	JBII6R8UX
	Capacitors	
C1-2	Ceramic(0805), 0.001uF, 50V, CH, +/-5%(Chip)	JCC102CJC
C3	Tantalum, Chip, 1uF, 16V(A)	JCTC01016
C4	Ceramic(0805), 0.001uF, 50V, CH +/-5%(Chip)	JCC102CJC
C6-8	Ceramic(0805), 0.001uF, 50V, CH, +/-5%(Chip)	JCC102CJC
C9	Ceramic(0805), 0.039uF, 50V, B, +/-10%(Chip)	JCC393BJC
C10	Ceramic(0805), 82P, 50V, CH, +/-5%(Chip)	JCC820CJC
C11	Ceramic(0805), 0.1uF, 50V, F, +/-10%(Chip)	JCC104FZC
C12	Ceramic(0805), 0.001uF, 50V, CH, +/-5%(Chip)	JCC102CJC
C13	Tantalum, Chip, 4.7uF, 16(A)	JCTC4R716
C14	Ceramic(0805), 0.015uF, 50V, B, +/-10%(Chip)	JCC153BKC
C15	Ceramic(0805), 0.1uF, 50V, F, +/-10%(Chip)	JCC104FZC
C16	Ceramic(0805), 0.001uF, 50V, CH, +/-5%(Chip)	JCC102CJC
C17	Ceramic(0805), 10P, 50V, CH, +/-5%(Chip)	JCC100CCC
C18	Ceramic(0805), 0.001uF, 50V, CH, +/-5%(Chip)	JCC102CJC
C19	Ceramic(0805), 0.001uF, 50V, CH, +/-5%(Chip)	JCC102CJC
C20	Ceramic(0805), 0.0022uF, 50V, B, +/-10%(Chip)	JCC223BKC
C21	Tantalum, Chip, 1uF, 16V(A)	JCTC01016
C22	Ceramic(0805), 0.01uF, 50V, B, +/-10%(Chip)	JCC103BKC
C23	Elect, 16V, 4x7, 10uF, +/-20%	JCECO10XX
C24	Ceramic(0805), 22P, 50V, CH, +/-5%(Chip)	JCC220CJC
C25	Ceramic(0805), 220P, 50V, CH, +/-5%(Chip)	JCC221CJC
C26-28	Ceramic(0805), 0.1uF, 50V, F, +/-10%(Chip)	JCC104FZC
C29	Ceramic(0805), 120P, 50V, CH, +/-5%(Chip)	JCC121CJC
C30	Ceramic(0805), 220P, 50V, CH, +/-5%(Chip)	JCC221CJC
C31	Ceramic(0805), 0.001uF, 50V, CH, +/-5%(Chip)	JCC102CJC
C32	Ceramic(0805), 22P, 50V, CH, +/-5%(Chip)	JCC220CJC

Ref. No.	Description	Mfr's Part No.
C33	Tantalum, Chip, 0.47uF, 25(A)	JCTC47100
C34	Ceramic(0805), 39P, 50V, CH, +/-5%(Chip)	JCC390CJC
C35	Elect, 6800uF, 16V, 16x31.5, +/-20%	JCECJ6800
C36	Ceramic(0805), 0.01uF, 50V, B, +/-10%(Chip)	JCC103BKC
C37	Ceramic(0805), 4P, 50V, CH, +/-0.25pF(Chip)	JCC040CJC
C38	Ceramic(0805), 0.01uF, 50V, B, +/-10%(Chip)	JCC103BKC
C39	Ceramic(0805), 4P, 50V, CH, +/-0.25%(Chip)	JCC040CJC
C40	Elect, 16V, 8x11, 330uF, +/-20%	JCECC330X
C41	Ceramic(0805), 0.001uF, 50V, CH, +/-5%(Chip)	JCC102CJC
C42	Ceramic(0805), 15P, 50V, CH, +/-5%(Chip)	JCC150CJC
C43	Ceramic(0805), 33P, 50V, CH, +/-5%(Chip)	JCC330CJC
C44	Ceramic(0805), 39P, 50V, CH, +/-5%(Chip)	JCC390CJC
C46	Ceramic(0805), 39P, 50V, CH, +/-5%(Chip)	JCC390CJC
C47-48	Ceramic(0805), 1.5P, 50V, CH, +/-0.25%(Chip)	JCC1R5CCC
C49	Ceramic(0805), 39P, 50V, CH, +/-5%(Chip)	JCC390CJC
C51-52	Ceramic(0805), 0.001uF, 50V, CH, +/-5%(Chip)	JCC102CJC
C53	Ceramic(0805), 39P, 50V, CH, +/-5%(Chip)	JCC390CJC
C54	Ceramic(0805), 0.001uF, 50V, CH, +/-5%(Chip)	JCC102CJC
C56	Ceramic(0805), 0.001uF, 50V, CH, +/-5%(Chip)	JCC102CJC
C57	Ceramic(0805), 22P, 50V, CH, +/-5%(Chip)	JCC220CJC
C58	Ceramic(0805), 0.001uF, 50V, CH, +/-5%(Chip)	JCC102CJC
C59	Ceramic(0805), 22P, 50V, CH, +/-5%(Disk)	JCC220CJD
C61	Ceramic(0805), 39P, 50V, CH, +/-5%(Disk)	JCC220CJD
C62	Ceramic(0805), 1P, 50V, CH, +/-0.25pF(Chip)	JCC010CJC
C63	Ceramic(0805), 0.001uF, 50V, CH, +/-5%(Chip)	JCC102CJC
C64	Ceramic(0805), 2P, 50V, CH, +/-0.25%(Chip)	JCC020CCC
C68-69	Ceramic, 39P, 50V, CH, +/-5%(Disk)	JCC390CJD
C71	Ceramic, 30P, 50V, CH, +/-5%(Disk)	JCC300CJD
C72-73	Ceramic(0805), 0.001uF, 50V, CH, +/-5%(Chip)	JCC102CJC
C74	Ceramic, 0.001uF, 50V, B, +/-5%(Disk)	JCC102BKD
C75	Elect, 50V, 5x11, 10uF, +/-20%	JCEFA10XX
C76	Ceramic, 51P, 50V, CH, +/-5%(Disk)	JCC150CJD
C82	Ceramic(0805), 0.001uF, 50V, CH, +/-5%(Chip)	JCC102CJC
C92	Ceramic(0805), 220P, 50V, CH, +/-5%(Chip)	JCC221CJC
C93	Ceramic(0805), 0.001uF, 50V, CH, +/-5%(Chip)	JCC102CJC
C94	Elect, 50V, 5x11, 10uF, +/-20%	JCEFA10XX
C96	Ceramic(0805), 68P, 50V, CH, +/-5%(Chip)	JCC680CJC
C97	Ceramic(0805), 47P, 50V, CH, +/-5%(Chip)	JCC470CJC
C98	Ceramic(0805), 0.001uF, 50V, CH, +/-5%(Chip)	JCC102CJC
C99	Ceramic(0805), 10P, 50V, CH, +/-5%(Chip)	JCC100CCC
C101	Ceramic(0805), 0.001uF, 50V, CH, +/-5%(Chip)	JCC102CJC
C102	Ceramic(0805), 0.01uF, 50V, B, +/-10%(Chip)	JCC103BKC
C103	Ceramic(0805), 47P, 50V, CH, +/-5%(Chip)	JCC470CJC
C104	Ceramic(0805), 0.001uF, 50V, CH, +/-5%(Chip)	JCC102CJC
C106-108	Ceramic(0805), 22P, 50V, CH, +/-5%(Chip)	JCC220CJC
C109	Ceramic(0805), 0.1uF, 50V, F, +/-5%(Chip)	JCC104FZC
C111-112	Ceramic(0805), 0.001uF, 50V, CH, +/-5%(Chip)	JCC102CJC
C113	Ceramic(0805), 1P, 50V, CK, +/-0.25pF(Chip)	JCC010CJC
C114	Ceramic(0805), 0.001uF, 50V, CH, +/-5%(Chip)	JCC102CJC
C116	Elect, 16V, 5x7, 47uF, +/-20%	JCECP47XX

Ref. No.	Description	Mfr's Part No.
C118	Ceramic(0805), 0.001uF, 50V, CH, +/-5%(Chip)	JCC102CJC
C121	Elect, 16V, 10x15, 1000uF, +/-20%	JCECM1000
C122	Ceramic(0805), 0.001uF, 50V, CH, +/-5%(Chip)	JCC102CJC
C124	Ceramic(0805), 0.001uF, 50V, CH, +/-5%(Chip)	JCC102CJC
C126	Ceramic(0805), 0.001uF, 50V, CH, +/-5%(Chip)	JCC102CJC
C127	Tantalum, Chip, 1uF, 16V(A)	JCTC01016
C128	Ceramic(0805), 0.001uF, 50V, CH, +/-5%(Chip)	JCC102CJC
C129	Tantalum, Chip, 1uF, 16V(A)	JCTC01016
C131-132	Ceramic(0805), 0.001uF, 50V, CH, +/-5%(Chip)	JCC102CJC
C133	Ceramic(0805), 0.01uF, 50V, F, +/-10%(Chip)	JCC104FZC
C137	Ceramic(0805), 0.01uF, 50V, B, +/-10%(Chip)	JCC103BKC
C138	Elect, 16V, 5x7, 47uF, +/-20%	JCECP47XX
C139	Ceramic(0805), 0.01uF, 50V, B, +/-10%(Chip)	JCC103BKC
C141	Ceramic(0805), 0.01uF, 50V, B, +/-10%(Chip)	JCC103BKC
C142	Elect, 16V, 4x7, 10uF, +/-20%	JCECO10XX
C143-144	Ceramic(0805), 0.001uF, 50V, CH, +/-5%(Chip)	JCC102CJC
C146	Ceramic(0805), 0.001uF, 50V, CH, +/-5%(Chip)	JCC102CJC
C147	Elect, 16V, 8x9, 220uF, +/-20%	JCECF220X
C148	Tantalum, Chip, 10uF, 16V(B)	JCTC10016
C149	Ceramic(0805), 0.1uF, 50V, F, +/-10%(Chip)	JCC104FZC
C151	Ceramic(0805), 0.0022uF, 50V, B, +/-10%(Chip)	JCC222CJC
C152	Tantalum, Chip, 1uF, 16V(A)	JCTC01016
C153	Elect, 16V, 8x11, 5, 470uF, +/-20%	JCECD470X
C154	Ceramic(0805), 0.001uF, 50V, CH, +/-5%(Chip)	JCC102CJC
C159	Ceramic(0805), 0.001uF, 50V, CH, +/-5%(Chip)	JCC102CJC
C161-164	Ceramic(0805), 0.001uF, 50V, CH, +/-5%(Chip)	JCC102CJC
C166	Ceramic(0805), 0.001uF, 50V, CH, +/-5%(Chip)	JCC102CJC
C602	Ceramic(0805), 0.1uF, 50V, F, +/-10%(Chip)	JCC104FZC
C603	Ceramic(0805), 0.01uF, 50V, B, +/-10%(Chip)	JCC103BKC
C604	Ceramic(0805), 33P, 50V, CH, +/-5%(Chip)	JCC330CJC
C606	Ceramic(0805), 220P, 50V, CH, +/-5%(Chip)	JCC221CJC
C607-608	Ceramic(0805), 0.1uF, 50V, F, +/-10%(Chip)	JCC104FZC
C609	Ceramic(0805), 474P, 25V, F, +80-20%(Chip)	JCC474FZC
C611	Ceramic(0805), 0.0047uF, 50V, B, +/-10%(Chip)	JCC472BJC
C612	Tantalum, Chip, 1uF, 16V(A)	JCTC01016
C613	Tantalum, Chip, 1uF, 16V(A)	JCTC01016
C616	Ceramic(0805), 0.01uF, 50V, B, +/-10%(Chip)	JCC103BKC
C617	Elect, 16V, 4x7, 10uF, +/-20%	JCECO10XX
C621	Ceramic(0805), 0.001uF, 50V, CH, +/-5%(Chip)	JCC102CJC
CT1	Trimmer, 4pie, 10pF	JCR4P10XY
	Diodes	
D1	Zener(Chip), DTZ 2.2A	JDBZU2V2C
D2	Zener(Chip), BZX5V1, MTZ5.1B	JDBZX5V1C
D3	Switching(Chip), DA204U	JDDSA204U
D4	Varicap(Chip), 1SV215	JDV1SV215
D5	Switching(Chip), 1SS355	JD1SS355C
D6-8	Varicap(Chip), 1SV215	JDV1SV215
D9	Switcihng(Chip), DA204U	JDSDA204U
D11	Pin, UM 9401	JDP9401XX

Ref. No.	Description	Mfr's Part No.
D12	Switching(Chip), S226RTK(MMBD1203)	JDS226RTX
D14	Pin, UM 9401	JDP9401XX
D16	Switching(Chip), 1SS355	JD1SS355C
D17	Switching(Chip), DAN235U	JDSDA235U
D18	Switching(Chip), DA204U	JDSDA204U
D19	Switching(Chip), 1SS355	JD1SS355C
D21	Switching(Chip), 1SS355	JD1SS355C
D22	Rectifier, 1N5401, 5402	JD1N5401X
D23	Switching(Chip), 1SS355	JD1SS355C
	Transistors	
Q1	(Chip), 2SC2412K, SMT3	JT2S2412K
Q2	(Chip), 2SC4081R(BR), UMT	JT2SC4081
Q3	(Chip), 2SC2059-K, SMT	JT2SC2059
Q4	FET(Chip), 3SK131	JF3SK131V
Q5	(Chip), 2SC2412K, SMT3	JT2S2412K
Q6	FET(Chip), 3SK131	JF3SK131V
Q9	(Chip), 2SC2954, SOT-89	JT2SC2954
Q11-12	(Chip), 2SC3356(R25)	JT2SC3356
Q14	(Chip), 2SC2412K, SMT3	JT2S2412K
Q16	(Chip), 2SA1576R, UMT3	JT2SA1576
Q17	(Chip), KRA107S, SOT-23	JTA107SXX
Q18	(Chip), 2SB1132, MPT3	JT2SB1132
Q19	(Chip), DC114EU, UMT3	JTDT114EU
Q21	(Chip), UMC5NTR, UMT5	JTLMC5TRX
Q22	(Chip), 2SA1797, MPT3	JT2S1797X
Q23	(Chip), 2SC4081R(BR), UMT3	JT2SC4081
Q24	FET(Chip), 2SK880GR	JF2SK880G
	Filter	
F1	Ceramic, LTW33-455F	JGCL455XX
FL1-L2	Crystal, 21F15B(21.4MHz)	JGX21F15B
	Integrated Circuits	
IC1	IC(Chip), TK10487MTL, FM IF Detector	JITK10487
IC2	IC(Chip), KIA7808F, Regulator	JII78L08F
IC601	IC(Chip), AK2345, CTCSS Encoder/Decoder	JIA2345XX
	Resistors	
R1	Thick Film Chip(0805), 1 Kohm, 1/8W, +/-5%	JRC001KCX
R2	Thick Film Chip(0805), 10 Kohm, 1/8W, +/-5%	JRC010KCX
R3	Thick Film Chip(0805), 1 Kohm, 1/8W, +/-5%	JRC001KCX
R4	Thick Film Chip(0805), 22 Kohm, 1/8W, +/-5%	JRC022KCX
R5	Thick Film Chip(0805), 47 Kohm, 1/8W, +/-5%	JRC047KCX
R6	Thermistor, 2 Kohm	JRC002KCX
R7	Thick Film Chip(0805), 10 Kohm, 1/8W, +/-5%	JRC010KCX
R8	Thick Film Chip(0805), 22 Kohm, 1/8W, +/-5%	JRC022KCX
R9	Thick Film Chip(0805), 2.2 Kohm, 1/8W, +/-5%	JRC2R2KCX
R10	Thick Film Chip(0805), 220 Kohm, 1/8W, +/-5%	JRC220HCX
R11	Thick Film Chip(0805), 1 Kohm, 1/8W, +/-5%	JRC001KCX

Ref. No.	Description	Mfr's Part No.
D12	Switching(Chip), S226RTK(MMBD1203)	JDS226RTX
D14	Pin, UM 9401	JDP9401XX
D16	Switching(Chip), 1SS355	JD1SS355C
D17	Switching(Chip), DAN235U	JDSDA235U
D18	Switching(Chip), DA204U	JDSDA204U
D19	Switching(Chip), 1SS355	JD1SS355C
D21	Switching(Chip), 1SS355	JD1SS355C
D22	Rectifier, 1N5401, 5402	JD1N5401X
D23	Switching(Chip), 1SS355	JD1SS355C
	Transistors	
Q1	(Chip), 2SC2412K, SMT3	JT2S2412K
Q2	(Chip), 2SC4081R(BR), UMT	JT2SC4081
Q3	(Chip), 2SC2059-K, SMT	JT2SC2059
Q4	FET(Chip), 3SK131	JF3SK131V
Q5	(Chip), 2SC2412K, SMT3	JT2S2412K
Q6	FET(Chip), 3SK131	JF3SK131V
Q9	(Chip), 2SC2954, SOT-89	JT2SC2954
Q11-12	(Chip), 2SC3356(R25)	JT2SC3356
Q14	(Chip), 2SC2412K, SMT3	JT2S2412K
Q16	(Chip), 2SA1576R, UMT3	JT2SA1576
Q17	(Chip), KRA107S, SOT-23	JTA107SXX
Q18	(Chip), 2SB1132, MPT3	JT2SB1132
Q19	(Chip), DC114EU, UMT3	JTDT114EU
Q21	(Chip), UMC5NTR, UMT5	JTLMC5TRX
Q22	(Chip), 2SA1797, MPT3	JT2S1797X
Q23	(Chip), 2SC4081R(BR), UMT3	JT2SC4081
Q24	FET(Chip), 2SK880GR	JF2SK880G
	Filter	
F1	Ceramic, LTW33-455F	JGCL455XX
FL1-L2	Crystal, 21F15B(21.4MHz)	JGX21F15B
	Integrated Circuits	
IC1	IC(Chip), TK10487MTL, FM IF Detector	JITK10487
IC2	IC(Chip), KIA7808F, Regulator	JII78L08F
IC601	IC(Chip), AK2345, CTCSS Encoder/Decoder	JIA2345XX
	Resistors	
R1	Thick Film Chip(0805), 1 Kohm, 1/8W, +/-5%	JRC001KCX
R2	Thick Film Chip(0805), 10 Kohm, 1/8W, +/-5%	JRC010KCX
R3	Thick Film Chip(0805), 1 Kohm, 1/8W, +/-5%	JRC001KCX
R4	Thick Film Chip(0805), 22 Kohm, 1/8W, +/-5%	JRC022KCX
R5	Thick Film Chip(0805), 47 Kohm, 1/8W, +/-5%	JRC047KCX
R6	Thermistor, 2 Kohm	JRC002KCX
R7	Thick Film Chip(0805), 10 Kohm, 1/8W, +/-5%	JRC010KCX
R8	Thick Film Chip(0805), 22 Kohm, 1/8W, +/-5%	JRC022KCX
R9	Thick Film Chip(0805), 2.2 Kohm, 1/8W, +/-5%	JRC2R2KCX
R10	Thick Film Chip(0805), 220 Kohm, 1/8W, +/-5%	JRC220HCX
R11	Thick Film Chip(0805), 1 Kohm, 1/8W, +/-5%	JRC001KCX

Ref. No.	Description	Mfr's Part No.
R12	Thick Film Chip(0805), 10 Kohm, 1/8W, +/-5%	JRC010KCX
R13	Thick Film Chip(0805), 220 Kohm, 1/8W, +/-5%	JRC220HCX
R14	Thick Film Chip(0805), 100 Kohm, 1/8W, +/-5%	JRC100HCX
R15	Thick Film Chip(0805), 10 Kohm, 1/8W, +/-5%	JRC010KCX
R16	Thick Film Chip(0805), 4.7 Kohm, 1/8W, +/-5%	JRC4R7KCX
R17	Thick Film Chip(0805), 560 Kohm, 1/8W, +/-5%	JRC560KCX
R18	Thick Film Chip(0805), 10 Kohm, 1/8W, +/-5%	JRC010KCX
R19	Thick Film Chip(0805), 22 Kohm, 1/8W, +/-5%	JRC022KCX
R21	Thick Film Chip(0805), 560 Kohm, 1/8W, +/-5%	JRC560KCX
R22	Thick Film Chip(0805), 3.3 Kohm, 1/8W, +/-5%	JRC3R3KCX
R23	Thick Film Chip(0805), 1 Kohm, 1/8W, +/-5%	JRC001KCX
R24	Thick Film Chip(0805), 560 Kohm, 1/8W, +/-5%	JRC560KCX
R26	Thick Film Chip(0805), 2.2 Kohm, 1/8W, +/-5%	JRC2R2KCX
R27	Thick Film Chip(0805), 1 Kohm, 1/8W, +/-5%	JRC001KCX
R28	Thick Film Chip(0805), 100 Kohm, 1/8W, +/-5%	JRC100HCX
R29	Thick Film Chip(0805), 10 Kohm, 1/8W, +/-5%	JRC010KCX
R31	Thick Film Chip(0805), 22 Kohm, 1/8W, +/-5%	JRC022HCX
R32	Thick Film Chip(0805), 10 Kohm, 1/8W, +/-5%	JRC010KCX
R33	Thick Film Chip(0805), 15 Kohm, 1/8W, +/-5%	JRC015KCX
R34	Thick Film Chip(0805), 10 Kohm, 1/8W, +/-5%	JRC010KCX
R36	Thick Film Chip(0805), 15 Kohm, 1/8W, +/-5%	JRC015KCX
R37	Thick Film Chip(0805), 15 Kohm, 1/8W, +/-5%	JRC015KCX
R38	Thick Film Chip(0805), 100 Kohm, 1/8W, +/-5%	JRC100HCX
R39	Thick Film Chip(0805), 12 Kohm, 1/8W, +/-5%	JRC012KCX
R41	Thick Film Chip(0805), 47 Kohm, 1/8W, +/-5%	JRC047KCX
R42	Thick Film Chip(0805), 10 Kohm, 1/8W, +/-5%	JRC010KCX
R43	Thick Film Chip(0805), 15 Kohm, 1/8W, +/-5%	JRC015KCX
R44	Thick Film Chip(0805), 100 Kohm, 1/8W, +/-5%	JRC100KCX
R46	Thick Film Chip(0805), 27 Kohm, 1/8W, +/-5%	JRC270KCX
R48	Thick Film Chip(0805), 150 ohm, 1/2W, +/-5%	JRI150HCX
R51	Thick Film Chip(0805), 100 ohm, 1/8W, +/-5%	JRC100HCX
R52	Thick Film Chip(0805), 10 ohm, 1/8W, +/-5%	JRC010HCX
R53	Thick Film Chip(0805), 470 ohm, 1/8W, +/-5%	JRC470HCX
R54	Thick Film Chip(0805), 2.7 Kohm, 1/8W, +/-5%	JRC2R7KCX
R56	Thick Film Chip(0805), 47 ohm, 1/8W, +/-5%	JRC047HCX
R57	Thick Film Chip(0805), 10 ohm, 1/8W, +/-5%	JRC010HCX
R58	Thick Film Chip(0805), 1 Kohm, 1/8W, +/-5%	JRC001KCX
R59	Thick Film Chip(0805), 3.9 Kohm, 1/8W, +/-5%	JRC3R9KCX
R61	Thick Film Chip(0805), 1 Kohm, 1/8W, +/-5%	JRC001KCX
R62	Thick Film Chip(0805), 22 Kohm, 1/8W, +/-5%	JRC022HCX
R63	Thick Film Chip(0805), 100 Kohm, 1/8W, +/-5%	JRC100HCX
R64	Thick Film Chip(0805), 1 Kohm, 1/8W, +/-5%	JRC001KCX
R66	Thick Film Chip(0805), 3.9 Kohm, 1/8W, +/-5%	JRC3R9KCX
R67	Thick Film Chip(0805), 100 ohm, 1/8W, +/-5%	JRC100HCX
R68	Thick Film Chip(0805), 22 Kohm, 1/2W, +/-5%	JRI022HCX
R69	Thick Film Chip(0805), 470 ohm, 1/2W, +/-5%	JRI470HCX
R70	Thick Film Chip(0805), 4.7 Kohm, 1/8W, +/-5%	JRC4R7KCX
R71	Thick Film Chip(0805), 10 Kohm, 1/8W, +/-5%	JRC010KCX
R72	Thick Film Chip(0805), 10 Kohm, 1/8W, +/-5%	JRC010KCX
R73	Thick Film Chip(0805), 3.3 Kohm, 1/8W, +/-5%	JRC3R3KCX

Ref. No	Description	Mfr's Part No.
R74	Thick Film Chip(0805), 18 Kohm, 1/8W, +/-5%	JRC018KCX
R76	Thick Film Chip(0805), 4.7 Kohm, 1/8W, +/-5%	JRC4R7KCX
R77	Thick Film Chip(0805), 22 Kohm, 1/8W, +/-5%	JRC022KCX
R78	Thick Film Chip(0805), 1 Kohm, 1/8W, +/-5%	JRC001KCX
R79	Thick Film Chip(0805), 1.8 Kohm, 1/8W, +/-5%	JRC1R8KCX
R80	Thick Film Chip(0805), 10 Kohm, 1/8W, +/-5%	JRC010KCX
R81	Thick Film Chip(0805), 10 Kohm, 1/8W, +/-5%	JRC010KCX
R83	Thick Film Chip(0805), 100 Kohm, 1/8W, +/-5%	JRC100KCX
R84	Thick Film Chip(0805), 470 ohm, 1/8W, +/-5%	JRC470HCX
R85	Thick Film Chip(0805), 0 Kohm, 1/8W, +/-5%	JRC000HCX
R86	Thick Film Chip(0805), 2.2 Kohm, 1/8W, +/-5%	JRC2R2KCX
R87	Thick Film Chip(0805), 10 Kohm, 1/8W, +/-5%	JRC010KCX
R88	Thick Film Chip(0805), 470 ohm, 1/8W, +/-5%	JRC470HCX
R89	Thick Film Chip(0805), 10 Kohm, 1/8W, +/-5%	JRC010KCX
R91	Thick Film Chip(0805), 220 Kohm, 1/8W, +/-5%	JRC220HCX
R92	Thick Film Chip(0805), 1 Kohm, 1/8W, +/-5%	JRC001KCX
R93	Thick Film Chip(0805), 100 Kohm, 1/8W, +/-5%	JRC100KCX
R94	Thick Film Chip(0805), 10 ohm, 1/8W, +/-5%	JRC010KCX
R97	Thick Film Chip(0805), 10 ohm, 1/8W, +/-5%	JRC010HCX
R99	Thick Film Chip(0805), 120 Kohm, 1/8W, +/-5%	JRC120KCX
R101	Thick Film Chip(0805), 2.2 ohm, 1/8W, +/-5%	JRC2R2HCX
R102	Thick Film Chip(0805), 1.8 Kohm, 1/8W, +/-5%	JRC1R8KCX
R103	Thick Film Chip(0805), 2.2 ohm, 1/8W, +/-5%	JRC2R2HCX
R104	Thick Film Chip(0805), 1 Kohm, 1/8W, +/-5%	JRC001KCX
R106	Thick Film Chip(0805), 1 Kohm, 1/8W, +/-5%	JRC001KCX
R107	Thick Film Chip(0805), 3.3 Kohm, 1/8W, +/-5%	JRC3R3KCX
R120	Thick Film Chip(0805), 0 ohm, 1/8W, +/-5%	JRC000HCX
R601	Thick Film Chip(0805), 330 Kohm, 1/8W, +/-5%	JRC330KCX
R602	Thick Film Chip(0805), 2.2 Kohm, 1/8W, +/-5%	JRC2R2KCX
R603	Thick Film Chip(0805), 2.2 Kohm, 1/8W, +/-5%	JRC2R2KCX
R604	Thick Film Chip(0805), 56 Kohm, 1/8W, +/-5%	JRC056KCX
R606	Thick Film Chip(0805), 1 Mohm, 1/8W, +/-5%	JRC001MCX
R607	Thick Film Chip(0805), 680 ohm, 1/8W, +/-5%	JRC680HCX
R608	Thick Film Chip(0805), 470 Kohm, 1/8W, +/-5%	JRC470KCX
R611	Thick Film Chip(0805), 10 Kohm, 1/8W, +/-5%	JRC010KCX
R613	Thick Film Chip(0805), 56 Kohm, 1/8W, +/-5%	JRC056KCX
R614	Thick Film Chip(0805), 3.9 Kohm, 1/8W, +/-5%	JRC3R9KCX
R616	Thick Film Chip(0805), 150 Kohm, 1/8W, +/-5%	JRC150KCX
R617	Thick Film Chip(0805), 5.6 Kohm, 1/8W, +/-5%	JRC5R6KCX
R618	Thick Film Chip(0805), 3.9 Kohm, 1/8W, +/-5%	JRC3R9KCX
R619	Thick Film Chip(0805), 15 Kohm, 1/8W, +/-5%	JRC015KCX
R621	Thick Film Chip(0805), 22 Kohm, 1/8W, +/-5%	JRC022KCX
R630	Thick Film Chip(0805), 1 Mohm, 1/8W, +/-5%	JRC001MCX
CH2	Thermistor, 6.8 Kohm	JZT006KCX
	Semifixed Resistors	
RV1-3	50KB 6H 3P	JU50KB6H3
RV4	5KB 6H 3P	JU05KB6H3
RV6	50KB 6H 3P	JU50KB6H3

Ref. No.	Description	Mfr's Part No.
	X-TALS	
X1 X2 X3	Resonator, Ceramic, ZTB 455ET 4C (HC-49/S), 20.945MHz, 20pF, 10PPM (UM-5), 10.475MHz 20pF 5PPM	JXCR455KX JX20945XS JX10475XB
	Jack	
EXT	Earphone Jack, JY3509-01-010(3.5pie)	JZJEJ3509
	Wires	
11 11-1 ANT1	General Wire, 0.16/7 2-7 Black 100 General Wire, 0.16/7 2-7 Brown 100 Hirap Braid Wire, AWG (1Cm)	GWGA3L100 GWGA3W100 GNYWHAW24
	End of ASS'Y-PCB, Main	
P2	ASS'Y-PCB, VCO	GPSVC0008
	Coils	
T701 L701 L704 L705 L706 L707 L708	IFT,71-U, 5.5mm Inductor, Chip, 10uH(LEM2520) Inductor, Chip, 1uH(LEM2520) Inductor, Chip, 2.7uH(LEM2520) Inductor, Chip, 3.3uH(LEM2520) Inductor, Chip, 18uH(LEM2520) Inductor, Chip, 10uH(LEM2520)	JA71XUXXX JBII10XCX JBII1UCAX JBII2R7CX JBII3R3CX JBII18NXX JBII10XCX
	Capacitors	
C701 C702 C703 C704 C705 C706 C707 C708 C709 C710 C722 C712 C713-715 C717 C718 C719 C720 C721 C723 C724 C725 C726	Tantalum, Chip, 1uF 16V(A) Ceramic(1608), 0.01uF, 50V, B, +/-10%(Chip) Tantalum, Chip, 4.7uF 16V(A) Tantalum, Chip, 4.7uF 16V(A) Ceramic(1608), 0.001uF, 50V, B, +/-10%(Chip) Tantalum, Chip, 0.1uF 16V(A) Ceramic(1608), 0.01uF, 50V, B, +/-10%(Chip) Ceramic(1608), 1P, 50V, CG, +/-0.25pF(Chip) Ceramic(1608), 0.001uF, 50V, B, +/-10%(Chip) Ceramic(1608), 0.1uF, 50V, B, +/-10%(Chip) Ceramic(1608), 18P, 50V, CH, +/-5%(Chip) Ceramic(1608), 1P, 50V, CG, +/-0.25pF(Chip) Ceramic(1608), 0.001uF, 50V, B, +/-10%(Chip) Ceramic(1608), 0.01uF, 50V, B, +/-10%(Chip) Ceramic(1608), 0.001uF, 50V, B, +/-10%(Chip) Ceramic(1608), 1P, 50V, CG, +/-0.25pF(Chip) Ceramic(1608), 0.001uF, 50V, B, +/-10%(Chip) Ceramic(1608), 1P, 50V, CG, +/-0.25pF(Chip) Ceramic(1608), 33P, 50V, CG, +/-5%(Chip) Ceramic(1608), 0.01uF, 50V, B, +/-10%(Chip) Ceramic(1608), 2P, 50V, CG, +/-0.25pF(Chip) Tantalum, Chip, 10uF 6.3V(A)	JCTC01016 JCH103BKC JCTC4R716 JCTC0125A JCH102BKC JCTC0125A JCH103BKC JCH010CCC JCH102BKC JCH104BKC JCC180CJC JCH010CCC JCH102BKC JCH103BKC JCH102BKC JCH010CCC JCH102BKC JCH010CCC JCH330CJC JCH103BKC JCH020CCC JCTC10063

Ref. No.	Description	Mfr's Part No.
C727-728	Ceramic(1608), 0.01uF, 50V, B, +/-10%(Chip)	JCH103BKC
C729	Tantalum, Chip, 10uF 6.3V(A)	JCTC10063
C734	Ceramic(1608), 10P, 50V, CG, +/-5%(Chip)	JCH100CCC
C731-732	Ceramic(1608), 0.001uF, 50V, B, +/-10%(Chip)	JCH102BKC
C741	Ceramic(1608), 0.001uF, 50V, B, +/-10%(Chip)	JCH102BKC
C730	Ceramic(1608), 0.1uF, 50V, B, +/-10%(Chip)	JCH104BKC
	Diode	
D702-704	Diode, Varricap, Chip, KDV251S, SOT-23	JDKDV251S
	Integrated Circuit	
IC701	IC, LV2105, PLL	JILV2105X
	Resisters	
R701	Thick Film Chip(1608), 12 Kohm, 1/10W, +/-5%	JRH012KCX
R702	Thick Film Chip(1608), 10 Kohm, 1/10W, +/-5%	JRH010KCX
R703	Thick Film Chip(1608), 12 Kohm, 1/10W, +/-5%	JRH012KCX
R704	Thick Film Chip(1608), 10 Kohm, 1/10W, +/-5%	JRH010KCX
R705	Thick Film Chip(1608), 100 Kohm, 1/10W, +/-5%	JRH100HCX
R706	Thick Film Chip(1608), 560 Kohm, 1/10W, +/-5%	JRH560HCX
R707	Thick Film Chip(1608), 1 Mohm, 1/10W, +/-5%	JRH001MCX
R708	Thick Film Chip(1608), 47 ohm, 1/10W, +/-5%	JRH047HCX
R709	Thick Film Chip(1608), 4.7 ohm, 1/10W, +/-5%	JRH4R7KCX
R710	Thick Film Chip(1608), 56 Kohm, 1/10W, +/-5%	JRH056HCX
R711	Thick Film Chip(1608), 22 Kohm, 1/10W, +/-5%	JRH022KCX
R713	Thick Film Chip(1608), 220 ohm, 1/10W, +/-5%	JRH220HCX
R714	Thick Film Chip(1608), 390 ohm, 1/10W, +/-5%	JRH390HCX
R715	Thick Film Chip(1608), 22 Kohm, 1/10W, +/-5%	JRH022KCX
R716	Thick Film Chip(1608), 470 ohm, 1/10W, +/-5%	JRH470HCX
R717	Thick Film Chip(1608), 390 Kohm, 1/10W, +/-5%	JRH390KCX
R718	Thick Film Chip(1608), 100 Kohm, 1/10W, +/-5%	JRH100KCX
R719	Thick Film Chip(1608), 220 Kohm, 1/10W, +/-5%	JRH220KCX
R720	Thick Film Chip(1608), 1 Kohm, 1/10W, +/-5%	JRH001KCX
R721	Thick Film Chip(1608), 220 ohm, 1/10W, +/-5%	JRH220HCX
R722	Thick Film Chip(1608), 1.5 Kohm, 1/10W, +/-5%	JRH1R5KCX
R723	Thick Film Chip(1608), 1 Kohm, 1/10W, +/-5%	JRH001KCX
R724	Thick Film Chip(1608), 4.7 Kohm, 1/10W, +/-5%	JRH4R7KCX
R725	Thick Film Chip(1608), 10 Kohm, 1/10W, +/-5%	JRH010KCX
R726	Thick Film Chip(1608), 22 ohm, 1/10W, +/-5%	JRH022HCX
R727	Thick Film Chip(1608), 10 Kohm, 1/10W, +/-5%	JRH010KCX
R728	Thick Film Chip(1608), 470 ohm, 1/10W, +/-5%	JRH470HCX
R729	Thick Film Chip(1608), 3.3 Kohm, 1/10W, +/-5%	JRH3R3KCX
R730	Thick Film Chip(1608), 10 Kohm, 1/10W, +/-5%	JRH010KCX
R735	Thick Film Chip(1608), 220 Kohm, 1/10W, +/-5%	JRH220KCX
R740	Thick Film Chip(1608), 4.7 Mohm, 1/10W, +/-5%	JRH4R7MCX
R741	Thick Film Chip(1608), 8.2 Mohm, 1/10W, +/-5%	JRH8R2MCX
R745	Thick Film Chip(1608), 100 ohm, 1/10W, +/-5%	JRH100HCX
R746	Thick Film Chip(1608), 4.7 Kohm, 1/10W, +/-5%	JRH4R7KCX

Ref. No	Description	Mfr's Part
	Transistors	
Q701	(Chip), KTA1505SY, SOT-23	JTA1505SY
Q702	(Chip), KTC3876SY(WY), SOT-23	JTC3876SY
Q703	(Chip), KTC3882, SOT-23	JTC3882SX
Q704	(Chip), 2SC3356(R25)	JT2SC3356
Q706	(Chip), KTC3882, SOT-23	JTC3882SX
Q707	(Chip), KRC114SRTK, SOT-23	JTC114SRT
Q711	(Chip), KTC3875Y, SOT-23	JTC3875YX
	Wafers	
8	Flat Wafer 6P 2mm(F200M 6SS 2)	GWCF062XX
9	Flat Wafer 9P 2mm(F200M 9SS 2)	GWCF092XX
P3	ASS'Y-PCB, FRONT	JPFXX0181
	Coils	
L201	Inductor, Chip, 4.7uH(LEM2520)	JBII4R7CB
L202	Inductor, Chip, 0.1uH(LEM2520)	JBIIR1XXX
L206-209	Inductor, Chip, 0.1uH(LEM2520)	JBIIR1XXX
L211	Inductor, Chip, 0.1uH(LEM2520)	JBIIR1XXX
	Capacitors	
C201	Ceramic(1608), 0.022uF, 50V, B, +/-10%(Chip)	JCH223BKC
C202	Ceramic(1608), 22P, 50V, CG, +/-5%(Chip)	JCH220CJC
C203	Ceramic(1608), 20P, 50V, CG, +/-5%(Chip)	JCH200CJC
C204	Tantalum, Chip, 1uF 16V(A)	JCJC01016
C206	Ceramic(1608), 0.01uF, 50V, B, +/-10%(Chip)	JCH103BKC
C207	Tantalum, Chip, 0.1uF 16V(A)	JCTC0125A
C208	Ceramic(1608), 0.001uF, 50V, B, +/-10%(Chip)	JCH102BKC
C209	Ceramic(1608), 0.022uF, 50V, B, +/-10%(Chip)	JCH223BKC
C211	Ceramic(1608), 470P, 50V, B, +/-10%(Chip)	JCH471BKC
C212	Ceramic(1608), 0.001uF, 50V, B, +/-10%(Chip)	JCH102BKC
C213	Elect, 10V, 5x7, 47uF	JCEBA47XX
C214	Ceramic(1608), 0.01uF, 50V, B, +/-10%(Chip)	JCH103BKC
C216-217	Ceramic(1608), 0.01uF, 50V, B, +/-10%(Chip)	JCH103BKC
C218-219	Tantalum, Chip, 47uF 16V(D)	JCTC47016
C221	Ceramic(1608), 0.01uF, 50V, B, +/-10%(Chip)	JCH103BKC
C222	Tantalum, Chip, 10uF 16V(B)	JCTC10016
C223	Ceramic(1608), 0.001uF, 50V, B, +/-10%(Chip)	JCH102BKC
C224	Ceramic(1608), 0.01uF, 50V, B, +/-10%(Chip)	JCH103BKC
C226	Ceramic(1608), 0.001uF, 50V, B, +/-10%(Chip)	JCH102BKC
C227	Tantalum, Chip, 0.47uF 25V(A)	JCTC47100
C228	Ceramic(1608), 0.001uF, 50V, B, +/-10%(Chip)	JCH102BKC
C229	Ceramic(1608), 0.1uF, 50V, B, +/-10%(Chip)	JCH104BKC
C233-234	Ceramic(1608), 0.001uF, 50V, B, +/-10%(Chip)	JCH102BKC
C236	Ceramic(1608), 0.001uF, 50V, B, +/-10%(Chip)	JCH102BKC
C237-238	Ceramic(1608), 100P, 50V, CG, +/-5%(Chip)	JCH101CJC
C239-240	Ceramic(1608), 0.001uF, 50V, B, +/-10%(Chip)	JCH102BKC
C243-246	Ceramic(1608), 0.001uF, 50V, B, +/-10%(Chip)	JCH102BKC

Ref. No.	Description	Mfr's Part No.
	Diodes	
D201-203	Switching(Chip), ISS355	JD1SS355C
D204	Switching(Chip), S181RTK(MMBD1205)	JDS181RTK
D206	Zener(Chip), BZX84C10	JDBZX10V0
D211-214	Switching(Chip), ISS355	JD1SS355C
	Integrated Circuits	
IC201	IC(Chip), 24C02, EPROM	JI24C02XX
IC202	IC(Chip), KIA704F, Reset	JII7042FX
IC203	IC(Chip), KIA78L05F, Regulator	JII78L05F
IC204	IC, SY-252, KS57C2408, CPU	JISY252XX
	Volumes	
VR201	Volume, Single Round, A50K, w/nut, Washer	JVR050KAV
VR202	Volume, Single Round, B10K, w/nut, Washer	JVR010KBV
	LCD	
T1	LCD, KXN31931DAP	JLCK31931
	Resistors	
R201-203	Thick Film Chip(1608), 10 Kohm, 1/10W, +/-5%	JRH010KCX
R204	Thick Film Chip(1608), 470 Kohm, 1/10W, +/-5%	JRH470KCX
R205	Thick Film Chip(1608), 10 Kohm, 1/10W, +/-5%	JRH010KCX
R206-207	Thick Film Chip(1608), 1 Mohm, 1/10W, +/-5%	JRH001MCX
R208	Thick Film Chip(1608), 470 Kohm, 1/10W, +/-5%	JRH470KCX
R209	Thick Film Chip(1608), 10 Kohm, 1/10W, +/-5%	JRH010KCX
R211-213	Thick Film Chip(1608), 1 Mohm, 1/10W, +/-5%	JRH001MCX
R214	Thick Film Chip(1608), 2.2 Kohm, 1/10W, +/-5%	JRH2R2KCX
R216-218	Thick Film Chip(1608), 10 Kohm, 1/10W, +/-5%	JRH010KCX
R219	Thick Film Chip(1608), 1 Mohm, 1/10W, +/-5%	JRH001MCX
R221	Thick Film Chip(1608), 10 Kohm, 1/10W, +/-5%	JRH010KCX
R222	Thick Film Chip(1608), 1 Mohm, 1/10W, +/-5%	JRH001MCX
R223	Thick Film Chip(1608), 100 Kohm, 1/10W, +/-5%	JRH100KCX
R224	Thick Film Chip(1608), 0 ohm, 1/10W, +/-5%	JRH000HCX
R226	Thick Film Chip(1608), 120 Kohm, 1/10W, +/-5%	JRH120KCX
R227	Thick Film Chip(1608), 180 Kohm, 1/10W, +/-5%	JRH180KCX
R228	Thick Film Chip(1608), 820 Kohm, 1/10W, +/-5%	JRH820KCX
R233	Thick Film Chip(1608), 10 Kohm, 1/10W, +/-5%	JRH010KCX
R234	Thick Film Chip(1608), 4.7 Kohm, 1/10W, +/-5%	JRH4R7KCX
R251-252	Thick Film Chip(1608), 10 Kohm, 1/10W, +/-5%	JRH010KCX
R229	Thick Film Chip(1608), 22 Kohm, 1/10W, +/-5%	JRH022KCX
R236	Thick Film Chip(1608), 39 Kohm, 1/10W, +/-5%	JRH039KCX
R239	Thick Film Chip(1608), 47 Kohm, 1/10W, +/-5%	JRH047HCX
R231-232	Thick Film Chip(1608), 47 Kohm, 1/10W, +/-5%	JRH047KCX
R237-238	Thick Film Chip(1608), 47 Kohm, 1/10W, +/-5%	JRH047KCX
R241	Thick Film Chip(1608), 2.2 Kohm, 1/10W, +/-5%	JRH2R2KCX
R242	Thick Film Chip(1608), 4.7 Kohm, 1/10W, +/-5%	JRH147KCX
R247	Thick Film Chip(1608), 100 Kohm, 1/10W, +/-5%	JRH100KCX

Ref. No.	Description	Mfr's Part No.
R248	Thick Film Chip(1608), 2.2 Kohm, 1/10W, +/-5%	JRH2R2KCX
R253	Thick Film Chip(1608), 100 Kohm, 1/10W, +/-5%	JRH100KCX
R254	Thick Film Chip(1608), 120 Kohm, 1/10W, +/-5%	JRH120KCX
R256	Thick Film Chip(1608), 220 ohm, 1/10W, +/-5%	JRH220HCX
R281-299	Thick Film Chip(1608), 100 Kohm, 1/10W, +/-5%	JRH100KCX
CON204	Thick Film Chip(1608), 0 ohm, 1/10W, +/-5%	JRH000HCX
P21	Thick Film Chip(1608), 0 ohm, 1/10W, +/-5%	JRH000HCX
	Transistors	
Q201	(Chip), KRA101S, SOT-23	JTA101SXX
Q202	(Chip), KTC4375, SOT-89	JT2SC4375
Q203	(Chip), KRA101S, SOT-23	JTA101SXX
Q206-208	(Chip), KTC3875Y, SOT-23	JTC3875YX
	X-TAL	
X201	(HC-49/S), 4.19430MHz 18pF 20PPM	JX041943X
P4	ASS'Y-PCB, Channel	JPDCX0120
SW207	Switch, Channel, YPS2101 15SK(15mm), w/nut, Washer	JSC2101YX
	Pilot Lamp	
PL201-202	Pilot Lamp, 3pie 60mA 10V	JL3P10VXX
	End of ASS'Y-PCB Front	
	ASS'Y-HEAT Sink	JPWXX0268
P5	ASS'Y-PCB, Power Module	JPMPX0268
	Coil	
L801	Inductor, 2.2uH(LAL04NA)	JBII2R2UX
	Resistor	
R49	Metal Resistor(With Bead core Bfo3) 68 ohm 1W(ST)	JR0068HDS
	Transistors	
Q7	2SC 1946A	JT2S1946A
Q8	2SC 1971	JT2S1971X
	Capacitors	
C801-804	Ceramic(0805), 0.001uF, 50V, CH, +/-5%(Chip)	JCC102CJC
C805-808	Ceramic(0805), 15P, 50V, CH, +/-5%(Chip)	JCC151CJC
C809-812	Ceramic(0805), 180P, 50V, CH, +/-5%(Chip)	JCC181CJC
C813-816	Ceramic(0805), 27P, 50V, CH, +/-5%(Chip)	JCC270CJC
C817-820	Ceramic(0805), 68P, 50V, CH, +/-5%(Chip)	JCC680CJC
C821-824	Ceramic(0805), 47P, 50V, CH, +/-5%(Chip)	JCC470CJC

Ref. No	Description	Mfr's Part No.
	Connector	
28	CH-239(Sin) w/terminal LUG	GNCAC239X
	End of ASS'Y-PCB, Power Module	
	End of ASS'Y-HEAT Sink	
	ASS'Y-MICROPHONE	JMHTX252X
	Capacitors	
C301-302	Ceramic(1608), 0.1uF, 50V, B, +/-10%(Chip)	JCH104BKC
C303	Ceramic(1608), 0.001uF, 50V, B, +/-10%(Chip)	JCH102BKC
C304	Tantalum, Chip, 2.2uF 16V(A)	JCTC2R216
C306-307	Ceramic(1608), 20P, 50V, CG, +/-5%(Chip)	JCH200CJC
C311	Ceramic(1608), 0.01uF, 50V, B, +/-10%(Chip)	JCH103BKC
C313	Tantalum, Chip, 22uF 16V(B2)	JCTC22026
C315	Tantalum, Chip, 22uF 16V(B2)	JCTC22026
C349	Tantalum, Chip, 47uF 16V(D)	JCTC47016
	Intergrated Circuit	
IC301	IC, LC7365N, DTMF	JILC7365X
	Crystal	
X301	(HC-49/S), 3.579545MHz, 30pF, 50PPM	JX0358XXX
	Diode	
D301-303	Switching, Chip, 1SS355	JD1SS355C
	Resistors	
R301	Thick Film Chip(1608), 100 Kohm, 1/10W, +/-5%	JRH100KCX
R302-304	Thick Film Chip(1608), 2.2 Kohm, 1/10W, +/-5%	JRH2R2KCX
R306	Thick Film Chip(1608), 330 ohm, 1/10W, +/-5%	JRH330HCX
R309	Thick Film Chip(1608), 2.2 Kohm, 1/10W, +/-5%	JRH2R2KCX
R311	Thick Film Chip(1608), 1 Kohm, 1/10W, +/-5%	JRH001KCX
	Switchs	
SW306-308	Tact Switch, GT-1102U	JST1102UX
SW309	Slide Switch, GS2206A	JSS2206AX
	Transistor	
Q301-302	(Chip), KRC104SRTX, SOT-23	JTC104SRT
	Semifixed Resistor	
VR301	(Chip), MVR32 HXBRN103	JU103MVRX
	End of ASS'Y-MICROPHONE	

VOLTAGE CHART

Measurement Conditions:

Power supply voltage : 13.8V DC
Test equipment : Digital Voltmeter (HC-3500T)
Measurement channel : 146.520MHz
Unless otherwise specified, set controls are as follows:
Channel : 146.520MHz SQ : Min Volume : Max

Symbol No.	Name	RX / TX		Base Gate	Collector Drain	Emitter Source
Q1	2SC2412K	RX	No SQ	0	SIGNAL	GND
		RX	SQ	0.66		
Q2	2SC4081R(BR)	RX	No SQ	0.62	3.38	GND
		RX	SQ	0.54	3.69	
Q3	2SC2059	RX		0.71	6.49	GND
Q4	3SK131	RX	GATE 1	0.01	7.80	0.03
			GATE 2	0.03		
Q5	2SC2412K	RX	No SQ	0	SIGNAL	GND
			SQ	0.66		
Q6	3SK131	RX	GATE 1	0	6.54	0.12
			GATE 2	6.13		
Q7	2SC1946A	TX		0.66	13.80	GND
Q8	2SC1971	TX		0.06	12.00	GND
Q9	2SC2954	TX		0.26	11.58	0.84
Q11	2SC3356	TX		1.09	6.06	0.38
Q12	2SC3356	RX TX		1.40	7.00	0.68
Q13	2SB1292F	TX ON		12.92	12.50	13.80
		TX OFF		13.76	0	13.80
Q14	2SC2412K	TX		0.66	11.59	GND

Symbol No.	Name	RX / TX		Base Gate	Collector Drain	Emitter Source
Q16	2SA1576R	TX		2.93	0.82	3.27
Q17	KRA107S	TX	LOW	0.06	GND	0.88
			HIGH	3.33	GND	3.28
Q18	2SB1132	TX		7.19	7.83	7.89
Q19	DTC114EU	TX		4.52	0.10	GND

Symbol No.	Name	RX / TX	PIN NO	1	2	3	4	5
Q21	UMC5NTR	RX TX	RX	GND	4.78	7.48	7.71	0.04
			TX	GND	0.10	7.84	0	7.87

Symbol No.	Name	RX / TX	Base Gate	Collector Drain	Emitter Source
Q22	2SA1797	RX TX	13.04	13.74	3.80
Q23	2SC4081	RX TX	0.71	0.14	GND
Q24	2SK880	RX	1.63	7.80	2.11
Q701	KTA1505SY	RX TX	5.55	1.79	5.55
Q702	KTC3876SY	RX TX	0.01	1.79	GND
Q703	KTC3882	RX TX	3.00	4.90	3.00
Q704	2SC3356	RX TX	0.27	4.85	GND
Q706	KTC3882	RX TX	0.13	7.83	0.04
Q707	KRC114SRTK	RX	4.05	0.02	GND
		TX	0.10	1.50	GND
Q711	KTC3875	RX	0	5.40	GND
		TX	0.60	0	GND
Q201	KRA101S	RX NO SQ	5.49	0	5.55
		RX SQ	0	5.55	5.55
Q202	KTC4375	RX TX	10.36	9.83	13.75
Q203	KRA101S	RX	4.67	0.82	5.05
		TX	2.16	5.04	5.04
Q206	KTC3875	RX TX	0.05	4.92	GND

Symbol No.	Name	RX / TX	Base Gate	Collector Drain	Emitter Source
Q207	KTC3875	RX TX	0.60	0.05	GND
Q208	KTC3875	RX TX	0.32	4.92	GND
Q301	KRC104S	DTMF TX ON	2.32	0	GND
		DTMF TX OFF	0	4.93	GND
Q302	KRC104S	DTMF TX ON	0	4.93	GND
		DTMF TX OFF	2.32	0	GND

Symbol No.	RX/TX	Pin No.		Voltage
IC1	RX	1		5.13
		2		4.65
		3		0
		4		4.90
		5		5.19
		6		4.31
		7		4.31
		8		4.31
		9		5.13
		10		5.19
		11		2.08
		12		0.31
		13		1.30
		14		1.30
		15	No SQ	0
			SQ	2.40
		16	No SQ	5.68
			SQ	0
		17	No SQ	0
			SQ	0.47
		18		0.69
				0.20
		19		GND
		20		1.78
IC2	RX/TX	1		7.85
		2		GND
		3		13.73
IC3	RX	1		1.40
		2		0.63
		3		GND

Symbol No.	RX/TX	Pin No.	Voltage
IC3	RX	4	6.34
	RX	5	13.73
IC601	TX	1	1.50
	TX	2	1.50
	TX	3	1.50
	TX	4	1.50
	TX	5	1.50
	TX	6	1.50
	RX	7	1.00
	RX/TX	8	2.94
	RX/TX	9	0.81
	RX/TX	10	0.81
	RX/TX	11	0
	RX/TX	12	0.09
	RX/TX	13	0.09
	TX	14	3.50
	RX/TX	15	GND
	RX/TX	16	1.01
	RX/TX	17	1.10
	RX/TX	18	1.02
	RX/TX	19	1.20
	RX/TX	20	1.01
	RX/TX	21	1.00
	RX	22	1.04
	RX	23	1.04
	RX	24	0.81
	RX/TX	1	GND
		2	GND
		3	GND
		4	GND
		5	4.94

Symbol No.	RX/TX	Pin No.	Voltage
IC201	RX/TX	6	4.94
		7	GND
		8	4.94
IC202	RX/TX	1	5.05
		2	GND
		3	5.03
IC203	RX/TX	1	5.55
		2	GND
		3	12.62
IC204	RX/TX	1	2.46
		2	2.46
		3	2.47
		4	2.47
		5	2.47
		6	2.47
		7	4.94
		8	4.94
		9	3.29
		10	1.65
		11	GND
		12	0
		13	4.89
		14	0
		15	0
		16	0
		17	0
		18	5.03
		19	4.27
		20	4.94
		21	4.92
		22	4.92

Symbol No.	RX/TX	Pin No.		Voltage
IC204	RX/TX	23		4.92
		24		4.94
	TX	25		0
		26		4.9
	RX	27		0.65
		28		2.47
		29		4.92
		30		4.92
		31		4.92
		32		4.92
		33		4.92
	TX	34		3.59
	RX	35		1.63
	RX/TX	36		0
		37		0
		38		0
	RX	39		4.90
		40	No SQ	4.90
			SQ	4.90
		41	No SQ	0
			SQ	4.90
	RX/TX	42		0
		43		0
		44		4.90
		45		GND
		46		4.90
		47		2.54
		48		2.54
		49		GND
		50		4.90
		51	No SQ	5.09
			SQ	0
		52		0
		53		0

Symbol No.	RX/TX	Pin No.	Voltage
IC204	RX/TX	54	0
		55	0.17
		57	0
		58	GND
		59	4.50
		60	2.46
		61	2.46
		62	2.46
		63	2.46
		64	2.46
		65	2.47
		67	2.47
		68	2.47
		69	2.47
		70	2.47
		71	2.47
		72	2.47
		73	2.47
		74	2.47
		75	2.47
		76	2.47
		77	2.47
		78	2.47
		79	2.47
		80	2.47
IC701	RX/TX	1	2.5
		2	0
		3	0
		4	0
		5	5.44
		6	4.74
		7	0
		8	0
		9	3.80
		10	5.50

Symbol No.	RX/TX	Pin No.		Voltage
IC701	RX/TX	11		0
		12		GND
		13		5.30
		14		0
		15	RX	4.70
			TX	0
		16		2.70
IC301	TX DTMF	1	ON	2.77
			OFF	4.90
		2	ON	0
			OFF	4.90
		3	ON	2.75
			OFF	4.94
		4	ON	1.50
			OFF	4.94
		5	ON	1.5
			OFF	4.04
		6	ON	GND
			OFF	
		7	ON	1.20
			OFF	0
		8	ON	1.32
			OFF	4.94
		9	ON	1.52
			OFF	4.94
		10	ON	2.70
			OFF	0
		11	ON	1.50
			OFF	0
		12	ON	1.50
			OFF	0
		13	ON	2.75
			OFF	0
		14	ON	1.50
			OFF	0
		15	ON	0
			OFF	0
		16	ON	1.50
			OFF	0

SEMICONDUCTOR LEAD IDENTIFICATION AND IC INTERNAL DIAGRAMS

2SC1971

1. BASE
2. EMITTER (FIN)
3. COLLECTOR
4. FIN (EMITTER)

2SB1292

1. BASE
2. COLLECTOR
3. EMITTER

UM9401

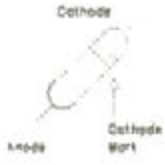

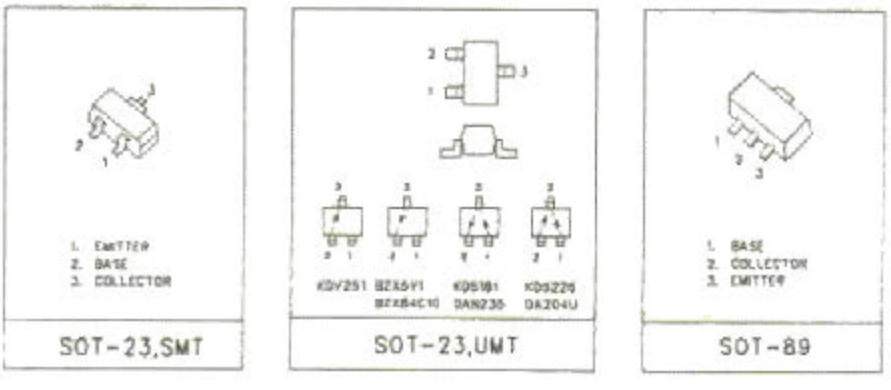

SOT-23,SMT | SOT-23,UMT | SOT-89

KTC3876 KTC3882
KTC3875 KTC1505
KRC114S 2SA1576R
KRA101S DTC114EU
2SC2412K 2SC4081
2SC2059-K
KRC104S
KRA107S
2SC3356

KDS181

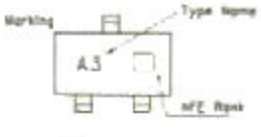

KTC4375
2SB1132
2SA1797
2SC2954

KIA7042F

3SK131

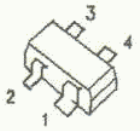

1. SOURCE
2. DRAIN
3. GATE2
3. GATE1

MOS FET

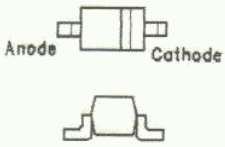

Z-DIODE DTZ2.2A
1SS355 1SV215

DIODE

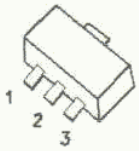

1. VCC
2. GND
3. OUT

SOT-89

2SK880

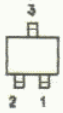

1. SOURCE
2. DRAIN
3. GATE

J FET

UMC5NTR

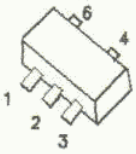

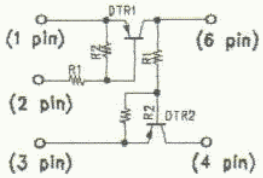

COLLECTORPIN ARRANGEMENT

	GND - OUT - IN
Tr1	1 - 6 - 2
Tr2	3 - 4 - 8

DTr1:R1=47Kohm / R2=47Kohm

DTr2:R1=4.7Kohm / R2=10Kohm

TK10487M

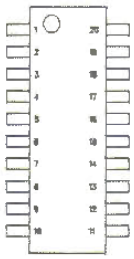

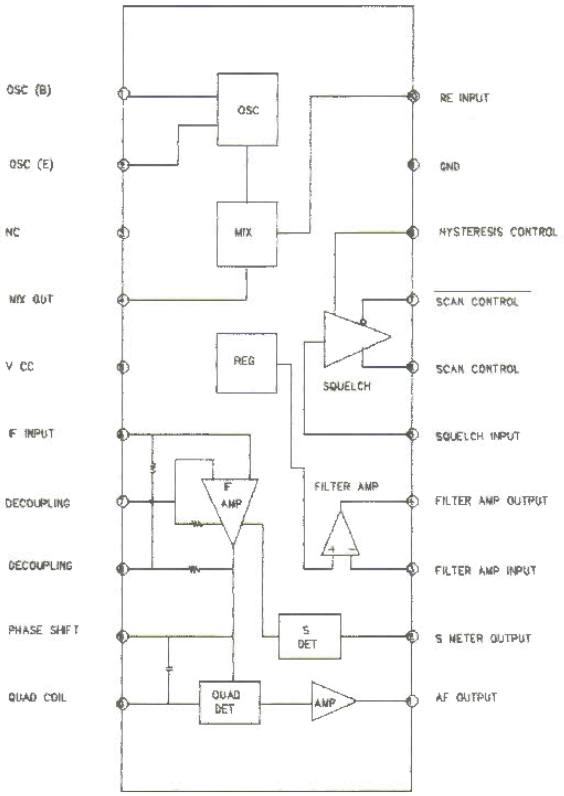

2SC1946A

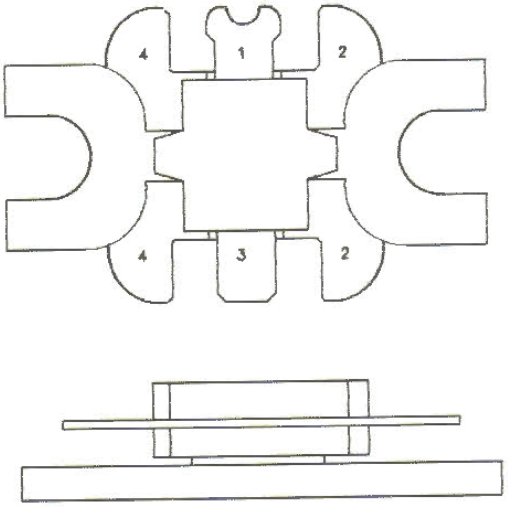

1. COLLCTOR
2. EMITTER (FLANGE)
3. BASE
4. EMITTER (FLANGE)

KIA78L05F/KIA78L08F

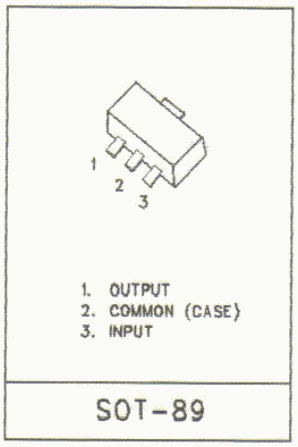

TDA2003

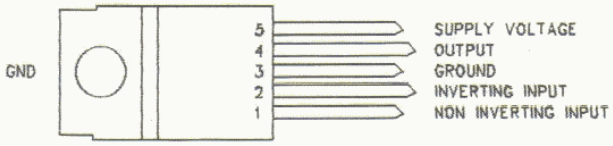

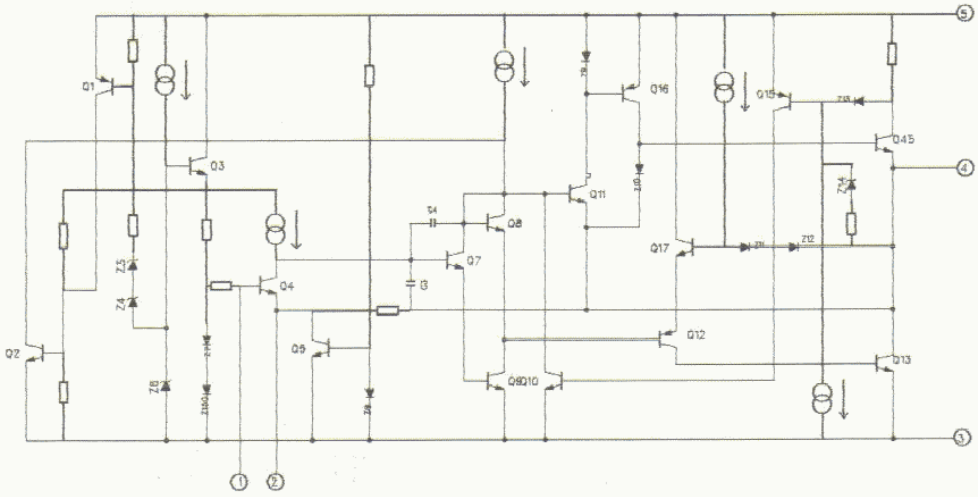

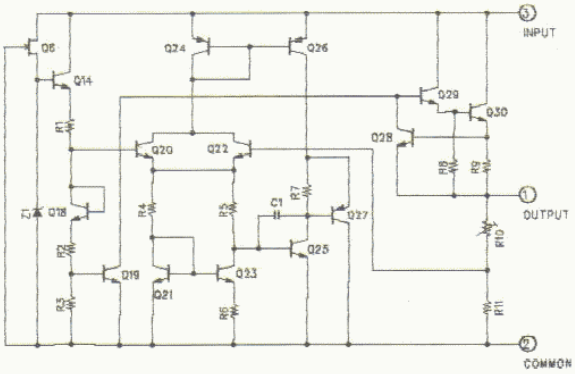

24C02

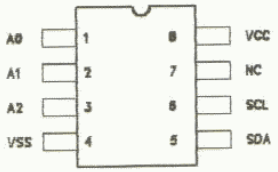

IN FUNCTIONS

PIN NAME	FUNCTION
A0,A1,A2	Device Address Inputs
SDA	Serial Data/Address
SCL	Serial Clock
NC	No Connect
VCC	+5V Power Supply
VSS	Ground

LC7365N

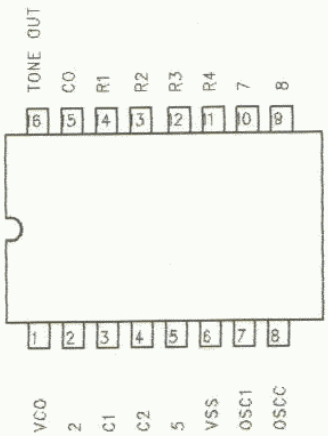

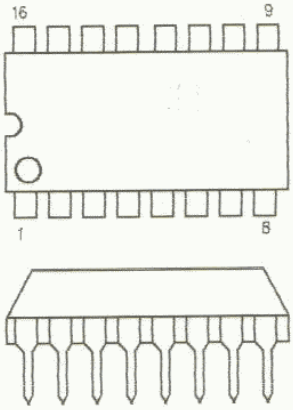

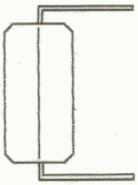

AK2345

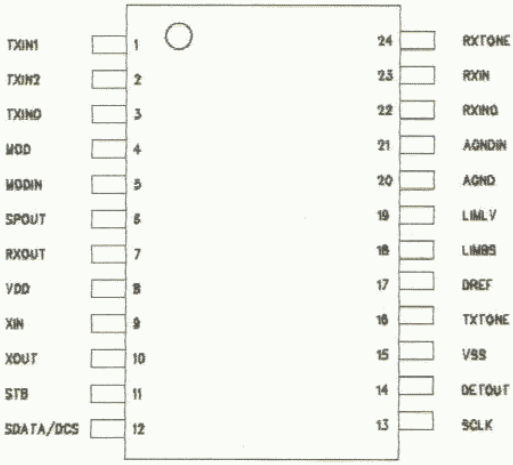

LV2105V

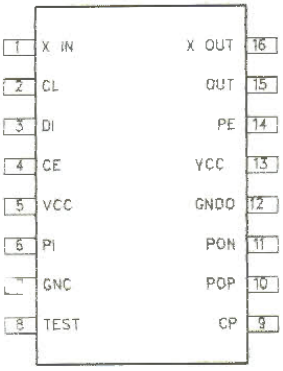

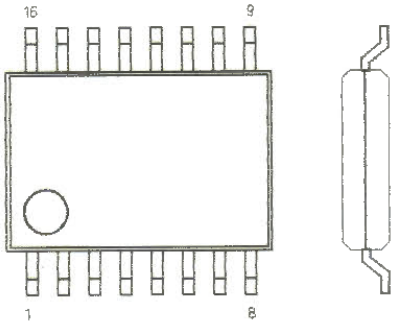

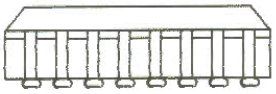

SY-252

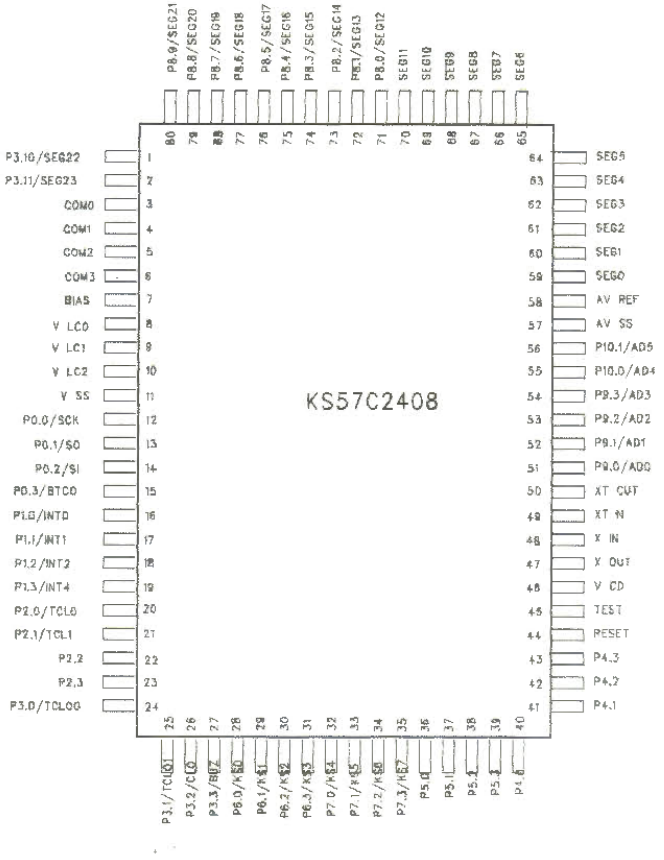

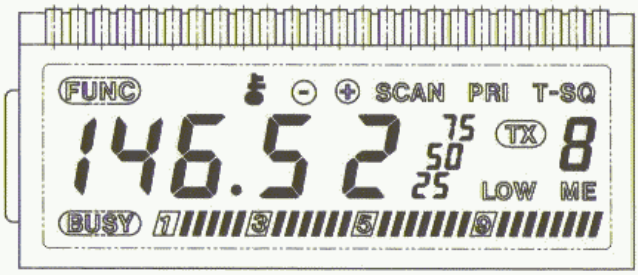

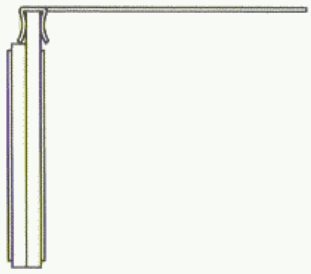

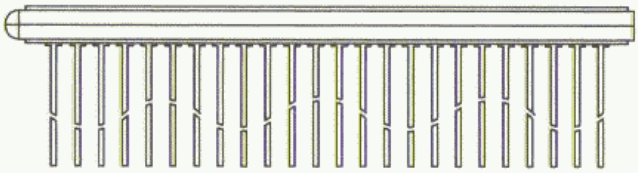

NOTE.

1. C-MOS: KS57C2408
2. 1/4 DUTY, 1/3 BIAS.
3. 5.0 VOP.
4. VIEWING DIRECTION: 6:00
5. OPERATIMG TEMP; -20°C TO +80°C
6. STORAGE TEMP: -30°C TO +80°C
7. APPLICATION: VHF
8. POSITVE TYPE.
9. FRONT POL: T/M
   REAR POL: T/F

1	2	3	4	5	6	7	8	9	10	11	12	13	14	15	16	17	18	19
BATT	K	5A	⊖	4A	⊕	3A	.	SCAN	2A	PRI	TX	T	1A	-SQ	COM1	.	.	.
FUNC	5F	5B	4F	4B	3F	3B	.	2F	2B	75	LOW	1F	1B	P1	.	COM2	.	.
K1	5E	5G	4E	4G	3E	3G	P2	2E	2G	50	25	1E	1G	ME	.	.	COM3	.
BUSY	5D	5C	4D	4C	3D	3C	S1	2D	2C	S2	S3	1D	1C	S4	.	.	.	COM4