SCHEMATIC DIAGRAM DR-140

<T,E Version >

CPU UNIT

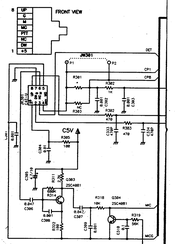

	TE1	TE2
R301 (8 ohm)	0	0
JK301 (Pin)	1	1
R341 (8 ohm)	0	0
JK302 (Pin)	1	1
R350 (8 ohm)	0	0
JK303 (Pin)	1	1
JK304 (Box)	0	0
R349 (8 ohm)	0	0

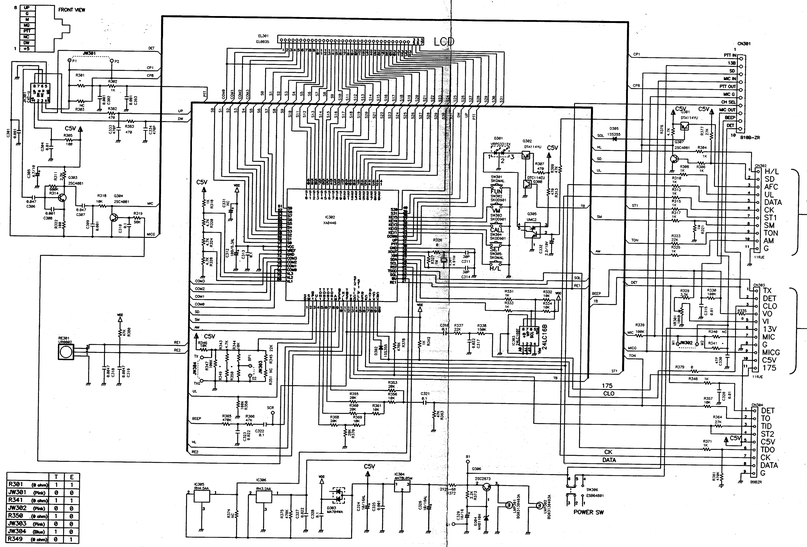

	T	E
R301 (8 ohm)	0	0
JK301 (Pin)	0	0
R341 (8 ohm)	1	1
JK302 (Pin)	0	0
R350 (8 ohm)	1	0
JK303 (Pin)	0	0
JK304 (Box)	1	0
R349 (8 ohm)	0	1

RF UNIT

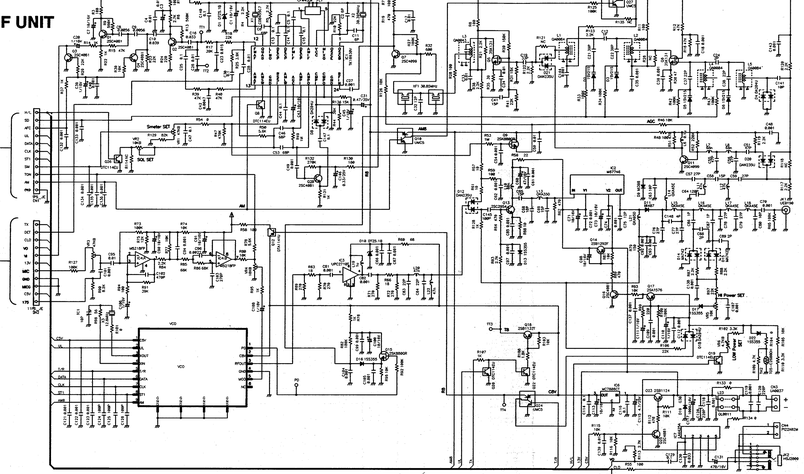

	L23	R133	R134
DR140T	–	O	O
DR140E	O	–	–

VCO UNIT

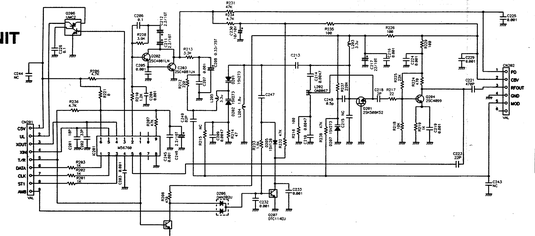

Ver	C213	C247
T,E	100P	5P

Specifications are subject to change without notice or obligation.

PK0063