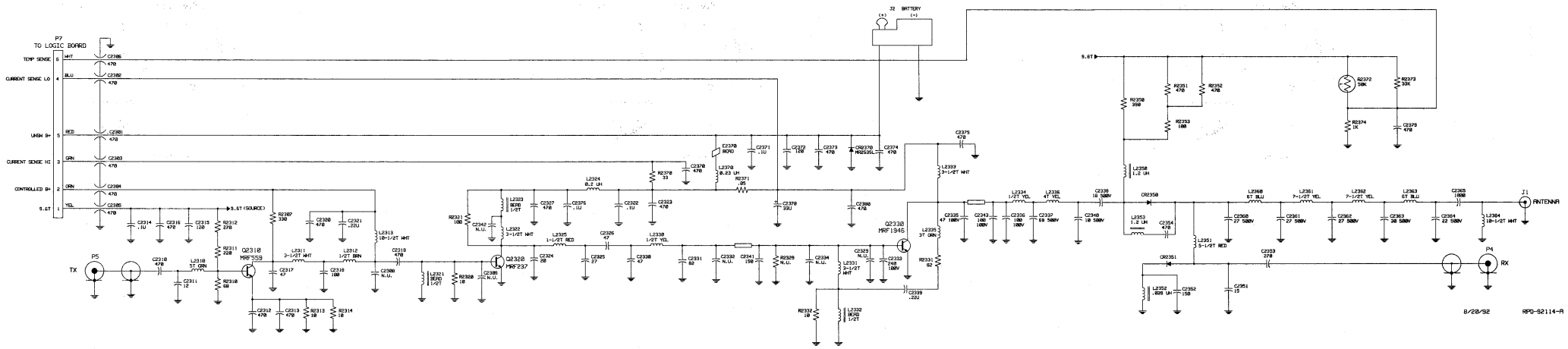
P7
TO LOGIC BOARD
TEMP SENSE
CURRENT SENSE LO
UNSW B+
CURRENT SENSE HI
CONTROLLED B+
S.6T
J2 BATTERY
Q2310 MRF559
Q2320 MRF237
Q2330 MRF1946
P5 TX
P4 RX
J1 ANTENNA
8/28/92
RPD-92114-A

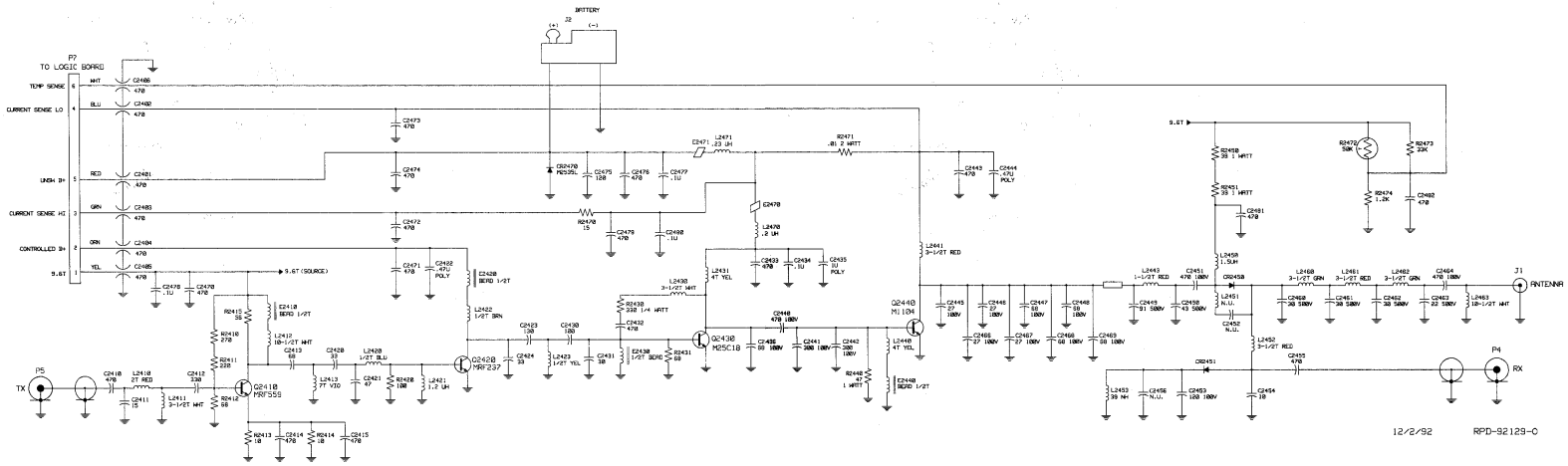
P7
TO LOGIC BOARD
TEMP SENSE
CURRENT SENSE LO
UNSW B+
CURRENT SENSE HI
CONTROLLED B+
S.6T
BATTERY
J2
Q2410 MRF559
Q2420 MRF237
Q2430 M25C18
Q2440 MJ104
P5 TX
P4 RX
J1 ANTENNA
12/2/92
RPD-92129-0