TH-55AT/E
SERVICE MANUAL

KENWOOD

B51-3427-00(O)557

Photo is TH-55AT.

CONTENTS

DISASSEMBLY FOR REPAIR

Replacing the Lithium Battery

1. Remove the 4 screws holding the case (front), and remove it (❶).
2. Pull out the knobs and rings from the panel (❷).
   To remove the round nuts, use special tool T-041.
3. Hold the panel by the case (rear), and pull it toward the front by slightly lifting it upward, so that the flexible cables come out (❸).

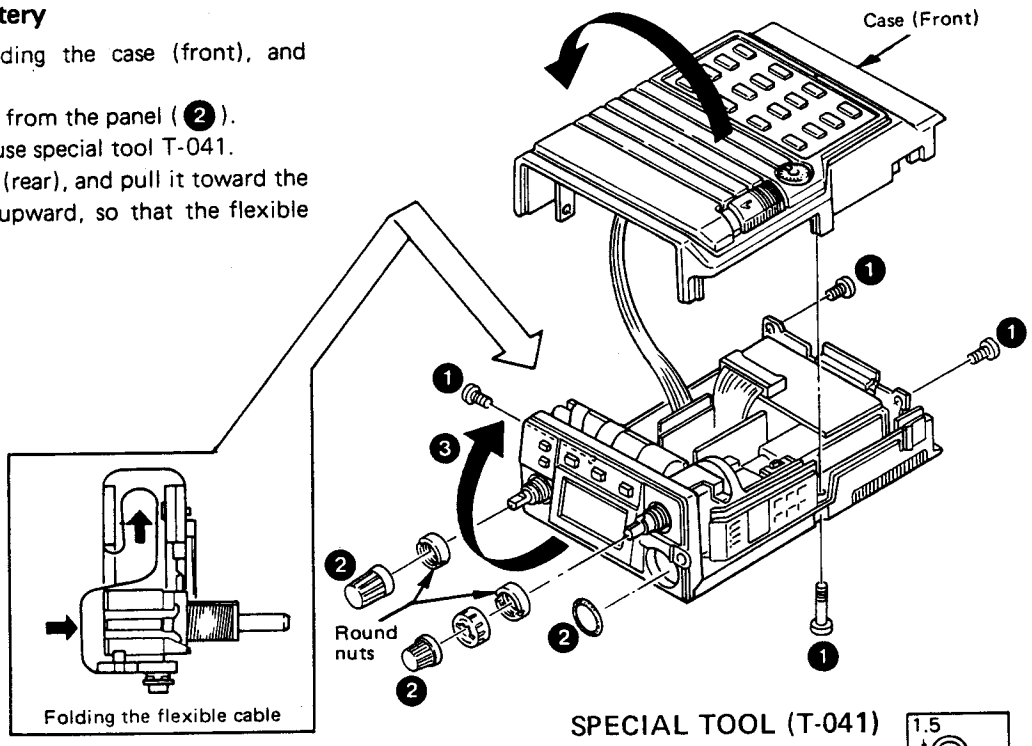

SPECIAL TOOL (T-041)

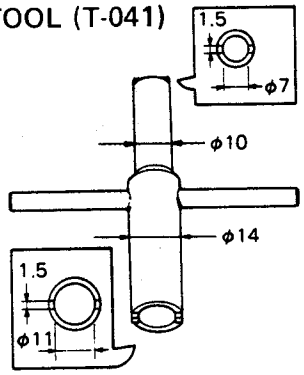

T-041 Double-ended nut spanner

4. After replacing the lithium battery, fold the flexible cables as shown in the illustration (❹).

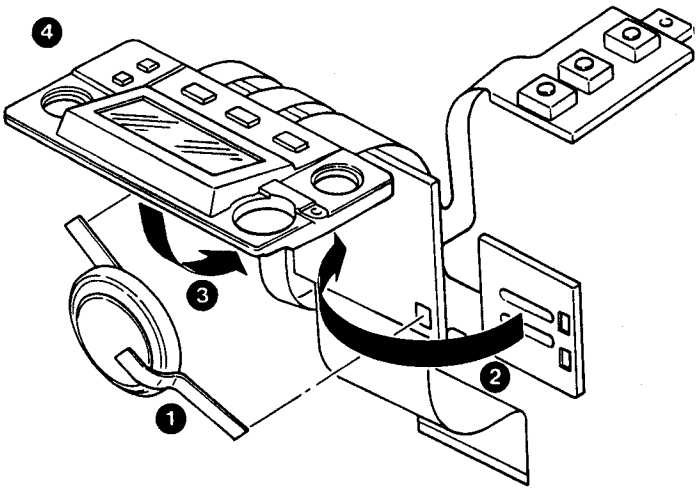

DISASSEMBLY FOR REPAIR

Removing the TX-RX Unit

Remove the screws in the order of the numbers shown in the illustration, and then disconnect the connectors and flexible cables ; now the TX-RX Unit can be taken out. When the shielding cover is to be removed while leaving the TX-RX Unit attached to the case (rear), it is not necessary to remove the screws numbered (14) and after.

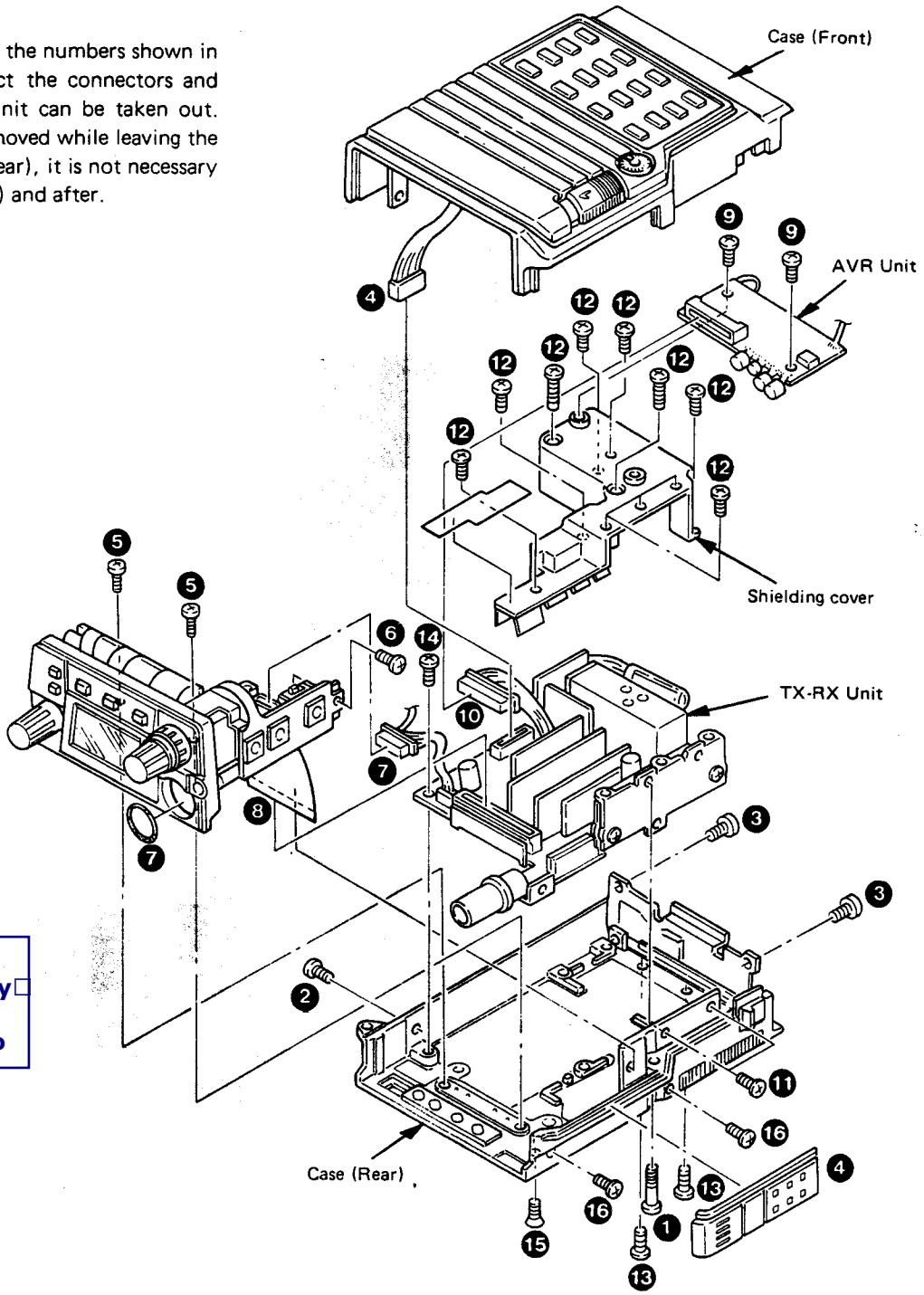

CIRCUIT DESCRIPTION

FREQUENCY CONFIGURATION

The TH-55 uses a PLL synthesizer system and a digital VFO that is capable of covering a frequency range of 1258 MHz to 1299.9875MHz in 12.5kHz or 25kHz increments.

Its receiver system configuration is based upon double super-heterodyne operating principles with a first intermediate frequency (IF) of 59.7MHz and a second intermediate frequency of 455kHz.

An incoming signal from the antenna is mixed with the first local oscillator signal to produce the first intermediate frequency of 59.7MHz. The first intermediate frequency is then mixed with the second local oscillator frequency of 59.245MHz to produce the second intermediate frequency of 455kHz.

The transmitter system signal is obtained by doubling the oscillating frequency of the VCO. The signal is then amplified by a linear amplifier and fed to the antenna.

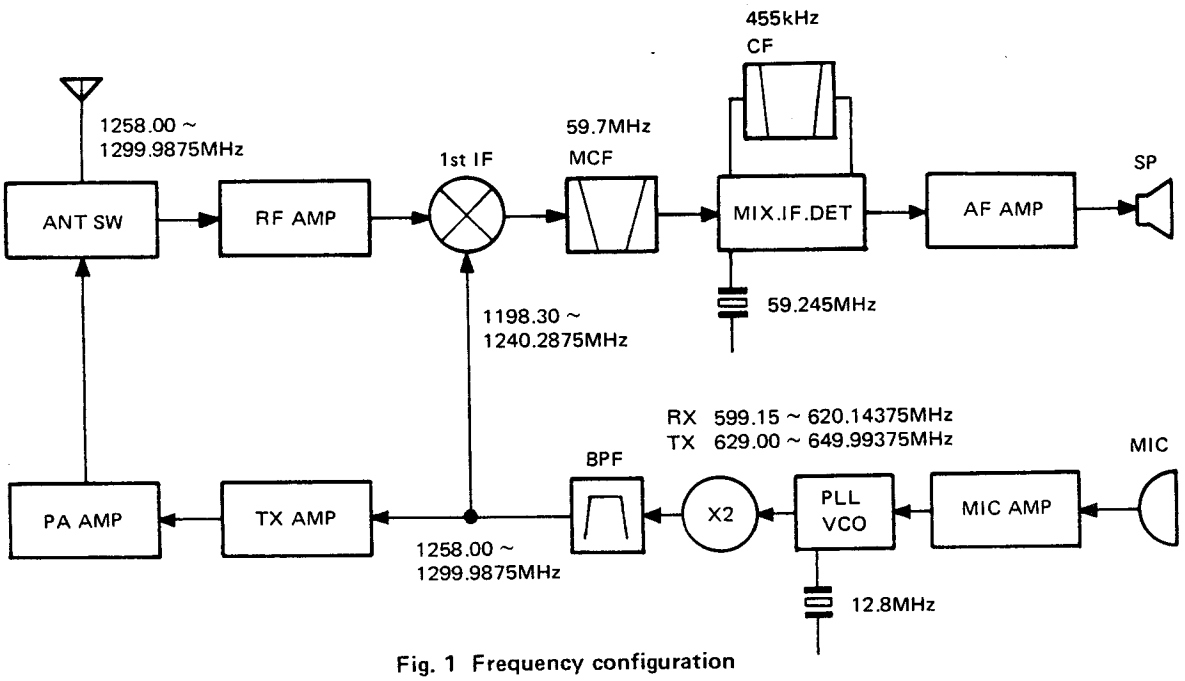

Fig. 1 Frequency configuration

RECEIVER SYSTEM

• General

An incoming signal from the antenna passes through a low-pass filter and an antenna switch and enters the front-end section. The signal is amplified by an RF amplifier composed of Q6 and Q7 : 2SC4095. Undesirable band components are attenuated by helical coils L12 and L13. The processed signal is then mixed with the doubled VCO frequency to produce the first intermediate frequency of 59.7MHz. The signal, in the from of the first intermediate frequency, then passes through the two monolithic crystal filter (MCF) stages for further elimination of undesirable signals. After passing through the MCF stages, the target signal enters IC1 : TK10486MT1(B,C) located inside the IF unit and is mixed with the second local oscillator frequency to produce the second intermediate frequency of 455kHz. The 455kHz IF signal passes through ceramic filter (CF1) and re-enters IC1 for additional amplification and demodulation. The output derived from IC1 is then amplified by the audio frequency (AF) amplifier and fed to the speaker.

Item	Rating
Norminal center frequency (fo)	59.700MHz
Pass bandwidth	±12.5kHz or more at 3dB
Attenuation bandwidth	±35kHz or less at 25dB ±100kHz or less at 60dB
Guaranteed attenuation	70dB or more within ± 1MHz 80dB or more within ± 890 ~ 930kHz Spurious : 40dB or more within fo ~ fo + 500kHz
Ripple	2dB or less
Insertion loss	4dB or less
Terminal impedance	560Ω ± 5% / 1.5pF ± 0.1pF

Table 1 MCF (L71-0280-05) (TX-RX unit XF1, XF2)

Item	Rating
Center frequency of 6dB bandwidth (fo)	455kHz ± 1.5kHz
6dB bandwidth	± 7.5kHz or more
40dB bandwidth	± 15kHz or less
Ripple	1.5dB or less (455kHz ± 1.5kHz)
Guraranteed attenuation	27dB or more within fo ± 100kHz
Insertion loss	6dB or less
Terminal impedance	1.5kΩ

Table 2 Ceramic filter (L72-0362-05) (IF unit CF1)

CIRCUIT DESCRIPTION

• Squelch and Mute Circuit

This unit has the T.ALT (Tone Alert) function to produce two muting signals. When a signal is received while the T.ALT function is ON, only a beep tone is sounded.

The microprocessor determines existing conditions and provides muting signals MU1 and MU2 as necessary. The conditions for various muting operations are listed in table 3. When the microprocessor outputs a logical high, muting takes place.

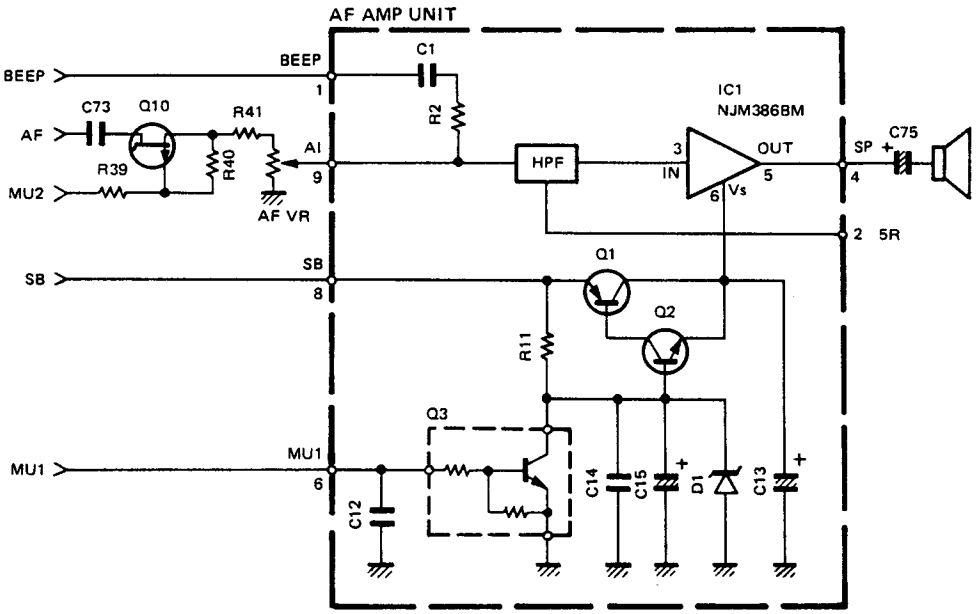

Fig. 2 Mute circuit

Condition			MU1	MU2
Transmission			H	H
Reception	Normal operation	When Squelch is ON	H	H
		When Squelch is OFF	L	L
	T.ALT operation	Waiting for Signal	H	H
		Signal is Received (T.ALT operating)	L	H

Muted when the level is a logic "H".

Table 3 Muting conditions

• S-Meter Circuit

The signal used to drive the S-meter (signal strength meter) is taken from pin 12 by detecting the output from the IF amplifier IC1 : TK10486MT1(B,C) located in the IF unit. This signal is then directly applied to pin 14 of the microprocessor and is used to control the S-meter section of the liquid crystal display (LCD). Since its display segments operate in pairs, signal strength can be indicated in six levels.

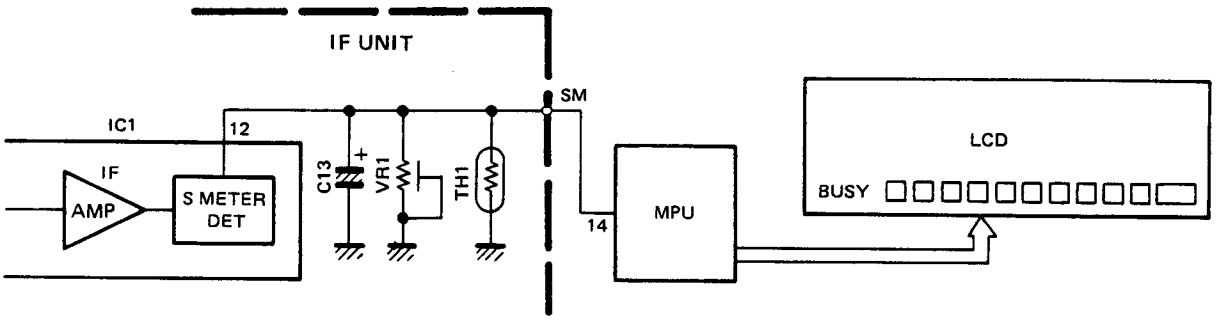

Fig. 3 S-meter circuit

CIRCUIT DESCRIPTION

• RIT Circuit

The RIT circuit achieves a frequency deviation of over ±5kHz by varying the frequency of crystal oscillator X1, which serves as a reference frequency oscillator for the PLL circuit.

During receive, the transistor on the VR1 side, one half of Q2 : FMG2, is turned OFF and the other half is turned ON. Since the reverse bias applied to D1 : MA363 of the PLL unit can be varied by means of VR2 within a range of over ±1V, the frequency of the first local oscillator can be varied in excess of ±5kHz.

During transmission, the half of Q2 on the VR1 side is turned ON and the other half is turned OFF. This condition inhibits VR2, and as a result, the transmission frequency is fixed as preset by VR1.

Excellent frequency stability is achieved by virtue of thermistor TH1, which temperature-compensates the reference-frequency crystal oscillator.

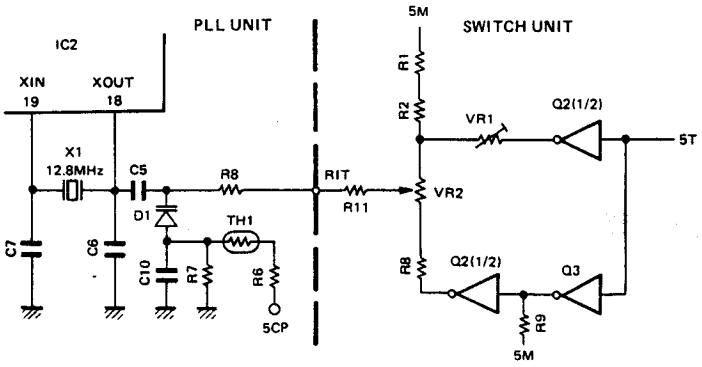

Fig. 4 RIT circuit

TRANSMITTER SYSTEM

• General

The transmitter frequency is obtained by doubling the oscillation frequency of the voltage-controlled oscillator (VCO) in the PLL circuit.

Modulation is achieved by varying the oscillation frequency of the VCO by means of the microphone amplifier's output, which is directly applied to the variable-capacitance (varicap) diode located in the VCO circuit.

The output derived from the VCO is amplified, first in the drive stage, then by the RF power module where the signal is amplified to the required power level and fed to the antenna.

• Modulation Circuit

The signal from the microphone enters the MIC amplifier unit where it is amplified and then limited. The output signal from the limiting amplifier passes through the splatter filter and reaches the MOD terminal by way of the microphone gain control. The signal enters the VCO unit and is applied to varicap diode D2 : MA360 in the VCO circuit, producing variable reactance phase modulation.

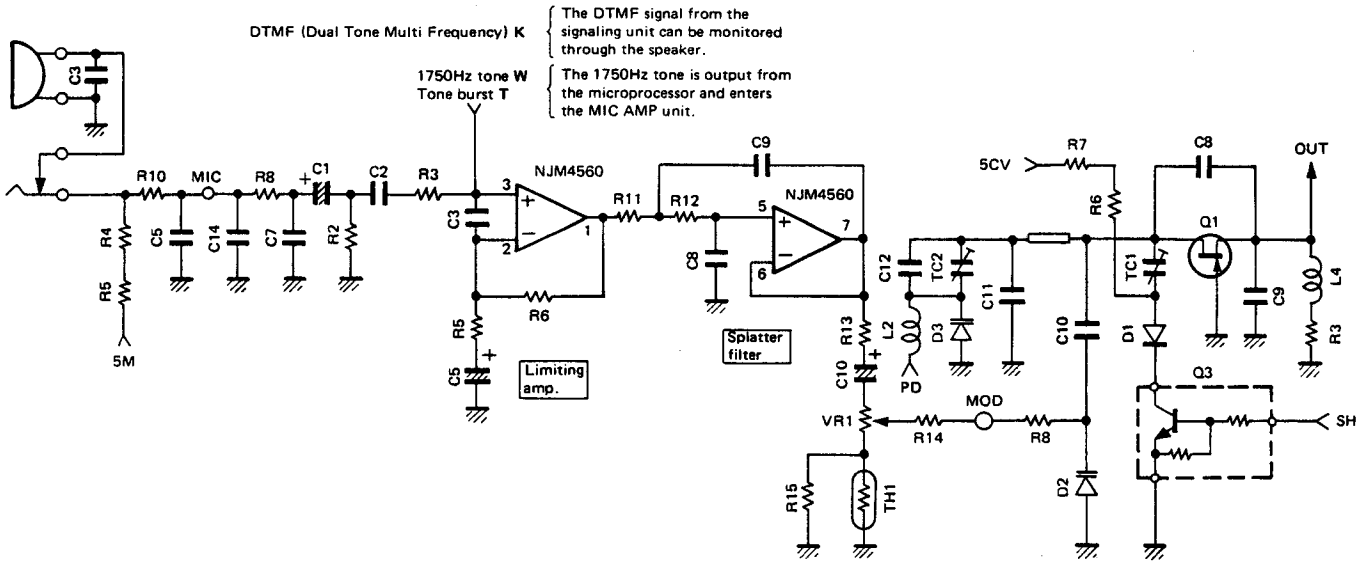

Fig. 5 Modulation circuit

CIRCUIT DESCRIPTION

• Drive and Final Circuits

The modulated signal from the VCO is doubled in frequency, passes through the band-pass filter (BPF) and the transmit/receive switch composed of D1 and D2 : MA77, and enters the drive stage. In the drive stage, the signal is amplified by a two-stage amplifier to approximately +9 dBm. The Automatic Power Control (APC) voltage is used to vary the collector voltage of the first-stage of the power module in order to control the output. The output from the drive circuit is further amplified by the RF power module and fed to the antenna through the antenna switch.

• Hi/Low Switching Circuit

The TH-55 is equipped with a transmit power switch to allow selection of a high output power of 1W (with a power source voltage of 9V) or a low output power of 0.1W.

This switch is used to turn ON/OFF potentiometers VR1 and VR2 in the APC unit, which in turn change the base voltage of Q2. As a result, the CTL voltage is changed.

• APC Circuit

The APC circuit is designed to deliver stable transmitter output power. This circuit operates by detecting the standing wave of the final module's output with the help of a directional coupler. The signal obtained from this coupler is used to provide, automatic power control by controlling Q2, Q3, and Q4 in the APC unit, which in turn vary the power supply voltage of the power module's first stage.

By virtue of the above control operation, stable RF output power can be generated from the final module. Furthermore, a relatively constant current to the final module that is independent of load variations can be provided.

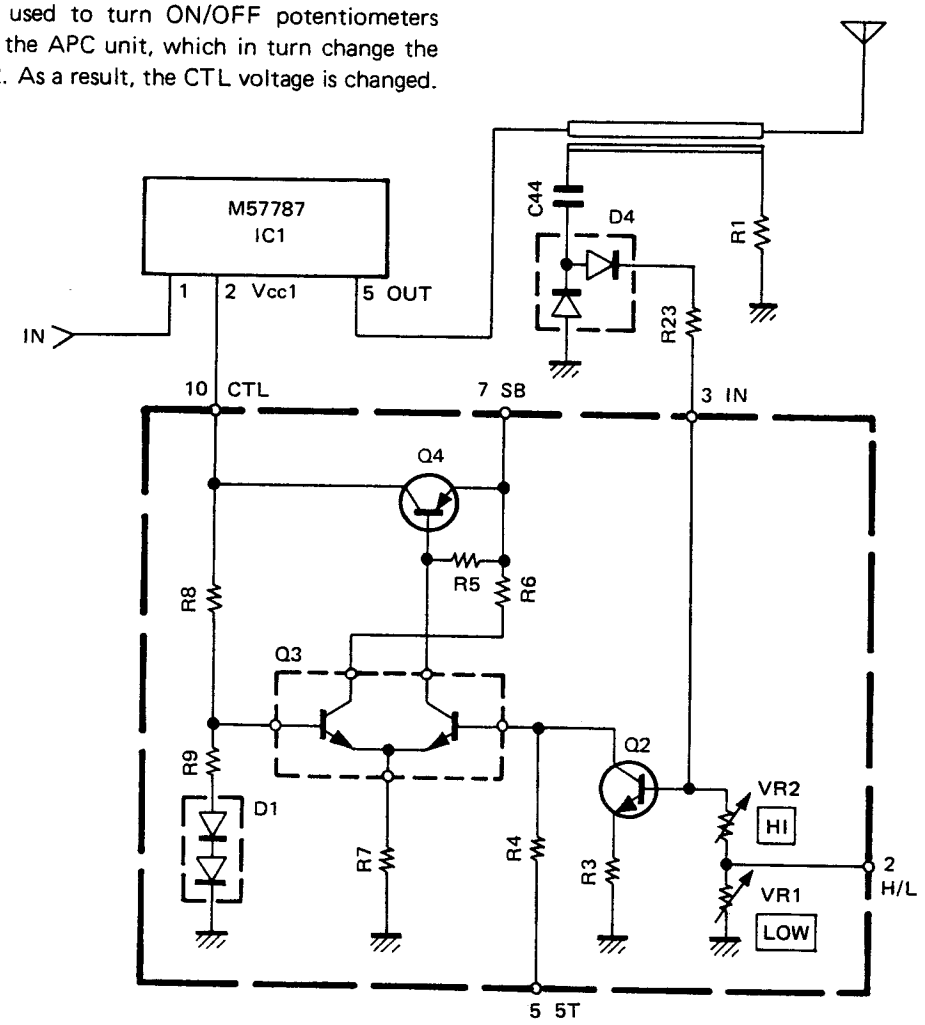

Fig. 6 APC and HI/LOW switching circuit

CIRCUIT DESCRIPTION

POWER SUPPLY CIRCUIT

The individual circuits that make up the TH-55 are operated by power supply voltage SB and one or more of the following voltages, which are obtained from the power supply voltage SB : 5V (5T) transmit B+, 5V (5R) receive B+, 5V (5C) common B+, and 5V (5M) microphone/microprocessor B+.

The signal that appears on the TX terminal is used to switch between 5T and 5R. Since pin 29 of the microprocessor is at a logical low during transmission, transistor Q4 : 2SA1313(Y) turns ON and 5C is supplied at the 5T terminal.

During reception, pin 29 of the microprocessor is open (logical high), transistor Q4 : 2SA1313(Y) turns OFF and, in turn, Q5 and Q6 turn ON supplying 5C at the 5R terminal.

5C is obtained from, 5V three-terminal regulator IC1 : LP2950CZ, a differential amplifier Q2 : FMW1 and Q1 : 2SB1182F5(Q).

The 5V output of regulator IC1 is used to power the microprocessor and the microphone amplifier circuit.

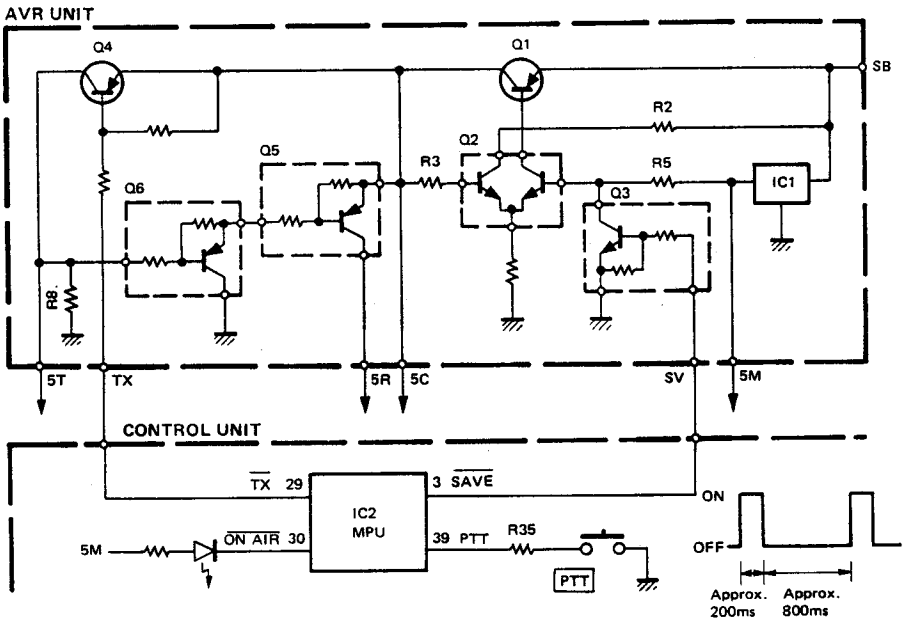

Fig. 7 Power supply circuit

• Battery-save and Automatic Power OFF

The TH-55 is equipped with a battery-save function and an automatic power-off function to save battery power during standby reception. The microprocessor : μPD75108AG places a control signal on its SAVE pin (pin 3), which activates the battery-save function or the automatic power-off function depending on existing conditions. When this signal is present, all power supplies are turned off except the 5V (5M) that is used for powering the microprocessor and the microphone amplifier circuit. When the battery-save function is operative, it alternately switches between the ON (normal) state for approximately 200msec. and the OFF (save) state for approximately 800msec.

The power-off function sustains the above OFF state, in which the current consumption is reduced to approximately 5mA.

	Battery-saving operation	Auto power-off operation	To cancel battery-save and auto power-off operation
Operation starting time	10 seconds after the closure of the squelch circuit and if no key has been pressed in the interim.	60 minutes after the closure of the squelch circuit and if no key has been pressed during this period. (A beep tone sounds for 5 seconds after 59 minutes.)	Turn the power switch ON again while holding down the "MHz" key.
Resetting	Receive an incoming signal. Open the squelch function. Or press a key.	Press the MONI key. Turn the power switch ON again.	Turn the power switch ON again while holding down the "MHz" key.
Display	Normal	paOFF	95.300 APO/BS cancel mark

Table 4 Battery-saving and automatic power-off operation conditions

CIRCUIT DESCRIPTION

PLL SYNTHESIZER SECTION

In the TH-55, a common VCO is used to obtain 40MHz for both transmission and reception.

To obtain comparison frequencies in 12.5kHz and 25 kHz increments, the 12.8MHz oscillation frequency of the reference oscillator is divided by 2048 to produce 6.25kHz. The VCO runs at half the target frequency required for use by both transmitter and receiver sections. The transmit/receive switching signal is felt on the SW1 pin 14 of IC2 : JLC1075F. The output signal derived from the VCO is applied to a frequency-doubler as well as the prescaler IC1 : MB501L. This IC incorporates two modular prescalers, one with a frequency division factor of 1/128 and the other with a frequency division factor of 1/129. Selection is made by way of the MC terminal. The output of the prescaler is applied to the PLL IC IC2 : JLC1075F. Using these two ICs, a pulse-swallow PLL circuit configuration is created.

The output of the phase comparator passes through the charge pump made up of Q2 and Q3 external to the synthesizer section, then through the active low-pass filter (LPF) made up of Q4 : 2SC2712(GR) and Q5 : 2SC3624(L18), and is applied to varicap diode D3 : MA360 in the VCO section.

These PLL division ratios and frequencies are expressed by the following equation :

Overall division ratio, M = A + 128N,

where A is the swallow counter division ratio, and N is the main counter division ratio.

A and N are received from the microprocessor as serial data and take on different values between transmission and reception. For this reason, the overall division ratio, M, calculated for transmit is different from its counterpart in receive. The data is stored in a 19-bit shift register.

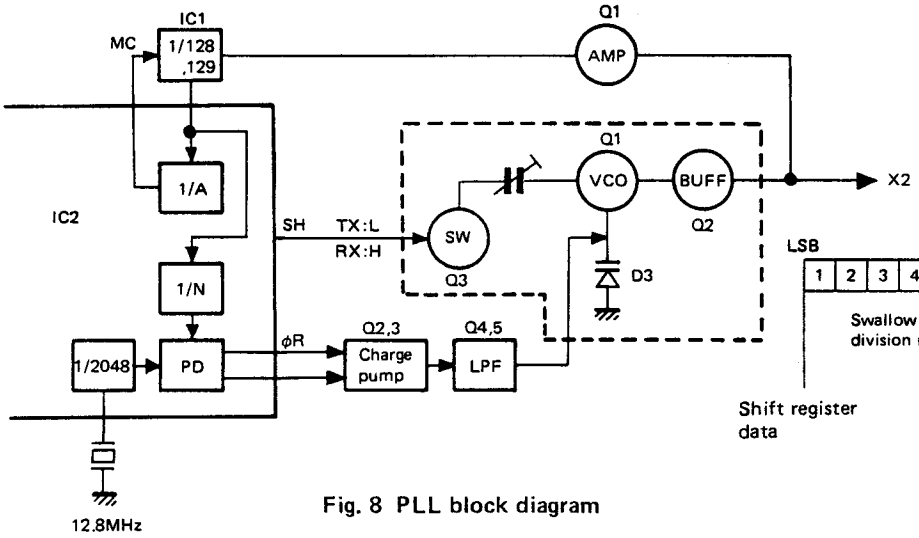

Fig. 8 PLL block diagram

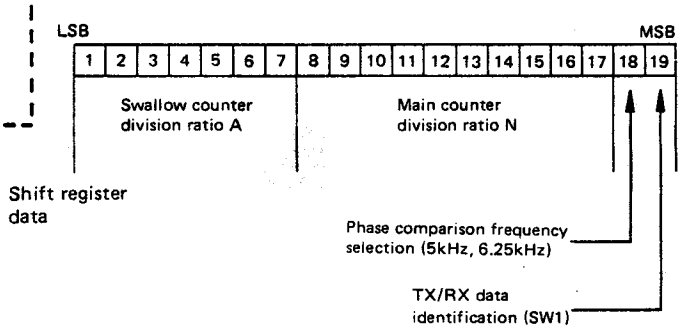

Fig. 9 PLL data configuration

MICROPROCESSOR & PERIPHERAL CIRCUITS

• Tone Alert Function (T.ALT)

The T.ALT function is designed to alert the user by sounding a 5-second beep tone and by flashing the bell (tone alerm) indicator when an incoming signal is received during standby. Terminals S2 and I1 are shorted by pressing the T.ALT switch and the microprocessor senses this switching action and outputs logical high signals on its MU1 and MU2 terminals.

The output on MU1 turns off the power supply (VS) to the AF amplifier, while the output on MU2 turns off the input signal to the AF amplifier by means of Q10 : 2SJ144 (GR).

When an incoming signal is received from the antenna, terminal SC of the IF unit goes from low to high, and this activates the BUSY pin of the microprocessor. When the microprocessor receives this signal, it pulls MU1 low to turn on the power supply of the AF amplifier.

At the same time, the microprocessor outputs a beep tone on its BEEP terminal. This signal is amplified by the AF amplifier and output by speaker SP.

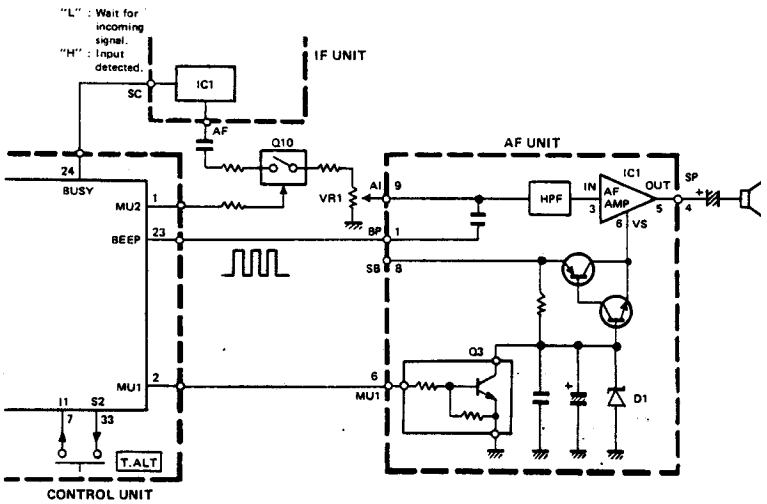

Fig. 10 T.ALT functional circuit

CIRCUIT DESCRIPTION

• Reset and Backup Circuits

In the reset and backup circuits, various operations are performed through the detection of voltage 5M. Resetting is done by applying a logical low pulse, which is produced by C1 and Q1 : 2SC2712(Y), to the RESET terminal of the microprocessor. Backup operations are controlled when the 5M voltage drops to approximately 4.5V (4.3V to 4.6V). When this occurs the output of IC3 : S8054ALR goes low. The microprocessor senses this low state at its VF terminal and goes into the backup mode.

When the 5M voltage rises abruptly, the reset circuit made up of C1 and Q1 resets the microprocessor. When the 5M voltage rises gradually, the reset operation is performed within the microprocessor by the detection of a voltage rise that takes place as the output of IC3 changes from low to high.

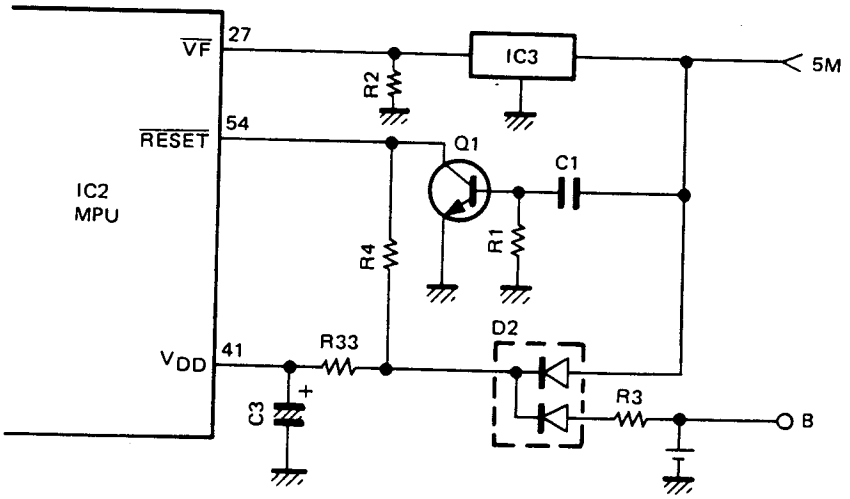

Fig. 11 Reset and backup circuit

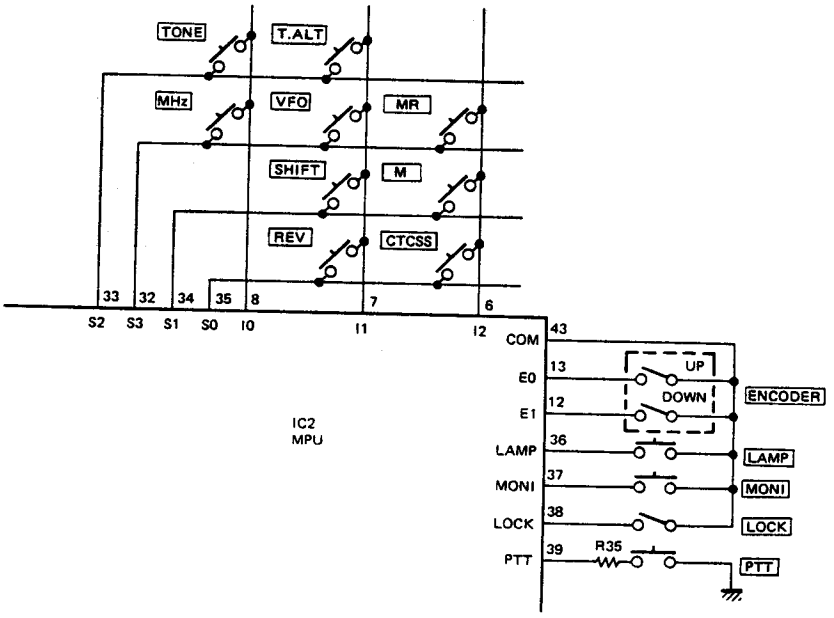

Fig. 12 Keyboard

SEMICONDUCTOR DATA

LH5008TP (Control unit IC1)

- Terminal connection diagram

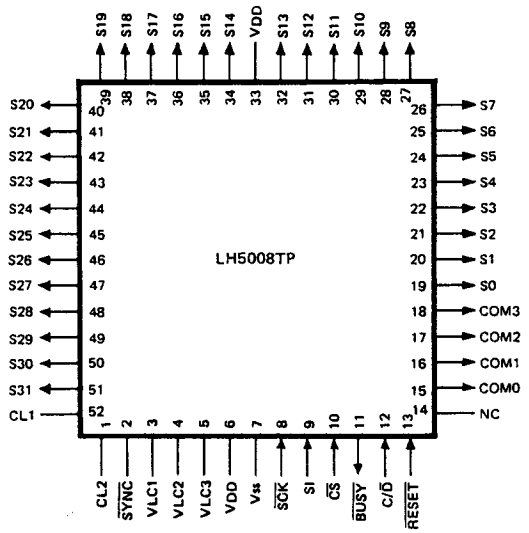

μPD75108AG-028-22 (Control unit IC2)

- Terminal connection diagram

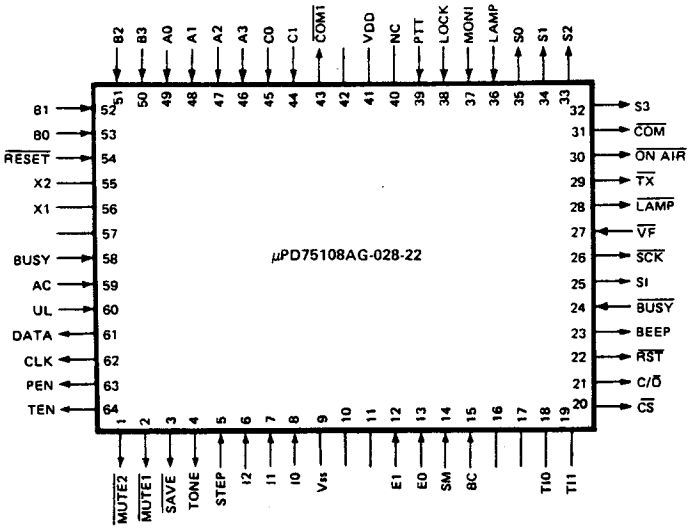

- Terminal functions (LH5008TP)

Pin No.	Name	I/O	Function
1	CL2	–	Internal clock oscillation resistance pin.
2	$\overline{SYNC}$	–	Not used.
3, 4	VLC1, VLC2	–	LCD driver power supply.
5	VLC3	–	Ground.
6	VDD	–	+5V power supply.
7	VSS	–	Ground.
8	$\overline{SCK}$	I	Shift clock input.
9	SI	I	Serial data input.
10	$\overline{CS}$	I	Enable input. "L" : Data input enabled, "H" : Contents of the memory are output
11	$\overline{BUSY}$	O	Data input control. "L" : Inhibit, "H" : Permit
12	C/$\overline{D}$	I	Input data indentification input. "L" Data, "H" : Command
13	$\overline{RESET}$	I	Reset input.
14	NC	–	
15 ~ 17	COM0 ~ COM2	O	Common drive output.
18	COM3	O	Not used.
19 ~ 32	S0 ~ S13	O	Segment drive output.
33	VDD	–	+5V power supply.
34 ~ 45	S14 ~ S25	O	Segment drive output.
46 ~ 51	S26 ~ S31	O	Not used.
52	CL1	–	Internal clock oscillation resistance pin.

SEMICONDUCTOR DATA

● Terminal functions (μPD75108AG-028-22)

Pin No.	Name	I/O	During save	Function
1	$\overline{MUT2}$	O	L	AF input line control. "L" : ON, "H" : OFF
2	$\overline{MUT1}$	O	H	AF amplifier power control. "L" : ON, "H" : OFF
3	$\overline{SAVE}$	O	H	Power save control. "L" : ON, "H" : OFF
4	TONE	O	L	Tone output. During transmit, 1750Hz. **T, W Type**
5	STEP	I	–	Step control. "L" : ON, "H" : OFF
6	I2	I	–	Key matrix input. M, CTCSS, MR
7	I1	I	–	Key matrix input. VFO, T.ALT, SHIFT, REV
8	I0	I	–	Key matrix input. MHz, TONE
9	Vss	–	–	Ground.
10, 11	–	–	–	Ground.
12	E1	I	–	Encoder input. DOWN
13	E0	I	–	Encoder input. UP
14	SM	I	–	S meter input.
15	BC	I	–	Battery voltage check.
16, 17	–	–	–	Ground.
18	TI0	–	–	Ground.
19	TI1	–	–	Ground.
20	$\overline{CS}$	O	H	LCD driver control output.
21	C/$\overline{D}$	O	H	LCD driver control output.
22	$\overline{RST}$	O	H	LCD driver control output.
23	BEEP	O	L	Square wave output when BEEP is on.
24	$\overline{BUSY}$	I	–	LCD driver control output.
25	SI	O	–	LCD driver control output.
26	$\overline{SCK}$	O	–	LCD driver control output.
27	$\overline{VF}$	I	–	Perform backup operation when the 5M voltage drops.
28	$\overline{LAMP}$	O	H	Lamp ON/OFF control. "L" : ON, "H" : OFF
29	$\overline{TX}$	O	H	Transmit/receive switching. "L" : Transmit, "H" : Receive
30	$\overline{ON\ AIR}$	O	H	ON AIR display output. "L" : ON, "H" : OFF
31	$\overline{COM}$	O	L	"L" : normal, "H" : during save or backup.
32	S3	O	L	Key matrix output. MHz, VFO, MR
33	S2	O	L	Key matrix output. TONE, T.ALT
34	S1	O	L	Key matrix output. M, SHIFT
35	S0	O	L	Key matrix ourpur. CTCSS, REV
36	LAMP	I	–	Lamp switch control. "L" : SW ON, "H" : SW OFF
37	MONI	I	–	Monitor switch control. "L" : SW ON, "H" : SW OFF
38	LOCK	I	–	Lock switch control. "L" : SW ON, "H" : SW OFF
39	PTT	I	–	PTT switch control. "L" : SW ON, "H" : SW OFF
40	NC	–	–	Open.
41	VDD	–	–	+5V power supply.
42	–	–	–	Ground.
43	$\overline{COM1}$	O	L	
44	C1	I	H	Display switching. "L" : Normal display, "H" : Channel display
45	C0	I	–	VHF/UHF switching. "L" : VHF, "H" : UHF
46 ~ 49	A3 ~ A0	I	–	Destination.
50 ~ 53	B3 ~ B0	I	–	Destination.
54	$\overline{RESET}$	I	–	System reset.
55	X2	–	–	
56	X1	–	–	
57	–	–	–	Open.
58	BUSY	I	–	Busy control. "L" : Open, "H" : Busy
59	AC	I	–	Tone squelch control output. "L" : No match, "H" : Match
60	UL	I	–	Unlock output. "L" : Lock, "H" : Unlock
61	DATA	O	L	PLL, TONE data.
62	CLK	O	L	PLL, TONE clock.
63	PEN	O	L	PLL enable.
64	TEN	O	L	CTCSS enable.

SEMICONDUCTOR DATA

FTD8608 (Control unit LCD)

- All lighting

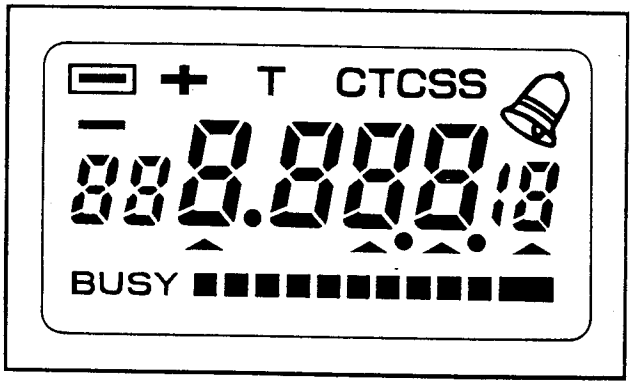

M57787 (TX-RX unit IC1)

- Equivalent circuit

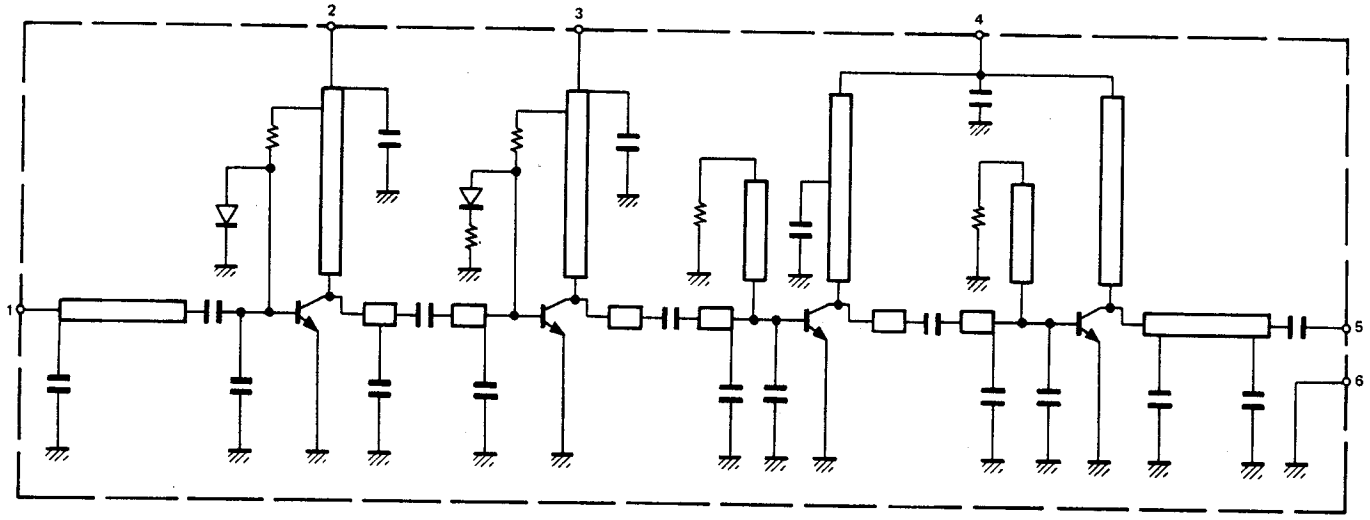

1 ; Input
2 : Pre-drive + B
3 : Bias + B
4 : Final + B
5 : Output
6 : GND (Fin)

- Electrical characteristics

Item	Symbol	Rating			Unit	Condition
		MIN.	TYP.	MAX.		
Output power	Po	1.5	1.7		W	Vcc1 = Vcc2 = Vcc3 = 7.2V
Total efficiency	ηT	28	30		%	f = 1.24 ~ 1.3GHz
2nd spurious				−30	dB	Pin = 7mW
Input SWR	ρ in			2.5	–	$Z_G = Z_L = 50\Omega$
Output SWR	ρ out		1.5		–	Tc = 25°C

- Maximum rating

Item	Symbol	Condition	Rating	Unit
Operating voltage	Vcc1, 2		9	V
Operating voltage	Vcc3		16	V
Current consumption	Icc		1.5	A
Input power	Pin	$Z_G = Z_L = 50\Omega$, Vcc1 ≦ 8V, Po ≦ 3W	10	mW
Output power	Po	$Z_L = 50\Omega$	5	W
Operating case temperature	Tc (op)		−20 ~ +100	°C
Storage temperature	Tstg		−40 ~ +110	°C

SEMICONDUCTOR DATA

MB501L (PLL unit IC1)

- Block diagram

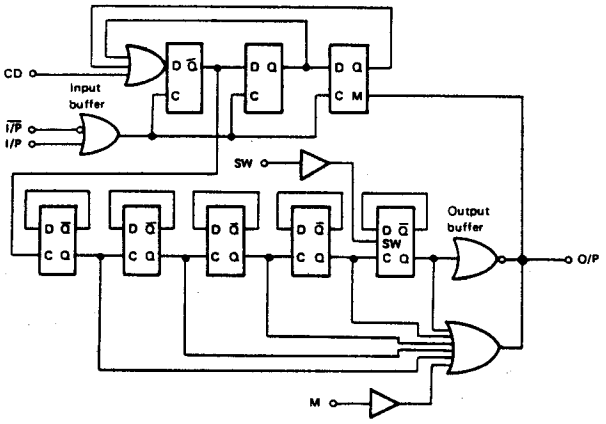

- Function table

SW	M	Division ratio
H	H	64
H	L	65
L	H	128
L	L	129

SW : H ; Vcc, L ; Open

M : H ; 2.0V~Vcc, L ; VEE~0.8V

- Terminal connection diagram

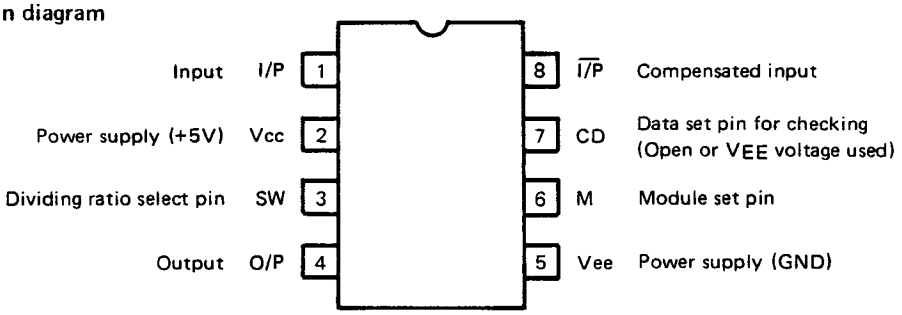

JLC1075F (PLL unit IC2)

- Block diagram

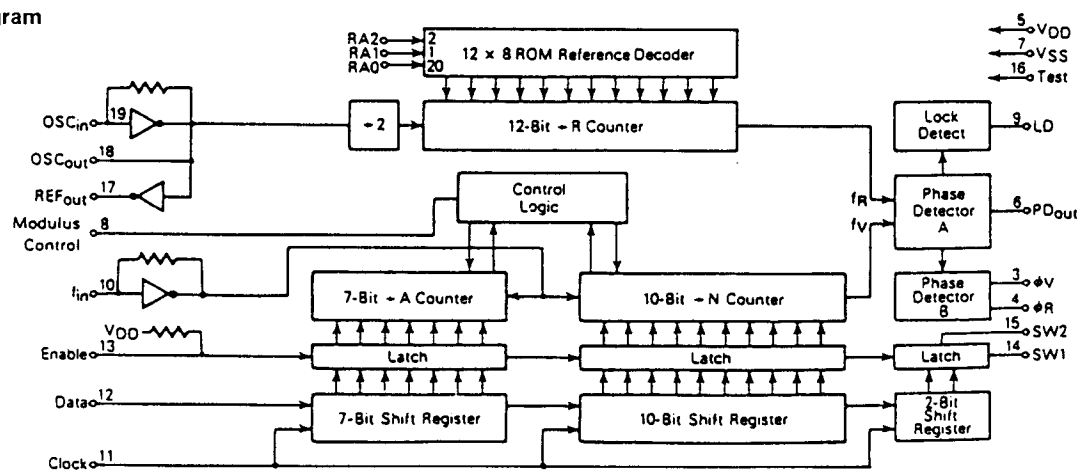

- Terminal connection diagram

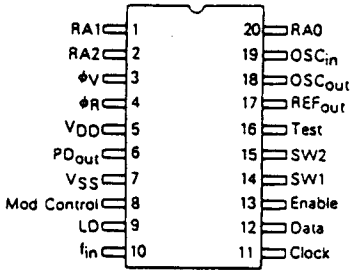

- Total division ratio

Reference address code			Total
RA2	RA1	RA0	division ratio
0	0	0	8
0	0	1	64
0	1	0	128
0	1	1	256
1	0	0	1160
1	0	1	2560
1	1	0	1024
1	1	1	2048

SEMICONDUCTOR DATA/DESCRIPTION OF COMPONENTS

TK10486MT1 (IF unit IC1)

- Block diagram

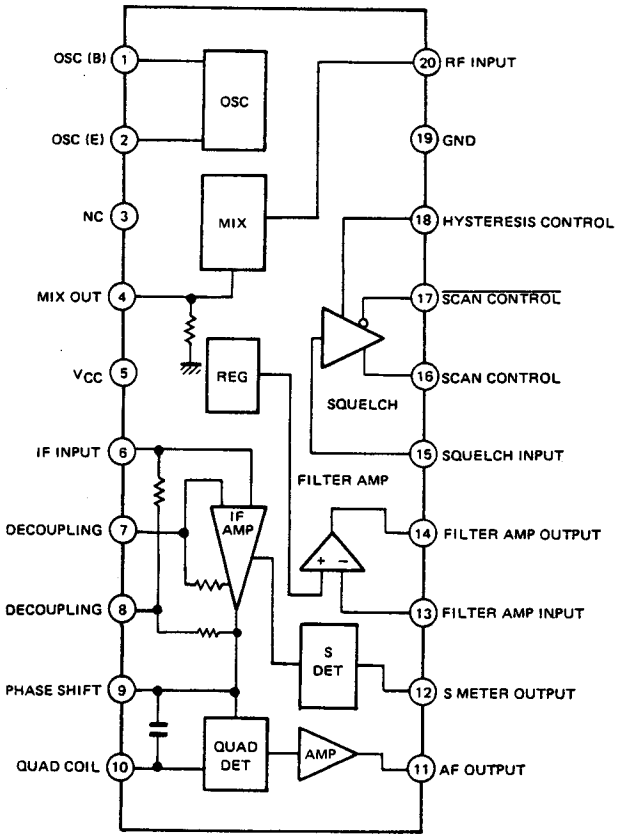

NJM386BM (AF AMP. unit IC1)

- Equivalent circuit

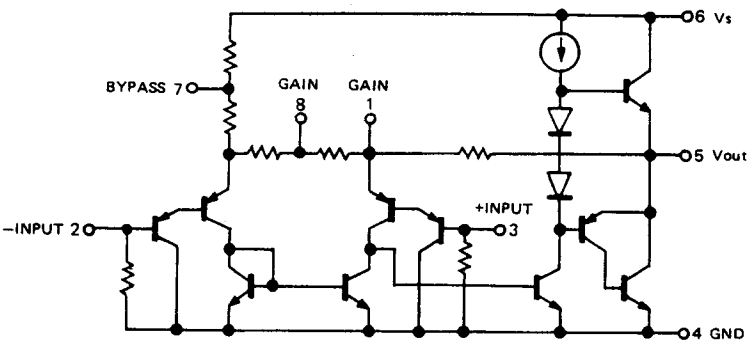

- Electrical characteristics

Item	Symbol	Rating			Unit	Condition
		MIN.	TYP.	MAX.		
Supply voltage	Vs	4	–	18	V	
Output power	Pour	500	850	–	mW	Vs = 9V, RL = 8Ω, THD = 10%
Voltage gain	Av		46		dB	f = 1kHz, Between 1 and 8 : Connect capacitor (10μF).
Bandwidth	BW		600		kHz	Between 1 and 8 : Open.
Distortion	THD		0.2		%	f = 1kHz, Pour = 125mW,
Input resistance	RIN		50		kΩ	RL = 8Ω

Description of Components

TX-RX UNIT (X57-3250-XX)

Component	Part No.	Operation/Condition/Compatibility
Q1	DTA114YU	Unlock detection switch ; low when locked.
Q2	2SC4093	Frequency multiplication (x 2) and amplification.
Q3, 5	2SC4093	Drive-stage amplifier.
Q4	DTC144EU	Transmission/reception HET selection switch ; ON during reception.
Q6, 7	2SC4095	RF amplifier.
Q8	2SC3585	RX 1st mixer.
Q9	2SC2714(O)	1st IF amplifier, 59.7MHz.
Q10	2SJ144(GR)	AF muting switch (MU2).
IC1	M57787	Power amplifier.
IC2	MD-004	Antenna switch.
D1, 2	MA77	Transmission/reception HET selection switch.
D3	DA204K	Bias setting for Q5.
D4	HSM88AS	Power detection.
D5	MA110	Backflow prevention.

PARTS LIST

CAPACITORS CC 45 TH 1H 220 J
1 2 3 4 5 6

1 = Type ..... ceramic, electrolytic, etc.
2 = Shape .....round, square, etc.
3 = Temp. coefficient
4 = Voltage rating
5 = Value
6 = Tolerance

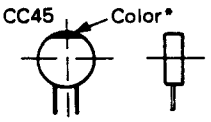

- **Capacitor value**

0 1 0 = 1pF
1 0 0 = 10pF
1 0 1 = 100pF
1 0 2 = 1000pF = 0.001μF
1 0 3 = 0.01μF

2 2 0 = 22pF
1st number | Multiplier
2nd number

- **Temperature Coefficient**

1st Word	C	L	P	R	S	T	U
Color*	Black	Red	Orange	Yellow	Green	Blue	Violet
ppm/°C	0	−80	−150	−220	−330	−470	−750

2nd Word	G	H	J	K	L
ppm/°C	± 30	± 60	± 120	± 250	± 500

Example CC45TH = −470 ± 60 ppm/°C

- **Tolerance**

Code	C	D	G	J	K	M	X	Z	P	No code
(%)	± 0.25	± 0.5	± 2	± 5	± 10	± 20	+ 40 −20	+ 80 −20	+ 100 −0	More than 10μF −10~ + 50; Less than 4.7μF −10~ + 75

Less than 10 pF

Code	B	C	D	F	G
(pF)	± 0.1	± 0.25	± 0.5	± 1	± 2

- **Rating voltage**

1st word \ 2nd word	A	B	C	D	E	F	G	H	J	K	V
0	1.0	1.25	1.6	2.0	2.5	3.15	4.0	5.0	6.3	8.0	–
1	10	12.5	16	20	25	31.5	40	50	63	80	35
2	100	125	160	200	250	315	400	500	630	800	–
3	1000	1250	1600	2000	2500	3150	4000	5000	6300	8000	–

- **Chip capacitors**

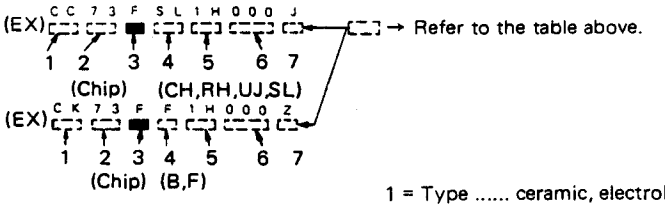

Dimension

Dimension code	L	W	T
Empty	5.6 ± 0.5	5.0 ± 0.5	Less than 2.0
E	3.2 ± 0.2	1.6 ± 0.2	Less than 1.25
F	2.0 ± 0.3	1.25 ± 0.2	Less than 1.25

RESISTORS

- **Chip resistor (Carbon)**

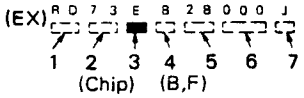

1 = Type ..... ceramic, electrolytic, etc.
2 = Shape ..... round, square, etc.
3 = Dimension
4 = Temp. coefficient
5 = Voltage rating
6 = Value
7 = Tolerance.

Dimension

Dimension code	L	W	T	Wattage
E	3.2 ± 0.2	1.6 ± 0.2	0.57	2B
F	2.0 ± 0.3	1.25 ± 0.2	0.45	2A

- **Carbon resistor (Normal type)**

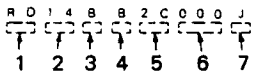

Rating wattage

Cord	Wattage	Cord	Wattage	Cord	Wattage
2A	1 /10W	2E	1/ 4W	3A	1W
2B	1/ 8W	2H	1/ 2W	3D	2W
2C	1/ 6W				

Dimension

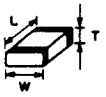

PARTS LIST

* New Parts
Parts without Parts No. are not supplied.
Les articles non mentionnes dans le Parts No. ne sont pas fournis.
Teile ohne Parts No. werden nicht geliefert.

Ref. No. 参照番号	Address 位置	New Parts 新	Parts No. 部品番号	Description 部品名／規格	Destination 仕向	Remarks 備考
			TH-55AT/E			
1	3B	*	A01-1050-02	METALLIC CABINET(REAR)		
2	1A	*	A02-0846-03	PLASTIC CABINET(FRONT)	AT	
2	1A	*	A02-0847-03	PLASTIC CABINET(FRONT)	E	
3	2B		A11-0406-04	SUB CHASSIS ASSY(ENCODER)		
4	2B	*	A11-0407-04	SUB CHASSIS ASSY(VOL)		
5	2A		A20-2625-03	PANEL ASSY		
6	3B		A40-0621-04	BOTTOM PLATE		
7	3B	*	B40-3806-04	MODEL NAME PLATE	AT	
7	3B	*	B40-3807-04	MODEL NAME PLATE	E	
8	3B		B42-2437-04	LABEL (SERIAL)		
9	1C		B42-3325-04	LABEL		
10	3B	*	B01-0664-03	ESCUTCHEON		
11	1B		B03-0547-04	DRESSING PLATE (DTMF)	AT	
11	1B	*	B03-0550-04	DRESSING PLATE	E	
12	2C		B09-0309-04	CAP (SP,MIC)		
13	2B		B10-0698-04	FRONT GLASS		
14	2B		B11-0449-04	FILTER		
15	1D		B46-0410-20	WARRANTY CARD	AT	
15	1D		B46-0419-00	WARRANTY CARD	E(W)	
16	1D	*	B50-8224-00	INSTRUCTION MANUAL		
19	3B		E23-0494-14	TERMINAL (-)		
20	3B		E23-0605-14	TERMINAL (+)		
21	3B		E04-0168-05	BNC RECEPTACLE		
22	2B	*	F11-1100-03	SHIELDING COVER(TX-RX)		
23	1A		F19-0650-04	BLIND PLATE (MIC)		
25	2A		F20-0594-04	INSULATING SHEET(CONTROL)		
26	2B	*	F20-0600-04	INSULATING SHEET(VR)		
27	3B	*	F20-1006-04	INSULATING SHEET(TX-RX)		
28	3B		F20-1008-04	INSULATING SHEET(BOTTOM PLATE)		
29	3B		F29-0435-05	INSULATOR (BELT HOOK)		
-			F20-0587-04	INSULATING SHEET(LITHIUM BATT)		
33	2A		G02-0505-05	SPRING (VOL,ENCODER)		
34	1A		G10-0657-04	FELT (SPEAKER)		
35	2A	*	G10-0670-04	NON-WOVEN FABRIC(CASE BOTTOM)		
36	3B		G13-0852-04	CUSHION		
37	3B		G16-0514-04	SHEET		
41	1D		H11-0808-14	POLYSTYRENE BOARD		
42	2D		H13-0801-04	PROTECTION BOARD		
43	2C		H13-0818-04	PROTECTION BOARD		
44	3C	*	H01-8174-02	ITEM CARTON BOX	AT	
44	3C	*	H01-8175-02	ITEM CARTON BOX	E	
45	3D	*	H10-2643-02	POLYSTYRENE FOAMED FIXTURE		
46	1D		H21-0715-04	PROTECTION SHEET		
48	1C		H25-0085-04	PROTECTION BAG (100X200)		
49	3B		J19-1426-03	HOLDER (POWER TERMINAL)		
50	1A		J21-4223-04	MOUNTING HARDWARE(CASE BOTTOM)		
51	1A	*	J21-4234-04	MOUNTING HARDWARE(SPEAKER)		
52	1A	*	J21-4235-04	MOUNTING HARDWARE(CASE SIDE)		
53	2C		J29-0424-04	BELT HOOK		
54	1A	*	J30-0550-04	SPACER (SPEAKER)		
55	1A		J31-0526-04	MIC SPACER		

E: Scandinavia & Europe K: USA P: Canada W:Europe
U: PX(Far East, Hawaii) T: England M: Other Areas
UE : AAFES(Europe) X: Australia

⚠ indicates safety critical components.

PARTS LIST

* New Parts
Parts without **Parts No.** are not supplied.
Les articles non mentionnes dans le **Parts No.** ne sont pas fournis.
Teile ohne **Parts No.** werden nicht geliefert.

Ref. No. 参照番号	Address 位置	New Parts 新	Parts No. 部品番号	Description 部品名／規格	Destination 仕向	Remarks 備考
56	2A		J69-0311-05	RING (BNC)		
57	2C		J69-0312-04	HAND STRAP		
-			J99-0311-04	ADHESIVE SHEET (LITHIUM BATT)		
60	3B		K27-0499-04	KNØB (LØ/HI)		
61	1B	*	K27-3029-04	KNØB (F.LØCK)		
62	2A		K29-3096-04	KNØB (VØL)		
63	2A		K29-3097-04	KNØB (SQL)		
64	2A		K29-3098-04	KNØB (ENCØDER)		
65	3B		K29-3100-04	KNØB (RELEASE)		
66	3B		K29-3102-03	KNØB (PTT)		
67	2A		K29-3103-04	KYE TØP (MHZ,MCH)		
68	3B		K29-3104-04	KYE TØP (REV,M)		
69	1A		K29-3105-04	KYE TØP (DTMF)	AT	
70	1B	*	K29-3141-04	KNØB (RIT)		
81	2A		N14-0534-04	NUT (VØL,ENCØDER)		
A	1B		N30-2020-41	PAN HEAD MACHINE SCREW		
B	2B		N32-2012-41	FLAT HEAD MACHINE SCREW		
C	3B		N33-2005-45	ØVAL HEAD MACHINE SCREW(BNC)		
D	1B,2B		N35-2004-41	BINDING HEAD MACHINE SCREW		
E	1B		N35-2006-41	BINDING HEAD MACHINE SCREW		
F	1B		N39-1450-45	PAN HEAD MACHINE SCREW (RIT)		
G	3B		N39-2040-45	PAN HEAD MACHINE SCREW		
H	1A		N89-2006-46	BINDING HEAD TAPTITE SCREW(SWU	NIT)	
I	2B		N09-0663-04	SCREW (M1.7X4)		
J	3B		N09-2022-05	SCREW (M2X4)		
K	3A,2B		N09-2023-05	SCREW (M2X3)		
L	3B		N09-2024-05	SCREW (Ø2X16)		
M	3B		N09-2025-05	SCREW (Ø1.7X3)		
N	1A		N09-2026-05	SCREW (Ø2X3.5)		
Q	3B		N09-2028-05	SCREW (M3X4)		
R1			RD14BB2B333J	RD 33K J 1/8W		
85	1A		T07-0251-05	LØUDSPEAKER		
86	2D	*	-T90-0364-05	ANTENNA		
87	1A		T91-0372-05	MICRØPHØNE		
89	2D		W09-0382-15	BATTERY CHARGER(120V)	AT	
89	2D		W09-0387-05	BATTERY CHARGER(240V)	E(T)	
89	2D		W09-0388-05	BATTERY CHARGER(220V)	E(W)	
90	2D		W09-0507-05	BATTERY ASSY (PB-6)		
-			W09-0394-05	LITHIUM BATTERY		
95	1A	*	X41-3070-00	SW UNIT	AT	
95	1A	*	X41-3070-61	SW UNIT	E	
96	1B	*	X43-3020-11	AVR		
97	1A	*	X52-3130-00	SIGNALING UNIT (DTMF)	AT	
98	2A	*	X53-3150-11	CØNTRØL UNIT	AT	
98	2A	*	X53-3150-51	CØNTRØL UNIT	E(T)	
98	2A	*	X53-3150-61	CØNTRØL UNIT	E(W)	
99	2B	*	X57-3250-11	TX.RX UNIT	AT	
99	2B	*	X57-3250-61	TX.RX UNIT	E	
SWITCH UNIT (X41-3070-XX) -00 : TH-55AT -61 : TH-55E						
C1 ,2		*	C92-0509-05	TANTAL 10UF 6.3WV		
C3			CC73FSL1H101J	CHIP C 100PF J		
C4			CK73EB1E104K	CHIP C 0.10UF K		

E: Scandinavia & Europe K: USA P: Canada W:Europe
U: PX(Far East, Hawaii) T: England M: Other Areas
UE: AAFES(Europe) X: Australia

⚠ indicates safety critical components.

PARTS LIST

* New Parts
Parts without **Parts No.** are not supplied.
Les articles non mentionnes dans le **Parts No.** ne sont pas fournis.
Teile ohne **Parts No.** werden nicht geliefert.

Ref. No. 参照番号	Address 位置	New Parts 新	Parts No. 部品番号	Description 部品名／規格	Destination 仕向	Remarks 備考
C5			CK73FB1E103K	CHIP C 0.010UF K		
C6 ,7			CC73FSL1H101J	CHIP C 100PF J	AT	
C8 -15			CC73FSL1H101J	CHIP C 100PF J		
J1			E11-0421-05	PHONE JACK		
J2			E11-0420-15	MIC JACK		
W1		*	E31-3387-05	CONNECTING WIRE		
W2		*	E31-3388-05	CONNECTING WIRE	AT	
JP1 -4			R92-1061-05	JUMPER REST 0 OHM		
JP5			R92-1061-05	JUMPER REST 0 OHM	E	
R1			RK73FB2A182J	CHIP R 1.8K J 1/10W		
R2			R92-0670-05	CHIP R 0 OHM		
R3			RK73FB2A271J	CHIP R 270 J 1/10W		
R4			RK73FB2A182J	CHIP R 1.8K J 1/10W		
R5			RK73FB2A471J	CHIP R 470 J 1/10W		
R6			RK73EB2B101J	CHIP R 100 J 1/8W		
R7			RK73FB2A152J	CHIP R 1.5K J 1/10W		
R8			RK73FB2A822J	CHIP R 8.2K J 1/10W		
R9			RK73FB2A473J	CHIP R 47K J 1/10W		
R10			RK73FB2A100J	CHIP R 10 J 1/10W		
R11			RK73FB2A102J	CHIP R 1.0K J 1/10W		
R12			R92-0670-05	CHIP R 0 OHM	AT	
R13			RK73FB2A562J	CHIP R 5.6K J 1/10W		
VR1		*	R12-2417-05	TRIMMING POT.(5K)		
VR2		*	R05-3445-05	POTENTIOMETER(10K)		
Q1			DTC144EK	DIGITAL TRANSISTOR	AT	
Q2			FMG2	DIGITAL TRANSISTOR	E	
Q3			DTC144EK	DIGITAL TRANSISTOR		
AVR UNIT (X43-3020-11)						
C1			C90-2073-05	ELECTRO 6.8UF 16WV		
C2 -4			CC73FSL1H101J	CHIP C 100PF J		
C5			C90-2053-05	ELECTRO 47UF 6.3WV		
C6 ,7			CC73FSL1H101J	CHIP C 100PF J		
C8			C92-0004-05	CHIP TAN 1UF 16WV		
C9 -14			CC73FSL1H101J	CHIP C 100PF J		
C15			C90-2049-05	ELECTRO 15UF 6.3WV		
C16 -20			CC73FSL1H101J	CHIP C 100PF J		
C22			CC73FSL1H101J	CHIP C 100PF J		
C30 -32			CC73FSL1H101J	CHIP C 100PF J		
CN1		*	E40-5165-05	PIN CONNECTOR		
L1 ,2			L92-0122-05	BEAD CORE		
R1			RK73FB2A332J	CHIP R 3.3K J 1/10W		
R2			RK73FB2A102J	CHIP R 1.0K J 1/10W		
R3			RK73FB2A472J	CHIP R 4.7K J 1/10W		
R4			RK73FB2A272J	CHIP R 2.7K J 1/10W		
R5			RK73FB2A472J	CHIP R 4.7K J 1/10W		
R6			RK73FB2A473J	CHIP R 47K J 1/10W		
R7			RK73FB2A272J	CHIP R 2.7K J 1/10W		
R8			RK73FB2A472J	CHIP R 4.7K J 1/10W		
R15			RK73FB2A124F	CHIP R 120K F 1/10W		
R16			RK73FB2A274F	CHIP R 270K F 1/10W		
IC1			LP2950CZ-5.0	IC(VOLTAGE REGULATOR/ +5V)		
Q1			2SB1182F5(Q)	CHIP TRANSISTOR		

E: Scandinavia & Europe K: USA P: Canada W:Europe
U: PX(Far East, Hawaii) T: England M: Other Areas
UE : AAFES(Europe) X: Australia

⚠ indicates safety critical components.

PARTS LIST

⁎ New Parts
Parts without **Parts No.** are not supplied.
Les articles non mentionnes dans le **Parts No.** ne sont pas fournis.
Teile ohne **Parts No.** werden nicht gellefert.

Ref. No. 参照番号	Address 位置	New Parts 新	Parts No. 部品番号	Description 部品名／規格	Destination 仕向	Remarks 備考
Q2			FMW1	DIGITAL TRANSISTOR		
Q3			DTC144EK	DIGITAL TRANSISTOR		
Q4			2SA1313(Y)	CHIP TRANSISTOR		
Q5			DTA143XK	DIGITAL TRANSISTOR		
Q6			DTA144EK	DIGITAL TRANSISTOR		
Q8			DTC144EK	DIGITAL TRANSISTOR		
SIGNALING UNIT (X52-3130-00) TH-55AT ONLY						
C1			CE04CW0J100M	ELECTRO 10UF 6.3WV	AT	
C2 -5			CC73FSL1H101J	CHIP C 100PF J	AT	
C6			CK73FB1H222K	CHIP C 2200PF K	AT	
C7			CK73EB1E104K	CHIP C 0.10UF K	AT	
C8			CK73FB1E103K	CHIP C 0.010UF K	AT	
C9			C92-0003-05	CHIP TAN 0.47UF 25WV	AT	
C10			C92-0009-05	CHIP TAN 4.7UF 10WV	AT	
C11 ,12			CC73FSL1H101J	CHIP C 100PF J	AT	
C13			C92-0009-05	CHIP TAN 4.7UF 10WV	AT	
X1			L78-0035-05	RESONATOR	AT	
R1			RK73FB2A222J	CHIP R 2.2K J 1/10W	AT	
R2			RK73FB2A103J	CHIP R 10K J 1/10W	AT	
R3			RK73FB2A472J	CHIP R 4.7K J 1/10W	AT	
R4			RK73FB2A122J	CHIP R 1.2K J 1/10W	AT	
R5			RK73FB2A563J	CHIP R 56K J 1/10W	AT	
R6			R92-0670-05	CHIP R 0 OHM	AT	
R7			RK73FB2A101J	CHIP R 100 J 1/10W	AT	
VR1			R12-3449-05	TRIMMING POT. 10K	AT	
IC1			LR40872	IC(TONE DIALER)	AT	
Q1			2SC2712(GR)	CHIP TRANSISTOR	AT	
Q2			DTA114EK	DIGITAL TRANSISTOR	AT	
CONTROL UNIT (X53-3150-XX) -11 : K -51 : T -61 : W						
103	2A		A33-0409-04	REFLECTOR		
C1			CK73FB1E223K	CHIP C 0.022UF K		
C2			CK73FB1E103K	CHIP C 0.010UF K		
C3			C92-0010-05	CHIP TAN 6.8UF 6.3WV		
C4			CK73FB1H102K	CHIP C 1000PF K		
C5 -7			CK73FB1E103K	CHIP C 0.010UF K		
C11			CC73FSL1H101J	CHIP C 100PF J		
107	2A		E29-0478-04	CONNECTOR		
111	2A		J21-4220-04	MOUNTING HARDWARE		
X1			L78-0036-05	RESONATOR 4.19MHZ		
R1			RK73FB2A563J	CHIP R 56K J 1/10W		
R2			RK73FB2A183J	CHIP R 18K J 1/10W		
R3			RK73FB2A333J	CHIP R 33K J 1/10W		
R4			RK73FB2A473J	CHIP R 47K J 1/10W		
R5			RK73FB2A472J	CHIP R 4.7K J 1/10W		
R6 ,7			RK73FB2A473J	CHIP R 47K J 1/10W		
R8			RK73FB2A331J	CHIP R 330 J 1/10W		
R9			RK73FB2A562J	CHIP R 5.6K J 1/10W		
R10			RK73FB2A103J	CHIP R 10K J 1/10W		
R11 -15			RK73FB2A473J	CHIP R 47K J 1/10W		

E: Scandinavia & Europe K: USA P: Canada W: Europe
U: PX(Far East, Hawaii) T: England M: Other Areas
UE: AAFES(Europe) X: Australia

⚠ indicates safety critical components.

PARTS LIST

⁎ New Parts
Parts without **Parts No.** are not supplied.
Les articles non mentionnes dans le **Parts No.** ne sont pas fournis.
Teile ohne **Parts No.** werden nicht geliefert.

Ref. No. 参照番号	Address 位置	New Parts 新	Parts No. 部品番号	Description 部品名／規格	Destination 仕向	Remarks 備考
R16			RK73FB2A184J	CHIP R 180K J 1/10W		
R17			RK73FB2A390J	CHIP R 39 J 1/10W		
R18			R92-0670-05	CHIP R 0 ΩHM	E	
R21			R92-0670-05	CHIP R 0 ΩHM	AT	
R22			R92-0670-05	CHIP R 0 ΩHM	E	
R23			R92-0670-05	CHIP R 0 ΩHM		
R25			R92-0670-05	CHIP R 0 ΩHM	E(W)	
R26			R92-0670-05	CHIP R 0 ΩHM	E	
R27 ,28			R92-0670-05	CHIP R 0 ΩHM		
R32			RK73FB2A102J	CHIP R 1.0K J 1/10W		
R33			RK73FB2A101J	CHIP R 100 J 1/10W		
R34			RK73FB2A100J	CHIP R 10 J 1/10W		
R35			R92-0670-05	CHIP R 0 ΩHM		
R37			RK73FB2A123J	CHIP R 12K J 1/10W	E	
S1 -3			S40-1415-05	PUSH SWITCH (MΩNI,LAMP,PTT)		
S4			S31-1420-05	SLIDE SWITCH (F.LΩCK)		
S5			S31-2414-05	SLIDE SWITCH (LΩ/HI)		
115	2A		FTD8608	LCD		
D1 ,2			1SS184	DIΩDE		
D3 ,4			1SS181	DIΩDE		
D5			SLH34VC3	LED (TX)		
D6 ,7			LN01301C(Q)	LED		
IC1			LH5008TP	IC(LCD CΩNTRΩLLER/ DRIVER)		
IC2		⁎	75108AG-028-22	IC(MICRΩPRΩCESSΩR)		
IC3			S8054ALR	IC(RESET IC)		
Q1			2SC2712(Y)	TRANSISTΩR		
Q2			2SA1162(Y)	TRANSISTΩR		
119	2B		W02-0400-05	ENCΩDER		
TX-RX UNIT (X57-3250-XX) -11 : TH-55AT -61 : TH-55E						
C1 -5			CC73FSL1H101J	CHIP C 100PF J		
C6			C92-0004-05	CHIP TAN 1UF 16WV		
C7			C90-1408-05	ELECTRΩ 220UF 6.3WV		
C8			C90-2053-05	ELECTRΩ 47UF 6.3WV		
C9			CK73FB1H471K	CHIP C 470PF K		
C10			CC73FCH1H1R5C	CHIP C 1.5PF C		
C11			CK73FB1E103K	CHIP C 0.010UF K		
C12			CK73FB1H471K	CHIP C 470PF K		
C13			CC73FSL1H101J	CHIP C 100PF J		
C14			C90-2053-05	ELECTRΩ 47UF 6.3WV		
C15			CC73FSL1H101J	CHIP C 100PF J		
C16			CC73FCH1H020C	CHIP C 2.0PF C		
C18 -20			CC73FSL1H101J	CHIP C 100PF J		
C21			CK73FB1H471K	CHIP C 470PF K		
C22			CK73FB1E103K	CHIP C 0.010UF K		
C23			CC73FCH1H020C	CHIP C 2.0PF C		
C24			CK73FB1E103K	CHIP C 0.010UF K		
C25 -27			CC73FSL1H101J	CHIP C 100PF J		
C28			CC73FCH1H040C	CHIP C 4.0PF C		
C29			CK73FB1H471K	CHIP C 470PF K		
C30			CK73FB1E103K	CHIP C 0.010UF K		
C31			CK73EB1E104K	CHIP C 0.10UF K		
C32			CK73FB1E103K	CHIP C 0.010UF K		
C33			CC73FSL1H101J	CHIP C 100PF J		
C34			C90-2041-05	ELECTRΩ 10UF 10WV		

E: Scandinavia & Europe K: USA P: Canada W:Europe
U: PX(Far East, Hawaii) T: England M: Other Areas
UE : AAFES(Europe) X: Australia

⚠ indicates safety critical components.

PARTS LIST

* New Parts
Parts without **Parts No.** are not supplied.
Les articles non mentionnes dans le **Parts No.** ne sont pas fournis.
Telle ohne **Parts No.** werden nicht gellefert.

Ref. No. 参照番号	Address 位置	New Parts 新	Parts No. 部品番号	Description 部品名／規格	Destination 仕向	Remarks 備考
C35			CC73FSL1H101J	CHIP C 100PF J		
C36			CK73FB1E103K	CHIP C 0.010UF K		
C37			CK73EB1E104K	CHIP C 0.10UF K		
C38			C90-2039-05	ELECTRO 15UF 16WV		
C39			CC73FSL1H101J	CHIP C 100PF J		
C40			CK73FB1E103K	CHIP C 0.010UF K		
C41			CK73EB1E104K	CHIP C 0.10UF K		
C42			C90-2041-05	ELECTRO 10UF 10WV		
C43 -45			CC73FSL1H101J	CHIP C 100PF J		
C46			CC73FCH1H010C	CHIP C 1.0PF C		
C47 ,48			CC73FSL1H101J	CHIP C 100PF J		
C49			CK73FB1H102K	CHIP C 1000PF K		
C50 ,51			CC73FCH1H040C	CHIP C 4.0PF C		
C52			CC73FCH1H070D	CHIP C 7.0PF D		
C53			CK73FB1H471K	CHIP C 470PF K		
C54			CC73FSL1H101J	CHIP C 100PF J		
C55			CC73FCH1H010C	CHIP C 1.0PF C		
C56			CK73FB1E103K	CHIP C 0.010UF K		
C57 ,58			CC73FSL1H101J	CHIP C 100PF J		
C59			CC73GCH1H040C	CHIP C 4.0PF C		
C60			CC73FSL1H101J	CHIP C 100PF J		
C61			CC73FCH1H1R5C	CHIP C 1.5PF C		
C62			CK73FB1E103K	CHIP C 0.010UF K		
C63 ,64			CC73FSL1H101J	CHIP C 100PF J		
C65			CC73FCH1H0R5C	CHIP C 0.5PF C		
C66			CC45FCH1H120J	CERAMIC 12PF J		
C67			CK73FB1E103K	CHIP C 0.010UF K		
C68			CC73FCH1H080D	CHIP C 8.0PF D		
C69			CK73FB1E103K	CHIP C 0.010UF K		
C70			CC73FCH1H050C	CHIP C 5.0PF C		
C71			CK73FB1E103K	CHIP C 0.010UF K		
C72			C90-2050-05	ELECTRO 33UF 6.3WV		
C73			CK73FB1E273K	CHIP C 0.027UF K		
C74			C90-2053-05	ELECTRO 47UF 6.3WV		
C75			C90-2052-05	ELECTRO 68UF 10WV		
C77 -79			CC73FSL1H101J	CHIP C 100PF J		
C80			CC73FCH1H1R5C	CHIP C 1.5PF C		
C81			CC73FCH1H020C	CHIP C 2.0PF C		
C82			CC73FCH1H1R5C	CHIP C 1.5PF C		
C83			CC73FSL1H101J	CHIP C 100PF J		
A3		*	E29-0479-04	GND TERMINAL (P.MODULE)		
CN1			E40-5128-05	FPC CONNECTOR (20P)		
CN2		*	E40-5164-05	PIN CONNECTOR (8P)		
CN3			E40-5127-05	PIN CONNECTOR (7P)		
W1		*	E31-3393-05	CONNECTING WIRE(11P-AVR)		
W2		*	E31-3394-05	CONNECTING WIRE(5P-AF,SQ)		
W3		*	E31-3395-05	CONNECTING WIRE(CTCSS)		
A2	2B	*	F11-1104-04	SHIELDING COVER(P.MODULE)		
A4		*	F11-1101-04	SHIELDING COVER(LPF)		
A6		*	F20-0594-04	INSULATING SHEET(FPC-CTCSS)		
A7		*	F10-1372-04	SHIELDING PLATE(DRIVER)		
A1	2B	*	J21-4236-04	MOUNTING HARDWARE(P.MODULE)		
L1			L92-0123-05	BEAD CORE		

E: Scandinavia & Europe K: USA P: Canada W:Europe
U: PX(Far East, Hawaii) T: England M: Other Areas
UE: AAFES(Europe) X: Australia

⚠ indicates safety critical components.

PARTS LIST

* New Parts
Parts without **Parts No.** are not supplied.
Les articles non mentionnes dans le **Parts No.** ne sont pas fournis.
Teile ohne **Parts No.** werden nicht geliefert.

Ref. No. 参照番号	Address 位置	New Parts 新	Parts No. 部品番号	Description 部品名／規格	Destination 仕向	Remarks 備考
L2			L92-0122-05	BEAD CORE		
L3			L40-1021-14	SMALL FIXED INDUCTOR(1MH)		
L4			L92-0123-05	BEAD CORE		
L5			L92-0122-05	BEAD CORE		
L6			L40-1021-14	SMALL FIXED INDUCTOR(1MH)		
L7 ,8		*	L92-0124-05	FERRITE CHIP		
L9		*	L33-0710-05	CHOKE COIL		
L11		*	L34-1230-05	COIL		
L12		*	L79-0830-05	FILTER (HELICAL)		
L13		*	L79-0829-05	FILTER (HELICAL)		
L14		*	L34-4090-05	COIL		
L15			L40-3372-80	SMALL FIXED INDUCTOR(33NH)		
L16 ,17			L92-0123-05	BEAD CORE		
L18			L92-0122-05	BEAD CORE		
X1		*	L77-1379-05	CRYSTAL RESONATOR 59.245MHZ		
XF1 ,2			L71-0280-05	MCF 59.7MHZ		
P	2B	*	N09-2034-05	SCREW (M2.6X5)		
CP1		*	R90-0706-05	MULTI-COMP 10KX5		
JP1 -3			R92-1061-05	JUMPER REST 0 OHM		
R1			RK73FB2A680J	CHIP R 68 J 1/10W		
R2			RK73FB2A474J	CHIP R 470K J 1/10W		
R3			RK73FB2A473J	CHIP R 47K J 1/10W		
R5			RK73FB2A393J	CHIP R 39K J 1/10W		
R6			RK73FB2A103J	CHIP R 10K J 1/10W		
R7			RK73FB2A473J	CHIP R 47K J 1/10W		
R8			RK73FB2A822J	CHIP R 8.2K J 1/10W		
R9			RK73FB2A391J	CHIP R 390 J 1/10W		
R10			RK73FB2A331J	CHIP R 330 J 1/10W		
R11			RK73FB2A100J	CHIP R 10 J 1/10W		
R12			RK73FB2A331J	CHIP R 330 J 1/10W		
R13			RK73FB2A102J	CHIP R 1.0K J 1/10W		
R14			RK73FB2A470J	CHIP R 47 J 1/10W		
R15			RK73FB2A100J	CHIP R 10 J 1/10W		
R16			RK73FB2A471J	CHIP R 470 J 1/10W		
R17			RK73FB2A390J	CHIP R 39 J 1/10W		
R18			RK73FB2A220J	CHIP R 22 J 1/10W		
R19			RK73FB2A102J	CHIP R 1.0K J 1/10W		
R20			RK73FB2A103J	CHIP R 10K J 1/10W		
R21 ,22			RK73FB2A101J	CHIP R 100 J 1/10W		
R23			RK73FB2A272J	CHIP R 2.7K J 1/10W		
R25			RK73FB2A103J	CHIP R 10K J 1/10W		
R26			RK73FB2A471J	CHIP R 470 J 1/10W		
R27			RK73FB2A150J	CHIP R 15 J 1/10W		
R28			RK73FB2A120J	CHIP R 12 J 1/10W		
R29			RK73FB2A153J	CHIP R 15K J 1/10W		
R30			RK73FB2A150J	CHIP R 15 J 1/10W		
R31			RK73FB2A681J	CHIP R 680 J 1/10W		
R32			RD14BB2C822J	RD 8.2K J 1/6W		
R33			RK73FB2A334J	CHIP R 330K J 1/10W		
R34			RK73FB2A103J	CHIP R 10K J 1/10W		
R35			RK73FB2A222J	CHIP R 2.2K J 1/10W		
R36			RK73FB2A331J	CHIP R 330 J 1/10W		
R37			RK73FB2A334J	CHIP R 330K J 1/10W		

E: Scandinavia & Europe K: USA P: Canada W:Europe
U: PX(Far East, Hawaii) T: England M: Other Areas
UE : AAFES(Europe) X: Australia

⚠ indicates safety critical components.

PARTS LIST

* New Parts
Parts without **Parts No.** are not supplied.
Les articles non mentionnes dans le **Parts No.** ne sont pas fournis.
Teile ohne **Parts No.** werden nicht geliefert.

Ref. No. 参照番号	Address 位置	New Parts 新	Parts No. 部品番号	Description 部品名／規格	Destination 仕向	Remarks 備考
R38			RK73FB2A222J	CHIP R 2.2K J 1/10W		
R39			RK73FB2A104J	CHIP R 100K J 1/10W		
R40			RK73FB2A105J	CHIP R 1.0M J 1/10W		
R41			RK73FB2A222J	CHIP R 2.2K J 1/10W		
R42			RK73FB2A153J	CHIP R 15K J 1/10W		
R50 ,51			R92-0670-05	CHIP R 0 OHM		
R52			RK73FB2A332J	CHIP R 3.3K J 1/10W		
R53			RK73FB2A392J	CHIP R 3.9K J 1/10W		
R54			RK73FB2A472J	CHIP R 4.7K J 1/10W		
VR1	2A		R23-9403-05	POTENTIOMETER10K/50K(AF,SQ)		
D1 ,2		*	MA77	CHIP DIODE		
D3			DA204K	CHIP DIODE		
D4			HSM88AS	CHIP DIODE		
D5			MA110	CHIP DIODE		
D6		*	MA77	CHIP DIODE		
IC1		*	M57787	IC(POWER MODULE/ 1.24-1.3GHZ)		
IC2		*	MD-004	IC(ANTENNA CONTROL)		
Q1		*	DTA114YU	DIGITAL TRANSISTOR		
Q2 ,3			2SC4093(R27)	CHIP TRANSISTOR		
Q5			2SC4093(R27)	CHIP TRANSISTOR		
Q6 ,7		*	2SC4095(R47.6)	CHIP TRANSISTOR		
Q8		*	2SC3585(R44.3)	CHIP TRANSISTOR		
Q9			2SC2714(O)	CHIP TRANSISTOR		
Q10		*	2SJ144(GR)	CHIP FET		
127		*	X58-3210-01	IF UNIT		
128		*	X58-3360-00	PLL,VCO UNIT		
129		*	X58-3370-11	MIC AMP UNIT	AT	
129		*	X58-3370-61	MIC AMP UNIT	E	
130		*	X58-3380-00	AF UNIT		
131		*	X59-3420-00	APC UNIT		
132		*	X59-3430-00	BPF UNIT		
IF UNIT (X58-3210-01)						
C1			CK73EB1E104K	CHIP C 0.10UF K		
C2			C92-0004-05	CHIP TAN 1UF 16WV		
C3			C92-0005-05	CHIP-TAN 2.2UF 6.3WV		
C4			CK73FB1E223K	CHIP C 0.022UF K		
C5 -8			CK73FB1H102K	CHIP C 1000PF K		
C10			CK73FB1H102K	CHIP C 1000PF K		
C11			C92-0001-05	CHIP TAN 0.1UF 35WV		
C13			C92-0005-05	CHIP-TAN 2.2UF 6.3WV		
C14			CC73FCH1H150J	CHIP C 15PF J		
C15			CC73FCH1H220J	CHIP C 22PF J		
C16			CK73FB1E103K	CHIP C 0.010UF K		
C17 -19			CK73EB1E104K	CHIP C 0.10UF K		
C20			CC73FCH1H820J	CHIP C 82PF J		
C21			CK73FB1E103K	CHIP C 0.010UF K		
			E23-0610-05	TERMINAL		
CD1			L79-0817-05	CERAMIC DISCRIMNATER(CDBM455C7		
CF1			L72-0362-05	CERAMIC FILTER (CFUM455E)		
L1			L40-3982-81	SMALL FIXED INDUCTOR(0.39UH)		
R1			RK73FB2A152J	CHIP R 1.5K J 1/10W		
R2			RK73FB2A332J	CHIP R 3.3K J 1/10W		
R3			RK73FB2A102J	CHIP R 1.0K J 1/10W		

E: Scandinavia & Europe K: USA P: Canada W:Europe
U: PX(Far East, Hawaii) T: England M: Other Areas
UE: AAFES(Europe) X: Australia

⚠ indicates safety critical components.

PARTS LIST

* New Parts
Parts without Parts No. are not supplied.
Les articles non mentionnes dans le Parts No. ne sont pas fournis.
Teile ohne Parts No. werden nicht geliefert.

Ref. No. 参照番号	Address 位置	New Parts 新	Parts No. 部品番号	Description 部品名／規格	Destination 仕向	Remarks 備考
R4			RK73FB2A274J	CHIP R 270K J 1/10W		
R5			RK73FB2A473J	CHIP R 47K J 1/10W		
R6			RK73FB2A102J	CHIP R 1.0K J 1/10W		
R7			RK73FB2A332J	CHIP R 3.3K J 1/10W		
R8			RK73FB2A472J	CHIP R 4.7K J 1/10W		
R9			RK73FB2A561J	CHIP R 560 J 1/10W		
R10			RK73FB2A103J	CHIP R 10K J 1/10W		
R11			RK73FB2A122J	CHIP R 1.2K J 1/10W		
R12			RK73FB2A222J	CHIP R 2.2K J 1/10W		
R14			RK73FB2A681J	CHIP R 680 J 1/10W		
R15			RK73FB2A101J	CHIP R 100 J 1/10W		
TH1			R92-0680-05	FIXED RESISTOR(7.5K)		
VR1		*	R12-5425-05	TRIMMING POT.(150K)S METER		
D1			HSM88AS	CHIP DIODE		
IC1		*	TK10486MT1(B,C)	IC(FM IF)		
Q1			2SC2712(GR)	CHIP TRANSISTOR		
PLL UNIT (X58-3360-00)						
C1			CK73GB1E103K	CHIP C 0.010UF K		
C2		*	CK73GB1H471K	CHIP C 470PF K		
C3		*	CC73GCH1H060D	CHIP C 6.0PF D		
C4			CK73GB1H102K	CHIP C 1000PF K		
C5			CC73GCH1H180J	CHIP C 18PF J		
C6			CC73GCH1H120J	CHIP C 12PF J		
C7			CC73GCH1H470J	CHIP C 47PF J		
C8			CC73GCH1H560J	CHIP C 56PF J		
C9 ,10			CK73GB1E103K	CHIP C 0.010UF K		
C11			CC73GCH1H220J	CHIP C 22PF J		
C12		*	CK73GB1H471K	CHIP C 470PF K		
C13			C92-0509-05	TANTAL 10UF 6.3WV		
C14			CK73GB1E103K	CHIP C 0.010UF K		
C15			CK73FB1E333K	CHIP C 0.033UF K		
C16		*	CK73GB1H222K	CHIP C 2200PF K		
C17			CK73GB1E103K	CHIP C 0.010UF K		
C18			C92-0509-05	TANTAL 10UF 6.3WV		
C19			CC73FSL1H101J	CHIP C 100PF J		
C20			C92-0003-05	CHIP TAN 0.47UF 25WV		
C24			C92-0504-05	CHIP-TAN 0.68UF 20WV		
C25			C92-0502-05	ELECTRO 0.33UF 35WV		
TC1		*	C05-0361-05	TRIMMING CAP 20PF		
			E23-0603-05	TERMINAL		
A1		*	F11-1102-03	SHIELDING CASE		
A2		*	F11-1103-04	SHIELDING COVER		
L1			L40-2272-80	SMALL FIXED INDUCTOR(22NH)		
X1		*	L77-1378-05	CRYSTAL RESONATOR(12.8MHZ)		
JP1 -3			R92-1061-05	JUMPER REST 0 OHM		
R1			RK73GB1J471J	CHIP R 470 J 1/16W		
R2			RK73GB1J151J	CHIP R 150 J 1/16W		
R3			RK73GB1J153J	CHIP R 15K J 1/16W		
R4			RK73GB1J102J	CHIP R 1.0K J 1/16W		
R5			RK73GB1J473J	CHIP R 47K J 1/16W		
R6			RK73GB1J333J	CHIP R 33K J 1/16W		
R7			RK73GB1J153J	CHIP R 15K J 1/16W		

E: Scandinavia & Europe K: USA P: Canada W: Europe
U: PX(Far East, Hawaii) T: England M: Other Areas
UE: AAFES(Europe) X: Australia

⚠ indicates safety critical components.

PARTS LIST

* New Parts
Parts without Parts No. are not supplied.
Les articles non mentionnes dans le Parts No. ne sont pas fournis.
Teile ohne Parts No. werden nicht geliefert.

Ref. No. 参照番号	Address 位置	New Parts 新	Parts No. 部品番号	Description 部品名／規格	Destination 仕向	Remarks 備考
R8			RK73GB1J103J	CHIP R 10K J 1/16W		
R9			RK73GB1J223J	CHIP R 22K J 1/16W		
R10			RK73GB1J102J	CHIP R 1.0K J 1/16W		
R11		*	RK73GB1J101J	CHIP R 100 J 1/16W		
R12 ,13			RK73GB1J222J	CHIP R 2.2K J 1/16W		
R14			RK73GB1J103J	CHIP R 10K J 1/16W		
R15		*	RK73GB1J101J	CHIP R 100 J 1/16W		
R16			RK73GB1J472J	CHIP R 4.7K J 1/16W		
R17			RK73GB1J394J	CHIP R 390K J 1/16W		
R18			RK73GB1J103J	CHIP R 10K J 1/16W		
R19 ,20			RD14BB2C103J	RD 10K J 1/6W		
R21			RK73GB1J222J	CHIP R 2.2K J 1/16W		
R22			RK73GB1J472J	CHIP R 4.7K J 1/16W		
D1		*	MA360	CHIP DIODE		
IC1		*	MB501LL	IC(PRE SCALER)		
IC2			JLC1075F	IC(PLL FREQ SYNTHESIZER)		
Q1			2SC4093(R26,27)	CHIP TRANSISTOR		
Q2		*	DTA144EU	DIGITAL TRANSISTOR		
Q3			2SJ144(GR)	CHIP FET		
Q4		*	2SC3624(L18)	CHIP TRANSISTOR		
Q5			2SC2712(GR)	CHIP TRANSISTOR		
TH1		*	159-153-85013	THERMISTER 15K		
		*	X59-3470-00	VCO UNIT		
MIC AMP UNIT (X58-3370-XX) -11 : TH-55AT -61 : TH-55E						
C1			C92-0002-05	CHIP TAN 0.22UF 35WV		
C2			CK73FB1E223K	CHIP C 0.022UF K		
C3 ,4			CC73FSL1H101J	CHIP C 100PF J		
C5 ,6			C92-0005-05	CHIP-TAN 2.2UF 6.3WV		
C7			CK73FB1E103K	CHIP C 0.010UF K		
C8			CC73FSL1H151J	CHIP C 150PF J		
C9			CK73FB1H182K	CHIP C 1800PF K		
C10			C92-0507-05	CHIP TAN 4.7UF 6.3WV		
C11			CK73FB1E103K	CHIP C 0.010UF K		
C12 ,13			CK73FB1E473M	CHIP C 0.047UF M	E	
C13			CK73FB1E103K	CHIP C 0.010UF K	AT	
C14			CK73FB1E103K	CHIP C 0.010UF K		
			E23-0610-05	TERMINAL		
R1			RK73FB2A104J	CHIP R 100K J 1/10W	AT	
R1			RK73FB2A334J	CHIP R 330K J 1/10W	E	
R2			RK73FB2A272J	CHIP R 2.7K J 1/10W		
R3			RK73FB2A103J	CHIP R 10K J 1/10W		
R4			RK73FB2A472J	CHIP R 4.7K J 1/10W		
R5			RK73FB2A391J	CHIP R 390 J 1/10W		
R6			RK73FB2A154J	CHIP R 150K J 1/10W	E	
R6			RK73FB2A823J	CHIP R 82K J 1/10W	AT	
R7			RK73FB2A472J	CHIP R 4.7K J 1/10W		
R8			RK73FB2A100J	CHIP R 10 J 1/10W		
R9			RK73FB2A273J	CHIP R 27K J 1/10W		
R10			RK73FB2A223J	CHIP R 22K J 1/10W		
R11 ,12			RK73FB2A104J	CHIP R 100K J 1/10W		
R13			RK73FB2A472J	CHIP R 4.7K J 1/10W		
R14			RK73FB2A104J	CHIP R 100K J 1/10W		

E: Scandinavia & Europe K: USA P: Canada W:Europe
U: PX(Far East, Hawaii) T: England M: Other Areas
UE : AAFES(Europe) X: Australia

⚠ indicates safety critical components.

PARTS LIST

* New Parts
Parts without Parts No. are not supplied.
Les articles non mentionnes dans le Parts No. ne sont pas fournis.
Teile ohne Parts No. werden nicht geliefert.

Ref. No. 参照番号	Address 位置	New Parts 新	Parts No. 部品番号	Description 部品名／規格	Destination 仕向	Remarks 備考
R15			RK73FB2A151J	CHIP R 150 J 1/10W		
R16			RK73FB2A333J	CHIP R 33K J 1/10W	E	
R17			RK73FB2A473J	CHIP R 47K J 1/10W		
VR1			R12-1439-05	TRIMMING POT. (4.7K)		
IC1			NJM4560M	IC(OP AMP X2)		
TH1			159-101-83052	THERMISTER 100		
AF AMP UNIT (X58-3380-00)						
C1			CC73FSL1H221J	CHIP C 220PF J		
C2			CK73FB1E393K	CHIP C 0.039UF K		
C3			CK73FB1E223K	CHIP C 0.022UF K		
C5			CK73FB1E223K	CHIP C 0.022UF K		
C6			CK73FB1E473M	CHIP C 0.047UF M		
C7			C92-0005-05	CHIP TAN 2.2UF 6.3WV		
C8			CC73FSL1H101J	CHIP C 100PF J		
C9			C92-0501-05	CHIP TAN 1.5UF 6.3WV		
C10			CC73FSL1H101J	CHIP C 100PF J		
C11			CK73FB1E473M	CHIP C 0.047UF M		
C12			CC73FSL1H101J	CHIP C 100PF J		
C13			C90-2053-05	CHIP TAN 47UF 6.3WV		
C14			CK73FB1H102K	CHIP C 1000PF K		
C15			C92-0004-05	CHIP TAN 1UF 16WV		
			E23-0610-05	TERMINAL		
R1			RK73FB2A102J	CHIP R 1.0K J 1/10W		
R2			RK73FB2A334J	CHIP R 330K J 1/10W		
R3			RK73FB2A392J	CHIP R 3.9K J 1/10W		
R4			RK73FB2A154J	CHIP R 150K J 1/10W		
R5			RK73FB2A152J	CHIP R 1.5K J 1/10W		
R6			RK73FB2A472J	CHIP R 4.7K J 1/10W		
R7			RK73FB2A153J	CHIP R 15K J 1/10W		
R8			RK73FB2A471J	CHIP R 470 J 1/10W		
R9			RK73FB2A273J	CHIP R 27K J 1/10W		
R10			RK73FB2A100J	CHIP R 10 J 1/10W		
R11			RK73FB2A103J	CHIP R 10K J 1/10W		
D1			02CZ6.8X	CHIP ZENER DIODE		
IC1			NJM386BM	IC(OP AMP)		
Q1			2SB1182F5(Q)	CHIP TRANSISTOR		
Q2		*	2SC4081(BR)	CHIP TRANSISTOR		
Q3			DTC144EU	DIGITAL TRANSISTOR		
Q4		*	2SC4081(BR)	CHIP TRANSISTOR		
APC UNIT (X59-3420-00)						
C1 -13			CC73FSL1H101J	CHIP C 100PF J		
C14			CK73FB1E223K	CHIP C 0.022UF K		
C15			CC73FSL1H101J	CHIP C 100PF J		
C16			C92-0005-05	CHIP TAN 2.2UF 6.3WV		
C17 -21			CC73FSL1H101J	CHIP C 100PF J		
			E23-0610-05	TERMINAL		
R1			RK73FB2A152J	CHIP R 1.5K J 1/10W		
R2			RK73FB2A182J	CHIP R 1.8K J 1/10W		
R3			RK73FB2A561J	CHIP R 560 J 1/10W		
R4			RK73FB2A153J	CHIP R 15K J 1/10W		
R5			RK73FB2A332J	CHIP R 3.3K J 1/10W		

E: Scandinavia & Europe K: USA P: Canada W: Europe
U: PX(Far East, Hawaii) T: England M: Other Areas
UE: AAFES(Europe) X: Australia

⚠ indicates safety critical components.

PARTS LIST

* New Parts
Parts without **Parts No.** are not supplied.
Les articles non mentionnes dans le **Parts No.** ne sont pas fournis.
Telle ohne **Parts No.** werden nicht geliefert.

Ref. No. 参照番号	Address 位置	New Parts 新	Parts No. 部品番号	Description 部品名／規格	Destination 仕向	Remarks 備考
R6			RK73FB2A102J	CHIP R 1.0K J 1/10W		
R7			RK73FB2A272J	CHIP R 2.7K J 1/10W		
R8			RK73FB2A822J	CHIP R 8.2K J 1/10W		
R9			RK73FB2A123J	CHIP R 12K J 1/10W		
VR1		*	R12-3463-05	TRIMMING POT.(22K)HI		
VR2		*	R12-1441-05	TRIMMING POT.(1K)LOW		
D1		*	DA204U	CHIP DIODE		
D2			MA110	CHIP DIODE		
Q1			2SB1182F5(Q)	CHIP TRANSISTOR		
Q2			IMX1	DIGITAL TRANSISTOR		
Q3			FMW1	DIGITAL TRANSISTOR		
Q4			2SB1182F5(Q)	CHIP TRANSISTOR		
BPF UNIT (X59-3430-00)						
C1			CC73FCH1H030C	CHIP C 3.0PF C		
C2			CC73FCH1HR75C	CHIP C 0.75PF C		
C3			CC73FCH1H040C	CHIP C 4.0PF C		
C4			CC73FCH1H020C	CHIP C 2.0PF C		
C5 ,6			CC73FCH1H030C	CHIP C 3.0PF C		
C7			CC73FCH1H220J	CHIP C 22PF J		
C8 ,9			CC73FCH1H030C	CHIP C 3.0PF C		
C10			CC73FCH1H080D	CHIP C 8.0PF D		
C11 ,12			CC73FCH1H040C	CHIP C 4.0PF C		
			E23-0610-05	TERMINAL		
VCO UNIT (X59-3470-00)						
C1			CK73FB1E103K	CHIP C 0.010UF K		
C2			CC73GSL1H101J	CHIP C 100PF J		
C3			CC73GCH1H040C	CHIP C 4.0PF C		
C4			CC73GCH1H020C	CHIP C 2.0PF C		
C5			C92-0509-05	TANTAL 10UF 6.3WV		
C6			CC73GSL1H101J	CHIP C 100PF J		
C7			CC73FCH1HOR5C	CHIP C 0.5PF C		
C8			CC73FCH1H040C	CHIP C 4.0PF C		
C9			CC73GCH1H040C	CHIP C 4.0PF C		
C10			CC73GCH1HOR5C	CHIP C 0.5PF C		
C11 ,12			CC73GCH1H030C	CHIP C 3.0PF C		
C13			CC73GCH1H020C	CHIP C 2.0PF C		
C14			CK73GB1H102K	CHIP C 1000PF K		
C15			CC73GSL1H101J	CHIP C 100PF J		
C16			CK73GB1H471K	CHIP C 470PF K		
C17			CK73EB1E104K	CHIP C 0.10UF K		
C18			CC73GSL1H101J	CHIP C 100PF K		
C19			CK73FB1E103K	CHIP C 0.010UF K		
C20			CC73GSL1H101J	CHIP C 100PF K		
C21			CK73GB1H102K	CHIP C 1000PF K		
TC1			C05-0357-05	CERAMIC TRIMMER (3PF)		
TC2			C05-0345-05	CERAMIC TRIMMER (10PF)		
L1			L40-1072-80	SMALL FXED INDUCTOR(10NH)		
L2			L40-1092-81	SMALL FXED INDUCTOR(1UF)		
L3			L40-1081-80	SMALL FXED INDUCTOR(100NH)		
L4			L40-4792-81	SMALL FXED INDUCTOR(4.7UF)		
R1			RK73GB1J123J	CHIP R 12K J 1/16W		
R2			RK73GB1J100J	CHIP R 10 J 1/16W		

E: Scandinavia & Europe K: USA P: Canada W: Europe
U: PX(Far East, Hawaii) T: England M: Other Areas
UE: AAFES(Europe) X: Australia

⚠ indicates safety critical components.

PARTS LIST

* New Parts
Parts without **Parts No.** are not supplied.
Les articles non mentionnes dans le **Parts No.** ne sont pas fournis.
Teile ohne **Parts No.** werden nicht geliefert.

Ref. No. 参照番号	Address 位置	New Parts 新	Parts No. 部品番号	Description 部品名／規格	Destination 仕向	Remarks 備考
R3			RK73GB1J101J	CHIP R 100 J 1/16W		
R4			RK73GB1J470J	CHIP R 47 J 1/16W		
R5			RK73GB1J100J	CHIP R 10 J 1/16W		
R6			RK73GB1J682J	CHIP R 6.8K J 1/16W		
R7			RK73GB1J101J	CHIP R 100 J 1/16W		
R9			RK73GB1J391J	CHIP R 390 J 1/16W		
R10			RK73GB1J562J	CHIP R 5.6K J 1/16W		
D1			MA77	CHIP DIODE		
D2 ,3			MA360	CHIP DIODE		
Q1			2SK508(K51)	CHIP FET		
Q2			2SC4093(R26,27)	CHIP TRANSISTOR		
Q3 ,4		*	DTC114YU	DIGITAL TRANSISTOR		
R8			RK73GB1J104J	CHIP R 100K J 1/16W		

E: Scandinavia & Europe K: USA P: Canada W:Europe
U: PX(Far East, Hawaii) T: England M: Other Areas
UE : AAFES(Europe) X: Australia

⚠ indicates safety critical components.

DISASSEMBLY

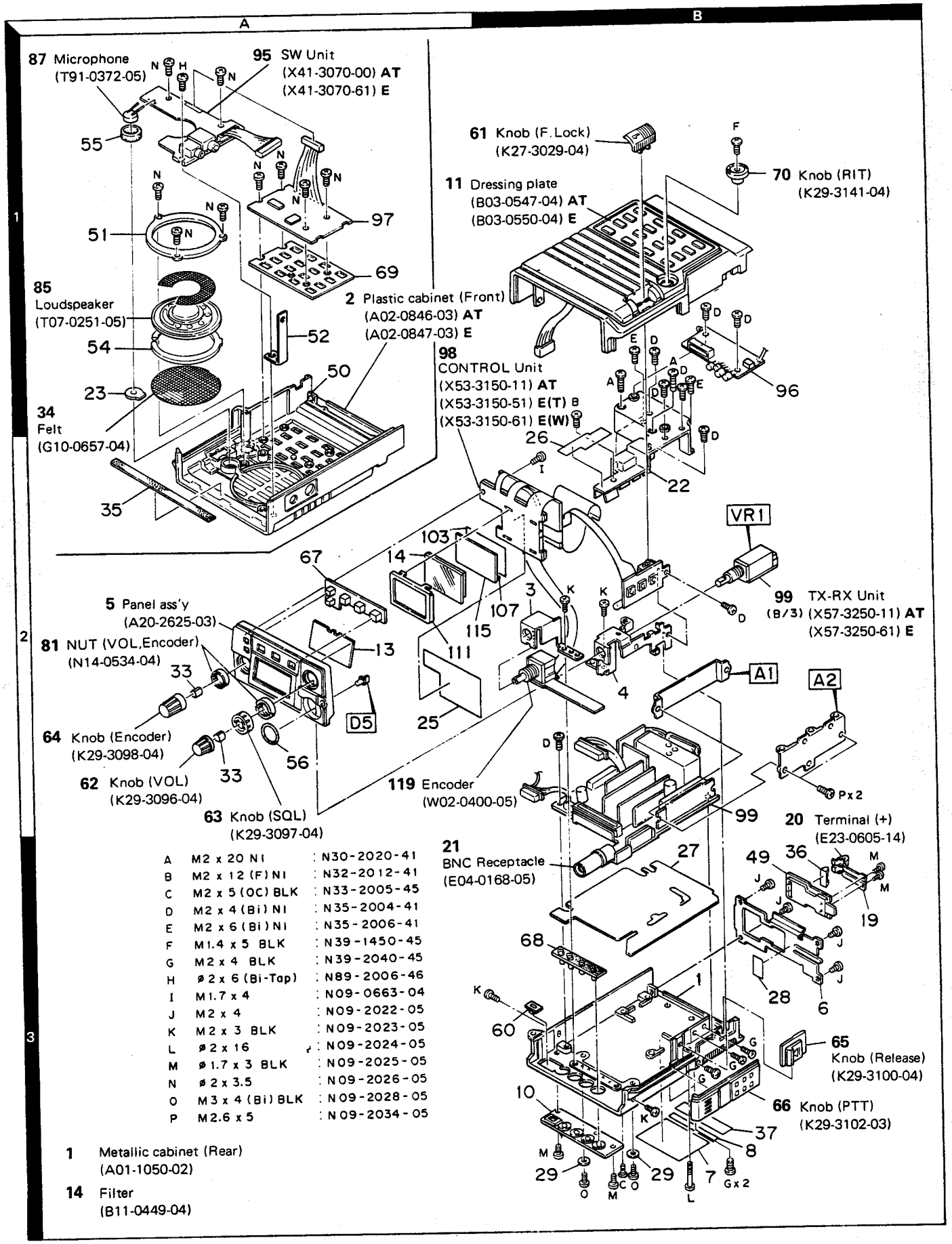

A	M2 x 20 NI	: N30-2020-41
B	M2 x 12 (F) NI	: N32-2012-41
C	M2 x 5 (OC) BLK	: N33-2005-45
D	M2 x 4 (Bi) NI	: N35-2004-41
E	M2 x 6 (Bi) NI	: N35-2006-41
F	M1.4 x 5 BLK	: N39-1450-45
G	M2 x 4 BLK	: N39-2040-45
H	ø2 x 6 (Bi-Tap)	: N89-2006-46
I	M1.7 x 4	: N09-0663-04
J	M2 x 4	: N09-2022-05
K	M2 x 3 BLK	: N09-2023-05
L	ø2 x 16	: N09-2024-05
M	ø1.7 x 3 BLK	: N09-2025-05
N	ø2 x 3.5	: N09-2026-05
O	M3 x 4 (Bi) BLK	: N09-2028-05
P	M2.6 x 5	: N09-2034-05

PACKING

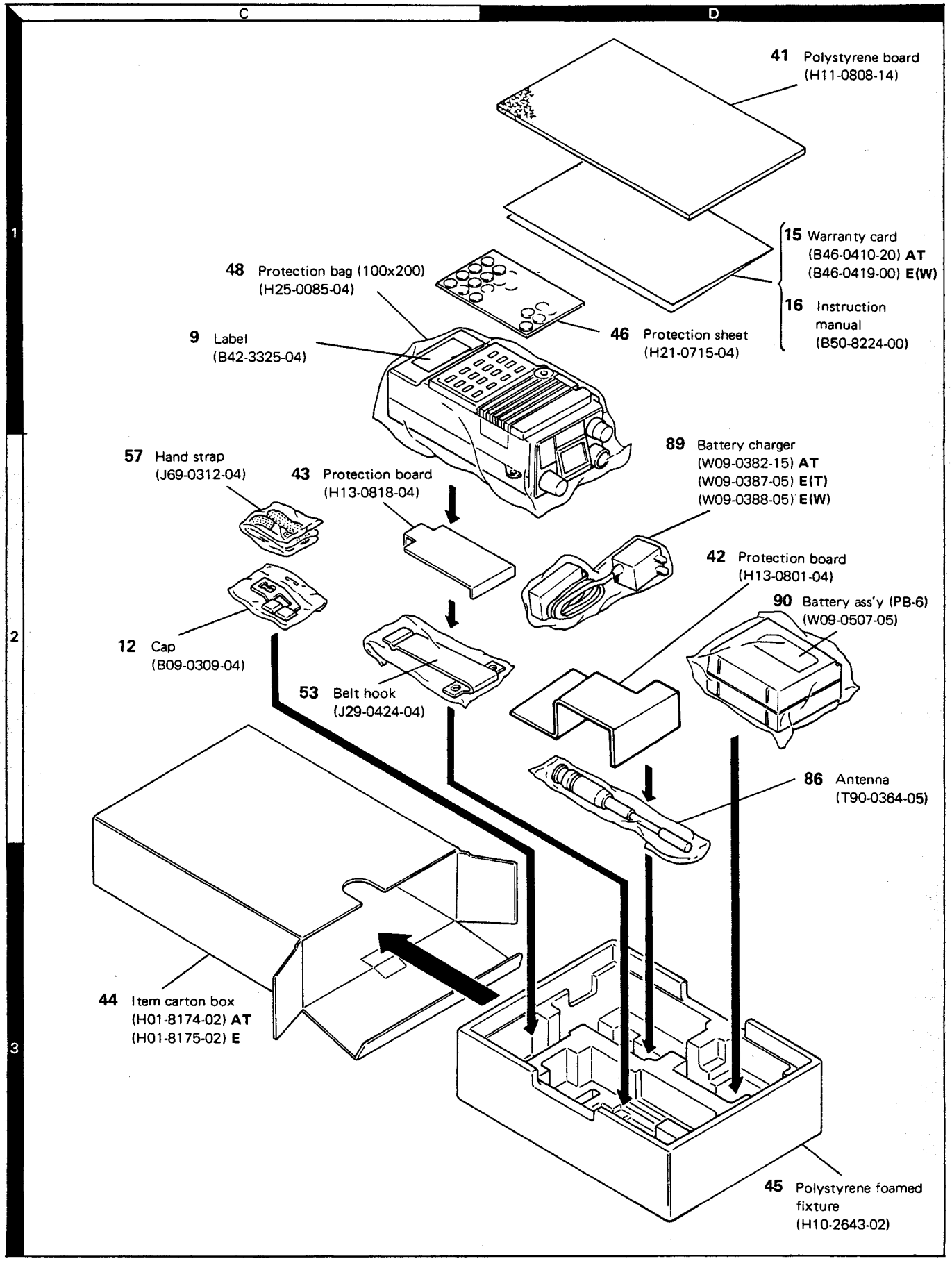
C
D
1
2
3
41 Polystyrene board
(H11-0808-14)
15 Warranty card
(B46-0410-20) AT
(B46-0419-00) E(W)
16 Instruction manual
(B50-8224-00)
48 Protection bag (100x200)
(H25-0085-04)
46 Protection sheet
(H21-0715-04)
9 Label
(B42-3325-04)
57 Hand strap
(J69-0312-04)
43 Protection board
(H13-0818-04)
89 Battery charger
(W09-0382-15) AT
(W09-0387-05) E(T)
(W09-0388-05) E(W)
42 Protection board
(H13-0801-04)
90 Battery ass'y (PB-6)
(W09-0507-05)
12 Cap
(B09-0309-04)
53 Belt hook
(J29-0424-04)
86 Antenna
(T90-0364-05)
44 Item carton box
(H01-8174-02) AT
(H01-8175-02) E
45 Polystyrene foamed fixture
(H10-2643-02)

ADJUSTMENT

REQUIRED TEST EQUIPMENT

1. **Stabilized Power Supply**
   1) The supply voltage can be changed between 5V and 18V, and the current is 3A or more.
   2) The standard voltage is 9.0V.
2. **DC Ammeter**
   1) Class 1 ammeter (17 ranges and other features).
   2) The full scale can be set to either 300mA or 1A.
   3) A cable of less internal loss must be used.
3. **Frequency Counter (f. counter)**
   1) Frequencies of up to 1300MHz or so can be measured.
   2) The sensitivity can be changed to 250MHz or below, and measurements are highly stable and accurate (0.2ppm or so).
4. **Power Meter**
   1) Measurable frequency : 1300MHz or more.
   2) Impedance : 50Ω, unbalanced.
   3) Measuring range : Full scal of 10W or so.
   4) A standard cable (5D2W 1m) must be used.
5. **Linear Detector**
   1) Measurable frequency : Up to 1300MHz.
   2) Characteristics are flat, and CN is 60dB or more.
6. **Digital Voltmeter**
   1) Voltage range : FS = 18V or so.
   2) Input resistance : 1MΩ or more.
7. **Oscilloscope**
   1) Measuring range : DC to 30MHz.
   2) Provides highly accurate measurments for 5 to 25MHz.
8. **AF Voltmeter (AF VTVM)**
   1) Measurable frequency : 50Hz to 1MHz.
   2) Maximum sensitivity : 1mV or more.
9. **Spectrum Analyzer**
   1) Measuring range : DC to 1300MHz or more.
10. **Standard Signal Generator (SSG)**
    1) Maximum frequency : 1300MHz or more.
    2) Output : −20dB/0.1μV to 120dB/1V.
    3) Output impedance : 50Ω.
11. **Tracking Generator**
    1) Center frequency : 50kHz to 1500MHz.
    2) Frequency deviation : ±35MHz.
    3) Output voltage : 100mV or more.
12. **Dummy Load**
    1) 8Ω, 3W or more.

PREPARATION

- Set the unit in the receiving mode and set the controls as follows, unless otherwise specified.

POWER/VOL	ON
SQL VR	MIN
F.LOCK	OFF
HI/LOW	HI

- Use a non-conductive rod such as a Bakelite rod for adjustment (especially of trimmers and coils).
- To protect the SSG, do not send out signals while adjusting the receiving unit.
- The indicated SSG output levels are for maximum output.

ADJUSTMENT

TX-RX COMMON ADJUSTMENT

Item	Condition	Measurement			Adjustment			Specifications/Remarks
		Test-equipment	Unit	Terminal	Unit	Parts	Method	
1. Reset	1) Hold dowm [M] key POWER SW : ON							Dispaly 1260.000
2. DC voltage check	1) DC power : 9V	DC V.M					Check	9V
	2) 5C							5V
	3) 5R							
	4) 5M							
	5) 5T PTT : ON							

PLL ADJUSTMENT

Item	Condition	Measurement			Adjustment			Specifications/Remarks
		Test-equipment	Unit	Terminal	Unit	Parts	Method	
1. VCV	1) FREQ. : 1299.975MHz	DC V.M Power meter	MIC AMP	TP1	VCO	TC1	3.7V	±0.2V
	2) PTT : ON					TC2	3.7V	±0.2V
	3) FREQ. : 1258.000MHz						Check	1.5V ± 0.3V
2. Reference frequency	1) FREQ. : 1280.100MHz HI/LOW SW : LOW RIT : Center PTT : ON	f. counter Power meter		ANT	SW	VR1	1280.100MHz	±100Hz
	2) FREQ. : 1280.100MHz RIT : Center SSG output : −98dBm/2.82μV	SSG AF V.M Oscillo-scope Distortion meter		EXT.SP	PLL	TC1	SINAD MAX.	

RX ADJUSTMENT

Item	Condition	Measurement			Adjustment			Specifications/Remarks
		Test-equipment	Unit	Terminal	Unit	Parts	Method	
1. Helical	1) Tracking generator output : −40dBm	T.G.		ANT	TX-RX	L12, L13	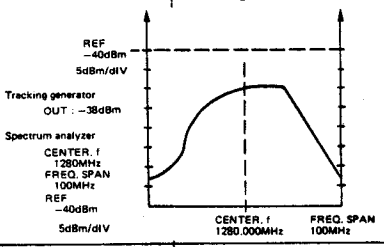	MAX. gain and bandwidth
	2) Spectrum analyzer reference level : −40dBm RF ATT : 10dB	Spectrum analyzer	TX-RX	TP2				
2. IF	1) FREQ. : 1285.000MHz Adjust the output level of SSG to flicker the 3rd segment of S-meter.	SSG S-meter		S-meter	TX-RX	L14	Turn the L14 to the point at which 3rd segment of S-meter appear.	
3. Sensitivity	1) FREQ. : 1280.100MHz SSG output : −107dBm/1μV	Oscillo-scope AF V.M Distortion meter		EXT.SP				SINAD 12dB or more.
	2) FREQ. : 1258.100MHz SSG output : −104dBm/1.41μV							
	3) FREQ. : 1299.900MHz SSG output : −107dBm/1μV							
4. S-meter	1) FREQ. : 1285.000MHz SSG output : −93dBm/5μV	SSG		S-meter	IF	VR1	Adjust the VR1 to all segments light on.	
	2) SSG output : −103dBm/1.58μV						Check	All segments light off.

ADJUSTMENT

TX ADJUSTMENT

Item	Condition	Measurement			Adjustment			Specifications/Remarks
		Test-equipment	Unit	Terminal	Unit	Parts	Method	
1. Output power	1) DC power 9V FREQ. : 1258.000MHz HI/LOW SW : LOW PTT : ON	Power meter		ANT	APC	VR1	100mW	±20mW Power consumption : 600mA or less.
	2) HI/LOW SW : HI					VR2	1.1W	Power consumption : 1A or less.
	3) Repeat 2 or 3 times to adjusting VR1 and VR2.							
2. DEV	1) FREQ. : 1280.000MHz AG : 1kHz, 80mV **TH-55AT** AG : 1kHz, 40mV **TH-55E**	Power meter AG		ANT	MIC AMP	VR1	±4.2kHz	±200Hz (CTCSS terminal is terminated with 33kΩ.)
	2) AG : 1kHz, 8mV **TH-55AT** AG : 1kHz, 4mV **TH-55E**	Linear detector f. counter					Check	±2.3 ~ 3.7kHz
7. DTMF **TH-55AT** only	1) FREQ. : 1280.000MHz Push [A] and [B] key.			ANT	Signal-ing	VR1	DEV : ±3kHz f : 1633Hz	±200Hz +20Hz, −10Hz

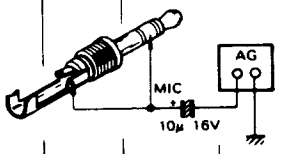

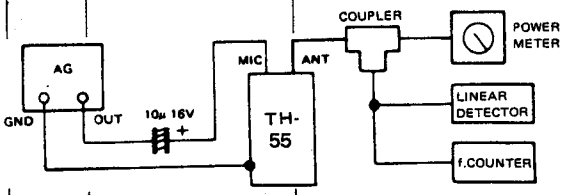

ADJUSTMENT

ADJUSTMENT POINTS

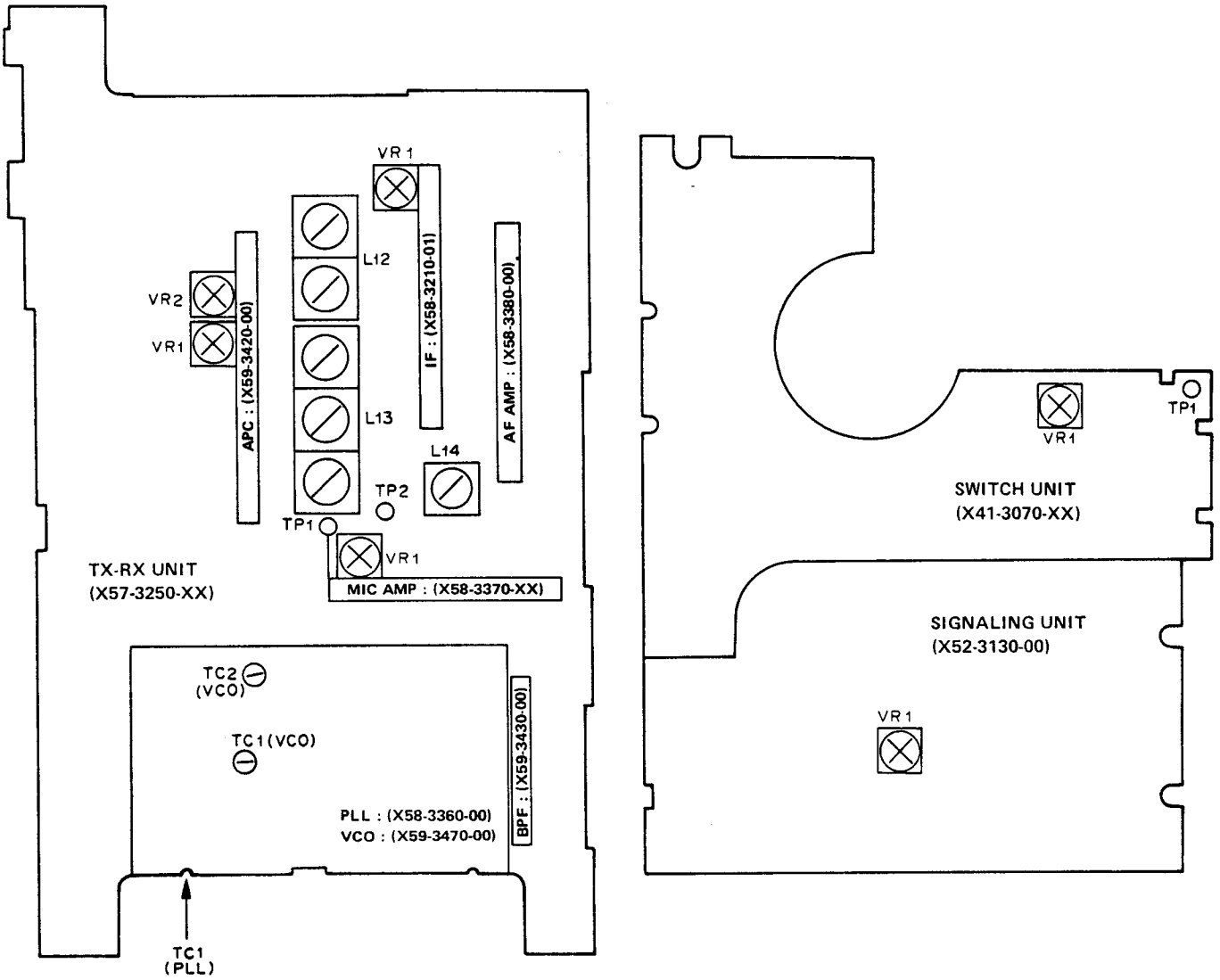

TH-55AT/E PC BOARD VIEWS/CIRCUIT DIAGRAM

AVR UNIT (X43-3020-11)

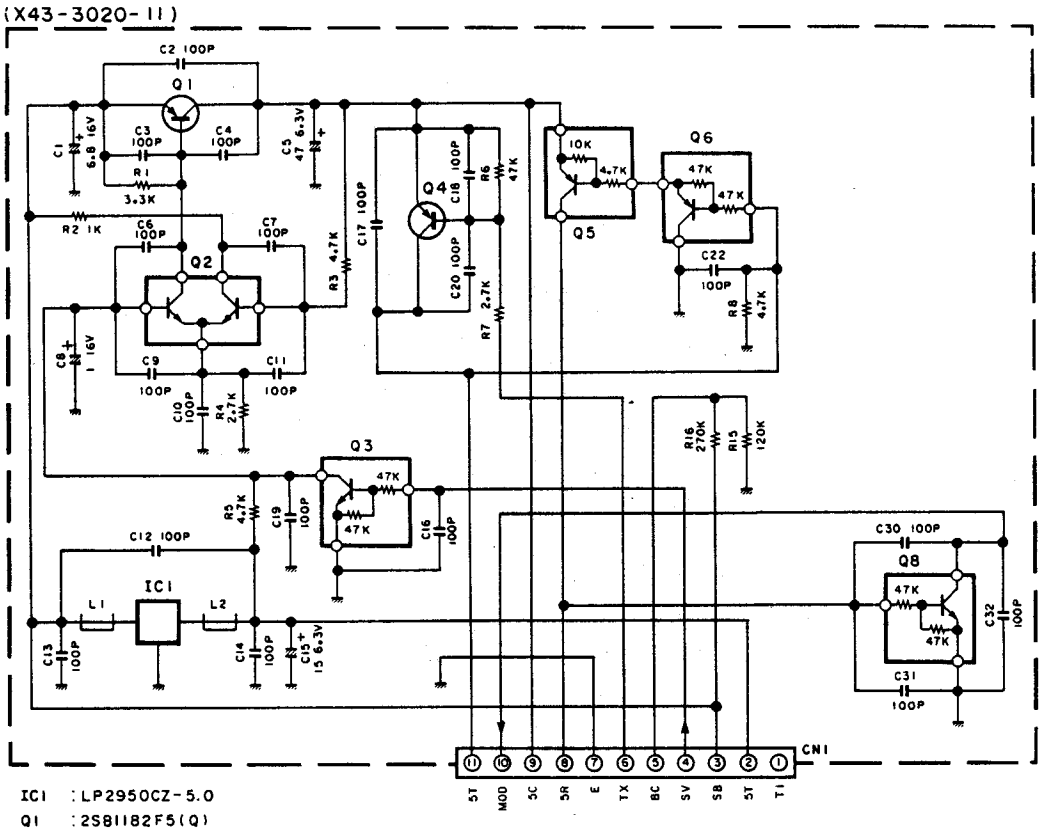

IC1 : LP2950CZ-5.0
Q1 : 2SB1182F5(Q)
Q2 : FMW1
Q3,8 : DTC144EK
Q4 : 2SA1313(Y)
Q5 : DTA143XK
Q6 : DTA144EK

Component side view

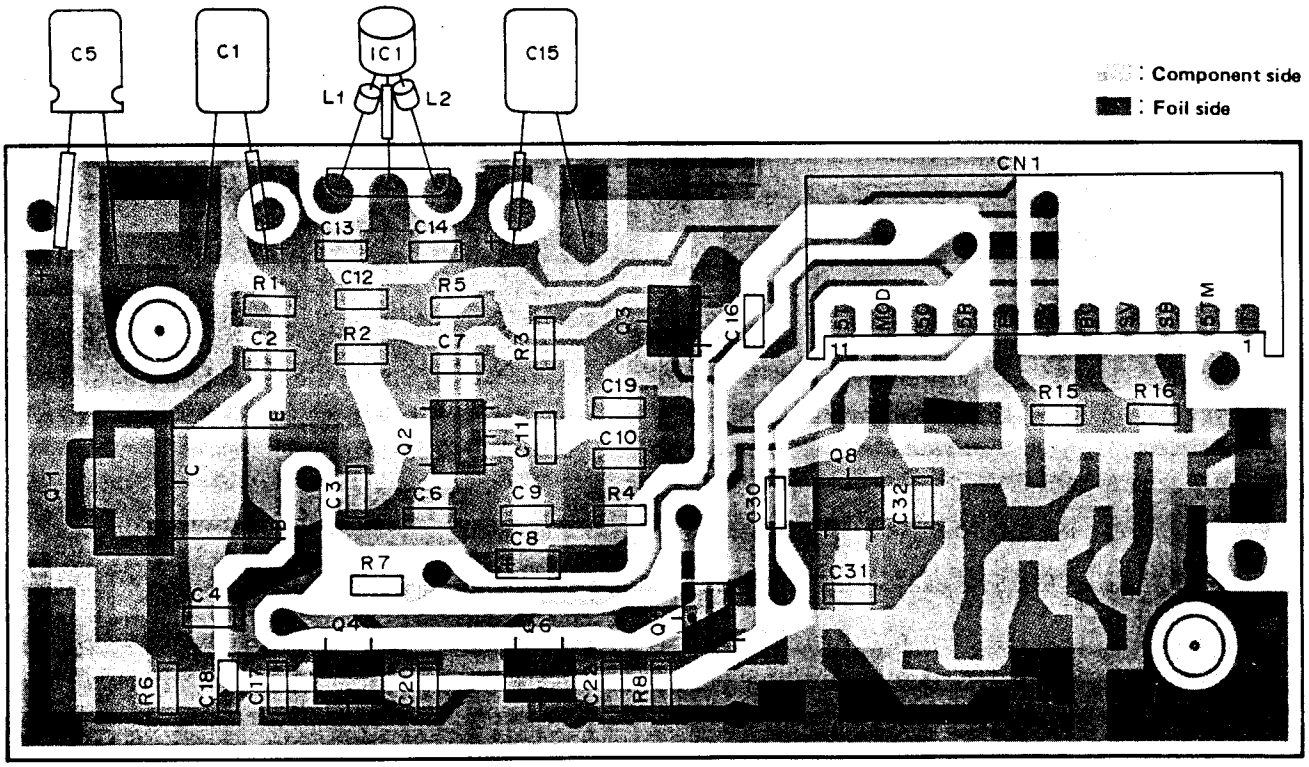

IF UNIT (X58-3210-01)

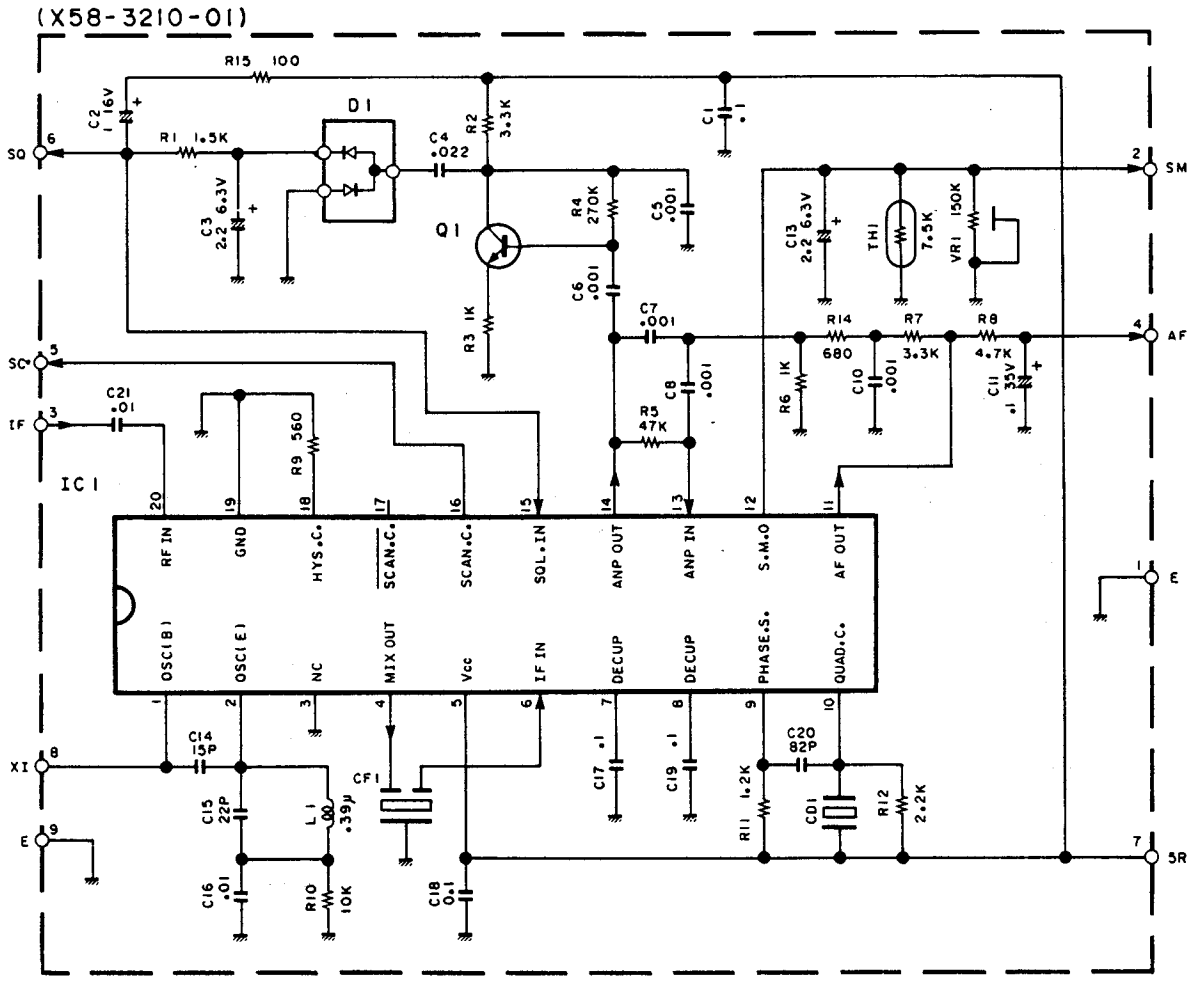

IC1 : TK10486M(B,C)
Q1 : 2SC2712(GR)
D1 : HSM88AS

: Component side
: Foil side

Component side view

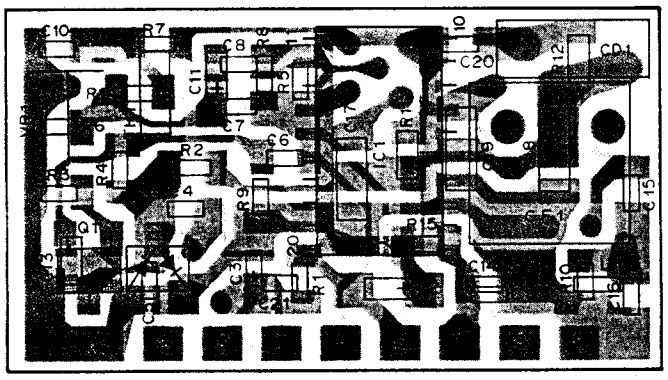

Foil side view

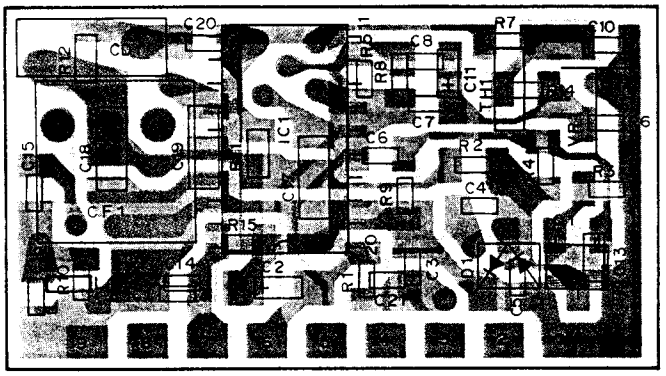

LP2950CZ-5.0

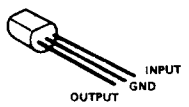

FMW1

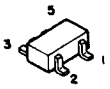

2SA1313(Y)
2SC2712(GR)
DTA143XK
DTA144EK
DTC144EK

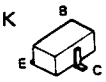

2SB1182F5(Q)

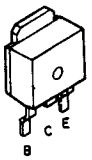

TK10486MT1(B,C)

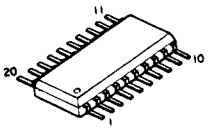

TH-55AT/E PC BOARD VIEWS/CIRCUIT DIAGRAM

MIC AMP UNIT (X58-3370-XX) -11 : TH-55AT -61 : TH-55E

(X58-3370-XX)

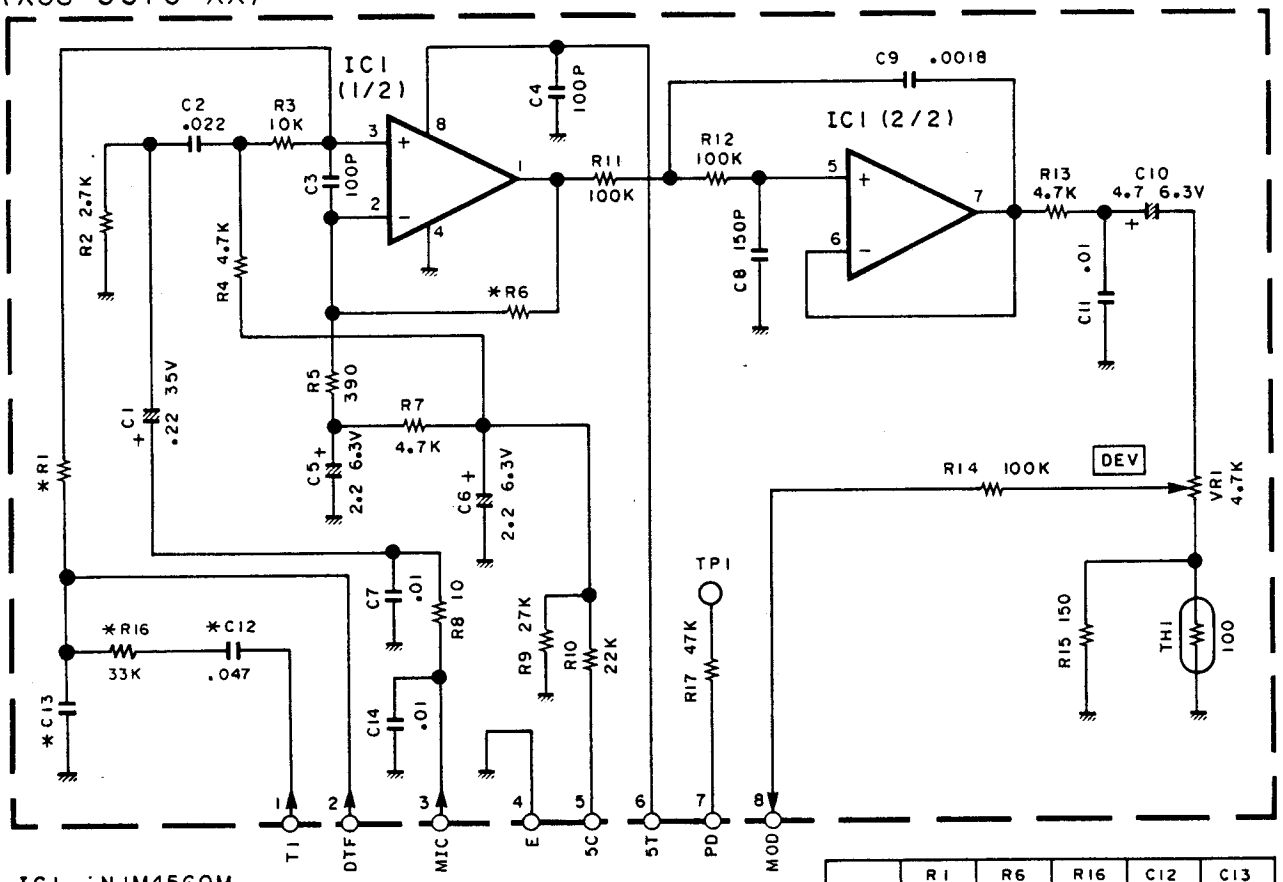

IC1 : NJM4560M

	R1	R6	R16	C12	C13
-11	100K	82K	—	—	.01
-61	330K	150K	33K	.047	.047

: Component side

: Foil side

Component side view

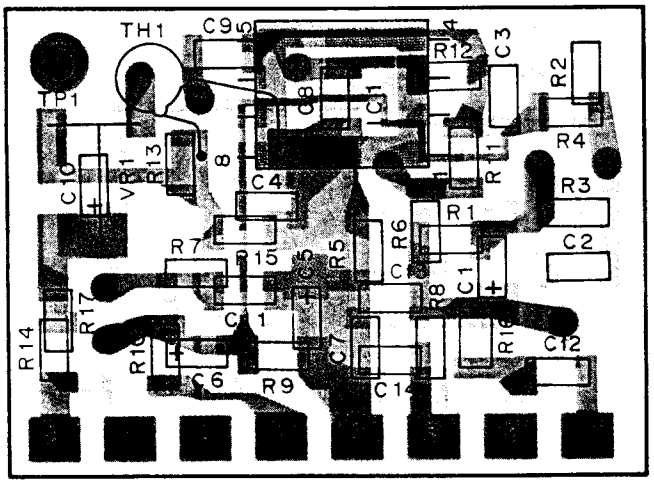

Foil side view

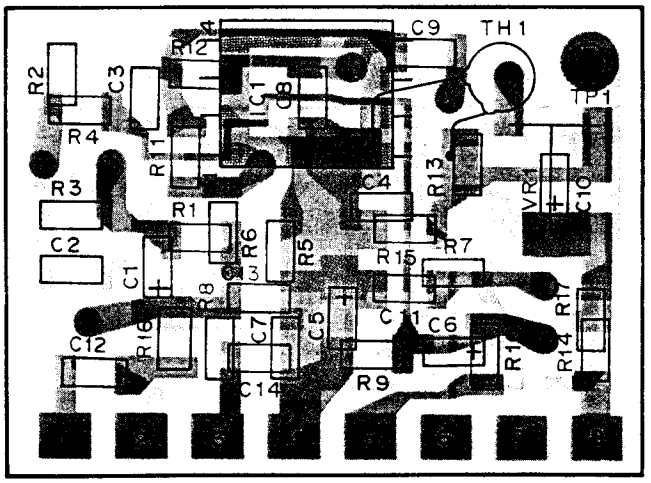

DTC144EU
2SC4081(BR)

2SB1182F5(Q)

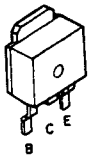

NJM386BM
NJM4560M

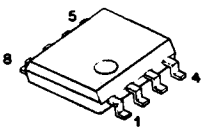

PC BOARD VIEWS/CIRCUIT DIAGRAM TH-55AT/E

AF AMP UNIT (X58-3380-00)

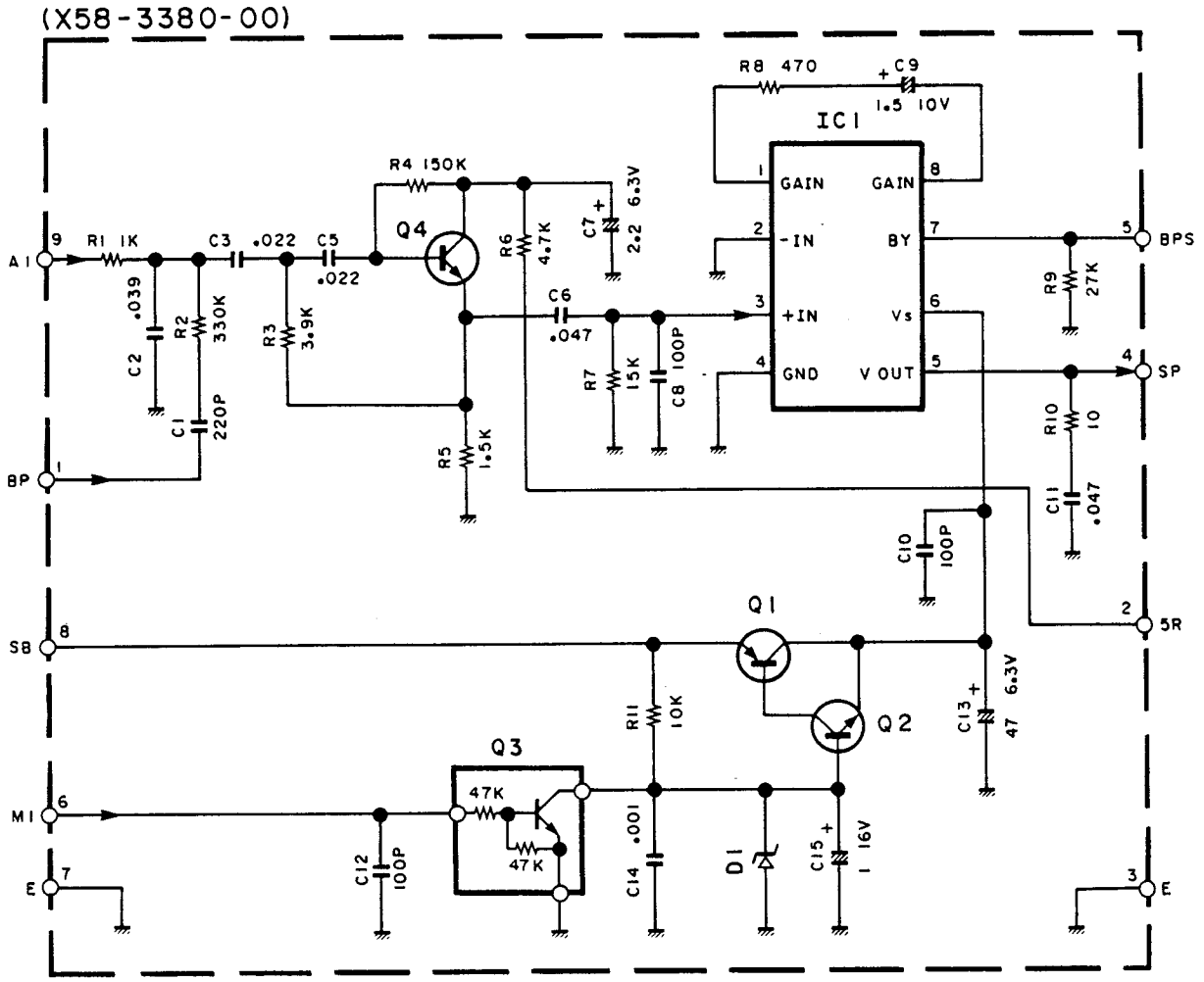

IC1 : NJM386BM
Q1 : 2SB1182F5(Q)
Q2,4 : 2SC4081(BR)
Q3 : DTC144EU
D1 : 02CZ6.8X or RD6.8M-B1

: Component side
: Foil side

Component side view

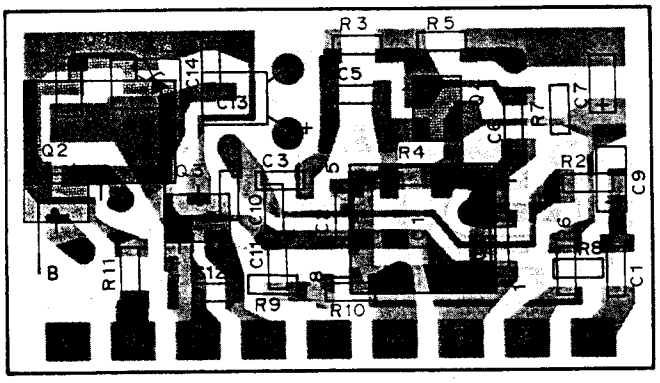

Foil side view

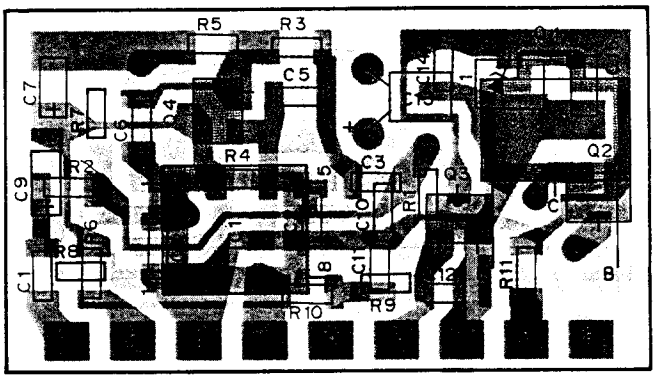

TH-55AT/E PC BOARD VIEWS/CIRCUIT DIAGRAM

APC UNIT (X59-3420-00)

(X59-3420-00)

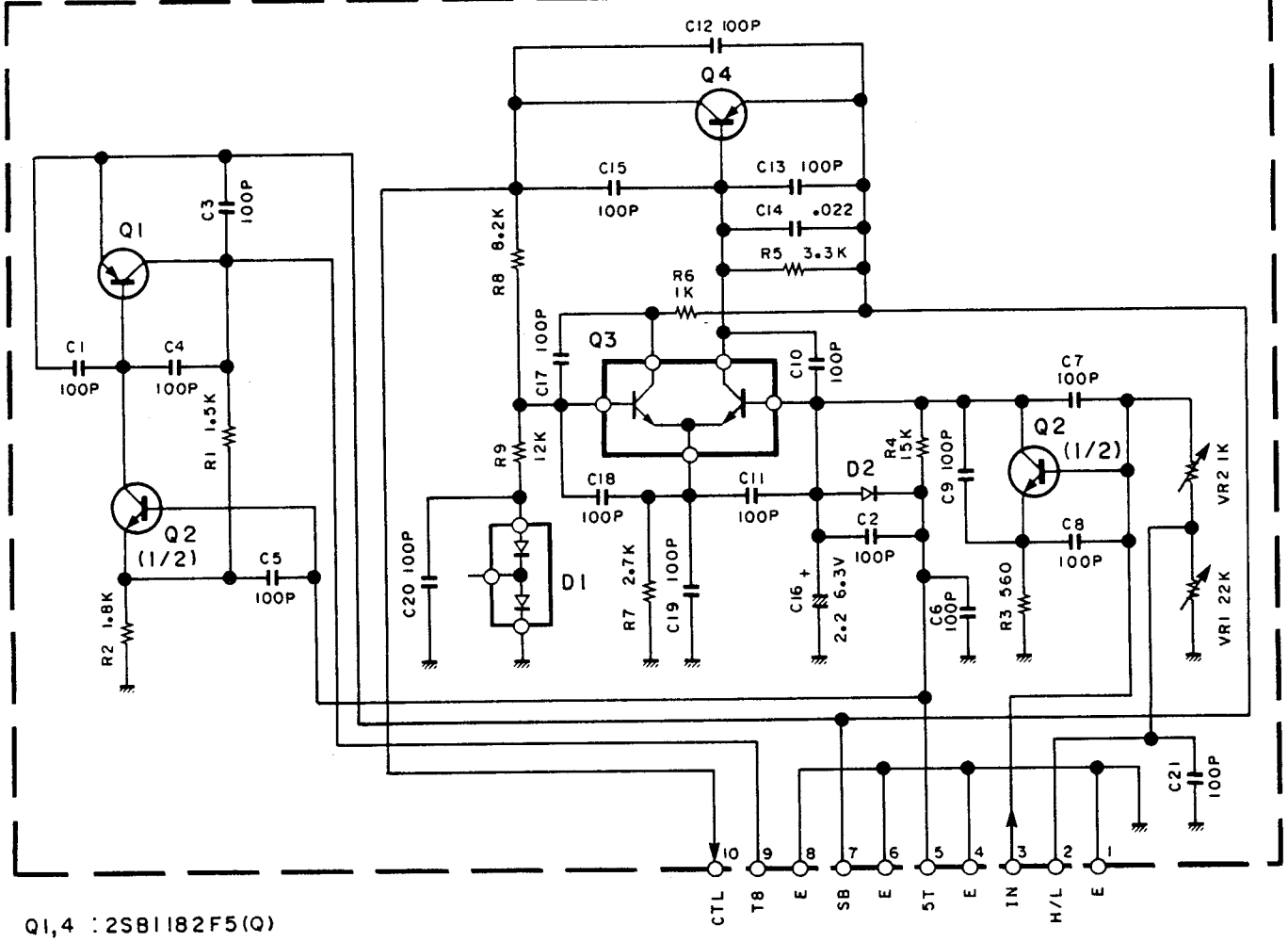

Q1,4 : 2SB1182F5(Q)
Q2 : IMX1
Q3 : FMW1
D1 : DA204U
D2 : MA1110

: Component side
: Foil side

Component side view

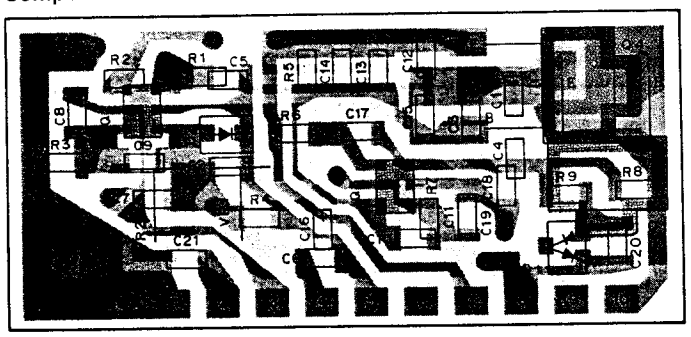

Foil side view

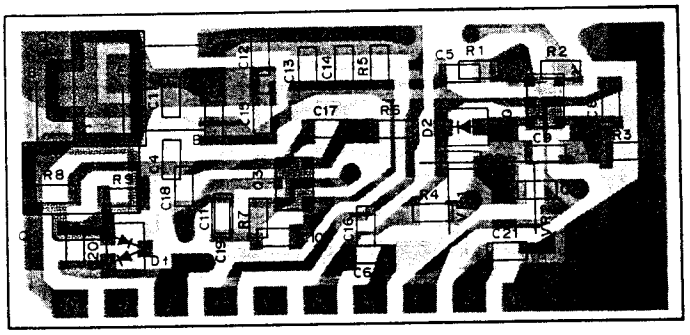

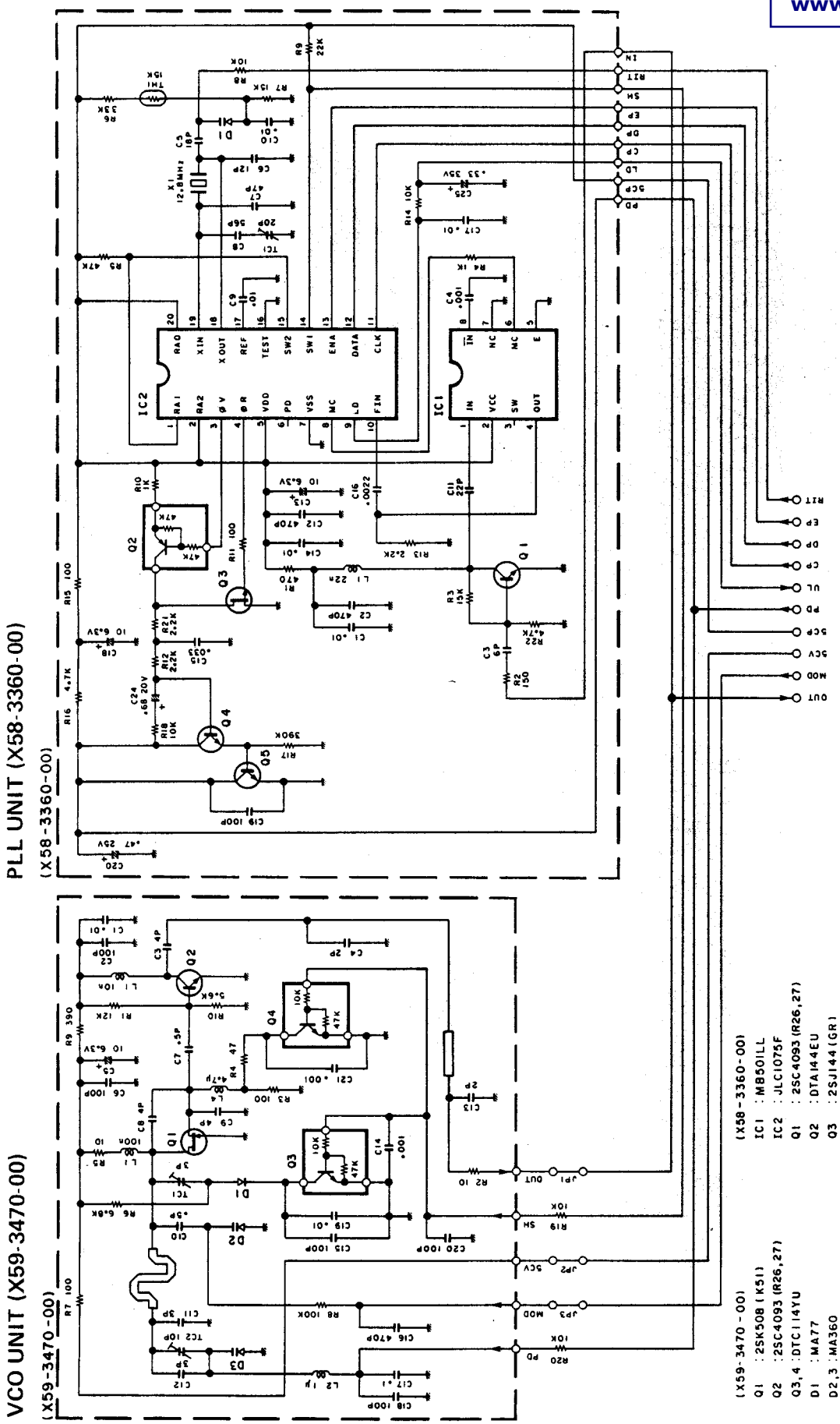

(X58-3360-00)

IC1	: MB501LL
IC2	: JLC1075F
Q1	: 2SC4093 (R26,27)
Q2	: DTA144EU
Q3	: 2SJ144 (GR)
Q4	: 2SC3624 (LI8)
Q5	: 2SC2712 (GR)
D1	: MA360

(X59-3470-00)

Q1	: 2SK508 (K51)
Q2	: 2SC4093 (R26,27)
Q3,4	: DTC114YU
D1	: MA77
D2,3	: MA360

PC BOARD VIEWS/CIRCUIT DIAGRAM TH-55AT/E

PLL UNIT (X58-3360-00)

Component side view

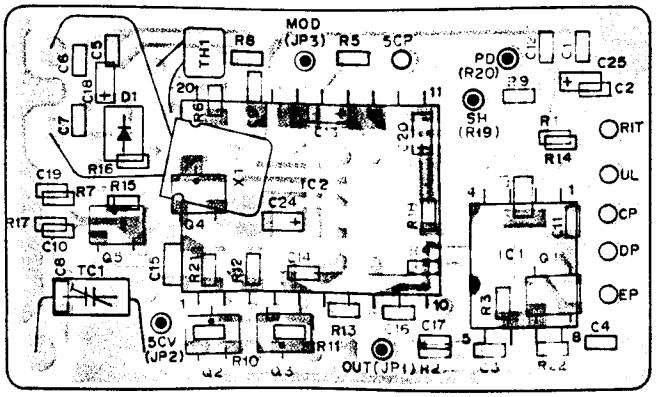

Foil side view

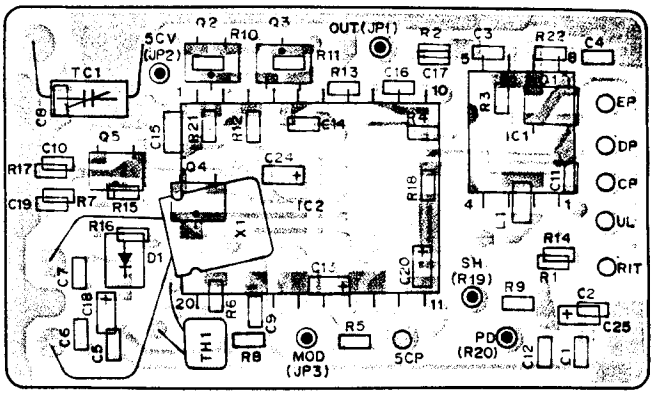

: Component side

: Foil side

VCO UNIT (X59-3470-00)

Component side view

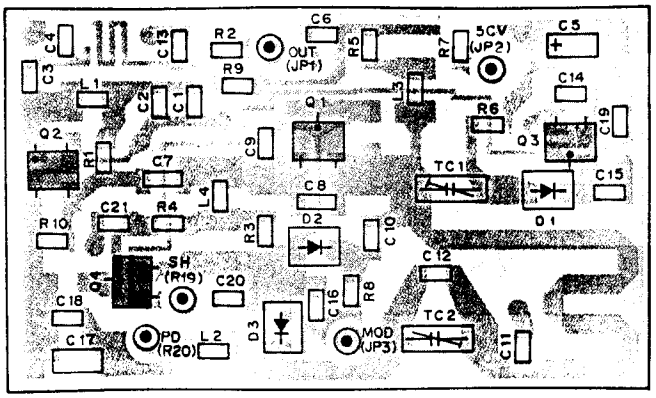

Foil side view

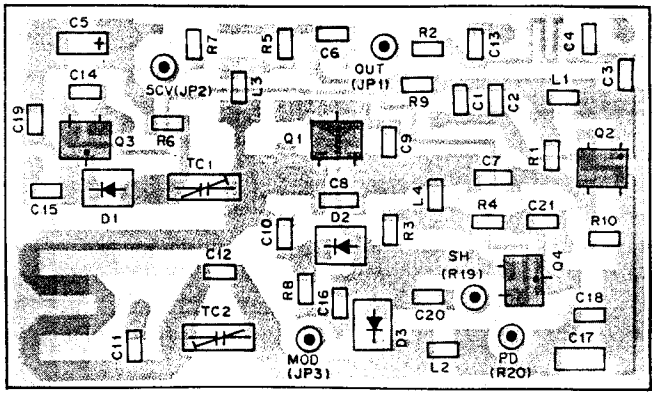

2SC4093(R26, 27)

2SC2712(GR)
2SC3624(L18)
DTA144EU
DTC114YU

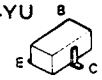

FMW1

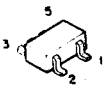

IMX1

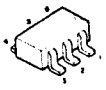

2SJ144(GR)
2SK508(K51)

MB501LL

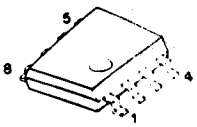

2SB1182F5(Q)

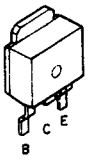

JLC1075F

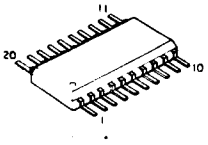

TH-55AT/E PC BOARD VIEWS

SWITCH UNIT (X41-3070-XX) -00 : TH-55AT -61 : TH-55E Component side view

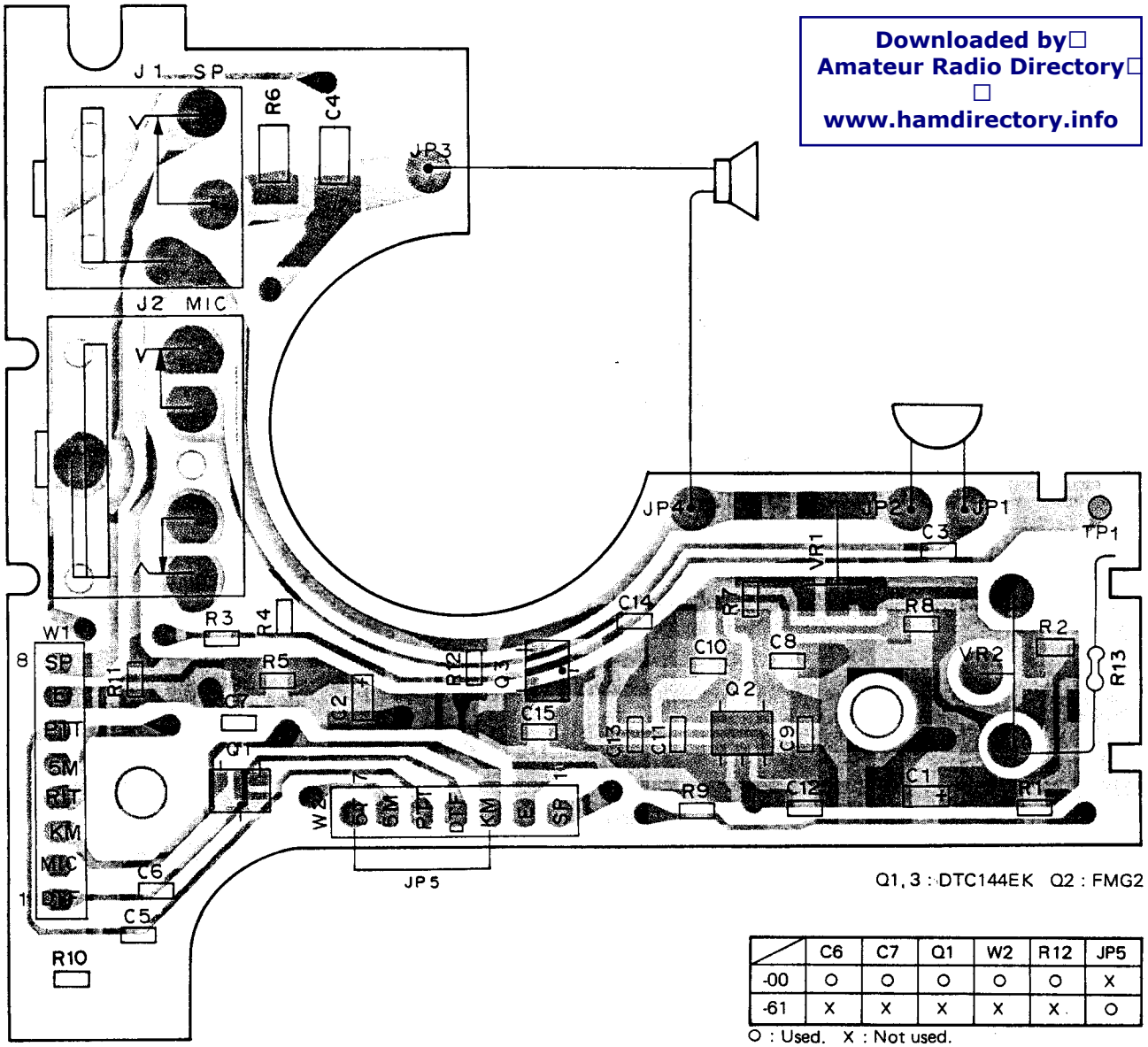

Q1, 3 : DTC144EK Q2 : FMG2

	C6	C7	Q1	W2	R12	JP5
-00	O	O	O	O	O	X
-61	X	X	X	X	X	O

O : Used. X : Not used.

BPF UNIT (X59-3430-00) Component side view

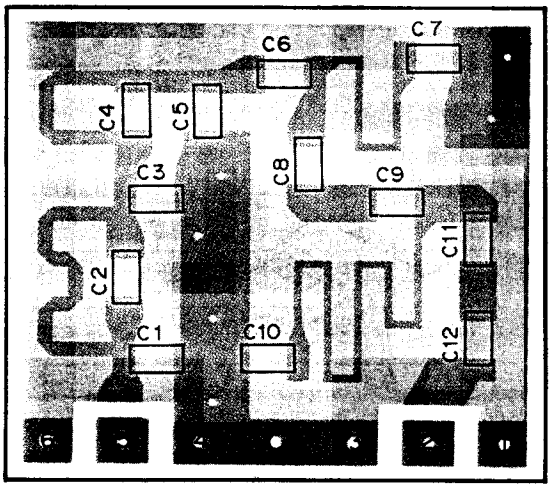

: Component side

: Foil side

SIGNALING UNIT (X52-3130-00) TH-55AT ONLY

Component side view

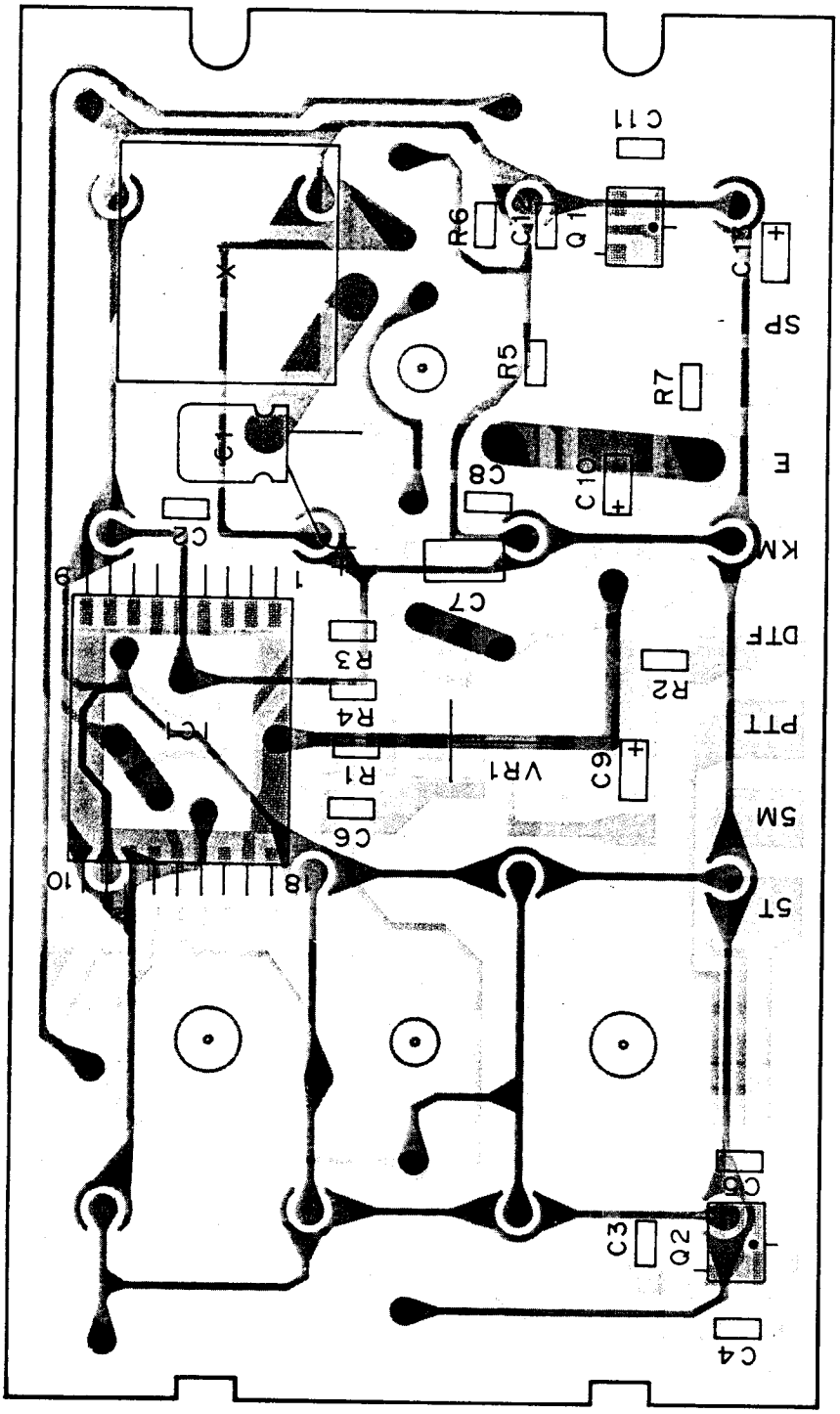

2SA1162(Y)
2SC2712(GR)
2SC2712(Y)
DTA114EK
DTC144EK

FMG2

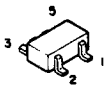

LR40872

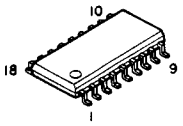

LH5008TP

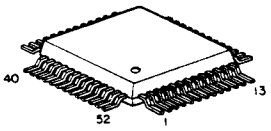

75108AG-028-22

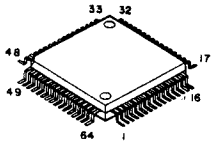

S8054ALR-LN

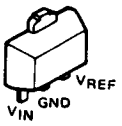

Q1 : 2SC2712(GR) Q2 : DTA114EK
IC1 : LR40872

CONTROL UNIT (X53-3150-XX) -11 : K -51 : T -61 : W Component side view

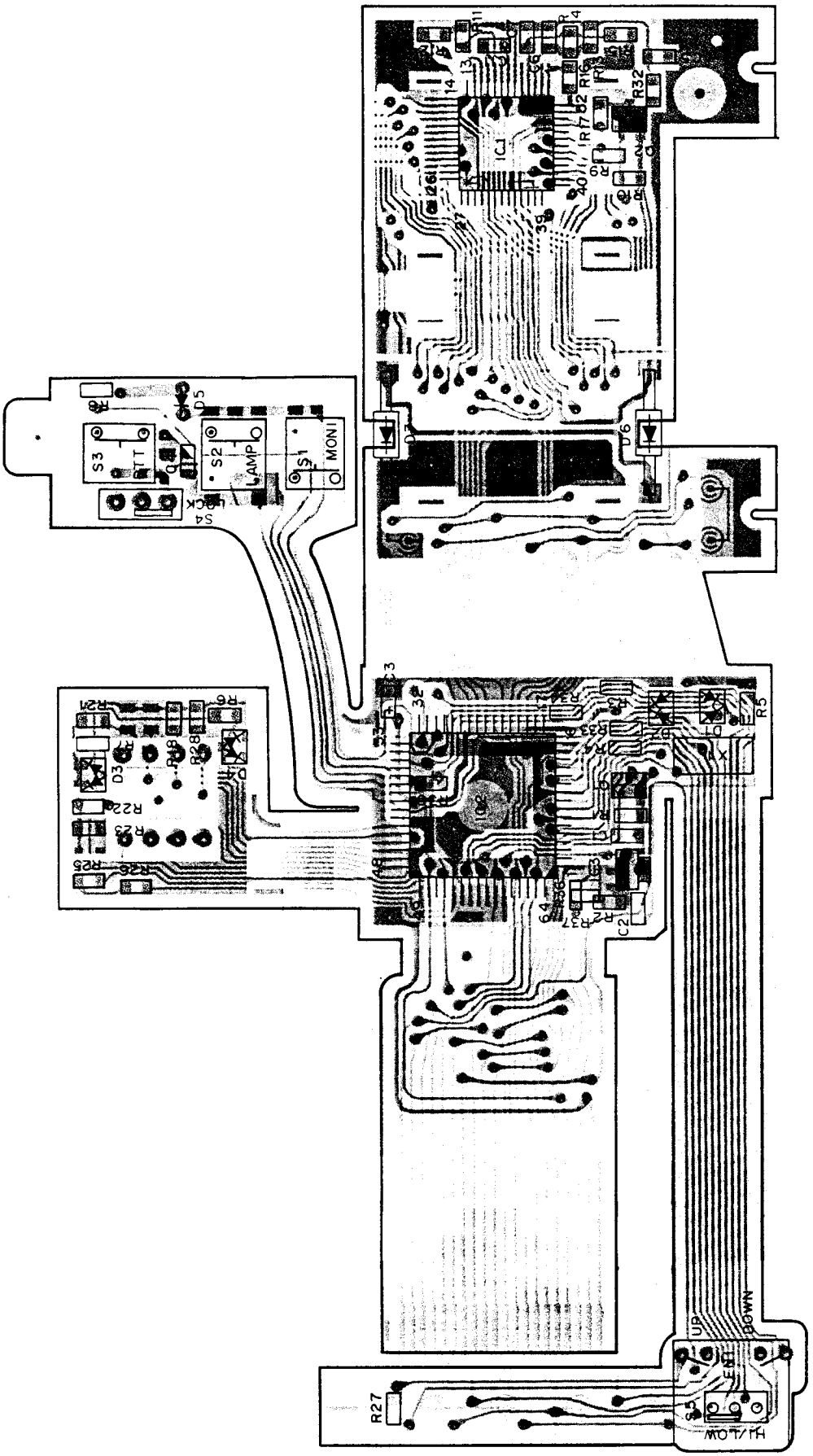

: Component side

: Foil side

	R18	R21	R22	R25	R26	R36	R37
-11	X	O	X	X	X	X	X
-51	O	X	O	X	O	O	O
-61	O	X	O	O	O	O	O

O : Used. X : Not used.

Q1 : 2SC2712(Y) Q2 : 2SA1162(Y)
IC1 . LH5008TP IC2 : 75108AG-028-22 IC3 : S8054ALR-LN
D1, 2 : 1SS184 D3, 4 : 1SS181 D5 : SLH34VC3 D6, 7 : LN01301C(Q)

CONTROL UNIT (X53-3150-XX) Foil side view

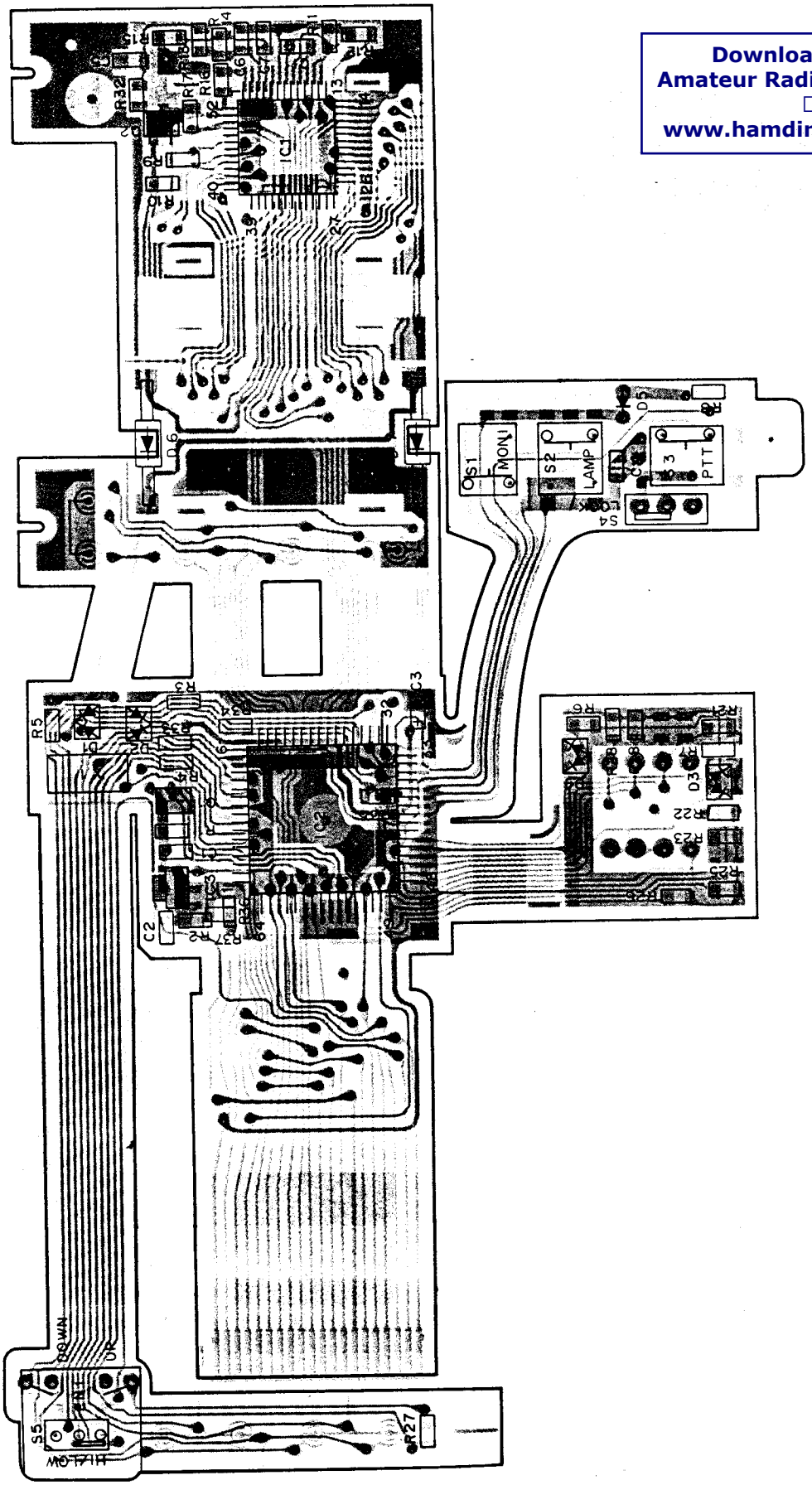

TH-55AT/E PC BOARD VIEWS

TX-RX UNIT (X57-3250-XX) -11 : TH-55AT -61 : TH-55E Component side view

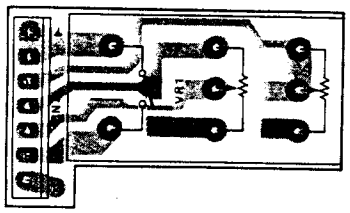

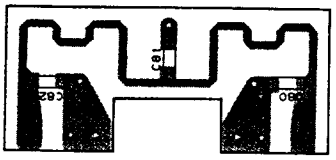

: Component side

: Foil side

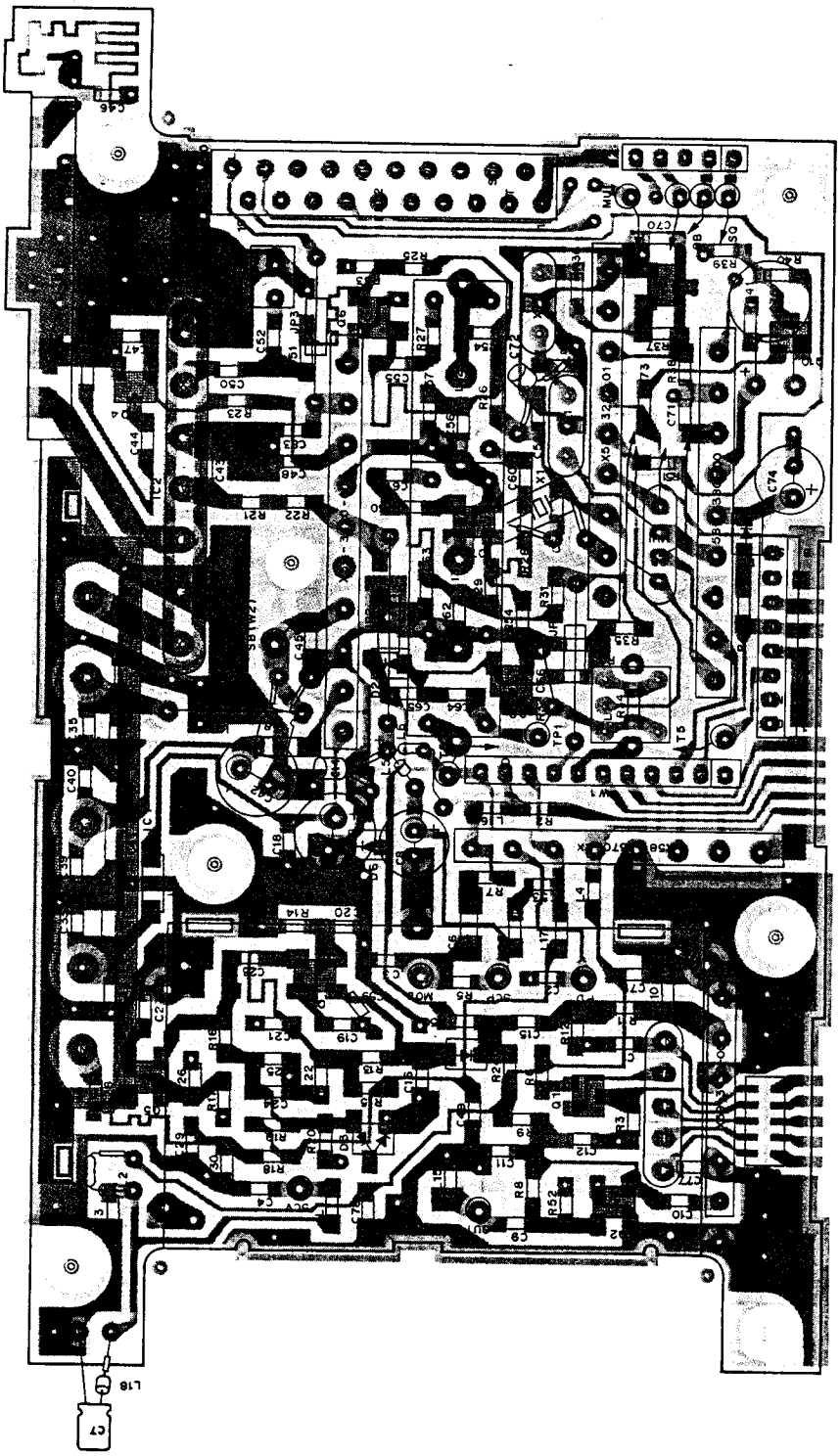

Q1 : DTA114YU Q2, 3, 5 : 2SC4093(R27) Q6, 7 : 2SC4095(R47.6) Q8 : 2SC3585(R44.3) Q9 : 2SC2714(O) Q10 : 2SJ144(GR)
IC1 : M57787 IC2 : MD-004
D1, 2, 6 : MA77 D3 : DA204K D4 : HSM88AS D5 : MA110

TX-RX UNIT (X57-3250-XX) Foil side view

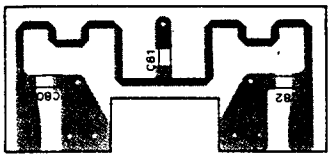

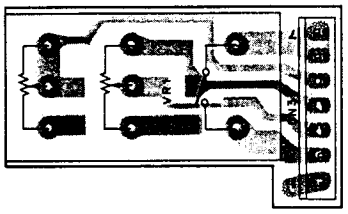

M57787

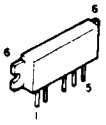

MD-004

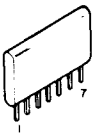

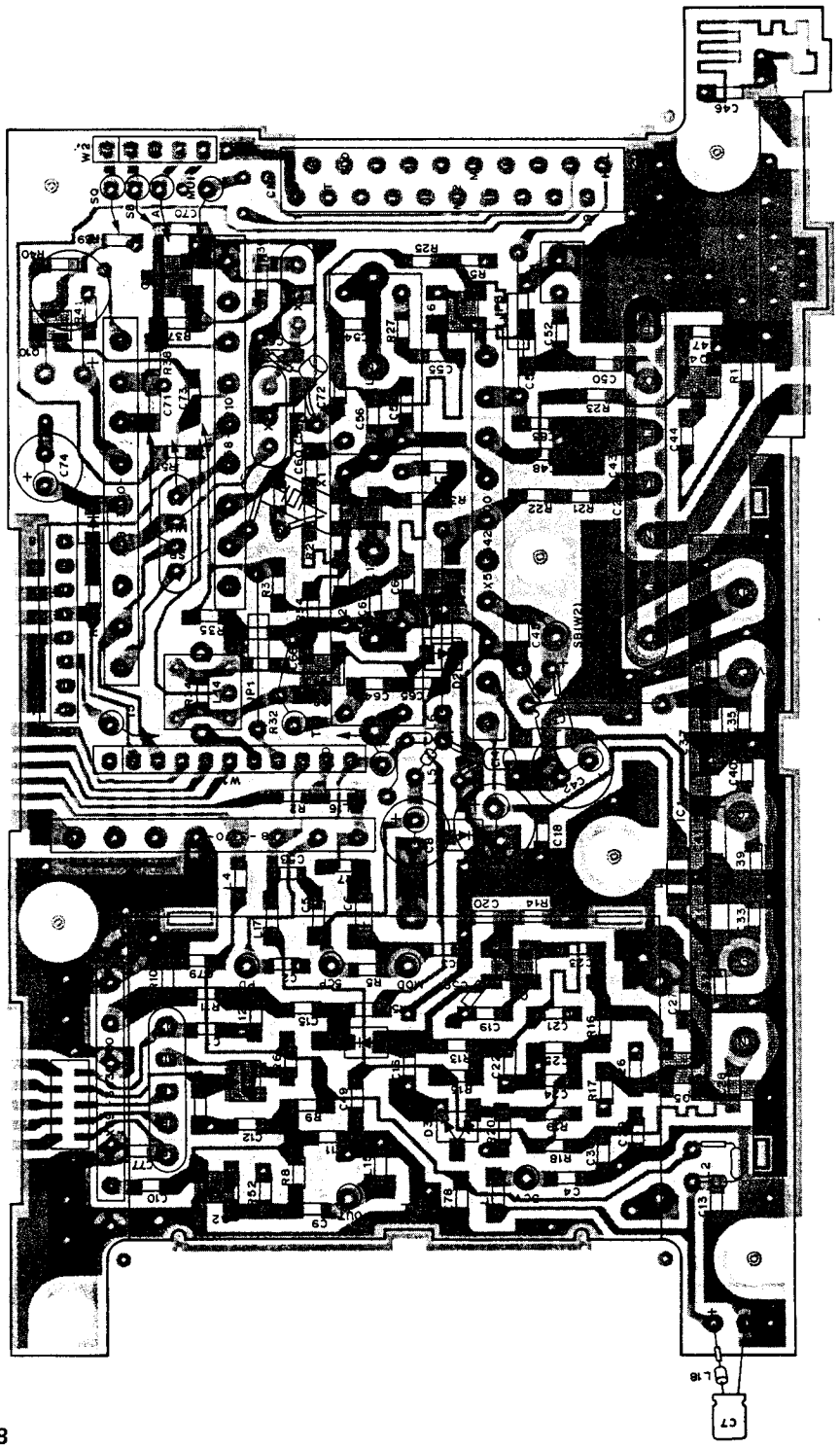

DTA114YU
2SC3585(R44.3)
2SC2714(O)

2SC4093(R27)
2SC4095(R47,6)

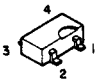

2SJ144(GR)

SCHEMATIC DIAGRAM TH-55AT/

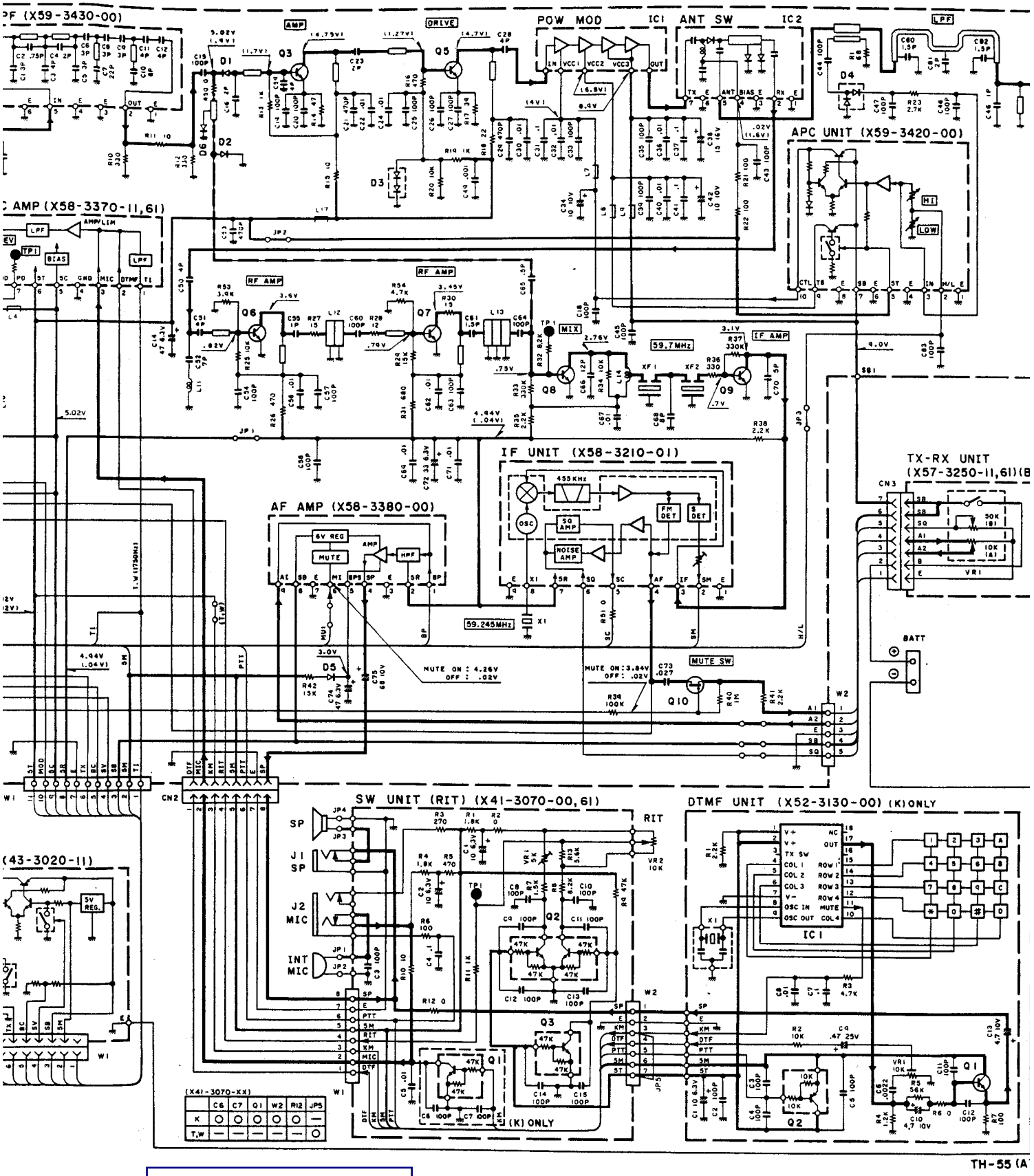

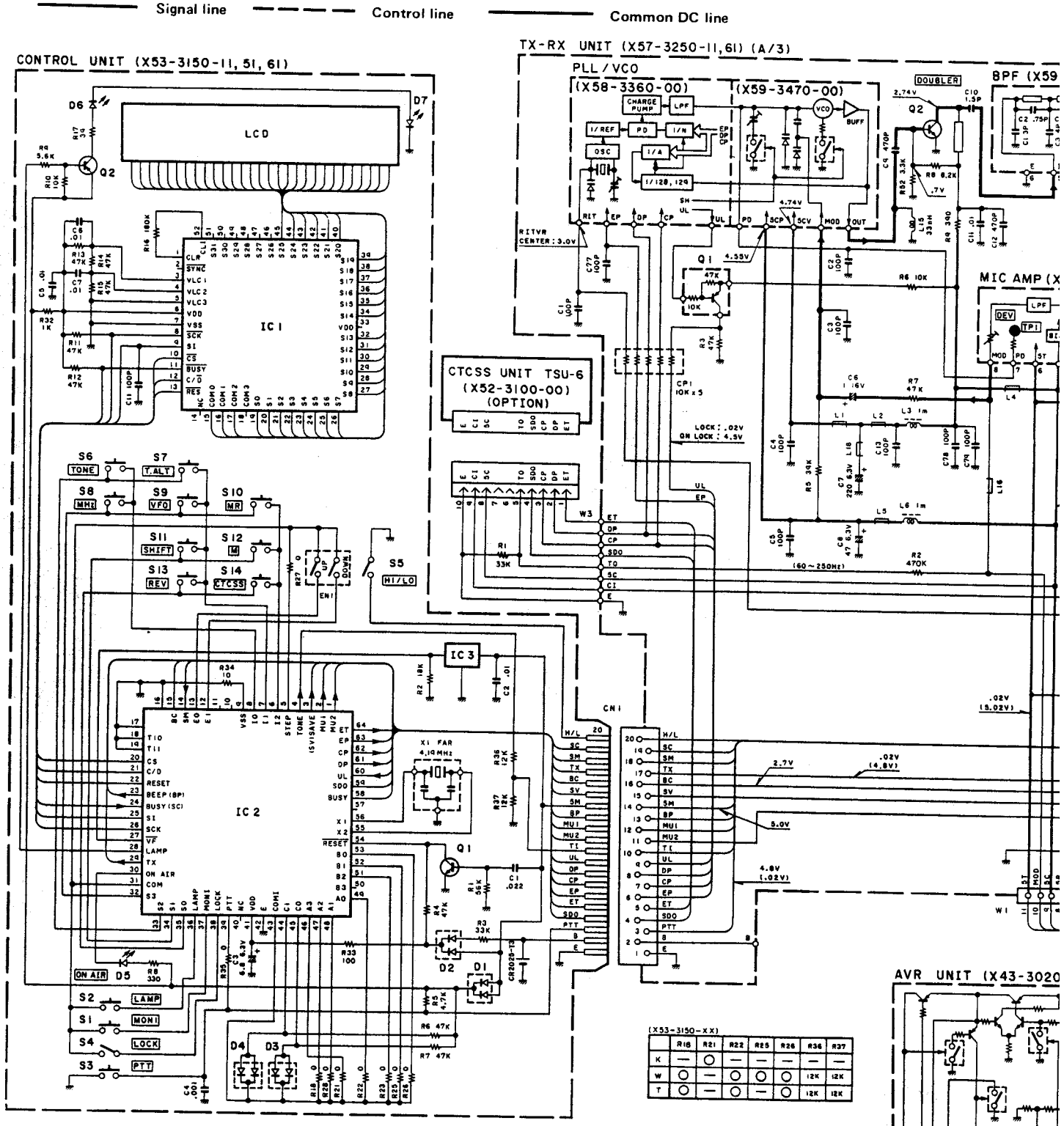

(X53-3150-XX)	R16	R21	R22	R25	R26	R36	R37
K	—	○	—	—	—	—	—
W	○	—	○	○	○	12K	12K
T	○	—	○	—	○	12K	12K

BLOCK DIAGRAM

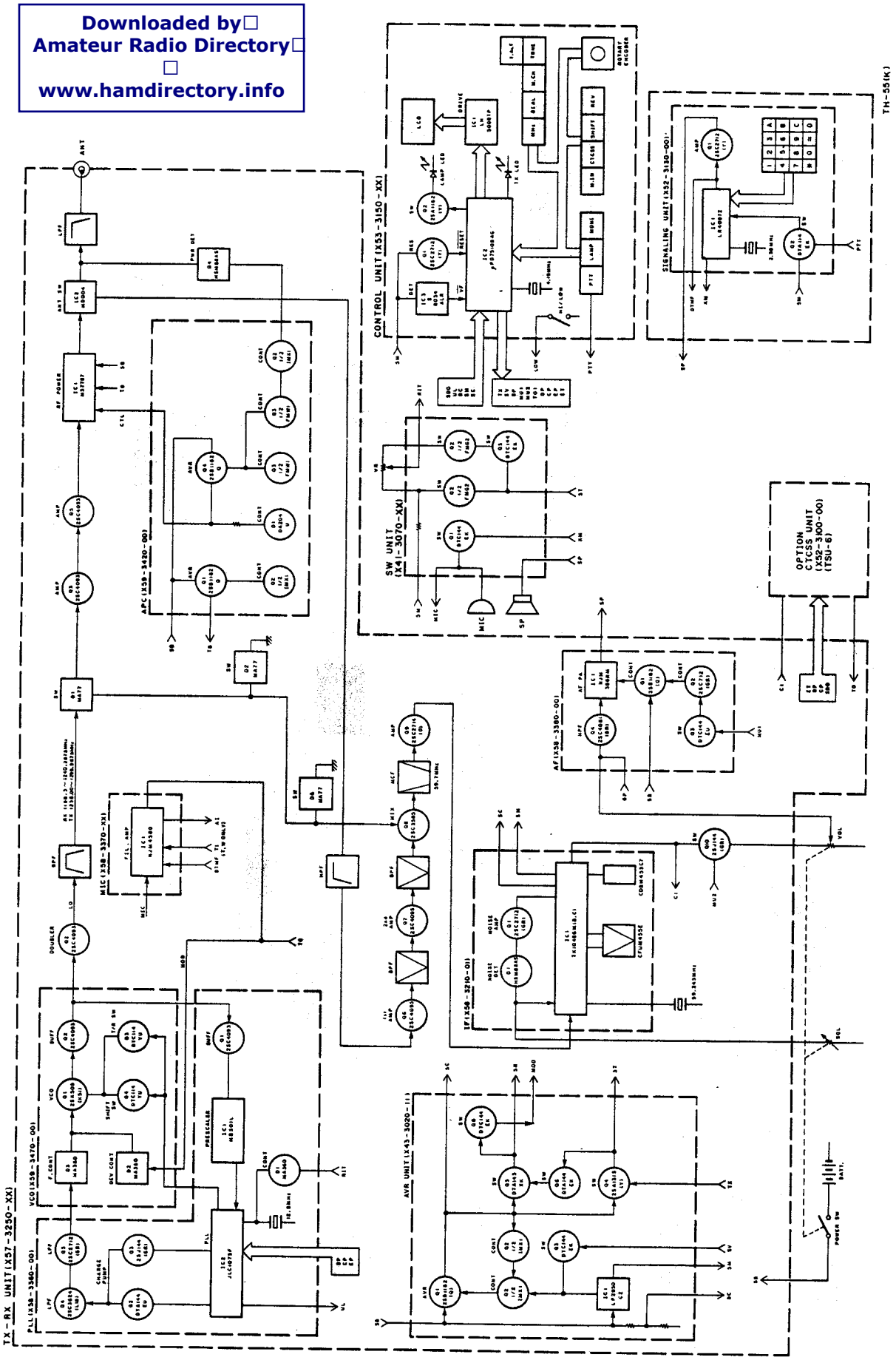

LEVEL DIAGRAM

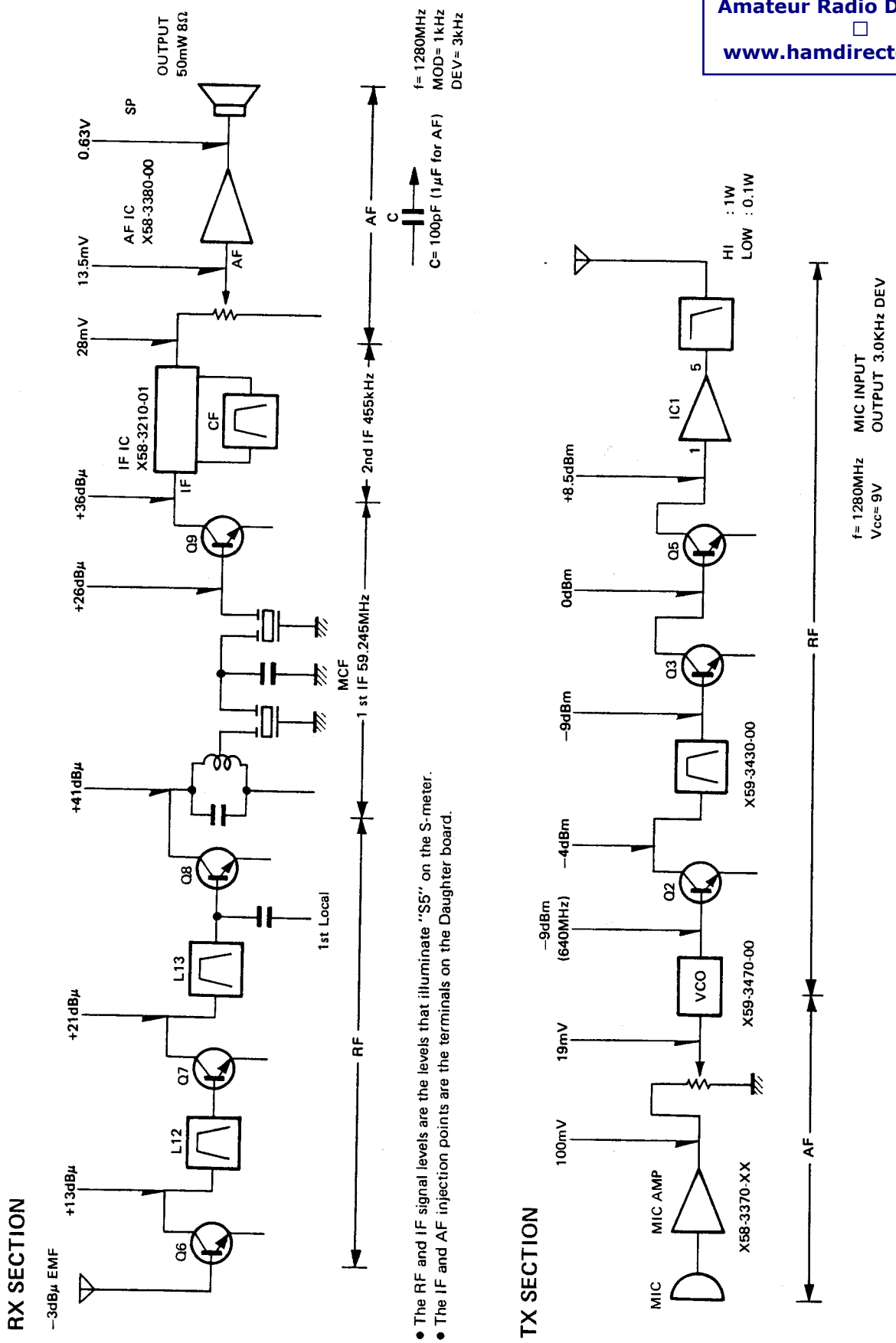

- The RF and IF signal levels are the levels that illuminate "S5" on the S-meter.
- The IF and AF injection points are the terminals on the Daughter board.

TERMINAL FUNCTIONS/BC-9 (BATTERY CHARGER)

Connector No.	Terminal No.	Terminal Name	Function
TX-RX UNIT (A/3) – CONTROL UNIT			
CN1	1	E	Ground.
	2	B	Not used.
	3	PTT	PTT SW signal. "L" : TX, "H" : RX.
	4	SDO	Tone signal match/mismatch identification signal.
	5	ET	Tone enable.
	6	EP	PLL enable.
	7	CP	Clock signal.
	8	DP	PLL tone serial data.
	9	UL	PLL unlock signal.
	10	TI	1750Hz tone signal. **TH-55E**
	11	MU2	Mute signal. "H" : Mute.
	12	MU1	Mute signal. "H" : Mute.
	13	BP	Beep signal.
	14	5M	5V power supply for MUP and MIC.
	15	SV	SAVE signal output. "L" : Save, "H" : Normal.
	16	BC	Battery voltage check signal.
	17	TX	Transmit/receive switching signal. "L" : TX, "H" : RX.
	18	SM	S-meter signal.
	19	SC	Busy signal.
	20	H/L	High/Low power switching signal.
TX-RX UNIT (A/3) – TSU-6			
W3	1	ET	Tone enable.
	2	DT	Tone serial data.
	3	CT	Clock signal.
	4	SDO	Tone signal match/mismatch identification signal.
	5	TO	Tone output.
	6	PTT	Not used.
	7	CO	Not used.
	8	5C	5V power supply.
	9	CI	Audio signal input.
	10	E	Ground.
TX-RX UNIT (A/3) – SWITCH UNIT			
CN2	1	DTMF	DTMF signal. **TH-55AT**
	2	MIC	Signal line from microphone.
	3	KM	MIC mute signal.
	4	RIT	RIT voltage.
	5	5M	5V power supply for MUP and MIC.
	6	PTT	External standby line.
	7	E	Ground.
	8	SP	Signal line to built in speaker.
TX-RX UNIT (A/3) – TX-RX UNIT (B/3)			
W2	1	A1	AF volume input line.
	2	A2	AF amplifier input line.
	3	E	Ground.
	4	SB	B power supply after power switch.
	5	SQ	Squelch volume input line.
TX-RX UNIT (A/3) – AVR UNIT			
W1	1	TI	Not used.
	2	5M	5V power supply for MPU and MIC.
	3	SB	B power supply after power switch.
	4	SV	Battery save signal.
	5	BC	Battery voltage check signal.
	6	TX	Transmit signal.
	7	E	Ground.
	8	5C	Common 5V power supply.
	9	5R	5V power supply for receive.
	10	MOD	Not used.
	11	5T	5V power supply for transmit.

BC-9 EXTERNAL VIEW

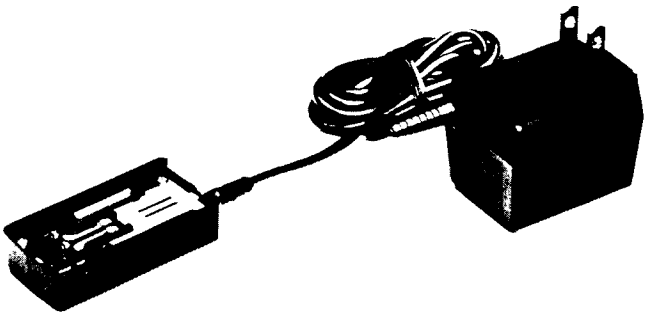

BC-9 PARTS LIST

* : New Parts

Ref. No.	New Parts	Parts No.	Description
		A02-0814-03	Case (Charge adapter)
		A40-0622-04	Bottom plate
		B42-3301-04	Label (LA) **(K)**
		E23-0494-04	Terminal ⊖
		E23-0605-04	Terminal ⊕
		G13-0852-04	Cushion
		J19-1426-03	Terminal holder

BC-10 (COMPACT CHARGER)

BC-10 EXTERNAL VIEW

BC-10 PARTS LIST

* : New Parts

Ref. No.	New Parts	Parts No.	Description
	*	A02-0828-08	Case (Upper) K,M,M2
	*	A02-0829-08	Case (Upper) X,T,W
	*	A02-0832-08	Case (Lower)
D7	*	B30-0858-08	LED SR615D
	*	B50-8203-08	Instruction manual K,M,M2,X,W
	*	B50-8204-08	Instruction manual T
	*	E30-2097-08	AC power cord K,M,M2
	*	E30-2098-08	AC power cord X
	*	E30-2099-08	AC power cord T
	*	E30-2100-08	AC power cord W
	*	L01-8027-08	Power transformer 220V M,W
	*	L01-8111-08	Power transformer 120V K,M2
	*	L01-8152-08	Power transformer 240V X,T
	*	W02-0805-08	Module
Q1		2SA1115(E)	Transistor
Q2		2SA1241(Y)	Transistor
Q3	*	2SC3076	Transistor
D1–4	*	DSF-10TB	Diode
D5, 6		1SS133	Diode

BC-10 PC BOARD VIEW

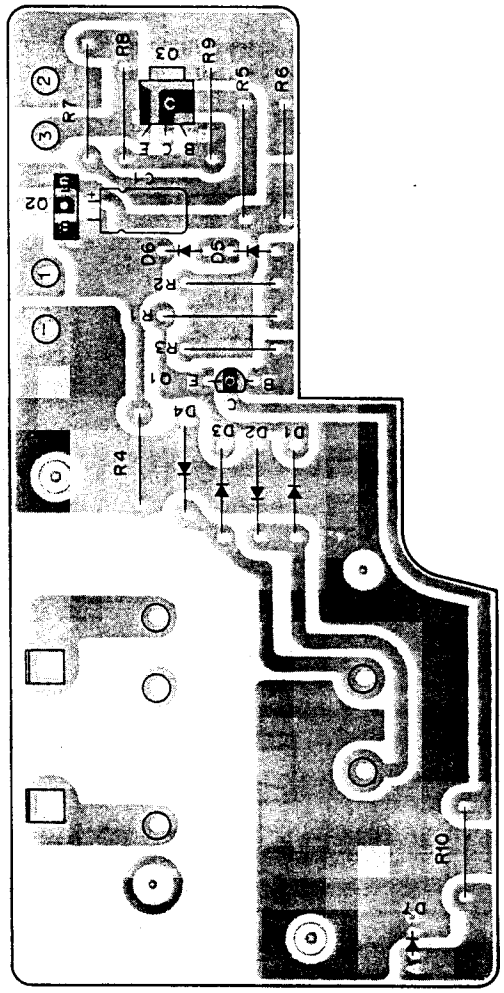

BC-10 CIRCUIT DIAGRAM

Q 1 : 2SA1115(E)
Q 2 : 2SA1241(Y)
Q 3 : 2SC3076

D 1 ~ 4 : DSF-10TB
D 5,6 : 1SS133
D 7 : B30-0858-08

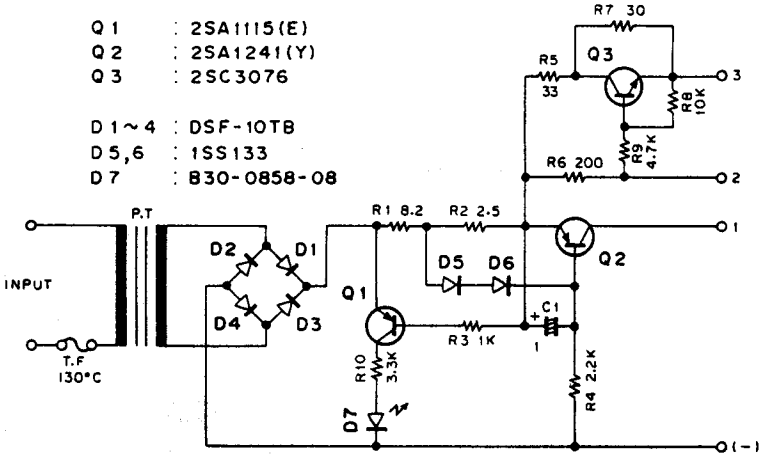

BC-11 (RAPID CHARGER)

BC-11 EXTERNAL VIEW

BC-11 CIRCUIT DESCRIPTION

General

The BC-11 is a rapid charger for the PB-5 to PB-9 Ni-Cd batteries for TH-25, TH-45 and TH-55.

Theory of Operation

The operation of each block is explained below.

1) + 11V AVR Circuit

This AVR circuit, consisting of a 2SD600F transistor (Q1) and DZA11Y Zener diode (DZ1) provides an output of approximately + 11V as the reference voltage for the charging circuit consisting of IC2 to IC5.

2) Battery Pack Detect Circuit

This circuit detects whether a battery pack is inserted in the charger. Outputs from this circuit are routed to the reset circuit and the battery recognition circuit.

When a PB-6 or PB-9 is inserted in the charger, a small amount of current flows from Q2 : 2SA608E through R9 to the charging terminal B1 and Q2 turns on. As a result, an output of approximately 11V appears at Ⓐ in **Figure 1**. Similarly when a PB-5 or PB-7 is inserted Q3 : 2SA608E turns on and approximately 11V is provided at output Ⓑ. When a PB-8 is inserted Q4 : 2SA608E turns on and approximately 11V is provided at output Ⓒ.

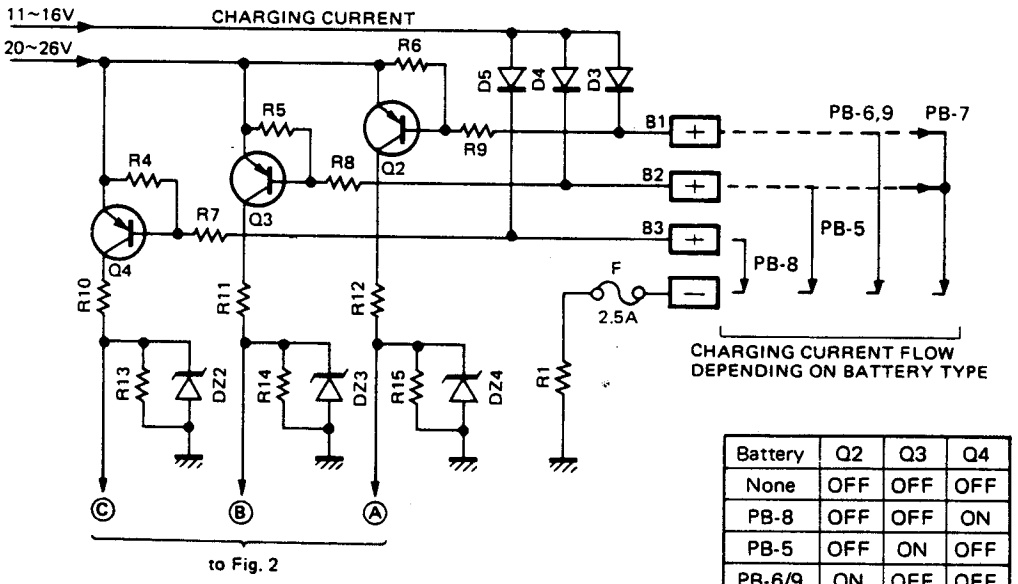

Battery	Q2	Q3	Q4
None	OFF	OFF	OFF
PB-8	OFF	OFF	ON
PB-5	OFF	ON	OFF
PB-6/9	ON	OFF	OFF
PB-7	ON	ON	OFF

Table 1

Fig. 1 Battery Pack Detect Circuit Block Diagram

BC-11 (RAPID CHARGER)

3) Reset Circuit/Charge Status Memory Circuit/ Display Circuit

The reset circuit initializes the charging status memory circuit.

	Q8,Q7	Q9	Q10	LED1
PACK OUT	OFF	OFF	ON	–
PACK IN				
• CHARGING	ON	ON	OFF	RED
• COMPLETE	ON	OFF	ON	GRN

Table 2

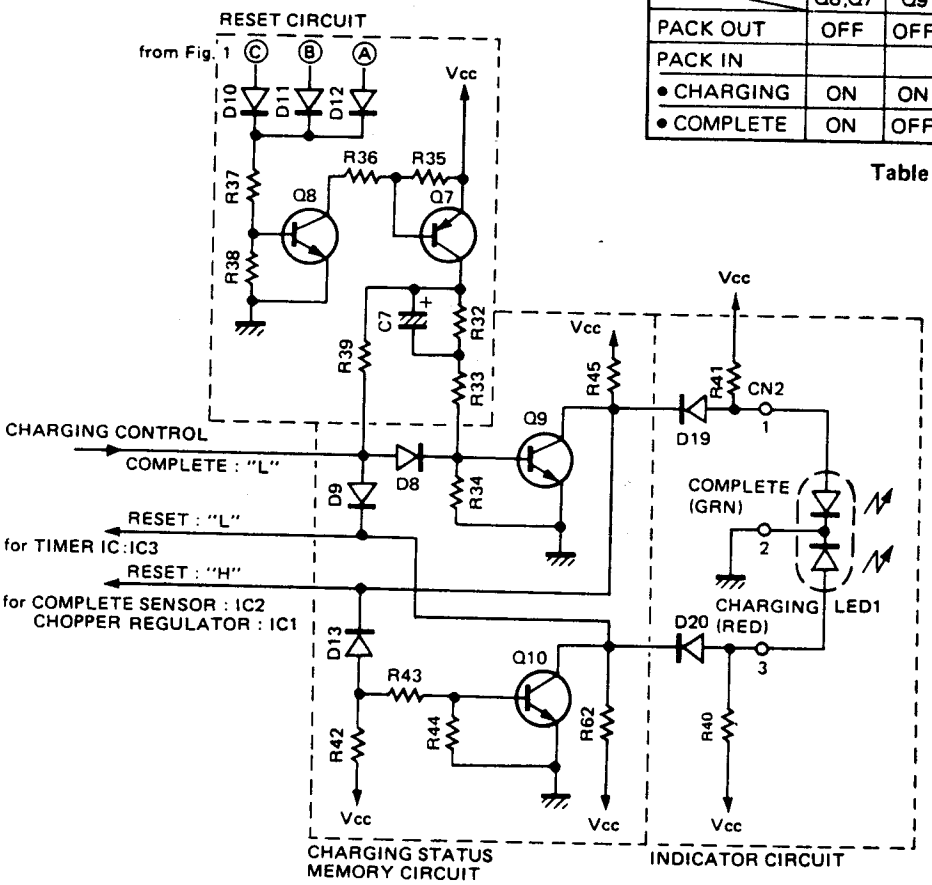

Fig. 2 Reset Circuit/Charge Status Memory Circuit/Display Circuit Block Diagram

The charge status memory circuit is an R-S flip-flop configured from transistors and resistors. The two states of the flip-flop are called COMPLETE and CHARGING. Outputs from the flip-flop drive the LED in the indicator circuit and reset the timer, complete sensor, and chopper regulator. In the COMPLETE state Q9 : 2SC536E is off and Q10 : 2SC536E is on. In the CHARGING state Q9 is on and Q10 is off.

When a battery pack is not inserted, Q8 : 2SC536E and Q7 : 2SC536E turn off. As there is no base voltage to Q9, Q9 also turns off. The base of Q10 receives enough bias from Vcc to turn on, resulting in 0V at the collector. The current flow through R41 to the COMPLETE indicator in LED1 which glows green, because of Q9 if off.

When the battery pack is inserted Q8 and Q7 turn on. As soon as Q7 turns on, charging current flows through R33, R34, and Q9 to C7 and Q9 turns on. The base voltage of Q10, which is connected to Q9 through diode D13, then drops and Q10 turns off. Since Q10 is off, current flows through R40 to the CHARGING indicator in LED1, which glows red to indicate that the battery is charging. When charging of C7 is completed, on-current continues to flow to the base of Q9 through R39 and D8.

When charging is completed the complete sensor (IC2) outputs a Low ("L")signal that ends the flow of current to the base of Q9, turning Q9 off. As a result current flows through R41 to the COMPLETE indicator in LED1, which glows green to indicate that charging is complete.

BC-11 (RAPID CHARGER)

4) Battery Recognition Circuit

The battery recognition circuit uses NAND logic to recognize the battery type from the outputs from the battery pack detect circuit. Outputs from this circuit are sent to the charging current limiting circuit and sensor level switching circuit.

	INPUT		OUTPUT		
	A	B	D	F	G
PB-5	L	H	H	H	L
PB-6	H	L	H	L	H
PB-7	H	H	L	L	H
PB-8	L	L	H	L	L
PB-9	H	L	H	L	H

Table 3

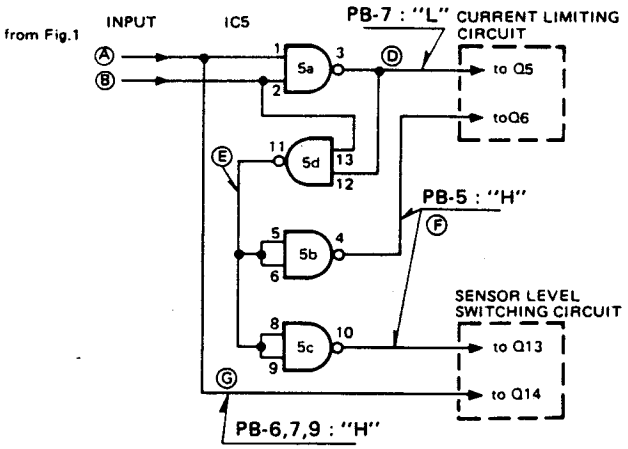

Fig. 3 Battery Recognition Circuit Block Diagram

5) Charging Current Limiting Circuit

This circuit receives the output of the battery recognition circuit and limits the charging current according to the type (current capacity) of battery. The charging current ICR is detected as a voltage drop across R1 (0.15Ω), which is provided to pin 3 of the operational amplifier IC4(1/2) : LA6393A. Pin 4 receives a reference voltage (V_{REF}) used as a comparison standard for limiting the charging current. The V_{REF} is changed by ON and OFF of Q5 and Q6 (See **Table 4**).

Pin 2 of IC4 : LA6393S provides "L" output when $V_{REF} < V_{CR}$, stopping the operation of the chopper regulator (IC1 : STK772B) and reducing the charging current. The charging current is limited by the formula :

I_{CR} MAX (A) = V_{REF} (V)/0.15(Ω)

	Q5	Q6	VREF	ICR MAX
PB-5	OFF	ON	0.15V	1.0A
PB-6	OFF	OFF	0.25V	1.7A
PB-7	ON	OFF	0.36V	2.4A
PB-8	OFF	OFF	0.25V	1.7A
PB-9	OFF	OFF	0.25V	1.7A

Table 4

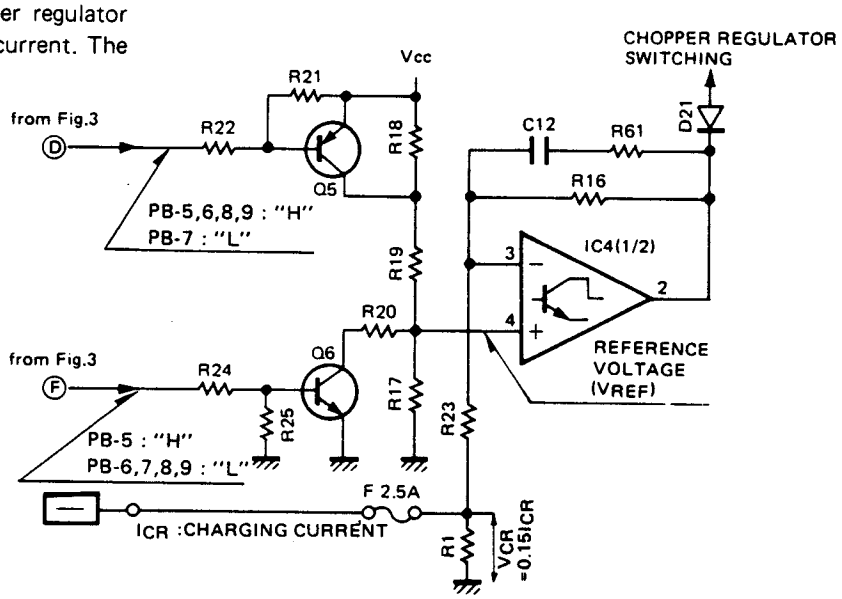

Fig. 4 Charging Current Limiting Circuit Block Diagram

BC-11 (RAPID CHARGER)

6) Sensor Level Switching Circuit

This circuit receives the output of the battery recognition circuit and aligns the voltages supplied to the charging status detect circuit according to the battery type (voltage) so that they are nearly equal at completion of charging.

	SHIFT Es(V)	Q11	Q12
PB-5	2.0	ON	OFF
PB-6	2.0	OFF	ON
PB-7	2.0	OFF	ON
PB-8	7.6	OFF	OFF
PB-9	2.0	OFF	ON

Table 5

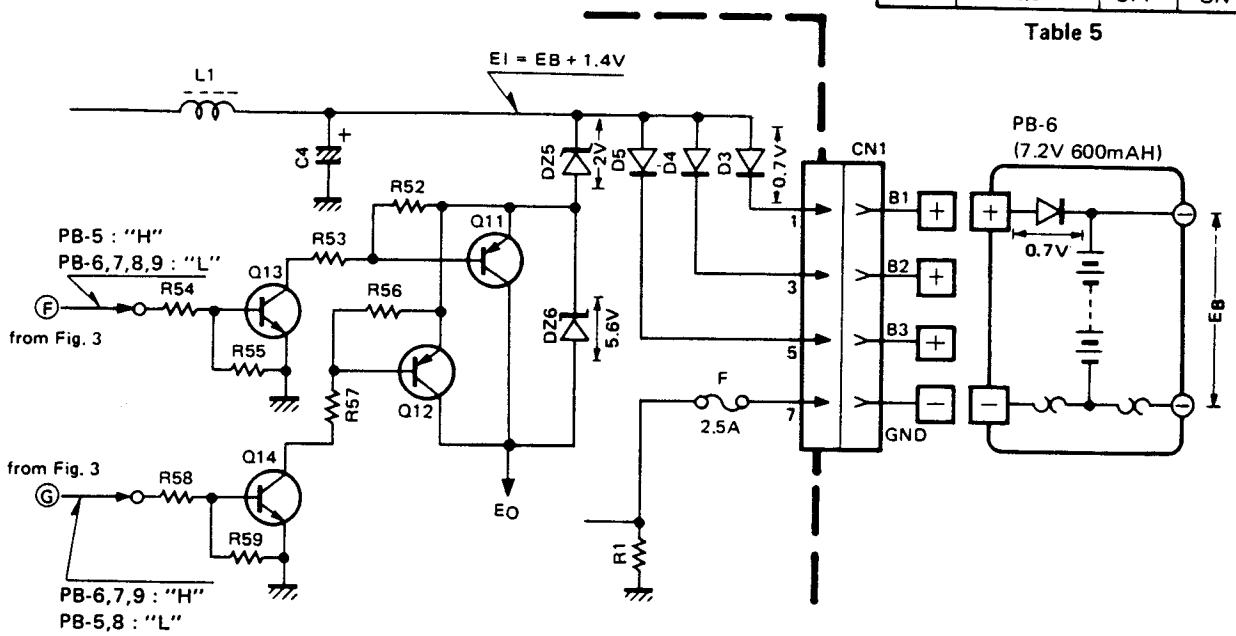

Fig. 5 Sensor Level Switching Circuit Block Diagram

The pin voltages while the Ni-Cd battery is charging are approximately 1.2 times the voltages at the completion of charging. (See **Figure 6**.)

The battery terminal voltage EB is as follows:

Approximately 14.4V for the PB-8

Approximately 8.6V for the PB-5, 6, 7, 9

The charging line voltage EI is the EB voltage plus a 1.4V voltage drop added by a diode.

EI = EB + 1.4V . . . . . (1)

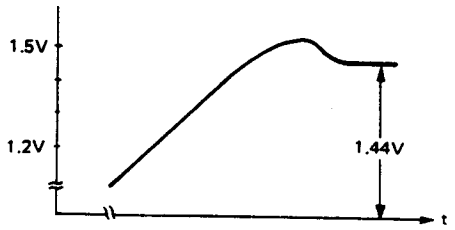

Fig. 6 The pin voltages while the Ni-CD Battery is charging

The EI voltage is output with a level shift as the voltage EO to the charging status detect circuit via Zener diode DZ6 and diodes D17 and D18. The amount of the shift is controlled by switching Q11 : 2SA608E and Q12 : 2SA608E on and off. (See **Table 5**.) If Eq. (1) is substitued into EO in **Table 5**, the results are:

PB-8 : EO = EB − 6.2V

PB-5, 6, 7, 9 : EO = EB − 0.6V

At the completion of charging the value is approximately 8V.

BC-11 (RAPID CHARGER)

7) Charging Status Detect Circuit

This circuit detects the completion of charging and outputs a signal to stop charging. When no battery pack is inserted or charging is completed, a High ("H") Reset signal is applied to D15. When a battery is inserted the Reset signal applied to D15 is cleared. When the Reset signal is cleared, pin 4 of IC2 : KCH-1003 holds the reset state due to the charge in C8 for the duration of the R46-C8 time constant, then goes "L" to clear the reset state. Pins 8 and 9 of IC2 receive divided portions of the battery voltage.
These inputs are tracked as the charging is performed in the long-term memory capacitor "MD". As the Ni-Cd battery charges, the battery voltage reaches a peak, then declines. (See **Figure 6**.) The MD stores the peak voltage, which is compared with the divided voltages at pins 8 and 9. When the difference ΔV is the same, a "L" signal is output fr. m pin 11 to indicate that charging is complete. The signal indicating completion of charging is applied to the charging status memory circuit.

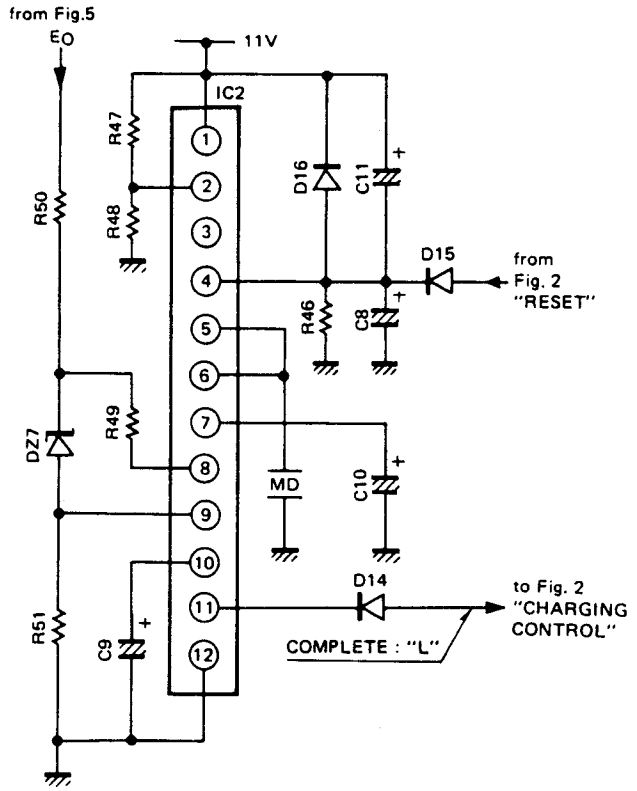

Fig. 7 Charging Status Detect Circuit Block Diagram

8) Timer Circuit

Battery defects may result in charging continuing indefinitely without completion, so this timer outputs a signal that stops charging approximately 1.7 hours after charging begins. When charging begins and the Reset signal is cleared at pin 3, IC3 : AN6780 begins counting. At the first count of 16384 pin 6 goes from "H" to "L".
The output from pin 6 is connected to the Stop input (pin 2), so the output of IC3 is held in the "L" state until IC3 receives another Reset signal (for example, when the battery is removed).

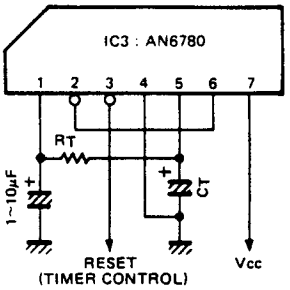

Fig. 8 Timer Circuit Block Diagram

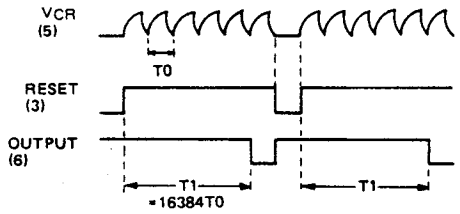

Fig. 9 TIMER TIME T1(s)≅11RT(KΩ)·CT(μF)
TIMER TIME T1(s)≅11×47(KΩ)·10(μF)=5170 (s)

9) Voltage Comparator Circuit

This circuit monitors the output (EO) of the sensor level switching circuit and indirectly detects abnormal conditions in the battery pack connected to the charging terminal. When the EO voltage falls to 5.2V or lower, the charging control line goes "L" to halt charging.

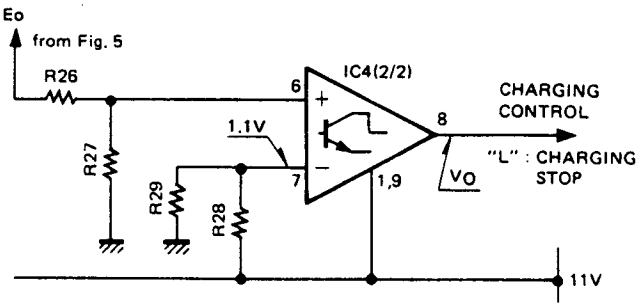

Fig. 10 Voltage Comparator Circuit Block Diagram

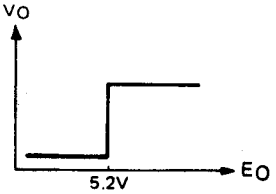

Fig. 11

BC-11 (RAPID CHARGER)

* New Parts
Parts without **Parts No.** are not supplied.
Les articles non mentionnes dans le **Parts No.** ne sont pas fournis.
Telle ohne **Parts No.** werden nicht geliefert.

BC-11 PARTS LIST

Ref. No. 参照番号	Address 位置	New Parts 新	Parts No. 部品番号	Description 部品名／規格	Destination 仕向	Remarks 備考
			BC-11			
1	1A	*	A02-0815-08	CASE		
2	1A,1B	*	A02-0817-08	BATTERY POCKET		
3	1B		B46-0411-00	WARRANTY CARD	K	
4	1B	*	B50-8134-08	INSTRUCTION MANUAL		
5	1B	*	E23-0604-05	TERMINAL		
⚠ 6	2A		E30-2038-08	AC CORD	K,M,M2	
⚠ 6	2A		E30-2072-08	AC CORD	W	
⚠ 6	2A		E30-2073-08	AC CORD	T	
⚠ 6	2A		E30-2095-08	AC CORD	X	
8	2B	*	H01-8128-08	ITEM CARTON CASE		
9	2B		H10-2584-02	POLYSTYRENE FOAMED FIXTURE (L)		
10	2B		H10-2585-02	POLYSTYRENE FOAMED FIXTURE (R)		
11	3A		J02-0439-05	FOOT		
12	3A		J39-0424-05	SPACER		
⚠ T1	2A		L01-8081-08	POWER TRANSFORMER (AC120V)	K,M2	
⚠ T1	2A		L01-8112-08	POWER TRANSFORMER (AC220V)	M,W	
⚠ T1	2A		L01-8122-08	POWER TRANSFORMER (AC240V)	T,X	
A	3A		N30-3006-41	MACHINE SCREW (M3 X 6)		
B	2A,1B		N34-4006-46	MACHINE SCREW (M4 X 6 TR)		
C	2A,1B		N35-4006-45	MACHINE SCREW (M4 X 6 BI) BLK		
D	2A		N87-3008-46	TAPTITE SCREW (φ3 X 8 BR)		
E	1A		N89-3008-45	TAPTITE SCREW (φ3 X 8 BI) BLK		
SW1	3A		S36-1407-05	POWER SW		
7	3B	*	W02-0399-08	CHARGE CONTROL UNIT		
			CHARGE CONTROL UNIT (W02-0399-08)			
C1			CE04EW1V222M	ELECTRO 2200μF 35WV		
C2			CE04EW1C470M	ELECTRO 47μF 16WV		
C3			CE04EW1H010M	ELECTRO 1μF 50WV		
C4			CE04EW1E471M	ELECTRO 470μF 25WV		
C5,6			CE04EW1C100M	ELECTRO 10μF 16WV		
C7			CE04EW1A101M	ELECTRO 100μF 10WV		
C8			CE04EW1C100M	ELECTRO 10μF 16WV		
C9,10			CE04EW0J101M	ELECTRO 100μF 6.3WV		
C11			CE04EW1C330M	ELECTRO 33μF 16WV		
C12			CK45B1H102K	CERAMIC 0.001μF 50WV		
C14			CE04EW1H010M	ELECTRO 1μF 50WV		

E: Scandinavia & Europe H:Audio Club K: USA P: Canada W:Europe
A: Saudi Arabia T: England U: PX(Far East, Hawaii)
UE : AAFES(Europe) X: Australia M: Other Areas

⚠ indicates safety critical components.

BC-11 (RAPID CHARGER)

⁎ New Parts
Parts without **Parts No.** are not supplied.
Les articles non mentionnes dans le **Parts No.** ne sont pas fournis.
Teile ohne **Parts No.** werden nicht geliefert.

Ref. No. 参照番号	Address 位置	New Parts 新	Parts No. 部品番号	Description 部品名／規格	Destination 仕向	Remarks 備考
MD			C91-1038-08	ELECTRO		
⚠ F1			F05-2525-05	FUSE (2.5A)	W,X	
⚠ F1			F06-2522-05	FUSE (2.5A)	M,M2,T	
⚠ F1			F06-2523-05	FUSE (2.5A)	K	
–			J13-0039-05	FUSE HOLDER	W	
L1			L33-0694-08	CHOKE COIL (470μH)		
R1			R92-0683-08	FL-PROOF 0.15Ω 4W		
D1–5			DSA26B	DIODE		
D6–16			DS442	DIODE		
D19–21			DS442	DIODE		
DZ1			GZA11Y	ZENER DIODE (11V)		
DZ2–4			GZA10Z	ZENER DIODE (10V)		
DZ5			GZA2.0X	ZENER DIODE (2V)		
DZ6			GZA5.6X	ZENER DIODE (5.6V)		
DZ7			GZA7.5Y	ZENER DIODE (7.5V)		
DZ8			GZA3.0X	ZENER DIODE (3V)		
IC1			STK772B	IC (CHOPPER REGULATOR)		
IC2			KCH-1003	IC (VOLTAGE SENSOR)		
IC3			AN6780	IC (TIMER)		
IC4			LA6393S	IC (DUAL OP IC)		
IC5			LC4011B	IC (QUADRUPLE NAND GATE)		
Q1			2SD600F,KF	TRANSISTOR		
Q2–5			2SA608E,F	TRANSISTOR		
Q6			2SC536E,F	TRANSISTOR		
Q7			2SA608E,F	TRANSISTOR		
Q8–10			2SC536E,F	TRANSISTOR		
Q11,12			2SA608E,F	TRANSISTOR		
Q13,14			2SC536E,F	TRANSISTOR		
LED1	2A		SLP-540D	LED (RED/GRN)		

BC-11 BLOCK DIAGRAM

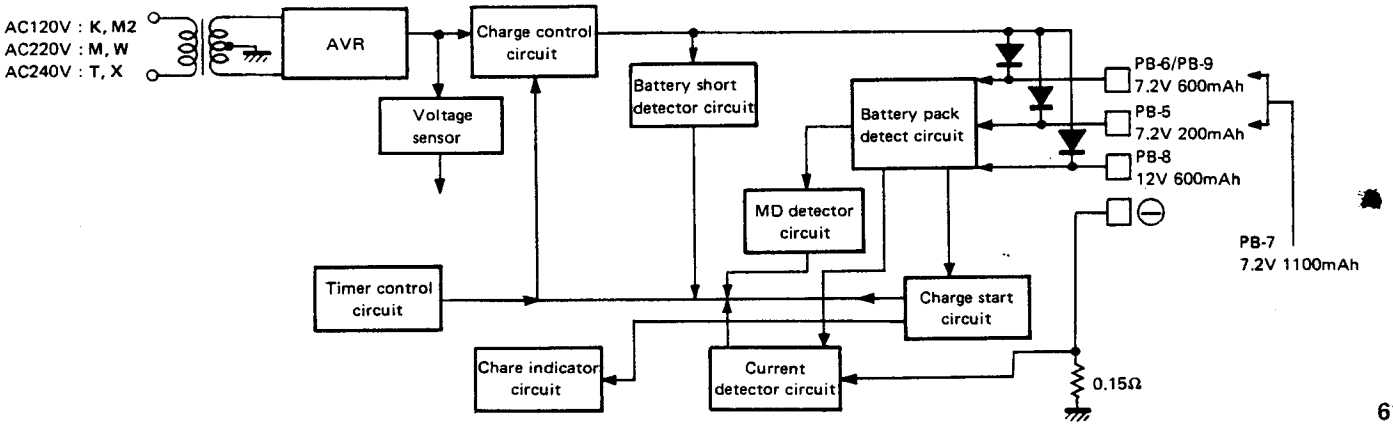

BC-11 (RAPID CHARGER)

BC-11 DISASSEMBLY/PACKING

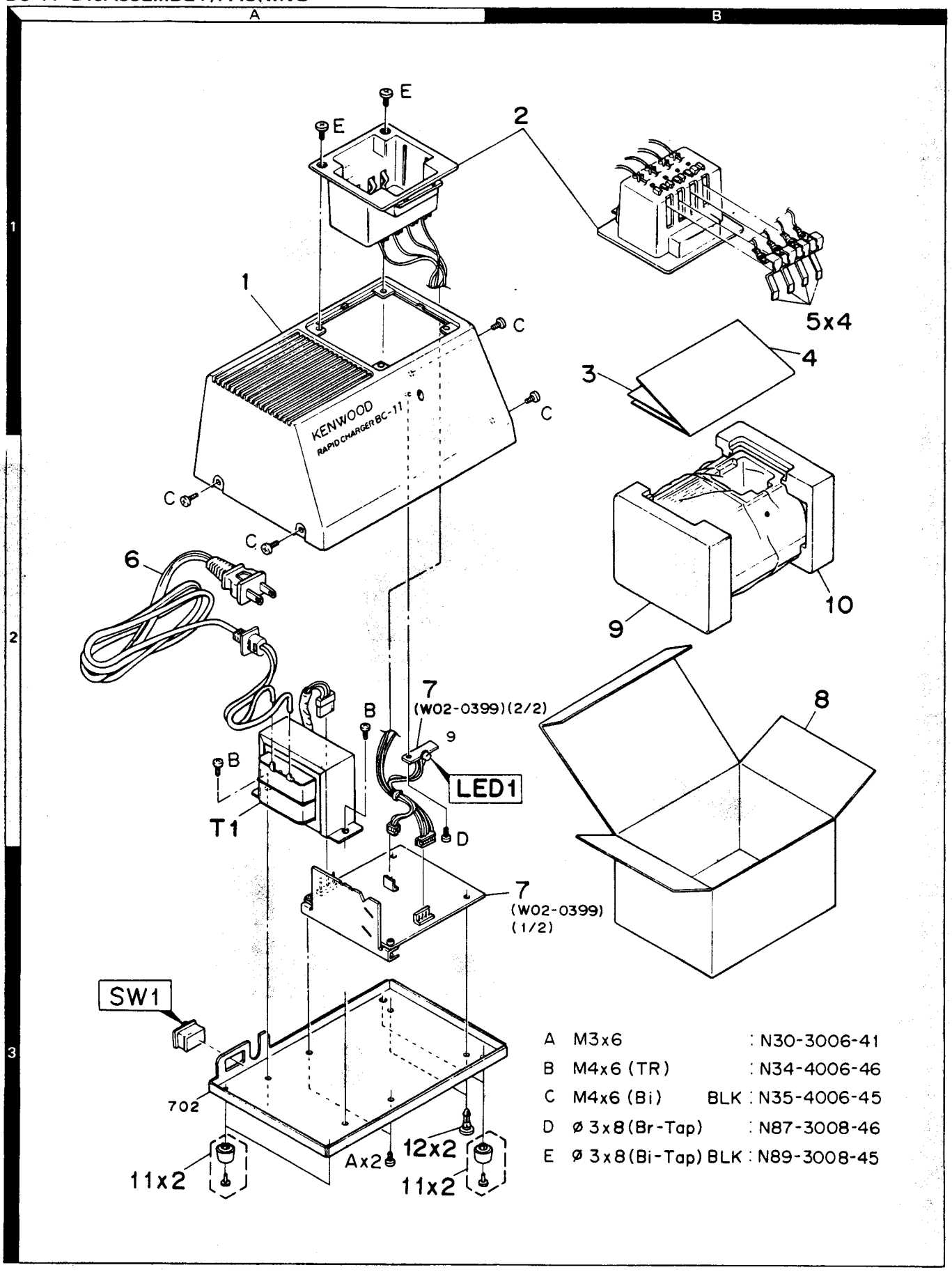

A	M3x6		: N30-3006-41
B	M4x6 (TR)		: N34-4006-46
C	M4x6 (Bi)	BLK	: N35-4006-45
D	ø 3x8 (Br-Tap)		: N87-3008-46
E	ø 3x8 (Bi-Tap)	BLK	: N89-3008-45

Parts with the exploded numbers larger than 700 are not supplied.

BC-11 (RAPID CHARGER)

BC-11 PC BOARD VIEW

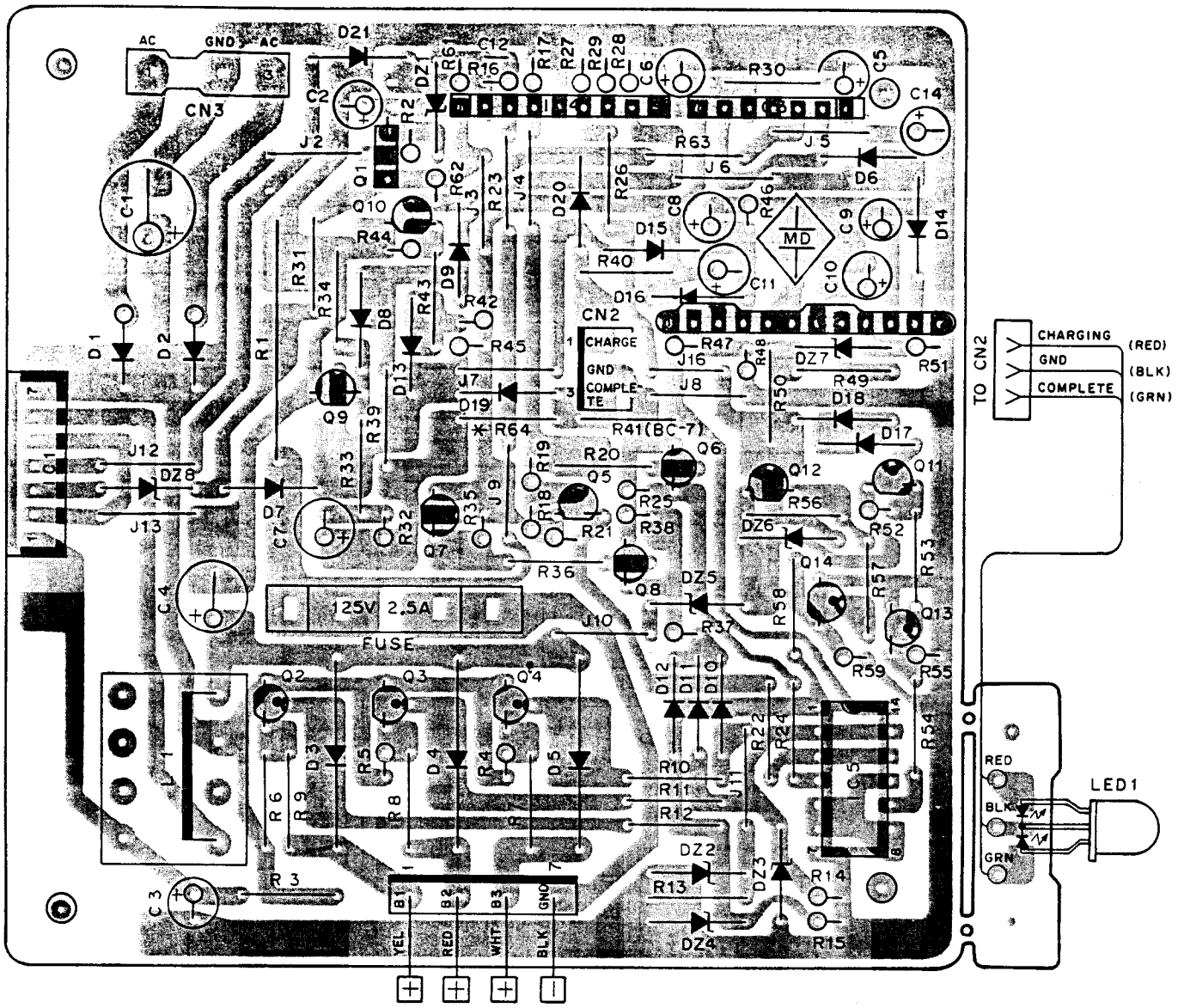

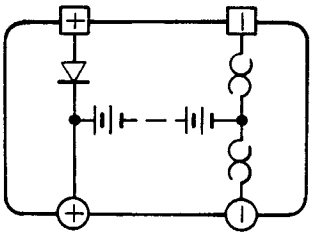

PB-6
(7.2V 600mA)

Q1 : 2SD600F,KF Q2–5,7,11,12 : 2SA608E,F Q6,8–10,13,14 : 2SC536E,F
IC1 : STK772B IC2 : KCH-1003 IC3 : AN6780 IC4 : LA6393S IC5 : LC4011B
D1–5 : DSA26B D6–16,19–21 : DS442
DZ1 : GZA11Y DZ2–4 : GZA10Z DZ5 : GZA2.0X DZ6 : GZA5.6X DZ7 : GZA7.5Y DZ8 : GZA3.0X

2SA608E
2SA608F

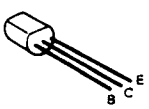

2SC536E 2SD600F
2SC536F 2SD600KF

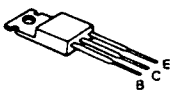

AN6780

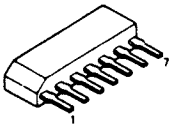

LC4011B

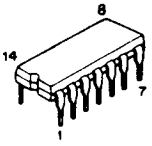

LA6393S

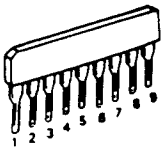

BC-11 (RAPID CHARGER)

BC-11 CIRCUIT DIAGRAM

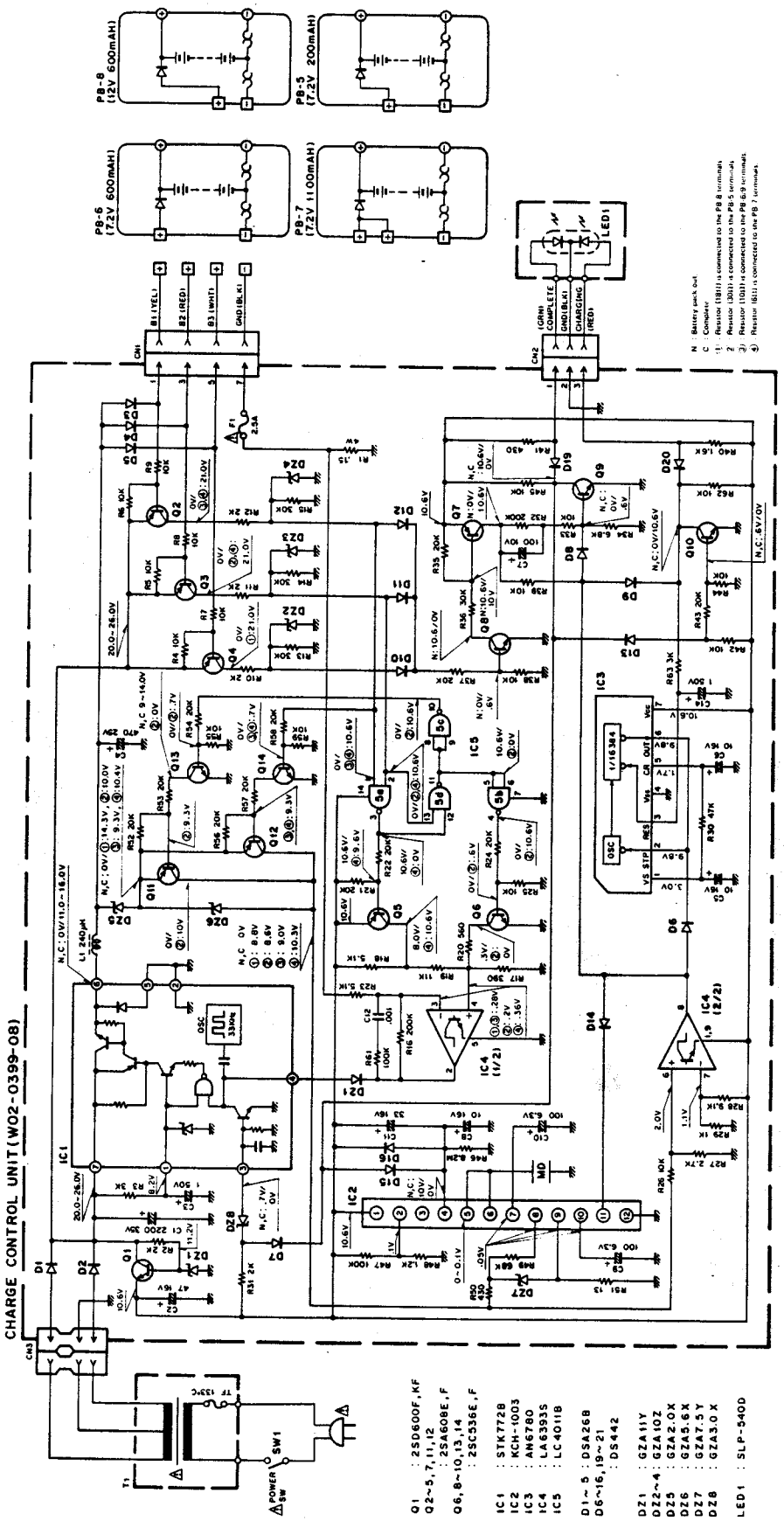

BT-6 (AAA MANGANESE/ALKALINE BATTERY CASE)/ DC-1 (DC ADAPTER)

BT-6 EXTERNAL VIEW

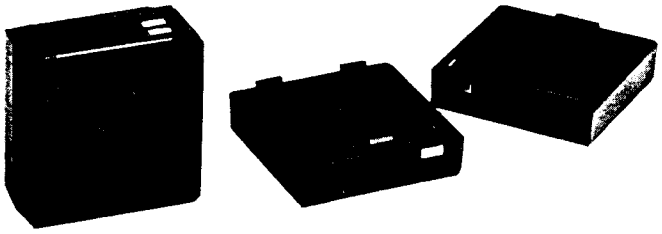

BT-6 PARTS LIST

* : New Parts

Ref. No.	New Parts	Parts No.	Description
1	*	E23-0496-04	Terminal A
2	*	E23-0497-04	Terminal B
3	*	E23-0498-04	Terminal C
4	*	E23-0499-04	Terminal D
5	*	E23-0500-04	Terminal E
6	*	E23-0601-04	Terminal F

BT-6 DISASSEMBLY

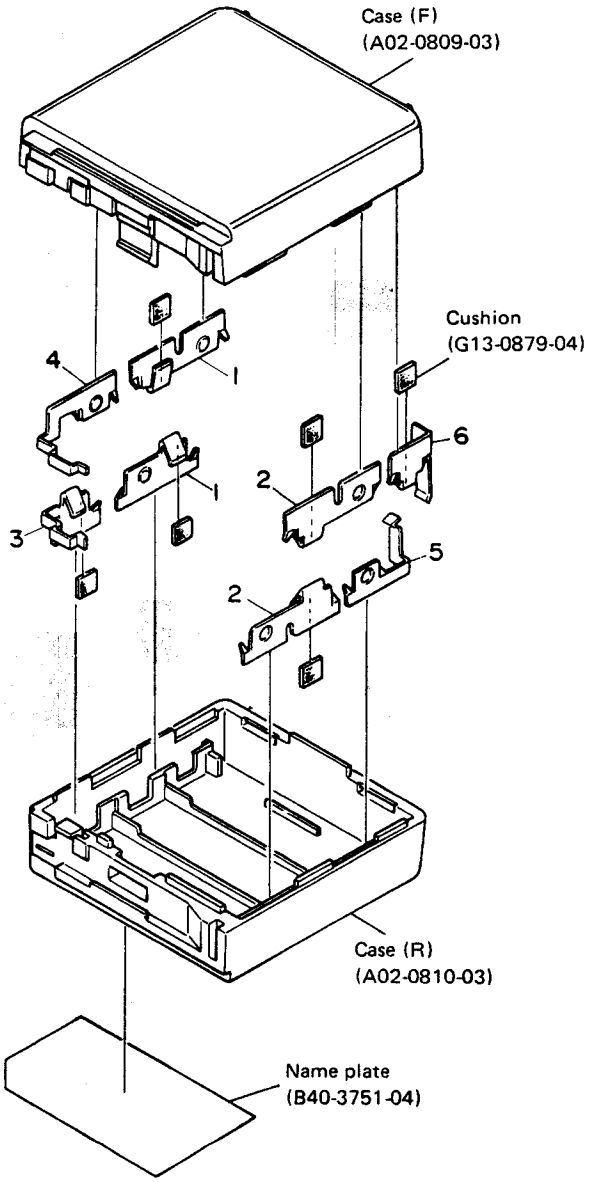

DC-1 EXTERNAL VIEW

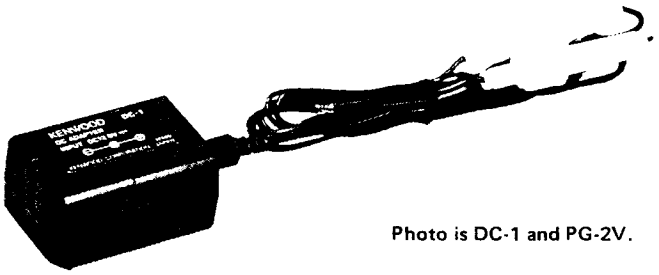

Photo is DC-1 and PG-2V.

DC-1 PARTS LIST

* : New Parts

Ref No.	New Parts	Parts No.	Description
C1		CW04EW1C102M	Electro 1000μF 16WV
J1		E03-0165-05	DC jack
		F06-3026-05	Fuse (3A)
	*	J13-0410-05	Fuse holder
D1		DSA3A1	Diode

DC-1 CIRCUIT DIAGRAM

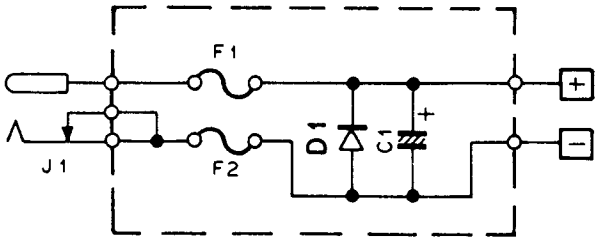

D1 : DSA3A1

DC-1 SPECIFICATIONS

Electrical characteristic

Max. input voltage 16V

Max. current 2A

Dimensions . . . . . 58 W x 36.5 H x 29.5 D (mm)

Weight 40g