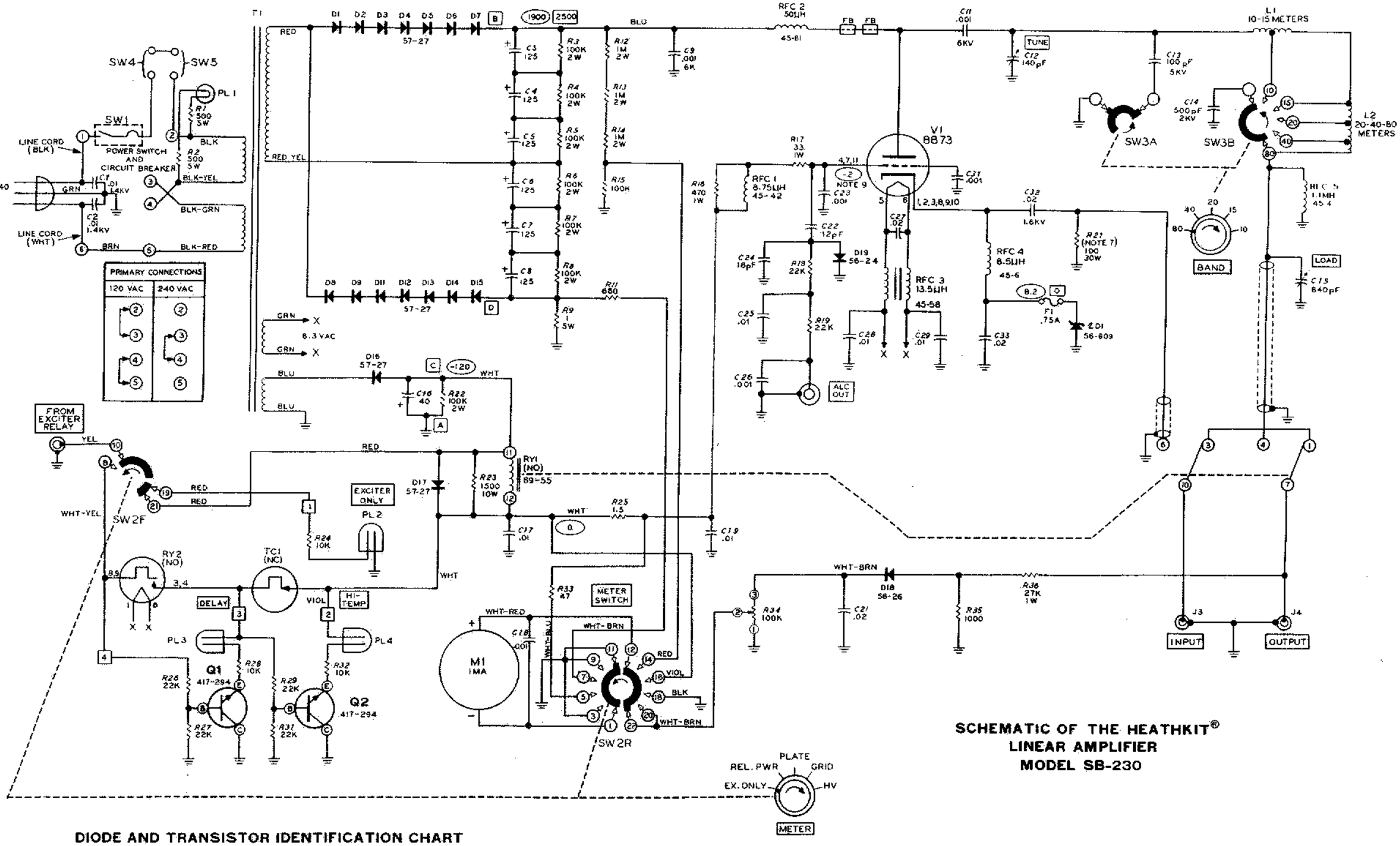

SCHEMATIC OF THE HEATHKIT® LINEAR AMPLIFIER MODEL SB-230

DIODE AND TRANSISTOR IDENTIFICATION CHART

COMPONENT	HEATH PART NO.	MAY BE REPLACED WITH	IDENTIFICATION
D1 THROUGH D17 D18 D19 ZD1	57-27 56-26 56-24 56-609	1N2071 1N191 1N458 1N2806A (8.2V, 1.5A)	NOTE: DIODES MAY BE SUPPLIED IN ANY OF THE FOLLOWING FIVE SHAPES. HEATH PART NUMBERS ARE STAMPED ON MOST DIODES. 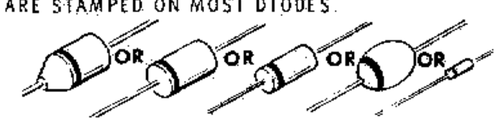
Q1, Q2	417-294	MPSA42	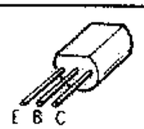

NOTES:

1. ALL RESISTOR VALUES ARE IN OHMS (K=1,000; M=1,000,000).
2. ALL CAPACITOR VALUES ARE IN MICROFARADS UNLESS OTHERWISE MARKED (pF=PICOFARADS).
3. RELAY CONTACTS ARE IN THE INACTIVATED POSITION (RECEIVE OR EXCITER ONLY).
4. SWITCH CONTACTS ARE SHOWN REAR VIEW. THE SWITCH POSITION IS SHOWN IN THE KNOB VIEW. AN ARROW SHOWS SWITCH MOVEMENT WITH CLOCKWISE ROTATION OF THE KNOB.
5. REFER TO THE CHASSIS PHOTOGRAPHS AND X-RAY VIEWS FOR THE ACTUAL LOCATION OF PARTS.
6. K = 1,000 — pF = PICOFARADS
   KV = KILOVOLTS — PL = PILOT LAMP
   M = 1,000,000 — T.S. = THERMAL SWITCH
   MH = MILLIHENRIES — µH = MICROHENRIES
7. R21 IS COMPOSED OF FIFTEEN 1500Ω, 2-WATT RESISTORS CONNECTED IN PARALLEL TO FORM A 100Ω, 30 WATT RESISTANCE.
8. ⬭ = DC VOLTS AT 500mA PLATE CURRENT.
   ▭ = DC VOLTS AT 25mA PLATE CURRENT.
   □ = CIRCUIT BOARD HOLE OR PIN.
   FB = FERRITE BEAD
9. GRID VOLTS = -110 WITH METER SWITCH AT "EXCITER ONLY".