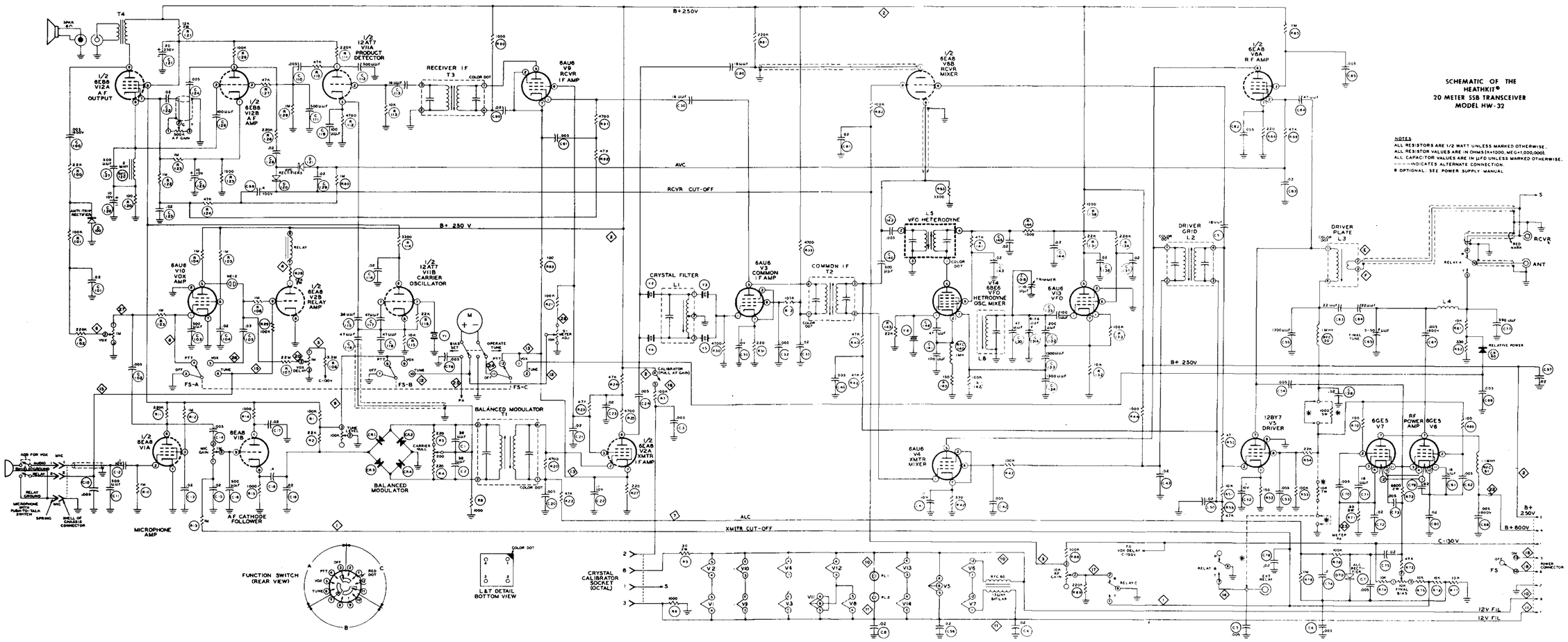
SCHEMATIC OF THE
HEATHKIT®
20 METER SSB TRANSCEIVER
MODEL HW-32
NOTES
ALL RESISTORS ARE 1/2 WATT UNLESS MARKED OTHERWISE.
ALL RESISTOR VALUES ARE IN OHMS (K=1000, MEG=1,000,000).
ALL CAPACITOR VALUES ARE IN µFD UNLESS MARKED OTHERWISE.
– – – – INDICATES ALTERNATE CONNECTION.
* OPTIONAL. SEE POWER SUPPLY MANUAL
B+250V
AVC
RCVR CUT-OFF
B+ 250 V
ALC
XMTR CUT-OFF
1/2 6EB8 V12A AF OUTPUT
1/2 6EB8 V12B AF AMP
1/2 12AT7 V11A PRODUCT DETECTOR
RECEIVER IF T3
6AU6 V9 RCVR IF AMP
1/2 6EA8 V8B RCVR MIXER
1/2 6EA8 V8A RF AMP
6AU6 V10 VOX AMP
1/2 6EA8 V12B RELAY AMP
1/2 12AT7 V11B CARRIER OSCILLATOR
CRYSTAL FILTER L1
6AU6 V3 COMMON IF AMP
COMMON IF T2
L5 VFO HETERODYNE
V14 6BE6 VFO HETRODYNE OSC MIXER
6AU6 V13 VFO
DRIVER GRID L2
DRIVER PLATE L3
L4
RCVR
ANT
1/2 6EA8 V1A
6EA8 V1B
MICROPHONE AMP
A.F. CATHODE FOLLOWER
BALANCED MODULATOR
BALANCED MODULATOR T1
1/2 6EA8 V2A XMTR I.F. AMP
6AU6 V4 XMTR MIXER
12BY7 V5 DRIVER
6GE5 V7
RF POWER AMP 6GE5 V8
B+ 250V
B+800V
C-30V
12V FIL
FS-A
FS-B
FS-C
FUNCTION SWITCH (REAR VIEW)
L&T DETAIL BOTTOM VIEW
CRYSTAL CALIBRATOR SOCKET (OCTAL)
POWER CONNECTOR

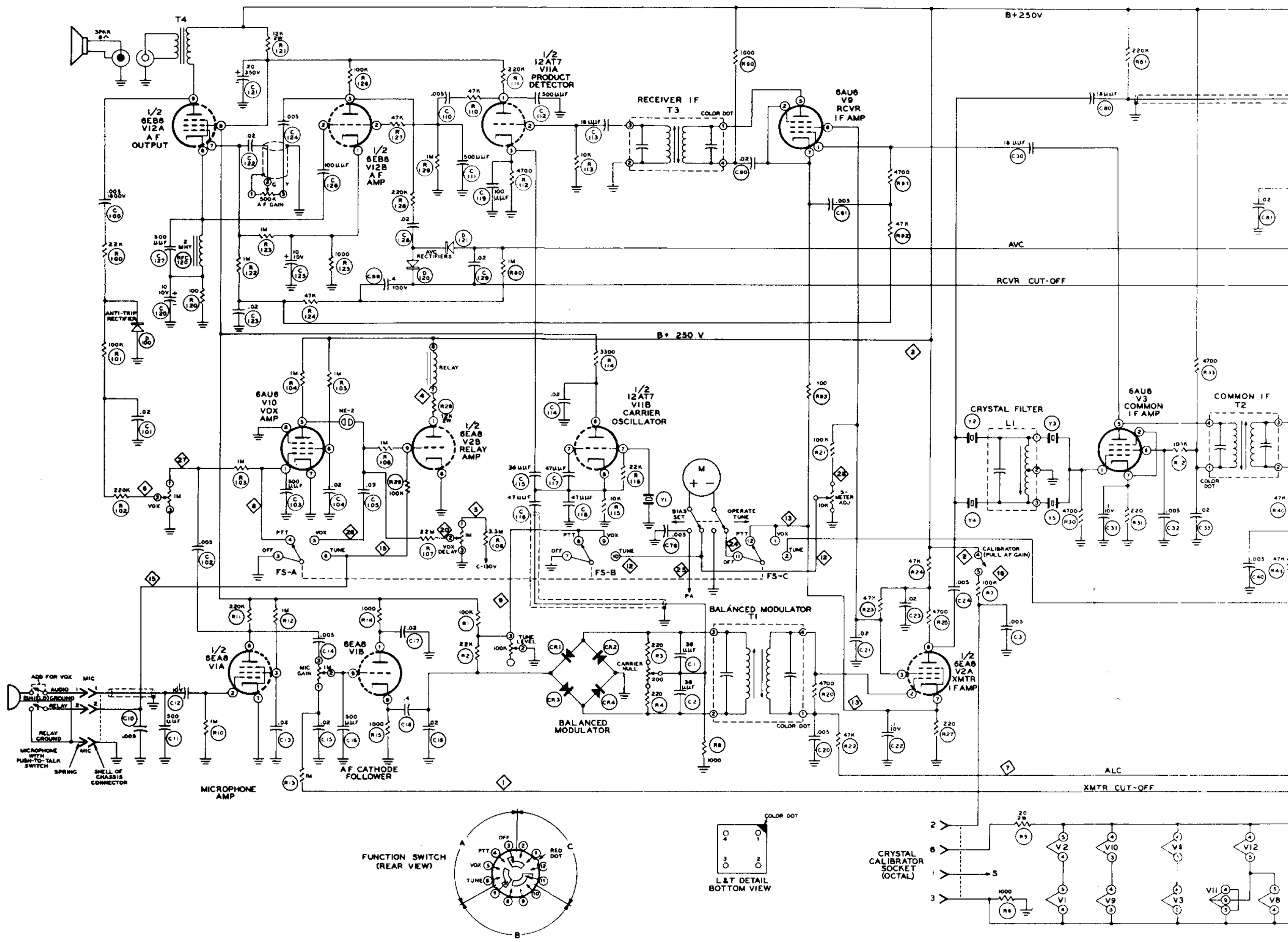
B+250V
AVC
RCVR CUT-OFF
B+ 250 V
ALC
XMTR CUT-OFF
T4
1/2 6EB8 V12A AF OUTPUT
1/2 6EB8 V12B AF AMP
1/2 12AT7 V11A PRODUCT DETECTOR
RECEIVER IF T3
6AU6 V9 RCVR IF AMP
6AU6 V10 VOX AMP
1/2 6EA8 V2B RELAY AMP
1/2 12AT7 V11B CARRIER OSCILLATOR
CRYSTAL FILTER
6AU6 V3 COMMON IF AMP
COMMON IF T2
FS-A
FS-B
FS-C
BALANCED MODULATOR T1
BALANCED MODULATOR
1/2 6EA8 V1A
6EA8 V1B
MICROPHONE AMP
AF CATHODE FOLLOWER
1/2 6EA8 V2A XMTR IF AMP
FUNCTION SWITCH (REAR VIEW)
L&T DETAIL BOTTOM VIEW
CRYSTAL CALIBRATOR SOCKET (OCTAL)

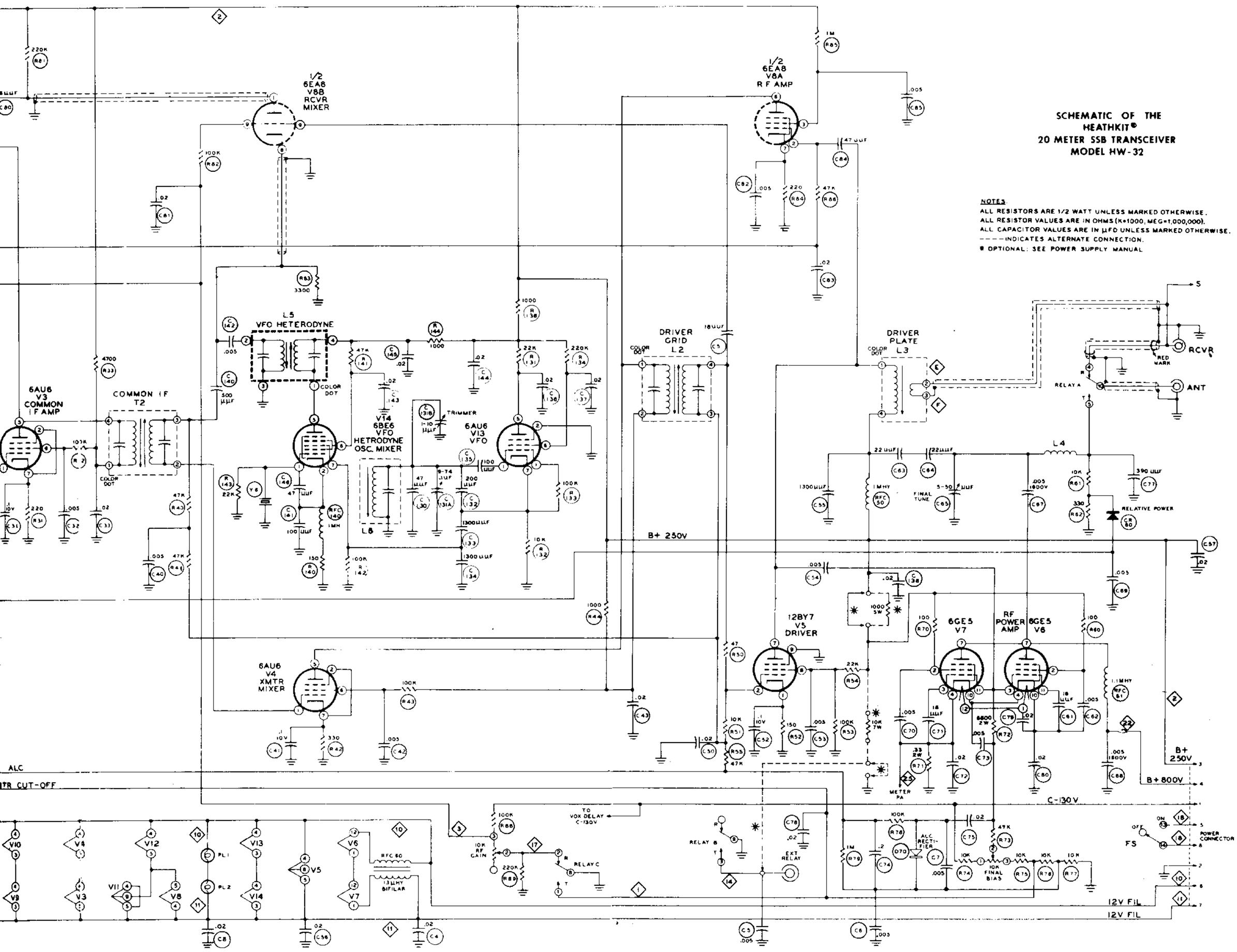

SCHEMATIC OF THE HEATHKIT® 20 METER SSB TRANSCEIVER MODEL HW-32

NOTES:
ALL RESISTORS ARE 1/2 WATT UNLESS MARKED OTHERWISE.
ALL RESISTOR VALUES ARE IN OHMS (K=1000, MEG=1,000,000).
ALL CAPACITOR VALUES ARE IN µFD UNLESS MARKED OTHERWISE.
- - - - INDICATES ALTERNATE CONNECTION.
* OPTIONAL: SEE POWER SUPPLY MANUAL