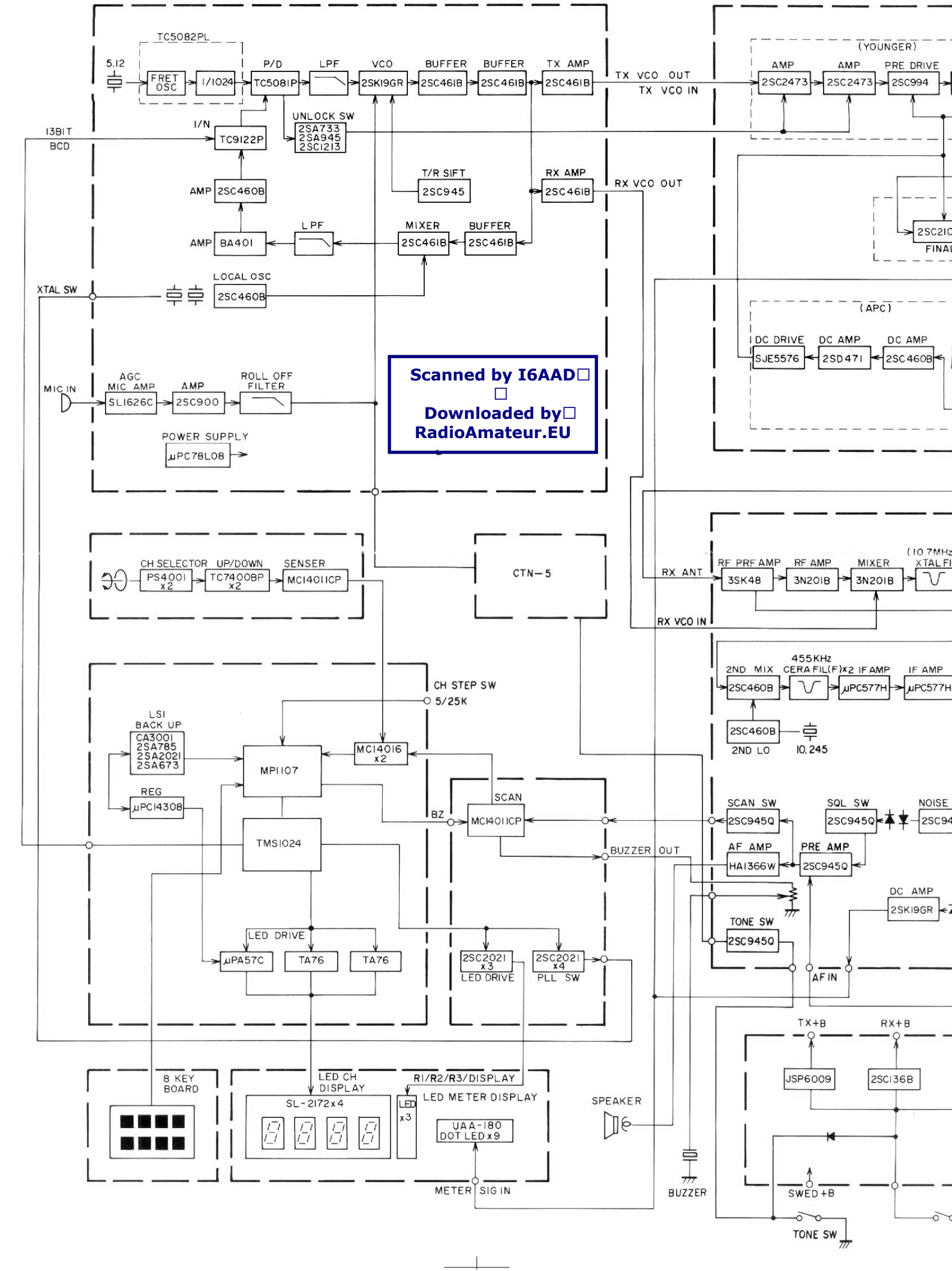
TC5082PL
5.12
FRET OSC
1/1024
P/D
TC5081P
LPF
VCO
2SK19GR
BUFFER
2SC461B
BUFFER
2SC461B
TX AMP
2SC461B
TX VCO OUT
TX VCO IN
(YOUNGER)
AMP
2SC2473
AMP
2SC2473
PRE DRIVE
2SC994
13BIT BCD
I/N
TC9122P
UNLOCK SW
2SA733
2SA945
2SC1213
T/R SIFT
2SC945
RX AMP
2SC461B
RX VCO OUT
AMP
2SC460B
LPF
MIXER
2SC461B
BUFFER
2SC461B
AMP
BA401
LOCAL OSC
2SC460B
XTAL SW
(APC)
DC DRIVE
SJE5576
DC AMP
2SD471
DC AMP
2SC460B
MIC IN
AGC MIC AMP
SLI626C
AMP
2SC900
ROLL OFF FILTER
POWER SUPPLY
μPC78L08
Scanned by I6AAD
Downloaded by
RadioAmateur.EU
CH SELECTOR UP/DOWN
PS4001 x2
TC7400BP x2
SENSER
MCI4011CP
CTN-5
RX ANT
RF PRE AMP
3SK48
RF AMP
3N201B
MIXER
3N201B
RX VCO IN
455KHz
2ND MIX
2SC460B
CERA FIL(F)x2 IF AMP
μPC577H
IF AMP
μPC577H
2SC460B
2ND LO
10.245
CH STEP SW
5/25K
LSI BACK UP
CA3001
2SA785
2SA2021
2SA673
MPI1107
MCI4016 x2
REG
μPC14308
SCAN
BZ
MCI4011CP
SCAN SW
2SC945Q
SQL SW
2SC945Q
NOISE
2SC94
TMS1024
BUZZER OUT
AF AMP
HA1366W
PRE AMP
2SC945Q
DC AMP
2SK19GR
TONE SW
2SC945Q
LED DRIVE
μPA57C
TA76
TA76
2SC2021 x3
LED DRIVE
2SC2021 x4
PLL SW
AF IN
TX+B
RX+B
JSP6009
2SC136B
8 KEY BOARD
LED CH DISPLAY
SL-2172x4
R1/R2/R3/DISPLAY
LED x3
LED METER DISPLAY
UAA-180 DOT LED x9
METER SIG IN
SPEAKER
BUZZER
SWED+B
TONE SW

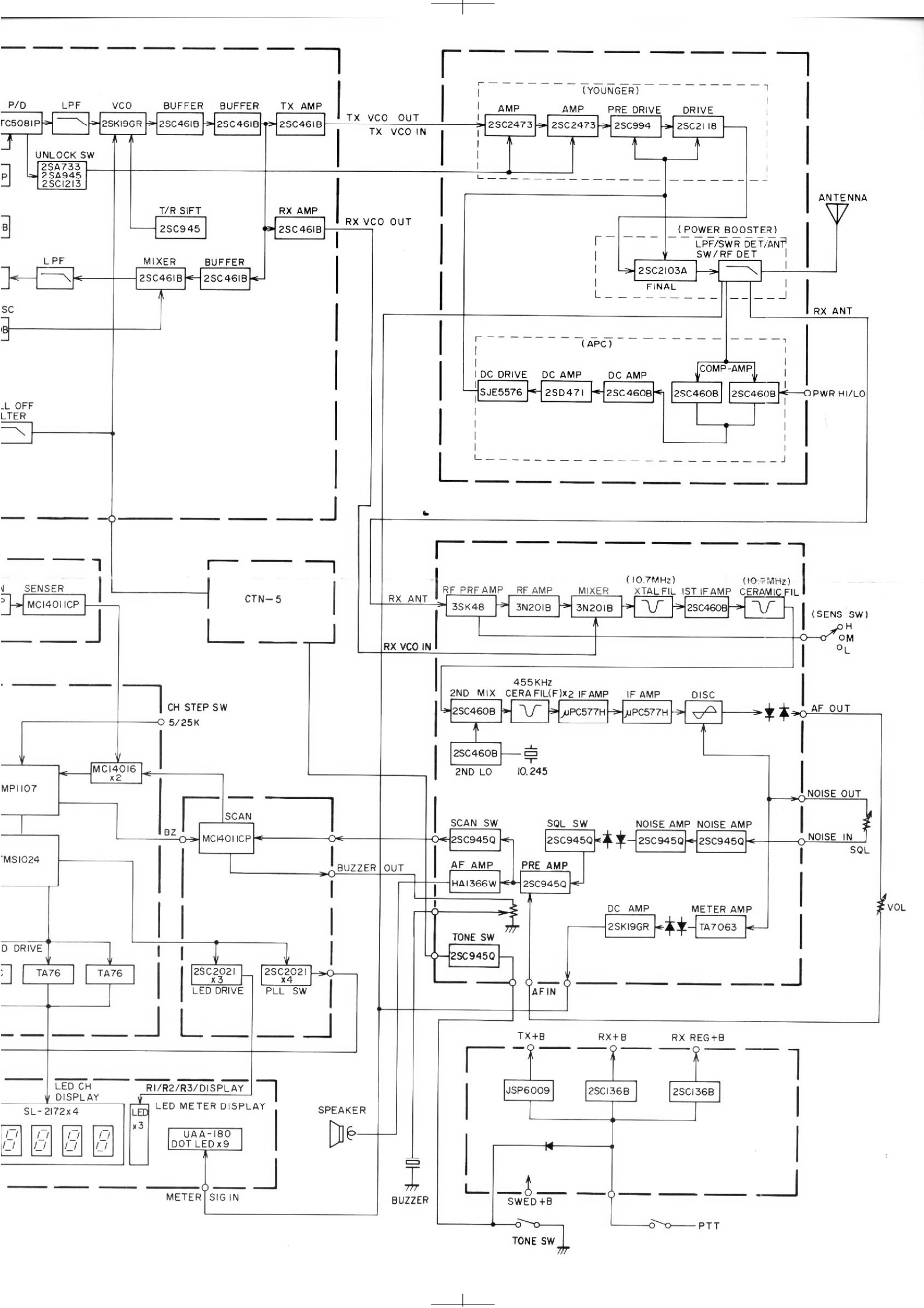
P/D
LPF
VCO
2SK19GR
BUFFER
2SC461B
BUFFER
2SC461B
TX AMP
2SC461B
TX VCO OUT
TX VCO IN
UNLOCK SW
2SA733
2SA945
2SC1213
T/R SIFT
2SC945
RX AMP
2SC461B
RX VCO OUT
LPF
MIXER
2SC461B
BUFFER
2SC461B
(YOUNGER)
AMP
2SC2473
AMP
2SC2473
PRE DRIVE
2SC994
DRIVE
2SC2118
ANTENNA
(POWER BOOSTER)
LPF/SWR DET/ANT SW/RF DET
2SC2103A
FINAL
RX ANT
(APC)
DC DRIVE
SJE5576
DC AMP
2SD471
DC AMP
2SC460B
COMP-AMP
2SC460B
2SC460B
PWR HI/LO
SENSER
MC14011CP
CTN-5
RX ANT
RF PRE AMP
3SK48
RF AMP
3N201B
MIXER
3N201B
(10.7MHz)
XTAL FIL
1ST IF AMP
2SC460B
(10.7MHz)
CERAMIC FIL
(SENS SW)
H
M
L
RX VCO IN
CH STEP SW
5/25K
MC14016
x2
2ND MIX
2SC460B
455KHz
CERA FIL(F)x2 IF AMP
μPC577H
IF AMP
μPC577H
DISC
AF OUT
2SC460B
2ND LO
10.245
NOISE OUT
NOISE IN
SQL
SCAN
BZ
MC14011CP
SCAN SW
2SC945Q
SQL SW
2SC945Q
NOISE AMP
2SC945Q
NOISE AMP
2SC945Q
BUZZER OUT
AF AMP
HA1366W
PRE AMP
2SC945Q
VOL
DC AMP
2SK19GR
METER AMP
TA7063
TONE SW
2SC945Q
TA76
TA76
2SC2021
x3
LED DRIVE
2SC2021
x4
PLL SW
AF IN
TX+B
RX+B
RX REG+B
JSP6009
2SC136B
2SC136B
LED CH
DISPLAY
SL-2172x4
R1/R2/R3/DISPLAY
LED METER DISPLAY
LED
x3
UAA-180
DOT LED x9
METER SIG IN
SPEAKER
BUZZER
SWED+B
PTT
TONE SW

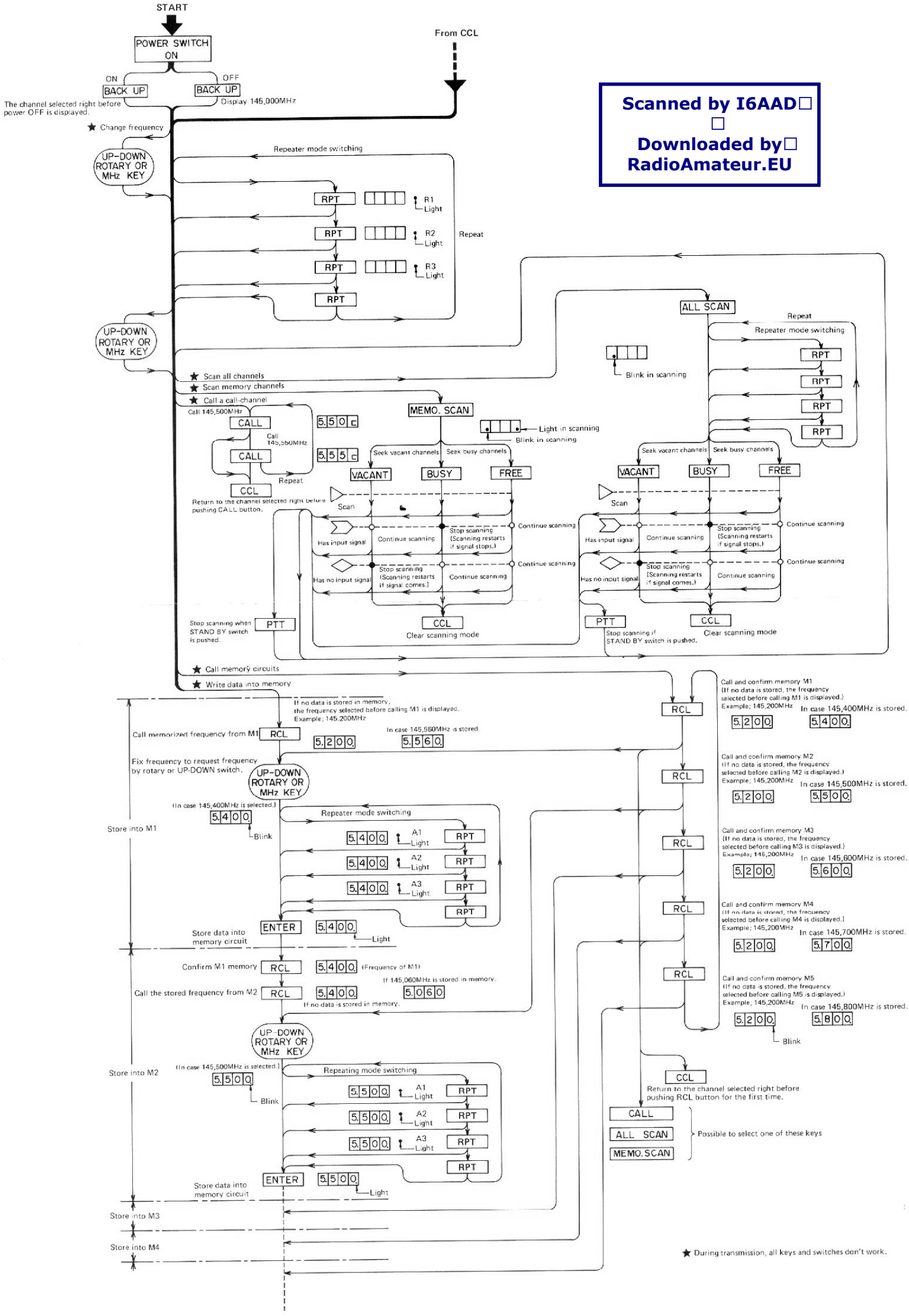

Scanned by I6AAD
Downloaded by
RadioAmateur.EU

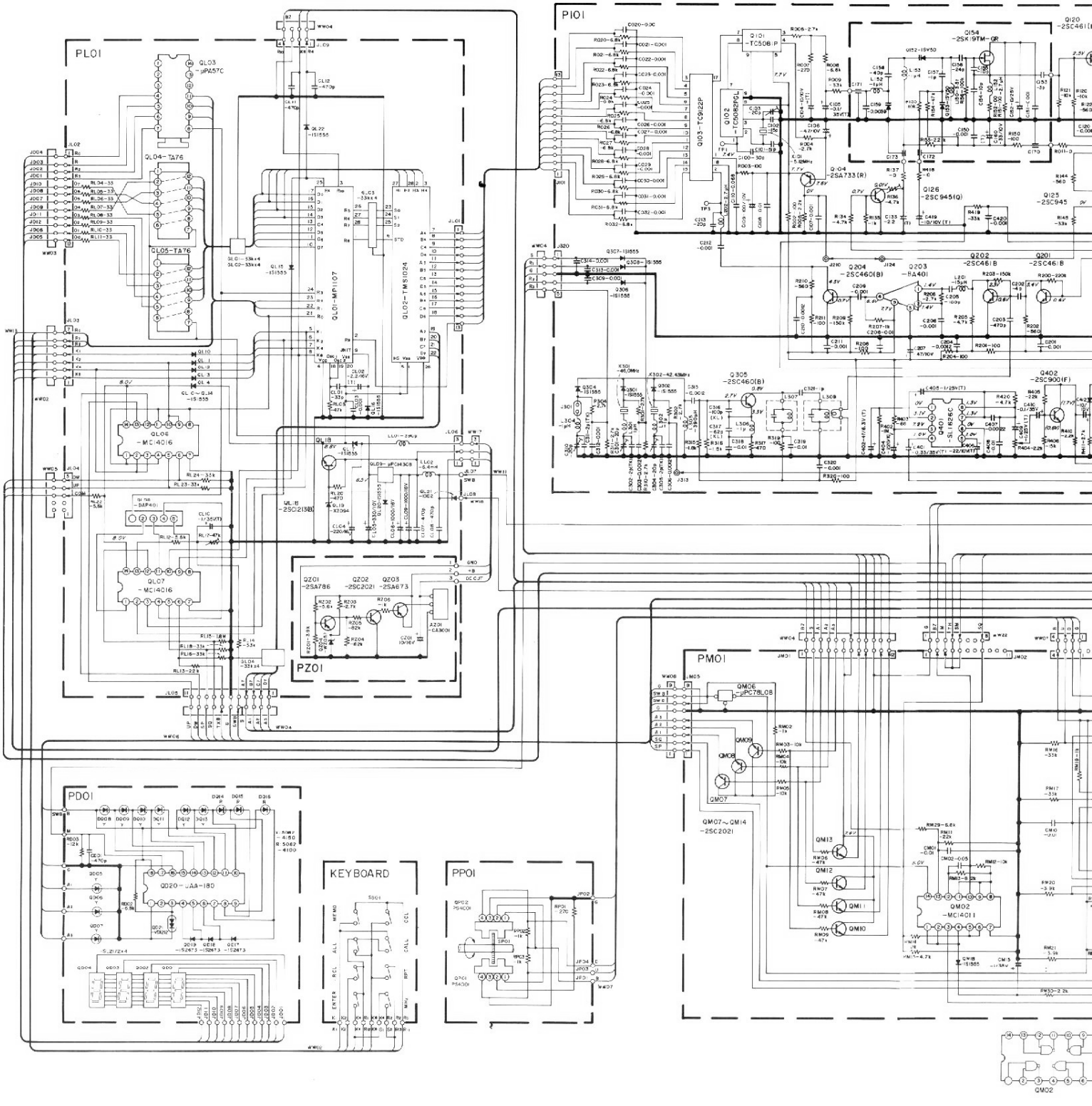
PL01
PI01
PZ01
PM01
PD01
KEYBOARD
PP01
QL03 -μPA57C
QL04-TA76
QL05-TA76
QL01-MP1107
QL02-TMS1024
QL06 -MC14016
QL07 -MC14016
QL18 -2SC1213(B)
QZ01 -2SA786
QZ02 -2SC2021
QZ03 -2SA673
Q101 -TC5081P
Q102 -TC5082PCL
Q103-TC9122P
Q104 -2SA733(R)
Q126 -2SC945(Q)
Q125 -2SC945
Q154 -2SK19TM-GR
Q120 -2SC461(I)
Q204 -2SC460(B)
Q203 -BA401
Q202 -2SC461B
Q201 -2SC461B
Q305 -2SC460(B)
Q402 -2SC900(F)
Q401 -SL1626C
QM06 -μPC78L08
QM07~QM14 -2SC2021
QM02 -MC14011
QD20-UAA-180
QM02

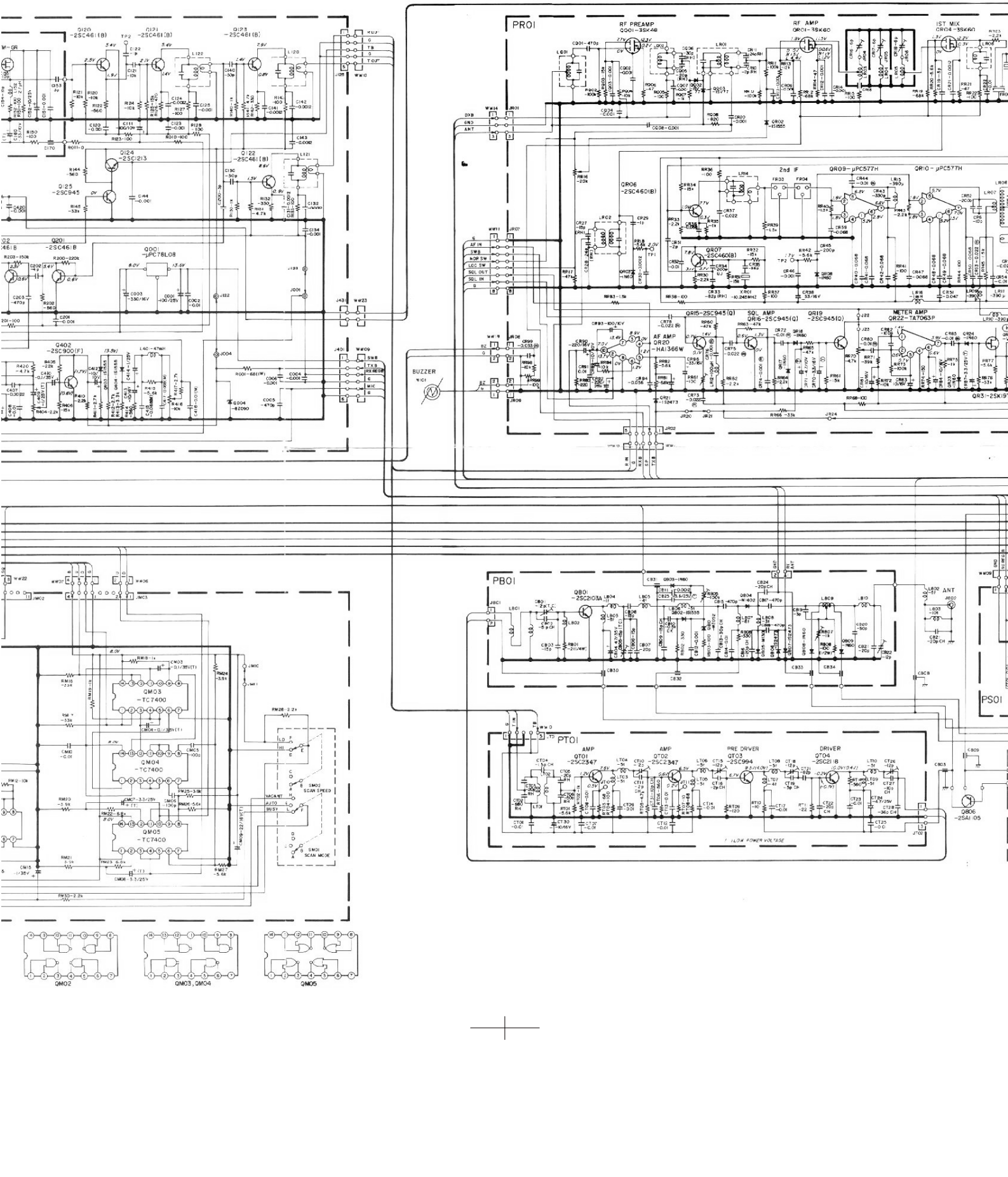
PR01
RF PREAMP
Q001-3SK48
RF AMP
QR01-3SK60
1ST MIX
QR04-3SK60
2nd IF
QR09-μPC577H
QR10-μPC577H
QR06
-2SC460(B)
QR07
-2SC460(B)
QR15-2SC945(Q)
SQL AMP
QR16-2SC945(Q)
QR19
-2SC945(Q)
METER AMP
QR22-TA7063P
AF AMP
QR20
-HA1366W
BUZZER
Q120
-2SC461(B)
Q121
-2SC461(B)
Q123
-2SC461(B)
Q124
-2SC1213
Q125
-2SC945
Q122
-2SC461(B)
Q201
-2SC461(B)
Q001
-μPC78L08
Q402
-2SC900(F)
PB01
Q801
-2SC2103A
PT01
AMP
QT01
-2SC2347
AMP
QT02
-2SC2347
PRE DRIVER
QT03
-2SC994
DRIVER
QT04
-2SC2218
PS01
Q806
-2SA1015
QM03
-TC7400
QM04
-TC7400
QM05
-TC7400
SCAN SPEED
SCAN MODE
VACANT
AUTO
BUSY
QM02
QM03, QM04
QM05

Scanned by I6AAD
Downloaded by
RadioAmateur.EU

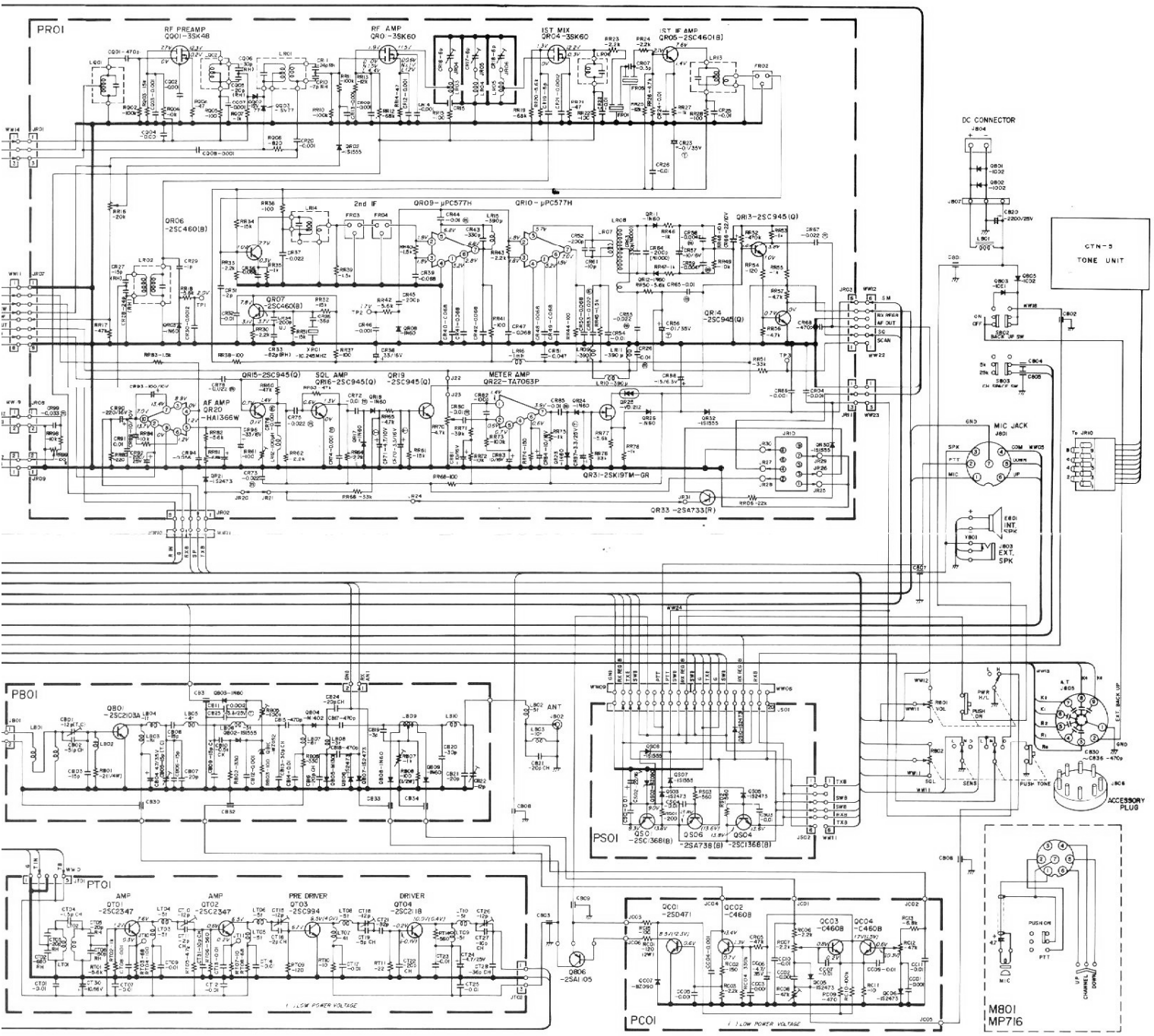

STANDARD®

SCHE

SCHEMATIC DIAGRAM FOR MODEL C8800

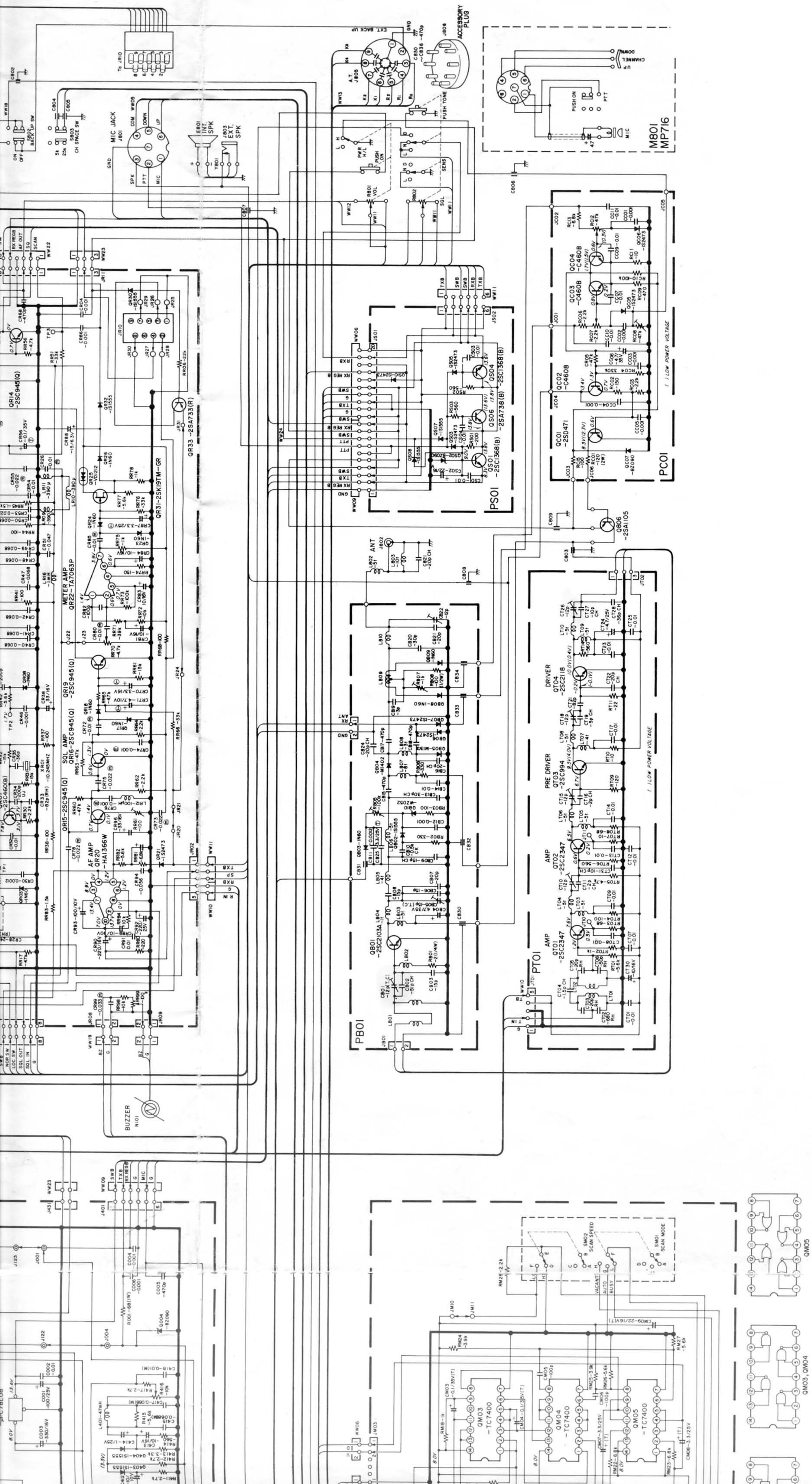

ACCESSORY PLUG
EXT. BACK UP
MIC JACK
M801
MP716
PS01
PC01
PB01
PT01
METER AMP
QR22-TA7063P
SQL AMP
QR16-2SC945(Q)
AF AMP
QR20
-HA1366W
QR31-2SK19TM-GR
QR33 -2SA733(R)
QR14
-2SC945(Q)
QR19
-2SC945(Q)
QR15-2SC945(Q)
QB01
-2SC2103A
QS01
-2SC1368(B)
QS06
-2SA738(B)
QS04
-2SC1368(B)
QC01
-2SD471
QC02
-C460B
QC03
-C460B
QC04
-C460B
QB06
-2SA1105
DRIVER
QT04
-2SC2118
PRE DRIVER
QT03
-2SC994
AMP
QT02
-2SC2347
AMP
QT01
-2SC2347
BUZZER
N101
QM03
-TC7400
QM04
-TC7400
QM05
-TC7400
QM05
QM03, QM04
SM02
SCAN SPEED
SM01
SCAN MODE
VACANT
AUTO
BUSY
( ) LOW POWER VOLTAGE

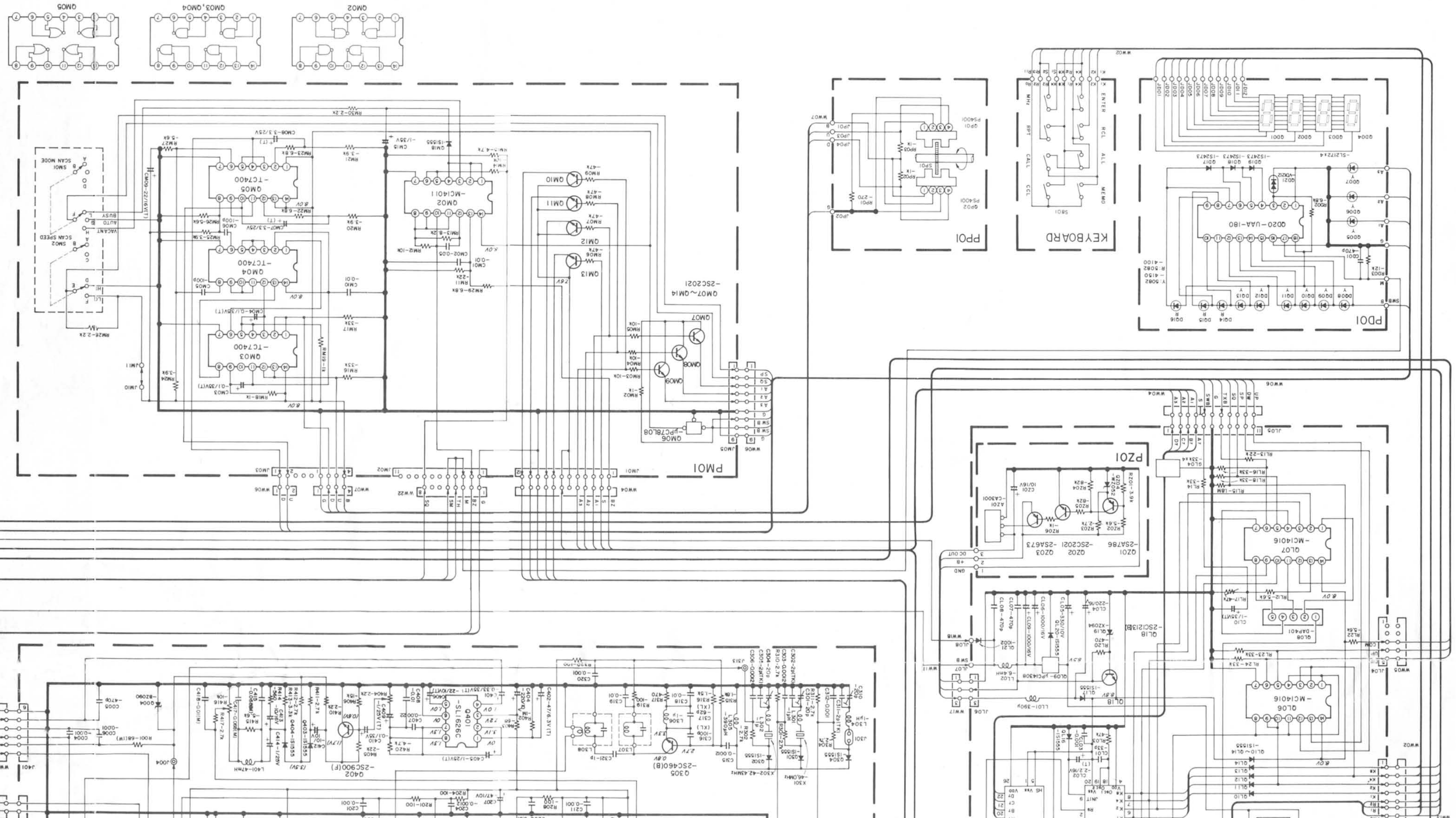
PM01
PP01
KEYBOARD
PD01
PZ01
BUZZER
SW01
SW02
SW03
SW04
SW05
SW06
SW07
SW08
SW09
SW10
SW11
SW12
SW13
SW14
SW15
SW16
SW17
SW18
SW19
SW20
SW21
SW22
SW23
SW24
SW25
SW26
SW27
SW28
SW29
SW30
SW31
SW32
SW33
SW34
SW35
SW36
SW37
SW38
SW39
SW40
SW41
SW42
SW43
SW44
SW45
SW46
SW47
SW48
SW49
SW50
SW51
SW52
SW53
SW54
SW55
SW56
SW57
SW58
SW59
SW60
SW61
SW62
SW63
SW64
SW65
SW66
SW67
SW68
SW69
SW70
SW71
SW72
SW73
SW74
SW75
SW76
SW77
SW78
SW79
SW80
SW81
SW82
SW83
SW84
SW85
SW86
SW87
SW88
SW89
SW90
SW91
SW92
SW93
SW94
SW95
SW96
SW97
SW98
SW99
SW100
SW101
SW102
SW103
SW104
SW105
SW106
SW107
SW108
SW109
SW110
SW111
SW112
SW113
SW114
SW115
SW116
SW117
SW118
SW119
SW120
SW121
SW122
SW123
SW124
SW125
SW126
SW127
SW128
SW129
SW130
SW131
SW132
SW133
SW134
SW135
SW136
SW137
SW138
SW139
SW140
SW141
SW142
SW143
SW144
SW145
SW146
SW147
SW148
SW149
SW150
SW151
SW152
SW153
SW154
SW155
SW156
SW157
SW158
SW159
SW160
SW161
SW162
SW163
SW164
SW165
SW166
SW167
SW168
SW169
SW170
SW171
SW172
SW173
SW174
SW175
SW176
SW177
SW178
SW179
SW180
SW181
SW182
SW183
SW184
SW185
SW186
SW187
SW188
SW189
SW190
SW191
SW192
SW193
SW194
SW195
SW196
SW197
SW198
SW199
SW200
SW201
SW202
SW203
SW204
SW205
SW206
SW207
SW208
SW209
SW210
SW211
SW212
SW213
SW214
SW215
SW216
SW217
SW218
SW219
SW220
SW221
SW222
SW223
SW224
SW225
SW226
SW227
SW228
SW229
SW230
SW231
SW232
SW233
SW234
SW235
SW236
SW237
SW238
SW239
SW240
SW241
SW242
SW243
SW244
SW245
SW246
SW247
SW248
SW249
SW250
SW251
SW252
SW253
SW254
SW255
SW256
SW257
SW258
SW259
SW260
SW261
SW262
SW263
SW264
SW265
SW266
SW267
SW268
SW269
SW270
SW271
SW272
SW273
SW274
SW275
SW276
SW277
SW278
SW279
SW280
SW281
SW282
SW283
SW284
SW285
SW286
SW287
SW288
SW289
SW290
SW291
SW292
SW293
SW294
SW295
SW296
SW297
SW298
SW299
SW300
SW301
SW302
SW303
SW304
SW305
SW306
SW307
SW308
SW309
SW310
SW311
SW312
SW313
SW314
SW315
SW316
SW317
SW318
SW319
SW320
SW321
SW322
SW323
SW324
SW325
SW326
SW327
SW328
SW329
SW330
SW331
SW332
SW333
SW334
SW335
SW336
SW337
SW338
SW339
SW340
SW341
SW342
SW343
SW344
SW345
SW346
SW347
SW348
SW349
SW350
SW351
SW352
SW353
SW354
SW355
SW356
SW357
SW358
SW359
SW360
SW361
SW362
SW363
SW364
SW365
SW366
SW367
SW368
SW369
SW370
SW371
SW372
SW373
SW374
SW375
SW376
SW377
SW378
SW379
SW380
SW381
SW382
SW383
SW384
SW385
SW386
SW387
SW388
SW389
SW390
SW391
SW392
SW393
SW394
SW395
SW396
SW397
SW398
SW399
SW400
SW401
SW402
SW403
SW404
SW405
SW406
SW407
SW408
SW409
SW410
SW411
SW412
SW413
SW414
SW415
SW416
SW417
SW418
SW419
SW420
SW421
SW422
SW423
SW424
SW425
SW426
SW427
SW428
SW429
SW430
SW431
SW432
SW433
SW434
SW435
SW436
SW437
SW438
SW439
SW440
SW441
SW442
SW443
SW444
SW445
SW446
SW447
SW448
SW449
SW450
SW451
SW452
SW453
SW454
SW455
SW456
SW457
SW458
SW459
SW460
SW461
SW462
SW463
SW464
SW465
SW466
SW467
SW468
SW469
SW470
SW471
SW472
SW473
SW474
SW475
SW476
SW477
SW478
SW479
SW480
SW481
SW482
SW483
SW484
SW485
SW486
SW487
SW488
SW489
SW490
SW491
SW492
SW493
SW494
SW495
SW496
SW497
SW498
SW499
SW500
SW501
SW502
SW503
SW504
SW505
SW506
SW507
SW508
SW509
SW510
SW511
SW512
SW513
SW514
SW515
SW516
SW517
SW518
SW519
SW520
SW521
SW522
SW523
SW524
SW525
SW526
SW527
SW528
SW529
SW530
SW531
SW532
SW533
SW534
SW535
SW536
SW537
SW538
SW539
SW540
SW541
SW542
SW543
SW544
SW545
SW546
SW547
SW548
SW549
SW550
SW551
SW552
SW553
SW554
SW555
SW556
SW557
SW558
SW559
SW560
SW561
SW562
SW563
SW564
SW565
SW566
SW567
SW568
SW569
SW570
SW571
SW572
SW573
SW574
SW575
SW576
SW577
SW578
SW579
SW580
SW581
SW582
SW583
SW584
SW585
SW586
SW587
SW588
SW589
SW590
SW591
SW592
SW593
SW594
SW595
SW596
SW597
SW598
SW599
SW600
SW601
SW602
SW603
SW604
SW605
SW606
SW607
SW608
SW609
SW610
SW611
SW612
SW613
SW614
SW615
SW616
SW617
SW618
SW619
SW620
SW621
SW622
SW623
SW624
SW625
SW626
SW627
SW628
SW629
SW630
SW631
SW632
SW633
SW634
SW635
SW636
SW637
SW638
SW639
SW640
SW641
SW642
SW643
SW644
SW645
SW646
SW647
SW648
SW649
SW650
SW651
SW652
SW653
SW654
SW655
SW656
SW657
SW658
SW659
SW660
SW661
SW662
SW663
SW664
SW665
SW666
SW667
SW668
SW669
SW670
SW671
SW672
SW673
SW674
SW675
SW676
SW677
SW678
SW679
SW680
SW681
SW682
SW683
SW684
SW685
SW686
SW687
SW688
SW689
SW690
SW691
SW692
SW693
SW694
SW695
SW696
SW697
SW698
SW699
SW700
SW701
SW702
SW703
SW704
SW705
SW706
SW707
SW708
SW709
SW710
SW711
SW712
SW713
SW714
SW715
SW716
SW717
SW718
SW719
SW720
SW721
SW722
SW723
SW724
SW725
SW726
SW727
SW728
SW729
SW730
SW731
SW732
SW733
SW734
SW735
SW736
SW737
SW738
SW739
SW740
SW741
SW742
SW743
SW744
SW745
SW746
SW747
SW748
SW749
SW750
SW751
SW752
SW753
SW754
SW755
SW756
SW757
SW758
SW759
SW760
SW761
SW762
SW763
SW764
SW765
SW766
SW767
SW768
SW769
SW770
SW771
SW772
SW773
SW774
SW775
SW776
SW777
SW778
SW779
SW780
SW781
SW782
SW783
SW784
SW785
SW786
SW787
SW788
SW789
SW790
SW791
SW792
SW793
SW794
SW795
SW796
SW797
SW798
SW799
SW800
SW801
SW802
SW803
SW804
SW805
SW806
SW807
SW808
SW809
SW810
SW811
SW812
SW813
SW814
SW815
SW816
SW817
SW818
SW819
SW820
SW821
SW822
SW823
SW824
SW825
SW826
SW827
SW828
SW829
SW830
SW831
SW832
SW833
SW834
SW835
SW836
SW837
SW838
SW839
SW840
SW841
SW842
SW843
SW844
SW845
SW846
SW847
SW848
SW849
SW850
SW851
SW852
SW853
SW854
SW855
SW856
SW857
SW858
SW859
SW860
SW861
SW862
SW863
SW864
SW865
SW866
SW867
SW868
SW869
SW870
SW871
SW872
SW873
SW874
SW875
SW876
SW877
SW878
SW879
SW880
SW881
SW882
SW883
SW884
SW885
SW886
SW887
SW888
SW889
SW890
SW891
SW892
SW893
SW894
SW895
SW896
SW897
SW898
SW899
SW900
SW901
SW902
SW903
SW904
SW905
SW906
SW907
SW908
SW909
SW910
SW911
SW912
SW913
SW914
SW915
SW916
SW917
SW918
SW919
SW920
SW921
SW922
SW923
SW924
SW925
SW926
SW927
SW928
SW929
SW930
SW931
SW932
SW933
SW934
SW935
SW936
SW937
SW938
SW939
SW940
SW941
SW942
SW943
SW944
SW945
SW946
SW947
SW948
SW949
SW950
SW951
SW952
SW953
SW954
SW955
SW956
SW957
SW958
SW959
SW960
SW961
SW962
SW963
SW964
SW965
SW966
SW967
SW968
SW969
SW970
SW971
SW972
SW973
SW974
SW975
SW976
SW977
SW978
SW979
SW980
SW981
SW982
SW983
SW984
SW985
SW986
SW987
SW988
SW989
SW990
SW991
SW992
SW993
SW994
SW995
SW996
SW997
SW998
SW999
SW1000

BLOCK DIAGRAM

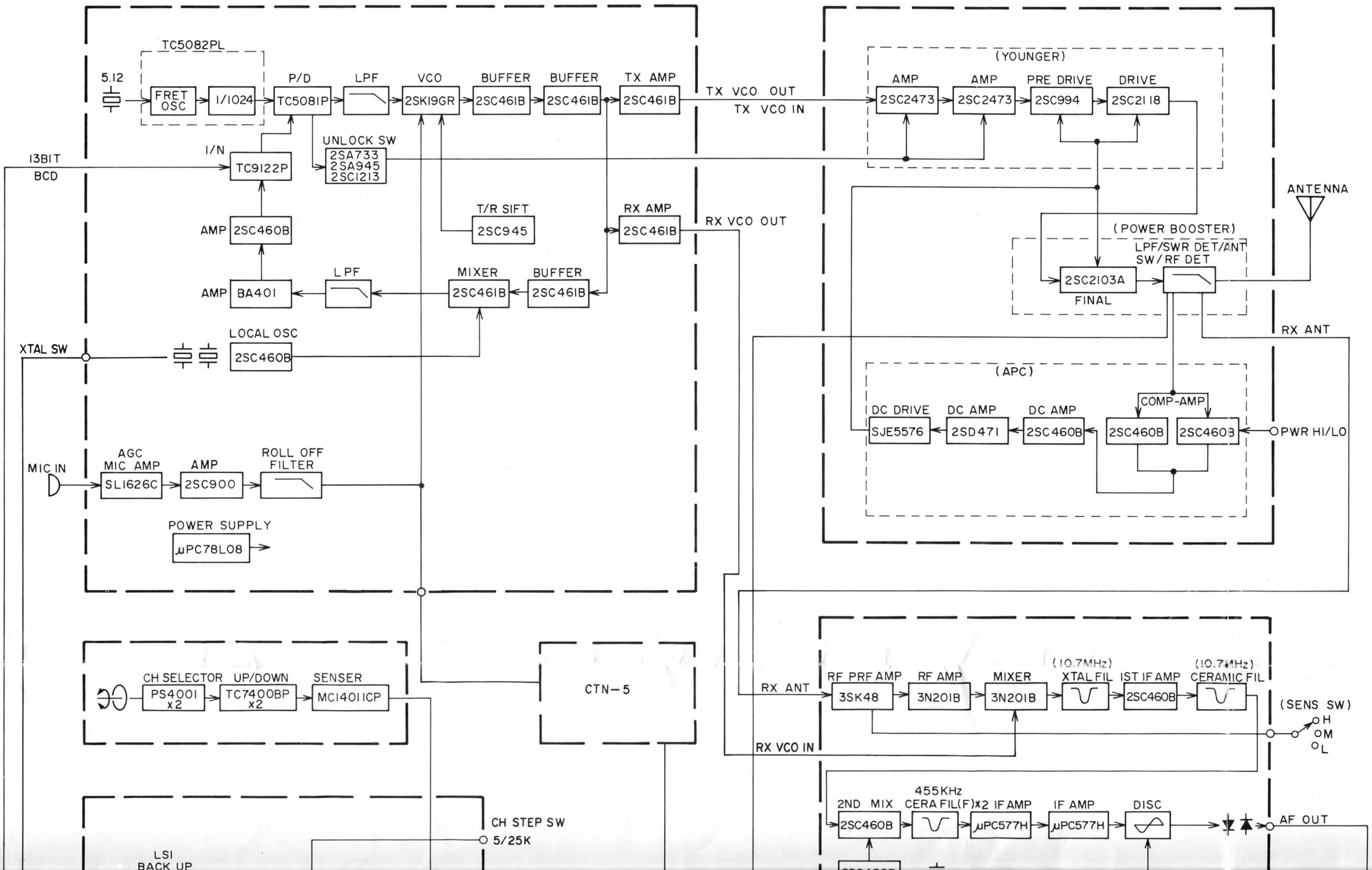

FLOW CHART

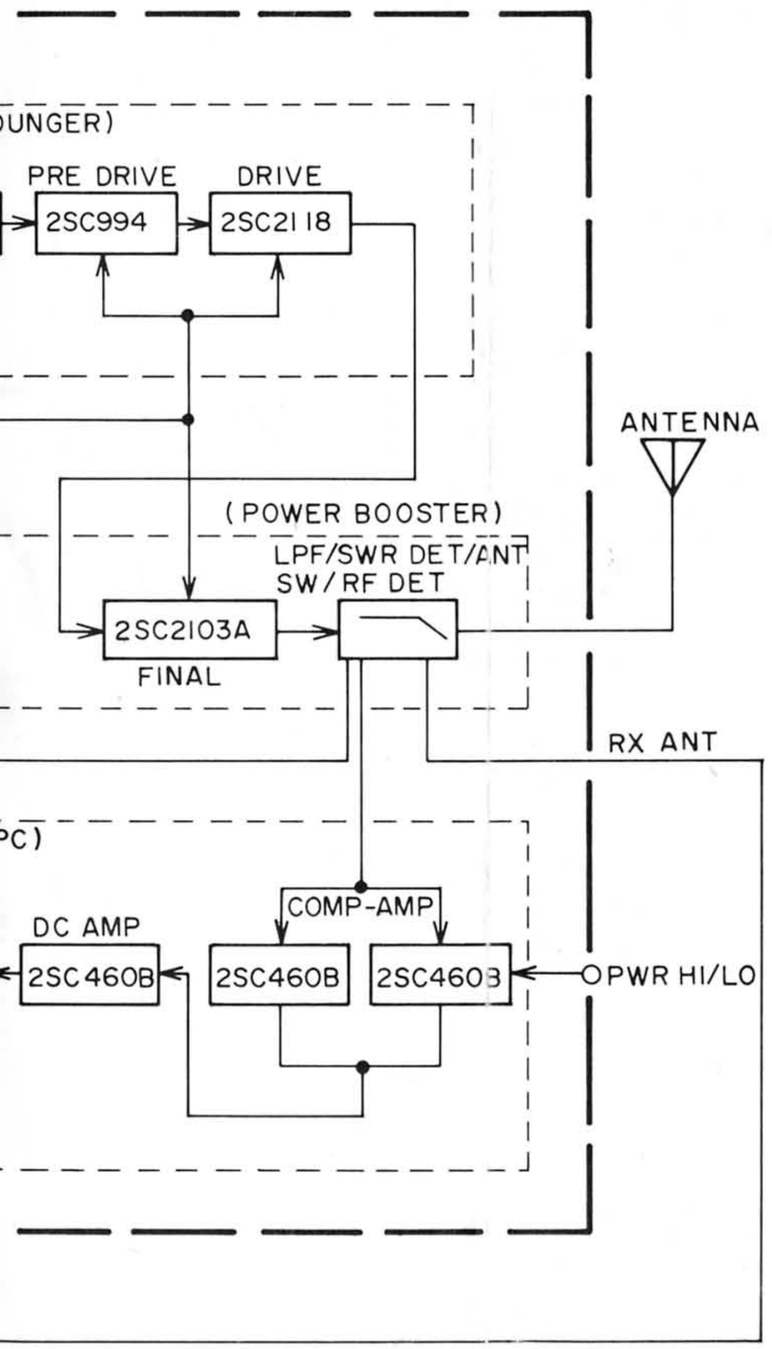
DUNGER)
PRE DRIVE
DRIVE
2SC994
2SC2118
ANTENNA
(POWER BOOSTER)
LPF/SWR DET/ANT
SW/RF DET
2SC2103A
FINAL
RX ANT
PC)
COMP-AMP
DC AMP
2SC460B
2SC460B
2SC460B
PWR HI/LO
(10.7MHz)
(10.7MHz)
ER
01B
XTAL FIL
IST IF AMP
2SC460B
CERAMIC FIL
(SENS SW)
H
M
L
MP
IF AMP
DISC
AF OUT

START
POWER SWITCH ON
From CCL
ON
OFF
BACK UP
BACK UP
The channel selected right before power OFF is displayed.
Display 145,000MHz
★ Change frequency
UP-DOWN ROTARY OR MHz KEY
Repeater mode switching
RPT
R1 Light
RPT
R2 Light
RPT
R3 Light
RPT
Repeat
UP-DOWN ROTARY OR MHz KEY
ALL SCAN
Repeat
Repeater mode switching
RPT
RPT
RPT
RPT
Blink in scanning
★ Scan all channels
★ Scan memory channels
★ Call a call-channel
Call 145,500MHz
CALL
5.5.0.
Call 145,550MHz
CALL
5.5.5.
Repeat
CCL
Return to the channel selected right before pushing CALL button.
MEMO. SCAN
Light in scanning
Blink in scanning
Seek vacant channels
Seek busy channels
VACANT
BUSY
FREE
Scan
Has input signal
Continue scanning
Stop scanning (Scanning restarts if signal stops.)
Continue scanning
Has no input signal
Stop scanning (Scanning restarts if signal comes.)
Continue scanning
Stop scanning when STAND BY switch is pushed.
PTT
CCL
Clear scanning mode
Seek vacant channels
Seek busy channels
VACANT
BUSY
FREE
Scan
Has input signal
Continue scanning
Stop scanning (Scanning restarts if signal stops.)
Continue scanning
Has no input signal
Stop scanning (Scanning restarts if signal comes.)
Continue scanning
PTT
Stop scanning if STAND BY switch is pushed.
CCL
Clear scanning mode
★ Call memory circuits
★ Write data into memory
If no data is stored in memory, the frequency selected before calling M1 is displayed.
Example; 145,200MHz
Call memorized frequency from M1
RCL
5.2.0.0.
In case 145,560MHz is stored.
5.5.6.0.
RCL
Call and confirm memory M1
(If no data is stored, the frequency selected before calling M1 is displayed.)
Example; 145,200MHz
5.2.0.0.
In case 145,400MHz is stored.
5.4.0.0.

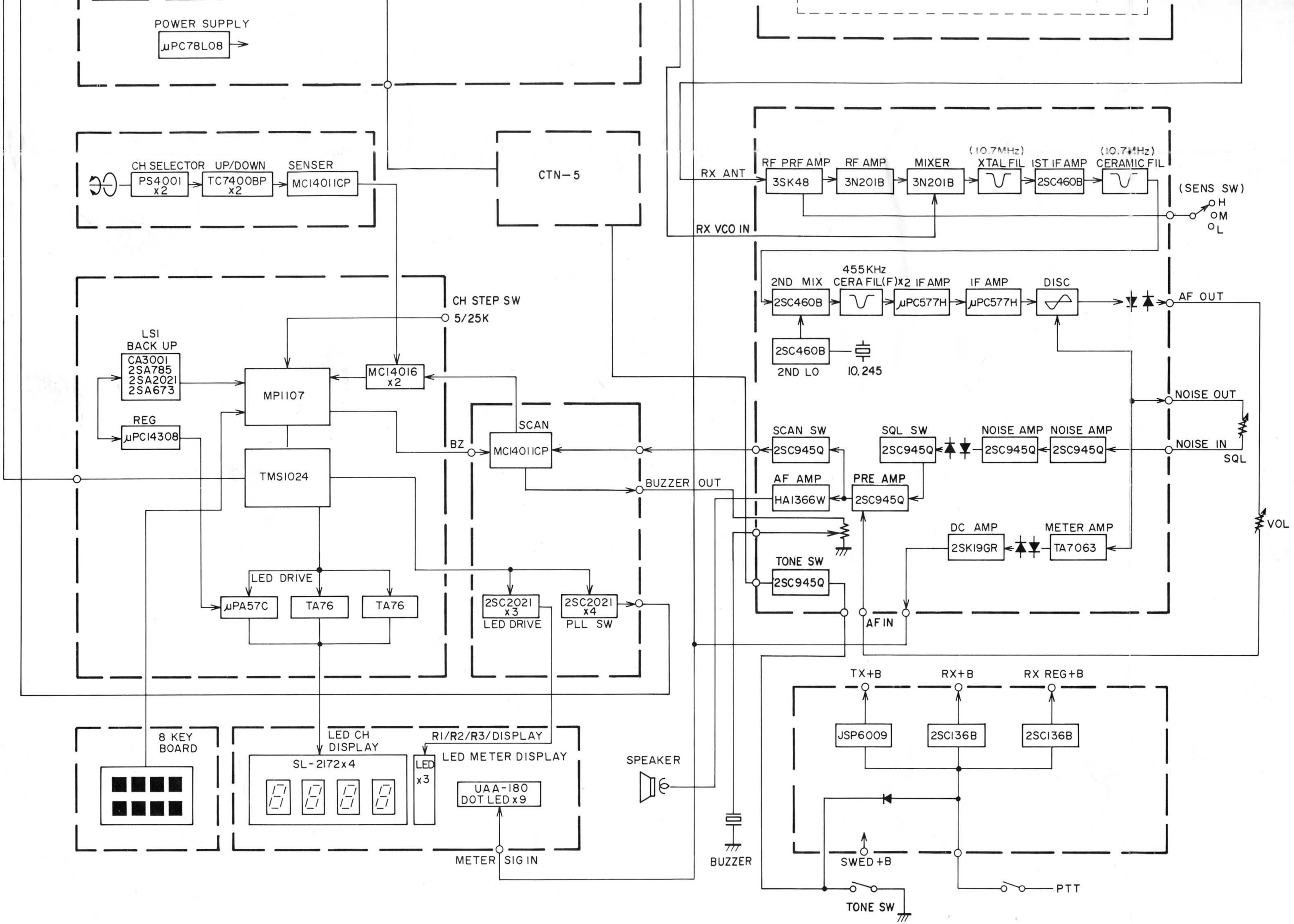
POWER SUPPLY
μPC78L08
CH SELECTOR
PS4001 x2
UP/DOWN
TC7400BP x2
SENSER
MC14011CP
CTN-5
RX ANT
RF PRF AMP
3SK48
RF AMP
3N201B
MIXER
3N201B
(10.7MHz)
XTAL FIL
IST IF AMP
2SC460B
(10.7MHz)
CERAMIC FIL
(SENS SW)
H
M
L
RX VCO IN
455KHz
2ND MIX
2SC460B
CERA FIL(F)x2 IF AMP
μPC577H
IF AMP
μPC577H
DISC
AF OUT
2SC460B
2ND LO
10.245
CH STEP SW
5/25K
LSI
BACK UP
CA3001
2SA785
2SA2021
2SA673
MCI4016 x2
MPI107
REG
μPC14308
TMS1024
BZ
SCAN
MC14011CP
BUZZER OUT
NOISE OUT
SCAN SW
2SC945Q
SQL SW
2SC945Q
NOISE AMP
2SC945Q
NOISE AMP
2SC945Q
NOISE IN
SQL
AF AMP
HA1366W
PRE AMP
2SC945Q
VOL
DC AMP
2SK19GR
METER AMP
TA7063
TONE SW
2SC945Q
AF IN
LED DRIVE
μPA57C
TA76
TA76
2SC2021 x3
LED DRIVE
2SC2021 x4
PLL SW
TX+B
RX+B
RX REG+B
JSP6009
2SC136B
2SC136B
8 KEY
BOARD
LED CH
DISPLAY
SL-2172x4
LED x3
RI/R2/R3/DISPLAY
LED METER DISPLAY
UAA-180
DOT LED x9
METER SIG IN
SPEAKER
BUZZER
SWED +B
PTT
TONE SW

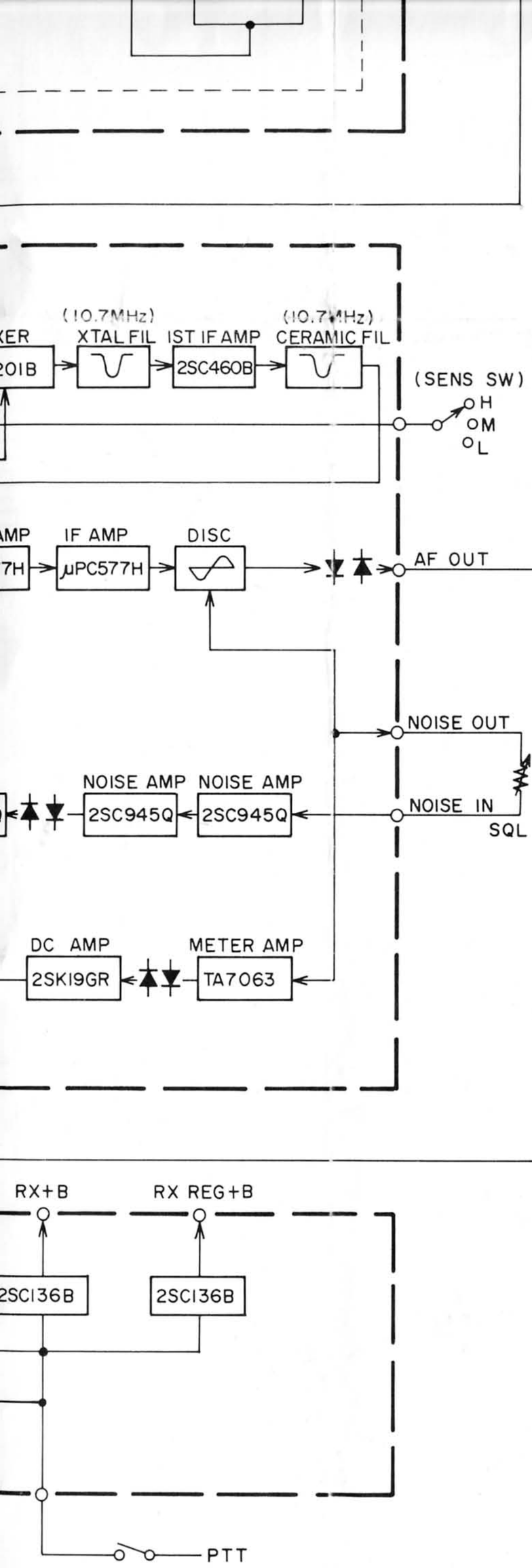
(10.7MHz)
XTAL FIL
IST IF AMP
2SC460B
(10.7MHz)
CERAMIC FIL
(SENS SW)
H
M
L
IF AMP
DISC
μPC577H
AF OUT
NOISE OUT
NOISE AMP
NOISE AMP
2SC945Q
2SC945Q
NOISE IN
SQL
VOL
DC AMP
METER AMP
2SK19GR
TA7063
RX+B
RX REG+B
2SC136B
2SC136B
PTT

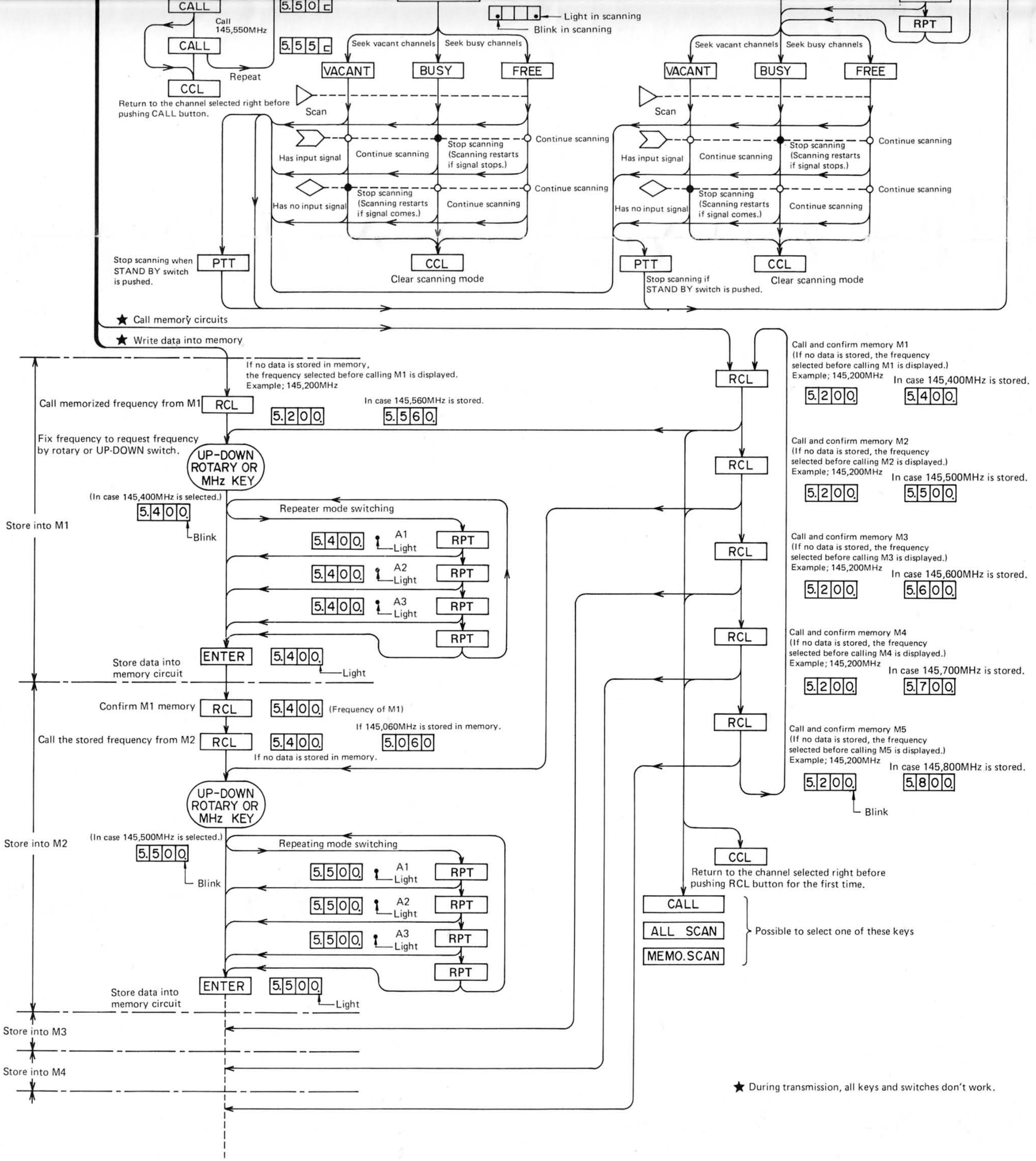
CALL
Call 145,550MHz
CALL
Repeat
CCL
Return to the channel selected right before pushing CALL button.
5.5.0.
5.5.5.
Light in scanning
Blink in scanning
Seek vacant channels
Seek busy channels
VACANT
BUSY
FREE
Scan
Has input signal
Continue scanning
Stop scanning (Scanning restarts if signal stops.)
Continue scanning
Has no input signal
Stop scanning (Scanning restarts if signal comes.)
Continue scanning
Stop scanning when STAND BY switch is pushed.
PTT
CCL
Clear scanning mode
RPT
Seek vacant channels
Seek busy channels
VACANT
BUSY
FREE
Scan
Has input signal
Continue scanning
Stop scanning (Scanning restarts if signal stops.)
Continue scanning
Has no input signal
Stop scanning (Scanning restarts if signal comes.)
Continue scanning
PTT
Stop scanning if STAND BY switch is pushed.
CCL
Clear scanning mode
★ Call memory circuits
★ Write data into memory
If no data is stored in memory, the frequency selected before calling M1 is displayed.
Example; 145,200MHz
Call memorized frequency from M1
RCL
5.2.0.0.
In case 145,560MHz is stored.
5.5.6.0.
Fix frequency to request frequency by rotary or UP-DOWN switch.
UP-DOWN ROTARY OR MHz KEY
(In case 145,400MHz is selected.)
5.4.0.0.
Blink
Store into M1
Repeater mode switching
5.4.0.0.
A1 Light
RPT
5.4.0.0.
A2 Light
RPT
5.4.0.0.
A3 Light
RPT
RPT
ENTER
5.4.0.0.
Light
Store data into memory circuit
Confirm M1 memory
RCL
5.4.0.0.
(Frequency of M1)
Call the stored frequency from M2
RCL
5.4.0.0.
If 145,060MHz is stored in memory.
5.0.6.0
If no data is stored in memory.
UP-DOWN ROTARY OR MHz KEY
Store into M2
(In case 145,500MHz is selected.)
5.5.0.0.
Blink
Repeating mode switching
5.5.0.0.
A1 Light
RPT
5.5.0.0.
A2 Light
RPT
5.5.0.0.
A3 Light
RPT
RPT
ENTER
5.5.0.0.
Light
Store data into memory circuit
Store into M3
Store into M4
RCL
Call and confirm memory M1
(If no data is stored, the frequency selected before calling M1 is displayed.)
Example; 145,200MHz
5.2.0.0.
In case 145,400MHz is stored.
5.4.0.0.
RCL
Call and confirm memory M2
(If no data is stored, the frequency selected before calling M2 is displayed.)
Example; 145,200MHz
5.2.0.0.
In case 145,500MHz is stored.
5.5.0.0.
RCL
Call and confirm memory M3
(If no data is stored, the frequency selected before calling M3 is displayed.)
Example; 145,200MHz
5.2.0.0.
In case 145,600MHz is stored.
5.6.0.0.
RCL
Call and confirm memory M4
(If no data is stored, the frequency selected before calling M4 is displayed.)
Example; 145,200MHz
5.2.0.0.
In case 145,700MHz is stored.
5.7.0.0.
RCL
Call and confirm memory M5
(If no data is stored, the frequency selected before calling M5 is displayed.)
Example; 145,200MHz
5.2.0.0.
Blink
In case 145,800MHz is stored.
5.8.0.0.
CCL
Return to the channel selected right before pushing RCL button for the first time.
CALL
ALL SCAN
MEMO.SCAN
Possible to select one of these keys
★ During transmission, all keys and switches don't work.