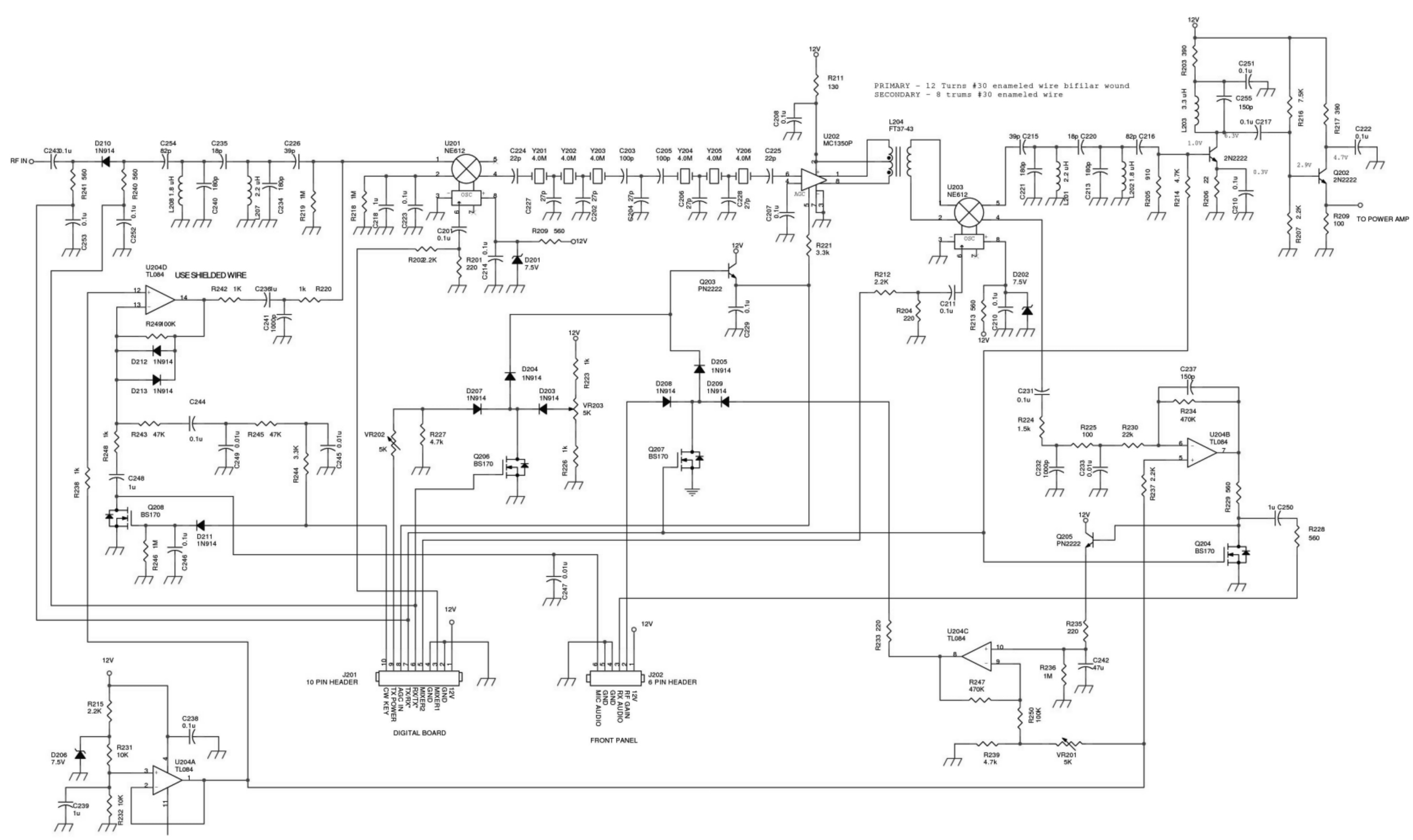

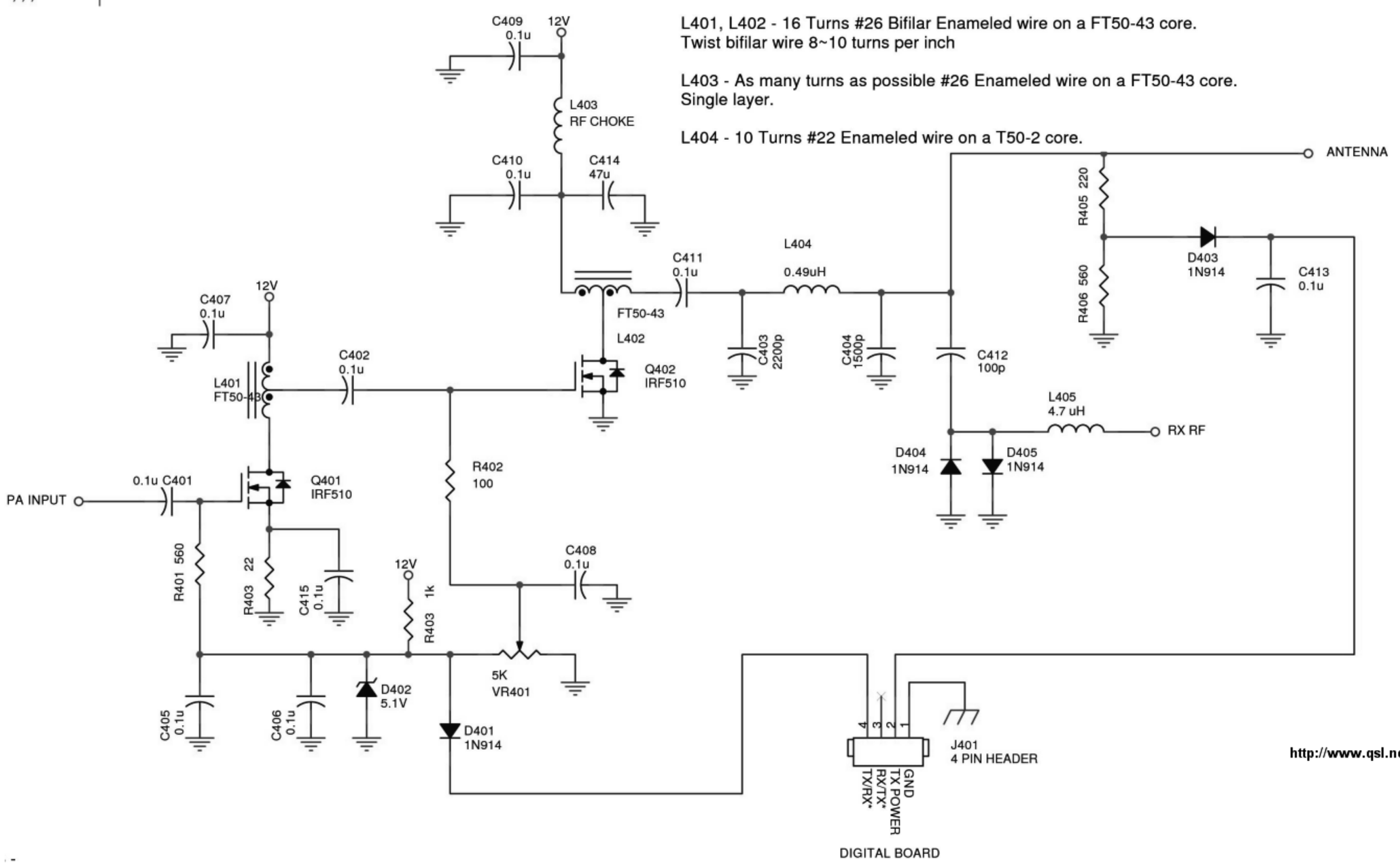

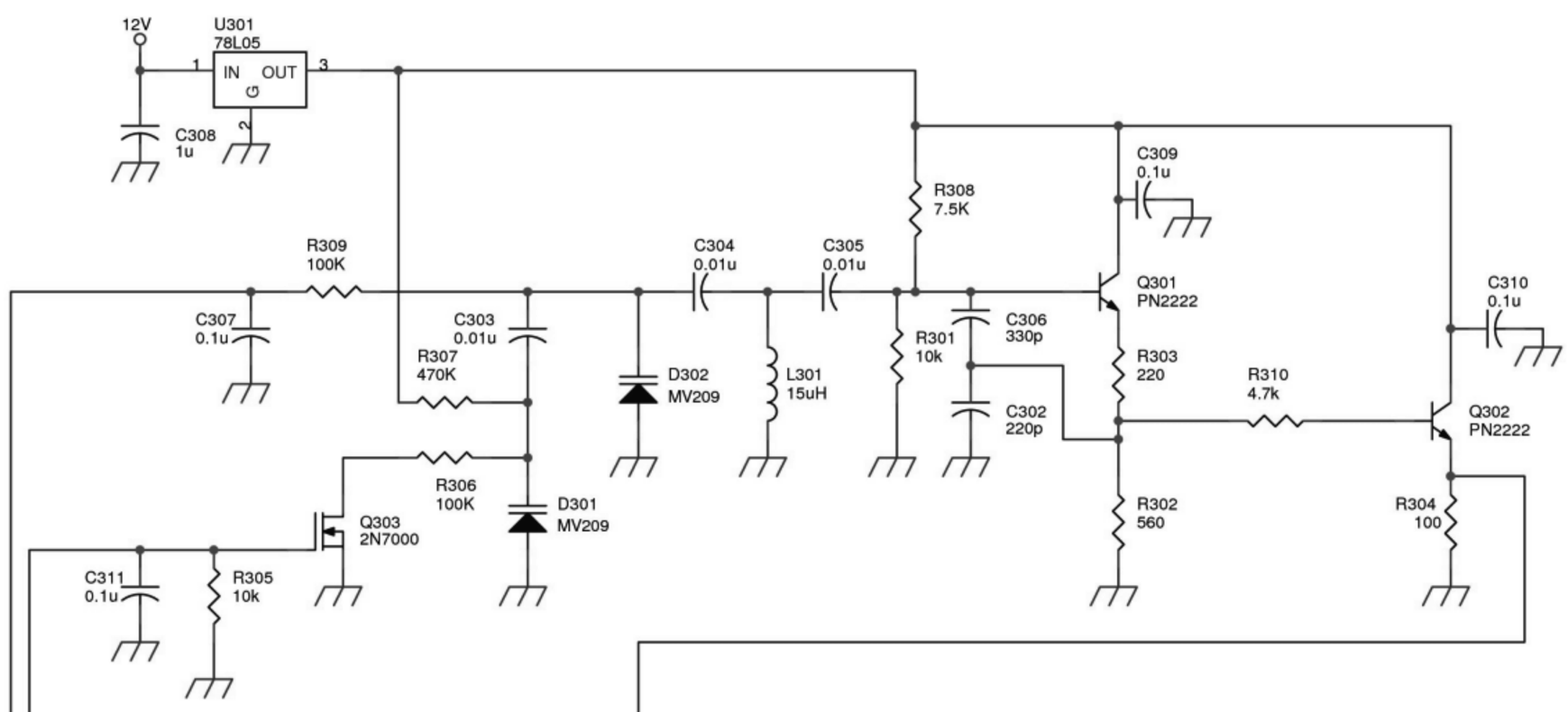

L1 - 52 Turns #26 Enameled wire on a T50-2 core.
Set Vtune to 1 volt and remove turns until output frequency is between 3.08 and 3.14 MHz.

Use NPO capacitors for C7, C9 and C16.

Assemble the circuit so that the components are rigid with good mechanical stability.