KENWOOD

Document Copyrights

Copyright 2006 by Kenwood Corporation. All rights reserved.

No part of this manual may be reproduced, translated, distributed, or transmitted in any form or by any means, electronic, mechanical, photocopying, recording, or otherwise, for any purpose without the prior written permission of Kenwood.

Disclaimer

While every precaution has been taken in the preparation of this manual, Kenwood assumes no responsibility for errors or omissions. Neither is any liability assumed for damages resulting from the use of the information contained herein. Kenwood reserves the right to make changes to any products herein at any time for improvement purposes.

HF SSB RADIOTELEPHONE

TK-80

SERVICE MANUAL

KENWOOD

Kenwood Corporation

© 2006-4 PRINTED IN JAPAN
B51-8758-00 (N) PDF

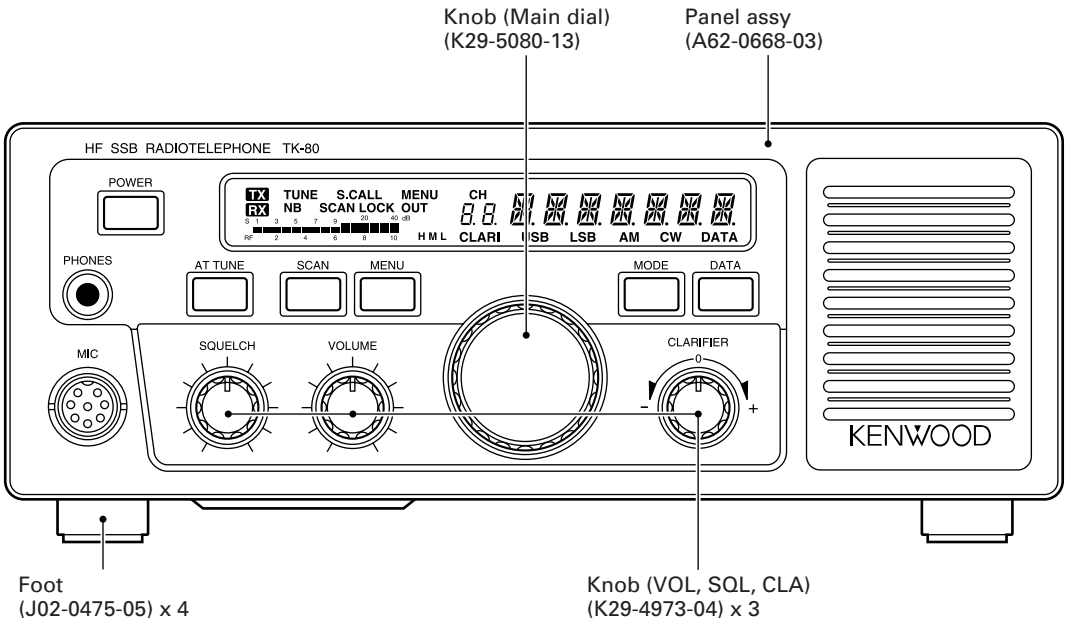

CONTENTS

GENERAL 2
REALIGNMENT 2
INSTALLATION 8
CIRCUIT DESCRIPTION 10
SEMICONDUCTOR DATA 21
COMPONENTS DESCRIPTION 26
PARTS LIST 30
EXPLODED VIEW 45
PACKING 46
ADJUSTMENT 47
TERMINAL FUNCTION 55
LEVEL DIAGRAM 59
PC BOARD
- **LCD ASSY (B38-0739-15)** 62
- **FINAL UNIT (X45-3520-21)** 64
- **CONTROL UNIT (X53-3570-21)** 68
- **TX-RX UNIT (X57-4660-21)** 72

INTERCONNECTION DIAGRAM 76
SCHEMATIC DIAGRAM
- **LCD ASSY (B38-0739-15)** 78
- **FINAL UNIT (X45-3520-21)** 80
- **CONTROL UNIT (X53-3570-21)** 82
- **TX-RX UNIT (X57-4660-21): TX-RX** 84
- **TX-RX UNIT (X57-4660-21): PLL** 88

BLOCK DIAGRAM 90
KAT-2 (Internal Automatic Antenna Tuner) 92
KPE-1 (Selective Call Kit) 104
SPECIFICATIONS ..... BACK COVER

GENERAL / REALIGNMENT

INTRODUCTION

SCOPE OF THIS MANUAL

This manual is intended for use by experienced technicians familiar with similar types of commercial grade communications equipment. It contains all required service information for the equipment and is current as of the publication date. Changes which may occur after publication are covered by either Service Bulletins or Manual Revisions, which are issued as required.

ORDERING REPLACEMENT PARTS

When ordering replacement parts or equipment information, the full part identification number should be included. This applies to all parts: components, kits, or chassis. If the part number is not known, include the chassis or kit number of which it is a part, and a sufficient description of the required component for proper identification.

PERSONAL SAFETY

The following precautions are recommended for personal safety:

- DO NOT transmit until all RF connectors are verified to be secure and any open connectors are properly terminated.
- SHUT OFF and DO NOT operate this equipment near electrical blasting caps or in an explosive atmosphere.
- This equipment should be serviced only by qualified technicians.

SERVICE

This radiotelephone is designed for easy servicing. Refer to the schematic diagrams, printed circuit board views, and alignment procedures contained within.

1. Modes

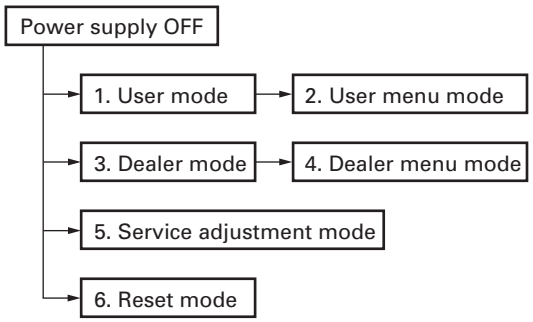

Note:

DIP SW1 is set to "ON" when shipped from the factory. If the dealer mode, service adjustment mode, and reset mode fail to function, please check to see that DIP SW1 is set to "ON".

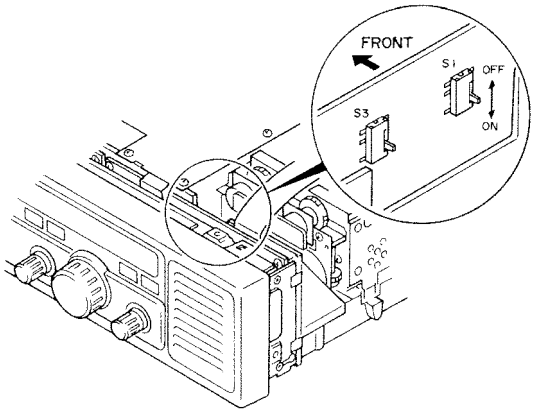

No.	Mode	Function
1	User mode	For normal use.
2	User menu mode	Selects the user menu.
3	Dealer mode	Writes the various data settings to the memory channels.
4	Dealer menu mode	Selects the dealer menu.
5	Service adjustment mode	Selects the adjustment items for the service adjustment mode menu.
6	Reset mode	Clears all memory channels and the menu contents.

REALIGNMENT

2. How to Enter Each Mode

No.	Mode	Operation
1	User mode	Power ON
2	User menu mode	[User mode] + [MENU]
3	Dealer mode	[MENU] + [MODE] + Power ON
4	Dealer menu mode	[Dealer mode] + [MENU]
5	Service adjustment mode	[SCAN] + [DATA] + Power ON
6	Reset mode	[MENU] + [MODE] + [DATA] + Power ON

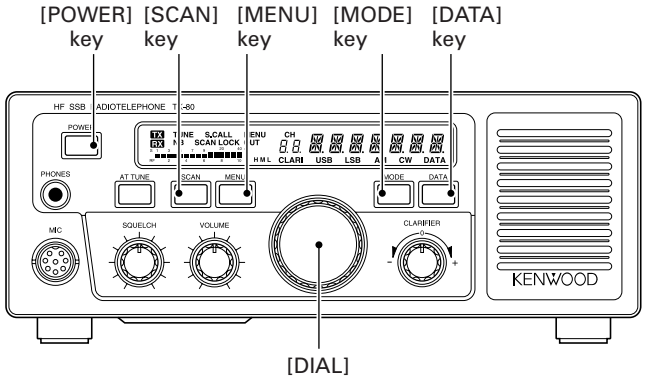

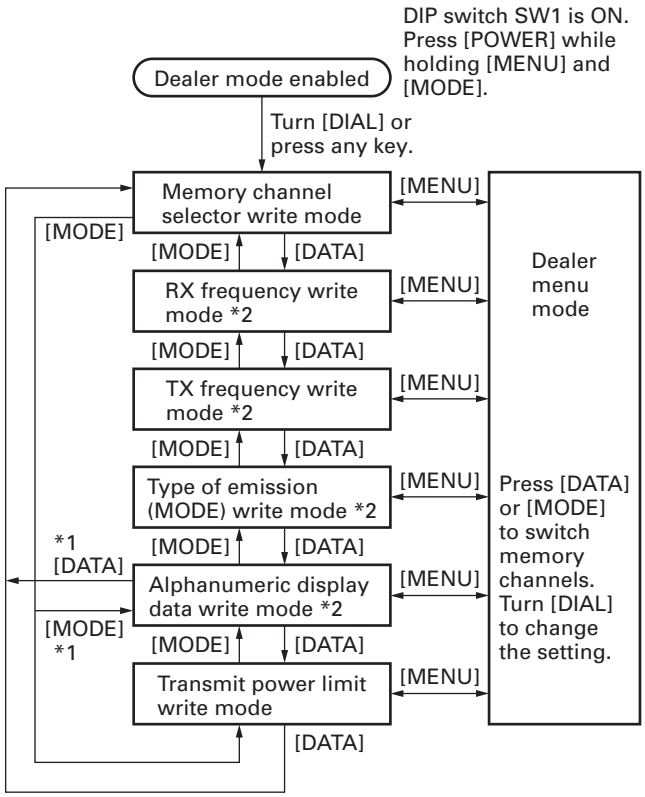

*1 : When the specified diode D7 is not present.
*2 : Press [SCAN] to more to the next digit.

3. Reset Mode

3-1. All Reset

Restores the factory default settings.

Set DIP SW1 to ON, then press [POWER] while holding [MENU], [MODE], and [DATA].

"HELLO" appears on the display, indicating the system has been reset.

- All reset does not clear adjustment data settings.
- If the power supply is cut off during all reset, the forced all reset is executed as soon as power is restored.

3-2. Battery Reset

When the power supply from the backup battery is interrupted, the factory default settings are restored, except for memory channels 01 to 10.

- Battery reset occurs automatically whenever the power backup fails to function.

4. Dealer Mode

- This mode allows dealers to select functions for users.
- Dealers can customize the receive frequency, transmit frequency, type of emission (MODE), alphanumeric display, transmission power limit, and set functions.

Contents to be customized	Mode to be used	Purpose
Receive frequency	Receive frequency write mode	To write to memory channels
Transmit frequency	Transmit frequency write mode	
Type of emission (MODE)	Type of emission (MODE) write mode	
Alphanumeric display	Alphanumeric display data write mode	
Transmit power limit	Transmit power limit write mode	
Set function	Menu mode	Select function setting
-	Memory channel selector mode	To select memory channels

REALIGNMENT

4-1. Procedure ( ): Initial value

1) Press [POWER] while holding [MENU] and [MODE].

Dealer mode display

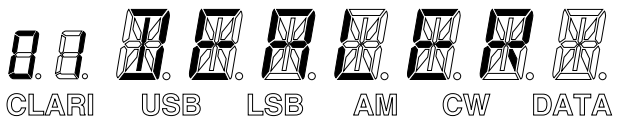

Turn [DIAL] or press any key, and enter Memory channel selector mode.

■ Memory channel selector mode (01)

This mode is for selector memory channels when writing frequency and other information to memory channels.

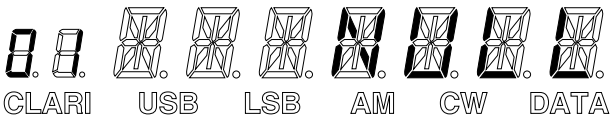

Second time: 01 USB only. The others are blank.

1) When [DIAL] is turned, channels, including those not entered in memories, are switched continuously.

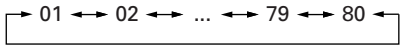

2) Pressing [DATA] enables the receive frequency write mode.

■ Receive frequency write mode (00.000.00)

This mode is for writing receive frequencies to memory channels. The frequency is set in single digits starting from the 10MHz to the 10Hz digit. The 1Hz digit is defaulted to "0".

1) Turning the [DIAL] changes the digit to its minimum frequency setting.
2) When the setting of one digit is completed, press [SCAN] to move to the next digit. Digits are set in order from the 10MHz digit to the 10Hz digit. (When setting the 10Hz digit, for example, the display shows the previously entered digits: 12.345.56)
3) Pressing [DATA] enables the transmit frequency write mode.

Note:

- Setting begins from the 10MHz digit when the receive frequency write mode is first enabled.
- The set frequencies are checked to confirm they are within the specified receive frequency range.
- Setting all digits to "0" initializes the memory channel.
- In the receive frequency write mode, the digit being set flashes as it displays the frequency.
- If the transmit frequency happens to be the default setting (00.000.00), when writing the receive frequency is completed, the receive frequency setting is automatically written to the transmit frequency memory channel as well.
- Leading zeros are not suppressed in the frequency display.

■ Transmit frequency write mode (00.000.00)

This mode is for writing transmit frequencies to the memory channels. The frequency is set in single digits starting from the 10MHz digit to the 10Hz digit. The 1Hz digit is defaulted to "0".

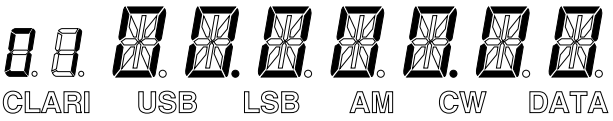

1) Turning the [DIAL] changes the digit to its minimum frequency setting.
2) When the setting of one digit is completed, press [SCAN] to move to the next digit. Digits are set in order from the 10MHz digit to the 10Hz digit.
3) Pressing [DATA] enables the type of emission (MODE) write mode. (When setting the 10Hz digit, for example, the display shows the previously entered digits: 12.345.56)
4) When wishing to use the memory channel as a receive-only channel, set all digits to "0", then press [DATA] to enable the type of emission (MODE) write mode.

Note:

- Setting begins from the 10MHz digit when the transmit frequency write mode is first enabled.
- The set frequencies are checked to confirm they are within the specified transmit frequency range.
- Setting all digits to "0" changes the memory channel to a receive-only channel.
- In the transmit frequency write mode, the digit being set flashes as it displays the frequency.
- Leading zeros are not suppressed in the frequency display.

■ Type of emission (MODE) write mode (USB)

This mode is used to write the type of emission to the memory channel.

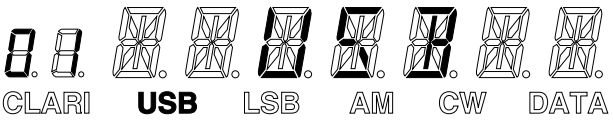

1) Turning the [DIAL] triggers a display that scrolls continuously in the following order:

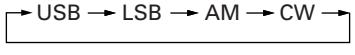

2) Pressing [DATA] enables the alphanumeric display data write mode.

REALIGNMENT

■ Alphanumeric display data write mode (Blank)

This mode is used to write alphanumeric display data (up to 7 digits) to the memory channels.

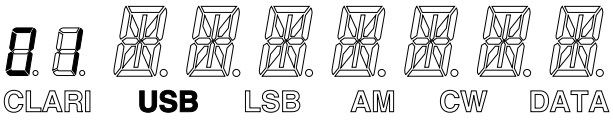

1) Turning the [DIAL] triggers a display that scrolls continuously in the following order:

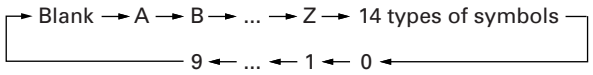

Blank	H	P	X	,	*	7
A	I	Q	Y	-	0	8
B	J	R	Z	/	1	9
C	K	S	$	=	2	
D	L	T	1/1	@	3	
E	M	U	<	\	4	
F	N	V	>	_	5	
G	O	W	+	#	6	

2) Digits are set starting from the left side. Pressing [SCAN] moves the cursor one digit position to the right.
3) Pressing [DATA] changes control to the:

- Transmit power limit write mode (when specified diode D7 is installed)
- Memory channel selector mode (when specified diode D7 is not installed)

■ Transmit power limit write mode (100W)

This mode is used to write the transmit power limit to the memory channel.

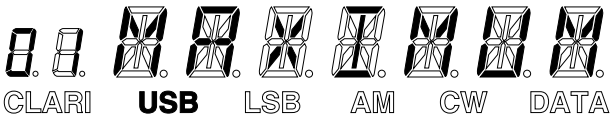

1) Turning the [DIAL] triggers a display that scrolls continuously in the following order:

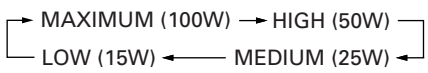

2) Press [DATA] to enable the memory channel switching mode.

5. Dealer Menu Mode

This mode is used to select functions the dealer sets for the user.

5-1. Selecting the dealer menu mode

Press [MENU] while in the dealer mode's memory channel selector mode or any of its write modes.

5-2. Menu number selection

To select menu numbers, press the [DATA] or [MODE] keys.

5-3. Selecting the setting contents

To change menu settings, turn the [DIAL].

Note:

- Menu numbers are designed to scroll in order continuously.
- Menu items are designed to scroll in order continuously.
- If the menu is scrolling, turn the [DIAL] to display the item, then select the desired setting.
- The selective call ON/OFF status and any memory code setting changes from the User menu mode will be reflected in the Dealer menu's settings.

Menu	Content
00	VFO transmit power and receive-only setting
01	MIC gain H/L setting
02	CW/selective call IF filter attachment
03	DATA (AFSK) IF filter attachment
04	AIP ON/OFF
05	AUX ON/OFF
06	Scan speed setting
07	BC AM 1/9kHz steps
08	Clarifier 10/1Hz steps
09	VOX ON/OFF
10	CW delay time setting (full/semi break-in setting)
11	CW sidetone/pitch frequency setting
12	Power setting (H, M, L) display ON/OFF
13	Channel number display ON/OFF
14	DATA mode AFSK/FSK setting
15	DATA (FSK) IF filter selection
16	FSK shift width setting
17	FSK key polarity setting
18	FSK H/L tone setting
19	FSK reverse setting
20	SCAN SW actuation enable/disable
21	MENU SW actuation enable/disable
22	MODE SW actuation enable/disable
23	DATA SW actuation enable/disable
30	Selective call ON/OFF
31	ID (own unit) code setting

REALIGNMENT

Menu	Content
32	Squelch opening time (unmute time) setting
33	Memory code A setting (call ID)
34	Memory code B setting (call ID)
35	Memory code C setting (call ID)
36	Memory code D setting (call ID)
37	Memory code A setting (character)
38	Memory code B setting (character)
39	Memory code C setting (character)
40	Memory code D setting (character)
41	User manu memory code setting ON/OFF
42	ID delay time setting

6. Transfer Mode

This mode is used to copy the memory and menu data from one TK-80 unit to one or more others to create "TRANS".

6-1. Procedure

1) Connect a cross cable (E30-3232-05) to the ACC1 connectors on two TK-80 units, as shown in the figure.
2) Turn on the power of the unit receiving the data.
3) Enable the Dealer mode in the unit to be transferred, then press [DATA].
   As the unit enters the Dealer mode, it automatically detects the connected second TK-80 unit, displays "TRANS" and begins the transferring transmission.
4) When transferring ends normally, the first TK-80 returns to the Dealer mode which is then shown on its display.

Note:

- Transfer is not possible when the destination diode (D8, D9, D10, D15) setting of the two units differ.
- Transfer is not possible when neither of the two units is equipped with transmit power setting diode (D7).

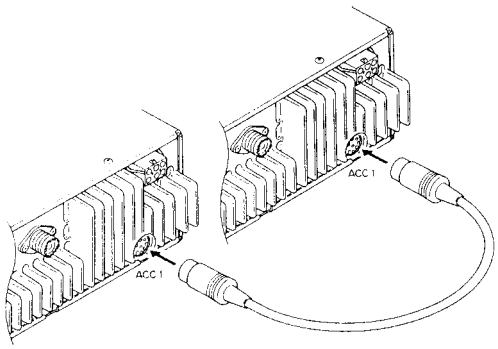

7. VFO Functions

Dip SW3 is set to ON when shipped from the factory. Should the VFO mode fail to function, please check to see that Dip SW3 is set to ON.

7-1. Procedure

1) Press [MENU] to enable the user Menu mode.
2) Press [DATA] or [MODE] to select No. 00.
3) Use [DIAL] to switch the memory to VFO.
4) Press [MENU] to select VFO.

7-2. Description

1) [DIAL] changes from selecting memory channels to selecting VFO frequencies.
2) [SCAN] changes to selecting the step frequency and the F. LOCK function.
   Pressing [SCAN] scrolls through the settings in the following order:
   10Hz → F. LOCK → 100kHz → 1kHz → 10Hz
   Turning the [DIAL] after changing the step frequency rounds the lower digit off to "0".
3) When in the user Menu mode, memory channel frequencies and type of emissions (MODE) are set in the VFO at the point control is switched from Memory to VFO.
4) [DIAL] and [MENU] are disabled during F. LOCK.
5) Even if AT tuning is established during VFO, the changing of the frequency automatically credits the state of AT through.

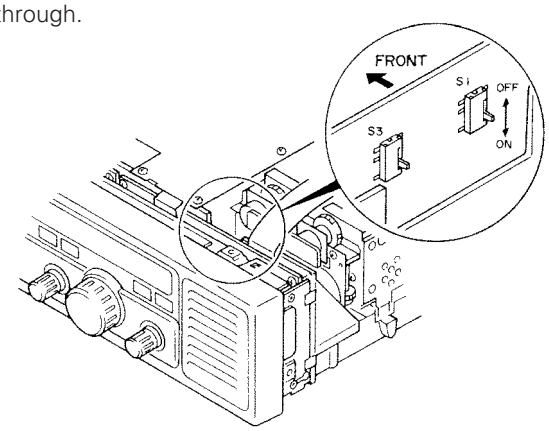

8. Personal Computer Interface

In addition to commands (in the instruction manual) made available to users, the SR (system reset) command is made available only to dealers.

Note:

- SRP1 = Reset the user menu
  SRP2 = Reset all
- The reset user Menu command resets all menu settings to the factory defaults.

REALIGNMENT

9. User Menu Mode

This mode enables users to select various settings to suit their individual needs. The items that can be modified are listed below:

Menu	Content
00	VFO/M
01	Transmit power switching
02	NB ON/OFF
03	Display switching frequency/alphanumeric
04	LOCK OUT ON/OFF
05	Scan busy stop switching TO/CO/OFF
06	Selective call ON/OFF
07	ID (own unit) code display
08	Memory code A setting (call ID)
09	Memory code B setting (call ID)
10	Memory code C setting (call ID)
11	Memory code D setting (call ID)
12	Memory code A setting (character)
13	Memory code B setting (character)
14	Memory code C setting (character)
15	Memory code D setting (character)

9-1. Selecting settings

- Begin by pressing [MENU] to display the User menu.
- Press [MODE] or [DATA] to select the desired item number.
- Use [DIAL] to change the setting.
- Press [MENU] once more to complete the change.

Note:

- Menu numbers are designed to scroll in order continuously.
- Menu items are designed to scroll in order continuously.
- Menu item number "00" can only be set when DIP SW3 is set to ON.
- Menu item numbers 08 to 15 can only be set when the user memory code setting in the Dealer menu mode is set to ON.
- Menu item numbers 01 and 04 represent the channels prior to entering the user menu mode.
- If a Selective call kit is not installed, setting item number 06 (user's own office code) to ON will only produce on the display. The selective call mode will not be enabled.
- Switching the [MENU] key ON/OFF can be inhibited from the Dealer menu mode.

INSTALLATION

1. Installing the AT unit (KAT-2: Option)

Remove the case and shielding cover in advance.

1. Use screws (❶) to install the Antenna tuner unit (KAT-2).
2. Before inserting the connector, cut the R101 wire.
3. Connect the lead with the connector like pull out to the front side to CN11 (❷) on X45-3620-21.
4. Connect the coaxial cable's white-marked line to the X45's CN5 (❸) (AT1) and the other line to CN6 (❹) (AT2).
5. Insert the flat cable from the tuner unit in CN6 (❺) of control unit X53-3570-21.
6. Take care not to pinch the lead when reattaching the case.

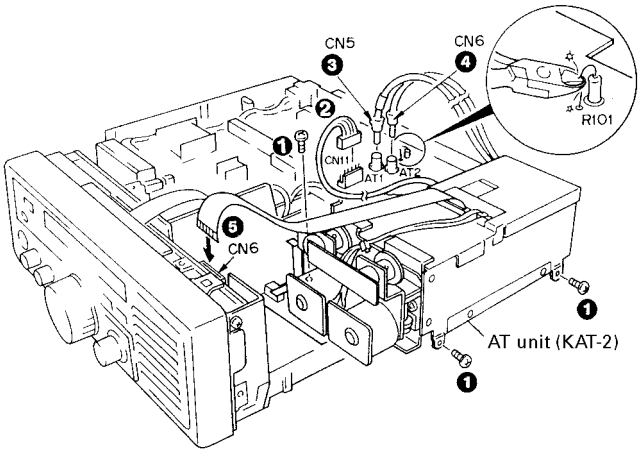

2. Installing the selective call unit (KPE-1: Option)

Remove the case in advance.

1. Remove the two screws (❶) on the upper left and right sides of the front panel, then loosen the two lower screws (❷) half way and pull the front panel forward.

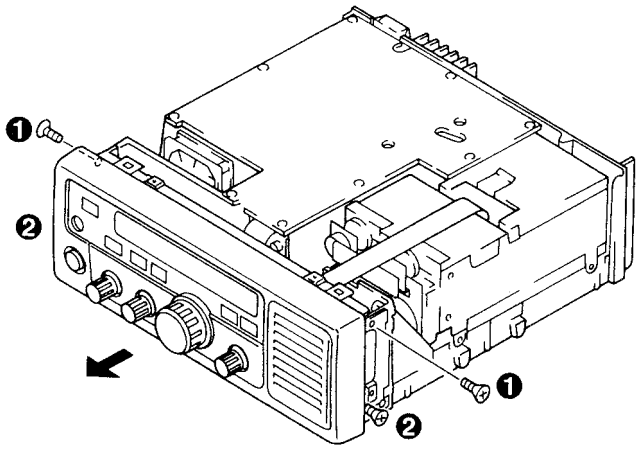

2. As shown in the figure, set the front panel down on its face, mount the optional circuit board X52-330 (selective call) and secure it with the four (❸) screws.
3. Connect the accessory flat cable (❹) to CN2 of X53-3570-21 and CN2 on the KPE-1, then connect the accessory lead with the connector (❺) to CN1 of the KPE-1 and CN13 (❻) on the X57-4660-21 (bottom side).
4. Take care not to pinch the lead when reattaching the case.

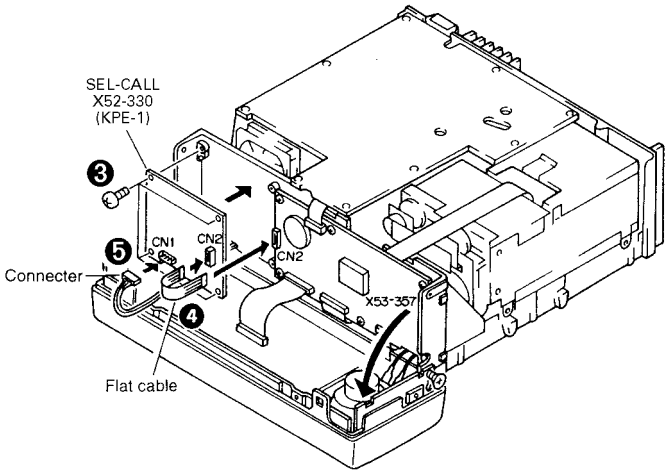

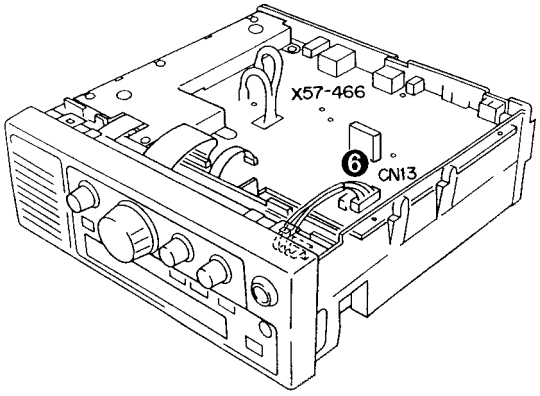

INSTALLATION

3. Installing the optional TCXO (SO-2 or accessory of KPE-1)

1. Remove the screws (❶) securing the shield plate, then remove the shield plate.
2. Remove the screws (❷) holding the X57-466 circuit board.
3. Remove the CN19 (black) (❸) and CN1 (red) (❹) connectors.
4. Prior to installing the optional TCXO (SO-2 or accessory of KPE-1), cut the lead wires on R682 and R683.
5. Install the optional TCXO (SO-2 or accessory of KPE-1) and apply solder to the soldered side.
6. Take care not to pinch the lead when reattaching the case.

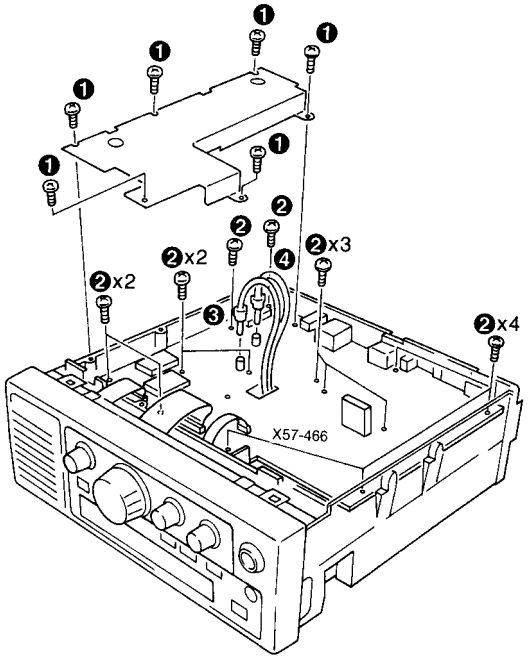

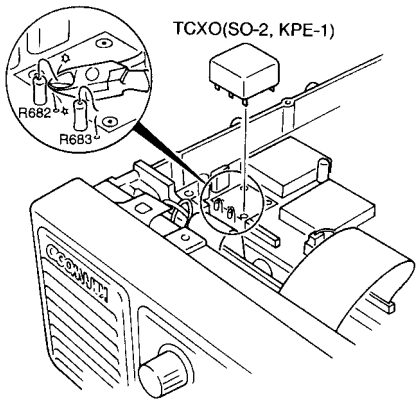

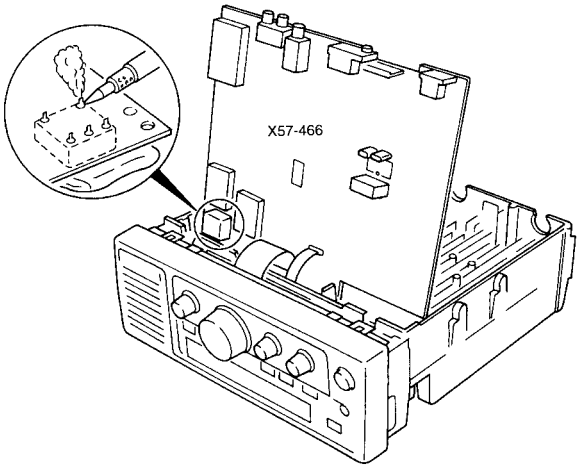

4. Installing the IF filter (YK-107C: Option)

1. Install the YK-107C and apply solder to the soldered side.

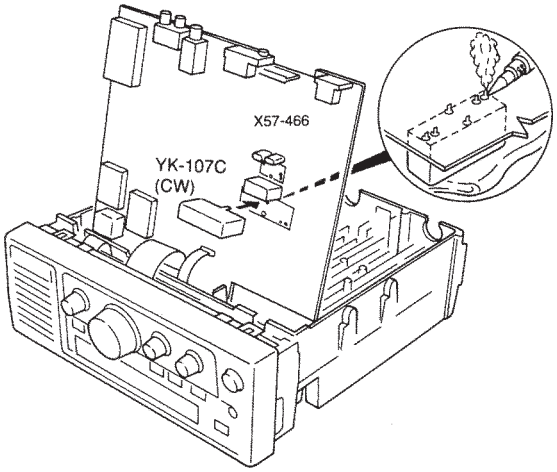

5. Installing the IF filter (KIF-1: Option)

1. Install the optional KIF-1 and apply solder to the soldered side.
2. After installing the IF filter, set the unit to dealer mode.

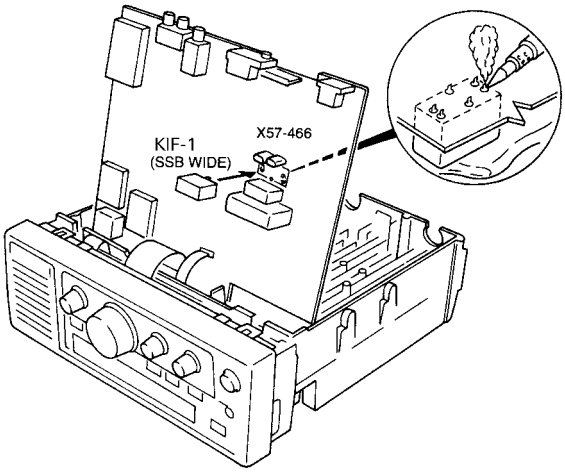

CIRCUIT DESCRIPTION

1. Frequency Configuration

The TK-80 uses double conversion in all modes.

Mode	Display frequency
USB/LSB	Carrier point frequency
CW	Transmission carrier frequency
AM	Transmission carrier frequency
FSK	Mark transmission frequency
AFSK	Carrier point frequency

Table 1 Display frequency in each mode

The receiver frequency in SSB mode is given by the following equation when the receiver tone produced by the input frequency (f_{IN}) from the antenna is zero beat (when an SSB signal with a carrier point of fIN is zeroed in):

$$f_{IN} = f_{LO1} - f_{LO2} - f_{CAR} \quad \text{..... (1)}$$

Since all these frequencies are generated by the PLL circuit, as shown in Figure 2 (PLL circuit frequency configuration), the receiver frequency is determined only by the reference frequency, f_{STD}, and the PLL divide ratio. This means the accuracy of the reference frequency determines the accuracy of the operating frequency of the transceiver.

The accuracy of the reference crystal oscillator used in the TK-80 is 10ppm (–10°C to +50°C). The accuracy of the optional temperature-compensated crystal oscillator (TCXO SO-2) is 0.5ppm (–10°C to +50°C).

In SSB transmission mode or in other modes, the frequency is determined by the reference frequency (f_{STD} and the PLL divide ratio). Table 1 lists the display frequencies in the various modes.

The pitch of the incoming signal in CW mode can be varied in 50Hz steps in the range of 400 or 800Hz without changing the center frequency of the IF filter (variable CW pitch system).

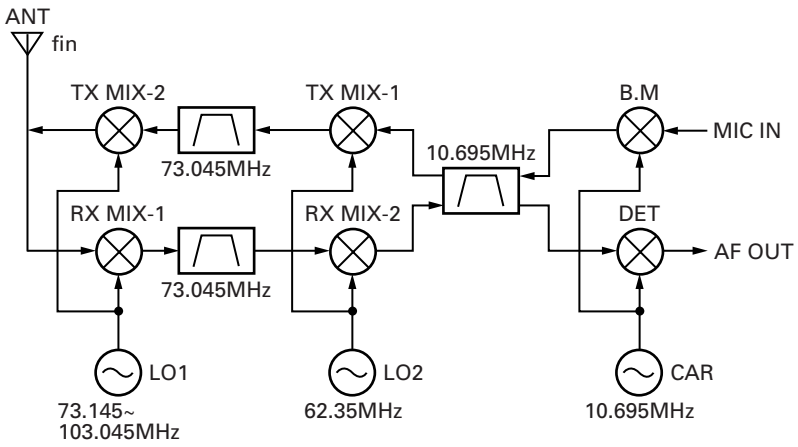

Fig. 1 Frequency configuration

2. PLL Circuit Configuration

The TK-80 PLL circuit uses a reference frequency of 20MHz, and covers 100kHz to 30MHz. Figure 2 shows a PLL block diagram and frequency configurations.

2-1. Reference oscillator circuit

The reference frequency (f_{STD}) for frequency control is generated by the 20MHz crystal oscillator, X501 and Q525. The 20MHz reference frequency is supplied to DDS IC500 and IC501 and PLL IC502.

The crystal oscillator circuit can be replaced by an optional TCXO (SO-2 or accessory of KPE-1). The TK-80 can be switched to the TCXO by removing resistors R682 and R683.

2-2. LO1 (PLL loop)

Q531, Q533, and Q535 are VCOs.

Q531 (VCO1) generates a signal of 73.145 to 83.544MHz.

Q533 (VCO2) generates a signal of 83.545 to 94.544MHz.

Q535 (VCO3) generates a signal of 94.545 to 103.045MHz.

The 20MHz reference signal of f_{STD} is input to pin 15 of IC502 and is divided by 40 to produce a 500kHz comparison frequency. The output signal from the VCO is mixed with a 53.545 to 54.045MHz signal from the PLL (described later) and IC503 (Mixer) to produce a 19.5 to 49.5MHz signal. It is then input to pin 6 of IC502, divided, and compared with the 500kHz signal by the phase comparator. The VCO frequency is then locked. The divide ratio date is supplied by the digital unit.

At IC500, a 1.195 to 1.695MHz digital signal is generated and the CP500, CP501 ladder resistor and Q522 D/A converter are used to convert it into an analog signal. That signal is put through a low-pass filter and mixed with 10MHz at mixer IC504 to produce 8.305 to 8.805MHz.

Furthermore, 62.35MHz oscillated by X502 and Q517 is mixed at mixer IC505 to become the above mentioned 53.545 to 54.045MHz signal.

CIRCUIT DESCRIPTION

2-3. LO2 (PLL loop)

The part oscillated by X502 and Q517 is output to LO1 cancel loop after passing through the Q518 buffer and input into mixer IC505. The other part is output from CN502 as LO2.

2-4. CAR

A digital signal is generated near 695kHz at IC501, and the analog signal converted by the CP502, CP503 ladder resistors and Q522 D/A converter are mixed with the 10MHz generated from the chop output of IC501 at IC506. This is then output as 10.695MHz through the band-pass filter and the amplifier.

During receiving AM mode, the DDS oscillation is stopped. In FSK mode, the internal register of IC501 is switched for direct FSK modulation by the external RTK signal during selective call mode code transmission by the ABSL signal from the CPU.

2-5. DDS circuit configuration

The DDS IC has been developed with standard cells to implement a high-speed circuit and large-capacity ROM at low cost.

■ IC configuration

IC configuration is as follows:

- There are two 28 bit registers for setting frequency data, one 28 bit frequency shift register for addition to the frequency registers, a 23 bit parallel signal input section for frequency modulation with parallel signals, and a data entry and selection section.
- There is a frequency-modulation section comprising 28 bit adders for adding frequency data and frequency modulation data, a phase data operation section that adds data from the frequency modulation section and 28 bit phase data register, and a SIN-ROM that converts phase data to sine waves.

■ Frequency/shift data setting

Using serial signals synchronized with clock pulses, 30 bits (2 bits that specify the destination for which data is set, and 28 bits of frequency data) are set in the three internal registers.

■ Frequency register selection

The data set in the two frequency registers is selected by the SLAB input of the DDS IC. This pin handles the ABSL signal for IC501, and the CASL signal for IC500. This function eliminates the need for the TK-80 to set frequency data for each transmission/reception with the microprocessor.

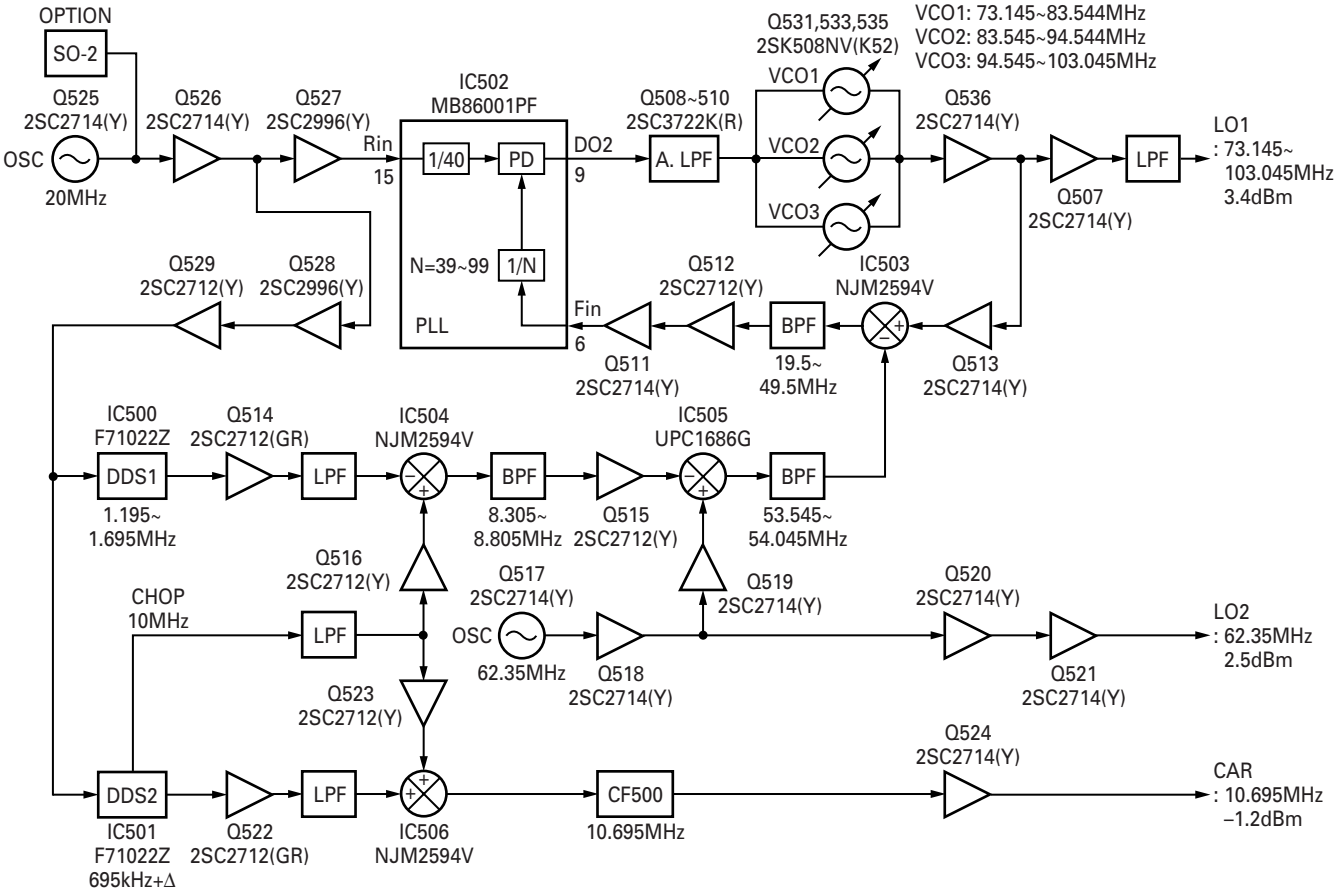

Fig. 2 PLL block diagram and frequency configuration

CIRCUIT DESCRIPTION

■ Frequency data selection

The SPSL input of the DDS IC selects whether to use the data in the internal frequency shift register or the data from the parallel input as frequency modulation data.

■ Frequency modulation

The MDEN input of the DDS IC enables or disables frequency modulation. When frequency modulation is enabled, frequency data is added, and the result is input to the phase data operation section.

■ Phase data operation

The target frequency phase data is output by accumulating 28 bit frequency data in the 28-bit phase accumulator.

$F_{OUT} = Fs/2^{28} \times Dsum$

Fs: DDS IC input frequency/2

Dsum: Frequency data + Frequency modulation data

If 2^{25} is set for Dsum when 1/8 Fs is output, the phase data must be increased by $\pi/8$.

So far, 28 bit absolute value operation has been used, but a 28 bit signed operation can also be used, assuming that the MSB is a sign. If complement data of 8000000 to FFFFFFFF (hex) is set, the phase moves in the negative direction for positive data.

■ SIN-ROM

Phase data from the phase data operation section is converted to sine wave data of 0000 to FFFF (hex) in 16 bit offset binary format (Fig. 3).

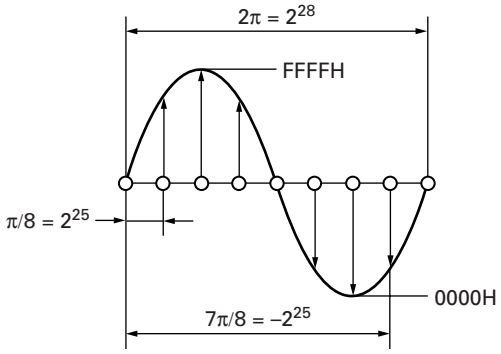

Fig. 3

3. Receiver Circuit Configuration

The configuration of the receiver circuit is double conversion with a first IF of 73.045MHz and a second IF of 10.695 MHz in SSB, AM, CW mode.

The incoming signal from the antenna passes through the antenna switch relay of the final unit, then through the 30 MHz low-pass filter, and goes to the TX-RX unit. The signal passes through a 30MHz low-pass filter in the TX-RX unit, and goes through the 8-segmented band-pass filters. If AIP is off, the signal passing through band-pass filter is amplified by the RF amplifier, Q8, Q9, and is input to the first mixer, Q4 to Q7. If AIP is on, the signal bypasses Q8 and Q9 and goes directly to the first mixer. It is mixed with the LO1 signal by the first mixer to produce a first IF signal of 73.045MHz.

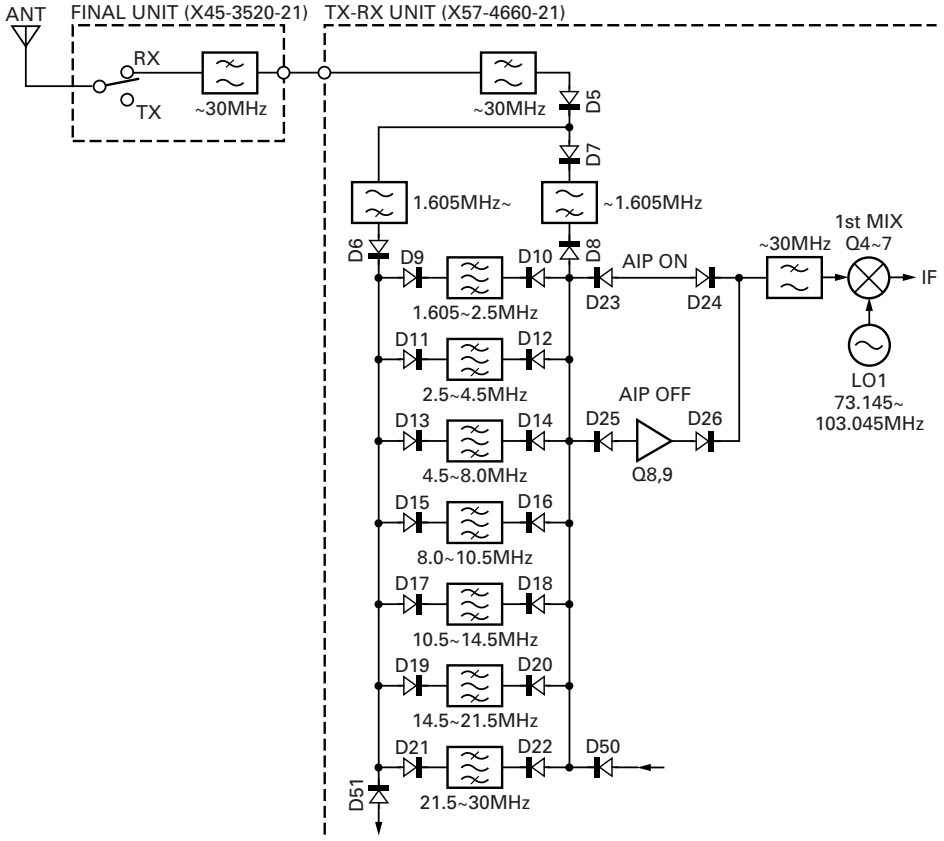

Fig. 4 Receiver front-end

CIRCUIT DESCRIPTION

The first IF signal of 73.045MHz passes through the MCF (XF1), is amplified by the IF amplifier Q10, and mixed with the 62.35MHz LO2 signal by the second mixer, Q11 and Q12, to produce a second IF signal of 10.695MHz.

The second IF signal of 10.695MHz is split into two. One signal goes to the NB amplifier and the other passes through the NB gate FET Q19. The signal then goes to the IF filter. There are four types of IF filters: 6kHz, 2.7kHz, 2.2kHz, and 500Hz (2.7kHz and 500Hz are optional). The signal passing through the IF filter is amplified Q21 and Q30, Q31 SSB, CW, FSK modes are product-detected in D52, D53 and AM mode envelope-detected in D54 and condenser.

After detection, the AF signal for each mode passes through analog switch IC3 and goes to AF preamplifier Q48.

After the preamplifier, the signal passes through the mute circuit Q49 has the volume controlled at IC6 and is amplified to the necessary electric power level at AF power amplifier IC7.

3-1. Receiver front-end

The signal input to the TX-RX unit passes through the 30 MHz low-pass filter, and signal above 1.605MHz goes to seven band-pass filters. When AIP is off, the signal passes through each band-pass filter, D25 and D26 turn on and D23 and D24 turn off, and the signal is amplified by about 13dB by Q8, Q9 and output to the first mixer. If AIP is on, D25 and D26 turn off and D23 and D24 turn on, and the signal is output directly to the first mixer without passing through Q8 and Q9. The first mixer is a quad balanced mixer, Q4 to Q7 (Fig. 4).

3-2. Noise blanker circuit

The 10.695MHz IF signal generated from the first IF of 73.045MHz by the second mixer is input to the IF amplifier Q19, sent through Q18 amplified by noise amplifier Q801, Q802 and Q804, sent through buffer Q806 and noise-detected by D800. This signal switches Q805 and Q807, Q808 and controls Q19 in the TX-RX unit. Q19 controls Q20 and blanks the noise (Fig. 5).

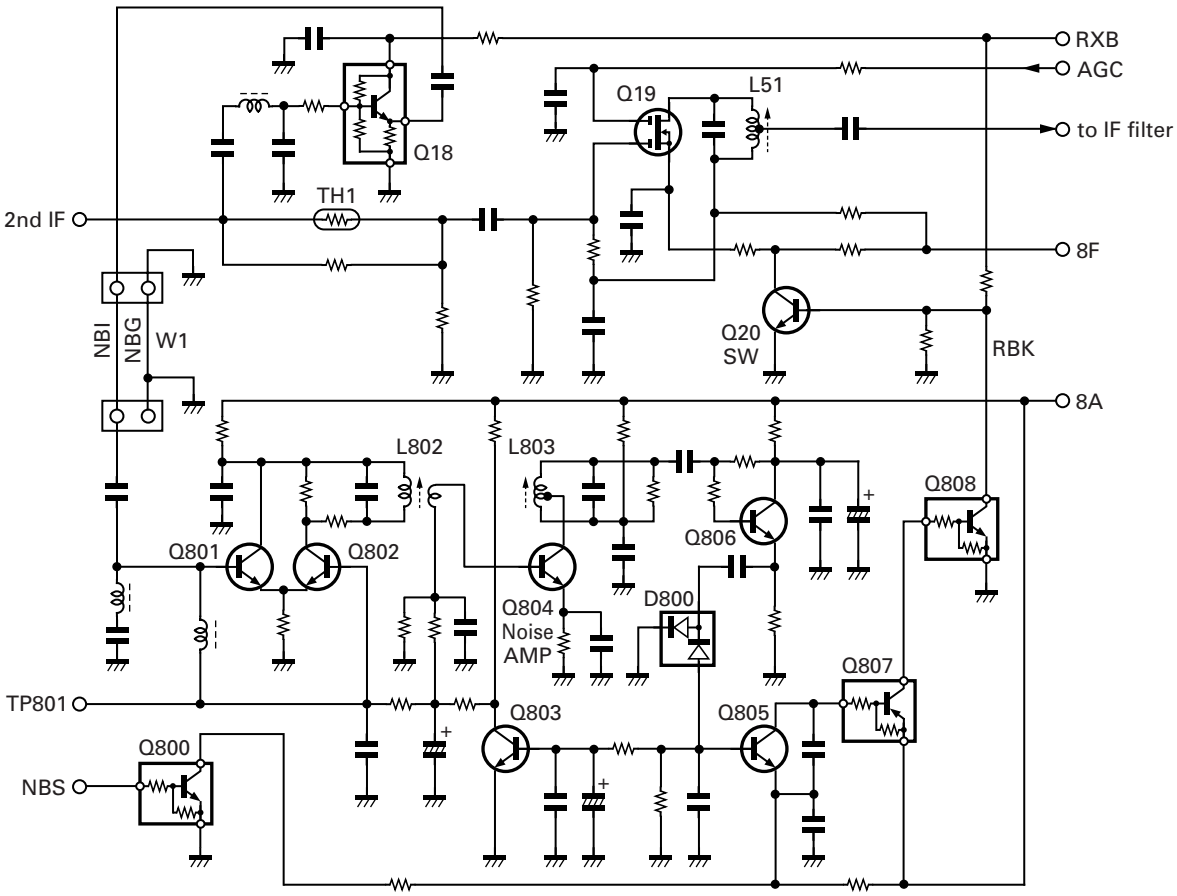

Fig. 5 Noise blanker circuit

CIRCUIT DESCRIPTION

3-3. Signal strength meter circuit

In all mode, the signal strength meter circuit comprises operational amplifier IC2. The signal level detected is input to pin 3 of IC2 (1/2) and amplified by about 8dB by IC2 (2/2), then goes to IC5 of the control unit (Fig. 6).

3-4. AGC circuit

The time constant for the signal envelope detected by IC1 is changed in each mode by the analog switch. The effective value, not the peak value, is used in AM mode (Fig. 6).

3-5. Squelch

The squelch volume voltage is input to A/D input pin 78 of the CPU IC5. The signal strength meter voltage made by squelch volume voltage and the TX-RX unit is compare processed in the CPU, controlling the ABK signal.

3-6. IF filter

There are two internal 10.695MHz IF filters and two optional, so a total of four can be installed.

10.695MHz filter	Part No./ name	Selection of each mode				
		CW	SSB	AM	DATA (AFSK)	DATA (FSK)
AM	L71-0433-15	-	-	◎	-	-
SSB-WIDE (Option)	L71-0457-05 /KIF-1	-	-	-	✳	✳
SSB	L71-0249-05	◎	◎	-	◎	◎
CW (Option)	L71-0283-15 /YK-107C	✳	-	-	-	✳

◎ represents the initial set value
✳ represents selections which can be used when the optional filter is attached
DATA (AFSK): SSB+DATA display
DATA (FSK): DATA display

Also, filter selection and DATA key settings are switched in the following dealer mode menu.

CH.02: CW FILTER	OUT/IN
CH.03: DATA (AFSK)-SSB WIDE FILTER	OUT/IN
CH.15: DATA (FSK)-IF FILTER FOR	SSB/SSB-W/AM/CW
CH.14: DATA MODE	AFSK/FSK

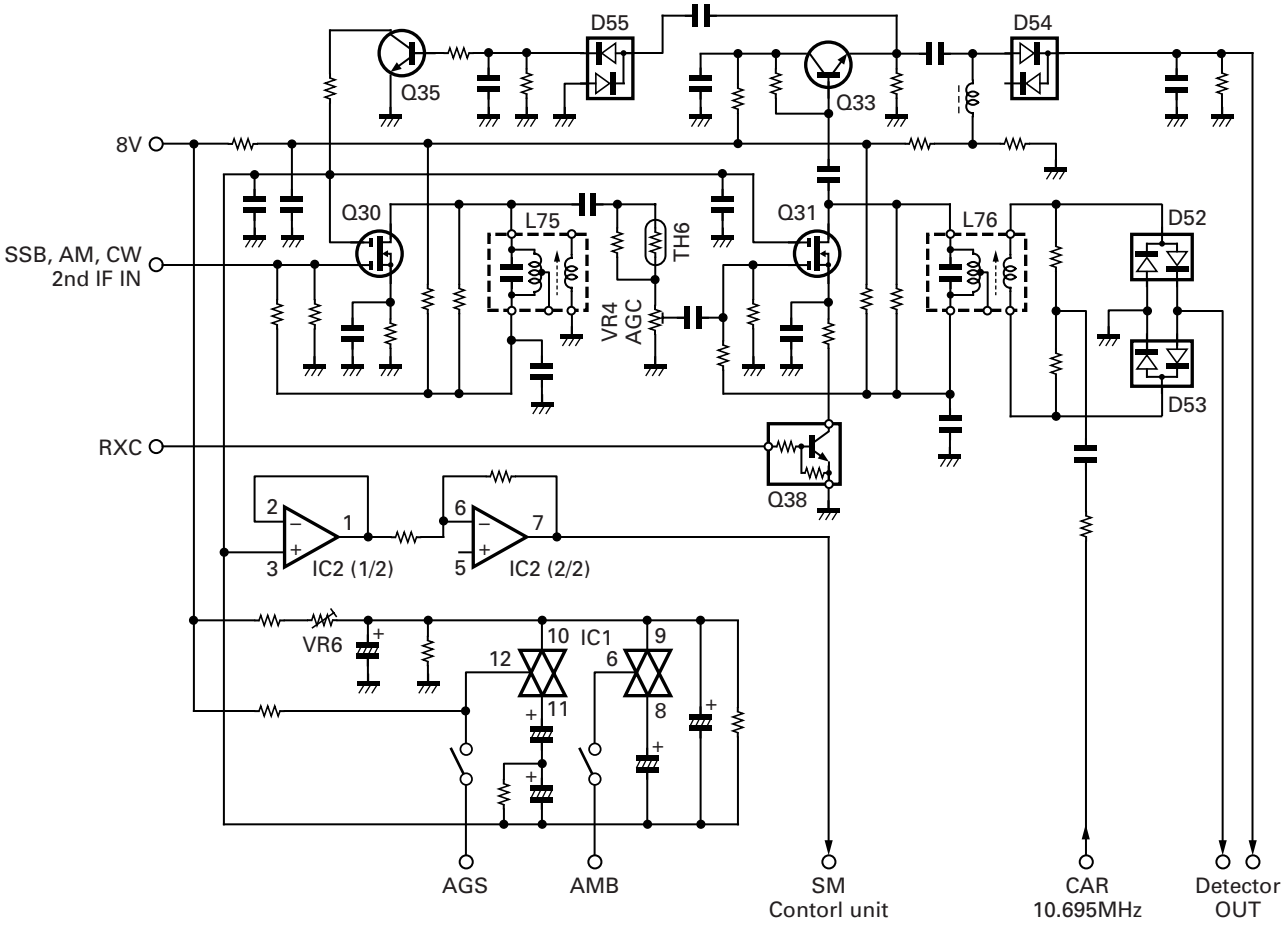

Fig. 6 S-meter and AGC circuits

CIRCUIT DESCRIPTION

Item	Rating
Center frequency (fo)	73.045MHz
Pass bandwidth	±7.5kHz or more at 3dB
Attenuation bandwidth	±30kHz or less at 20dB
Ripple	1dB or less
Insertion loss	2dB or less
Guaranteed attenuation	40dB or more at fo–910kHz
Terminal impedance	2kΩ±10% // L type
Temperature range	–30°C~+70°C

Table 2 MCF (XF1) (L71-0432-05)

Item	Rating
Nominal center frequency (fo)	10.695MHz
Pass bandwidth	6kHz or more at 6dB
Attenuation bandwidth	40kHz or less at 60dB
Ripple	2dB or less
Insertion loss	3dB or less
Guaranteed attenuation	60dB or more within fo±1MHz
Terminal impedance	1.2kΩ±10% // 6pF±10%

Table 3 MCF (XF3) (L71-0433-15)

Item	Rating
Nominal center frequency (fo)	10.695MHz
Center frequency deviation	Within ±200Hz at 6dB
Pass bandwidth and Attenuation bandwidth	Width 2.75kHz or more at 6dB
	±2.2kHz or less at 20dB
	±3.1kHz or less at 60dB
Ripple	2dB or less
Insertion loss	6dB or less
Terminal impedance	1.2kΩ±5% // 8pF±10%
Temperature range	–10°C~+60°C

Table 4 MCF (L71-0457-05) KIF-1: SSB WIDE (Option)

Item	Rating
Nominal center frequency (fo)	10.695MHz
Center frequency deviation	Within ±200Hz at 6dB
Pass bandwidth and Attenuation bandwidth	2.2kHz or more at 6dB
	±1.5kHz or less at 20dB
	±2.4kHz or less at 60dB
Ripple	2dB or less
Insertion loss	5dB or less
Guaranteed attenuation	60dB or more within fo±40kHz
Terminal impedance	1.2kΩ±5% // 6pF±5%

Table 5 MCF (XF2) (L71-0249-05)

Item	Rating
Nominal center frequency (fo)	10.695MHz
Center frequency deviation	Within ±80Hz (25°C, 6dB)
Pass bandwidth	500Hz or more (6dB)
Insertion loss	5dB±2dB
Terminal impedance	1200Ω // 6pF

Table 6 MCF (L71-0283-15) YK-107C: CW (Option)

4. Transmitter Circuit Configuration

The audio signal from the microphone enters CN 12 of the TX-RX unit. The signal then goes to IC9, the microphone amplifier. After amplifying part of IC9's output at Q54, it is detected by D59 and applied to the ALC terminal of IC9. The signal gain is properly adjusted by the D/A converter IC13 and passes through analog switch IC8, is amplified by Q50. The amplified signal is balance-modulated with the CAR signal (10.695MHz) input from CN9 by IC4 passed through Q51, and sent to the crystal filter passing through the filter, is amplified by Q24. The signal is CAR level adjusted by the D48 pin diode, and input to the mixer.

The 62.35MHz LO2 signal from the PLL unit is input from CN3 of the TX-RX unit, and mixed with the 10.695MHz signal which CAR level adjusted amplified by Q25 and Q26 to produce a 73.045MHz signal. The LO1 signal from the PLL unit is input from CN2 of the TX-RX unit, and mixed with the 73.045MHz signal passes through LC three-stage filter by Q27 and Q28 to generate the desired signal. The signal passes through the band-pass filter and is amplified by Q29 to produce the drive output, which goes to the final unit from CN19.

The signal is amplified to about 100W by Q1, Q2, Q3 and Q5, Q6. Harmonic components are attenuated by the filter unit and the signal is output from the antenna connector.

In AM mode, the signal is generated by unbalancing the carrier of SSB balance modulator IC4.

In CW mode, the signal is input to IC5 of the control unit. The sidetone monitor signal is generated by IC5, and amplified by audio amplifier Q79 and IC7, and output from the speaker. The CW control signal is output from IC5 of the control unit, and input to CN14 of the TX-RX unit to switch Q25 and Q26 and generate the CW signal.

4-1. ALC circuit

The forward wave voltage detected in the final unit passes through CN15 in the TX-RX unit, its level is potential dividing and it is applied to the differential amplifier comprising Q60 and Q61. When VSF is applied to the base of Q60, the emitter voltage of Q60 and Q61 increases and the current flowing through the base of Q61 decreases; thus the collector voltage rises. When this voltage exceeds the emitter voltage of Q62 (about 1.8V) plus V_{BE} (about 0.6V), the current flows through the base of Q62 and the collector voltage drops. ALC time constants C and R are connected to this collector.

The collector voltage change is shifted by Q64 and D68 (3.6V), and matched with the voltage for keying by Q65 and D69 to generate the ALC voltage. This ALC voltage activates ALC by lowering the second gate voltage of Q24 of the TX-RX unit (Fig. 7).

CIRCUIT DESCRIPTION

4-2. Power control circuit

Power is controlled by lowering the base voltage of Q61 in the TX-RX unit. As the base voltage of Q61 decreases, the emitter voltage of Q60 and Q61 decreases. This activates ALC and reduces the power even if the base voltage (VSF) of Q60 is low. The power change is shifted by D/A converter IC13 for changing base voltage of Q61 (Fig. 7).

4-3. Protection circuit

When the reflected wave voltage (VSR) detected by the filter unit rises, Q63 in TX-RX unit turns on to reduce the voltage of the ALC time constant line. The drive is decreased and the power is reduced to protect the final transistor.

4-4. Temperature protection

If the final heat sink temperature rises, Q9 in the final unit turns on and the fan starts running at low speed and during transmission Q10 turns on and starts running a high speed if the final heat sink temperature rises further.

If this is not enough to prevent the temperature from continuing to rise, the control unit CPU IC5 temperature detection port THP becomes "H", forcibly lowering the RF output. Also, if there are any fan troubles or if something happens to get entangled and prevents the fan from turning, the RF output is similarly forced down to prevent overheating.

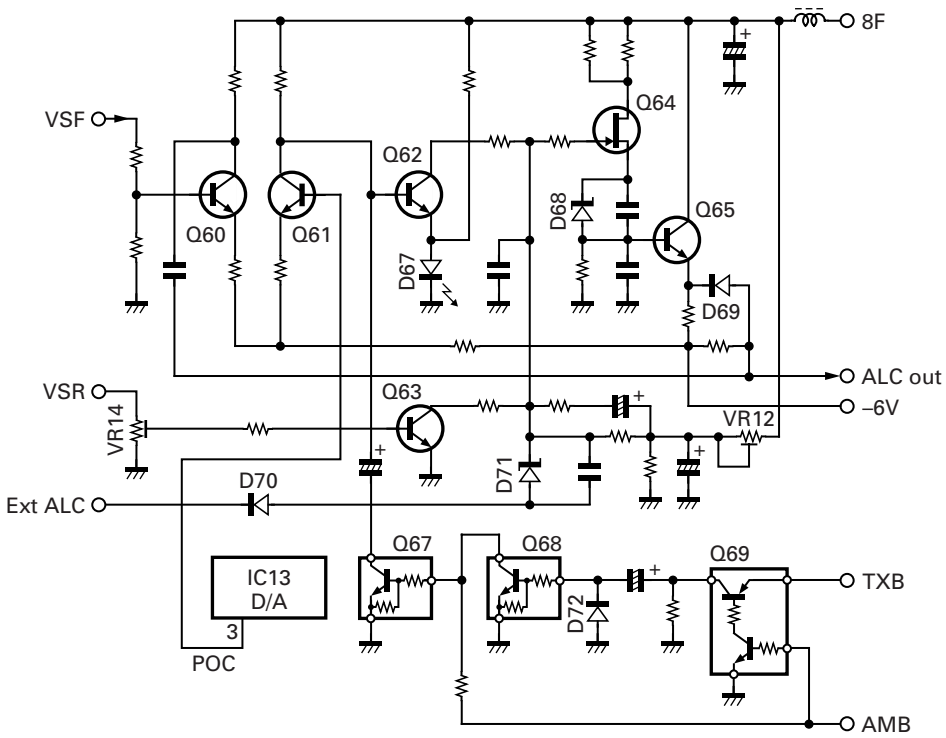

Fig. 7 ALC and power control circuits

5. Digital Control Circuit

The TK-80's digital control circuit comprises a 16-bit microcomputer CPU IC5, a reset IC3, an EEPROM IC6. Expander I/O IC7 since there are many control signals for TX-RX unit and filter unit, they are output to the shift register (serial to parallel converter) in series (Fig. 8).

5-1. Power switch

With this transceiver, the power is turned on and off by the microcomputer. When the power switch is pressed, the microcomputer detects it and energizes, the power relay to supply 14V to the transceiver. When the power switch is pressed to turn the transceiver off, the microcomputer checks it a little longer than when turning the power on and de-energizes the power relay.

CIRCUIT DESCRIPTION

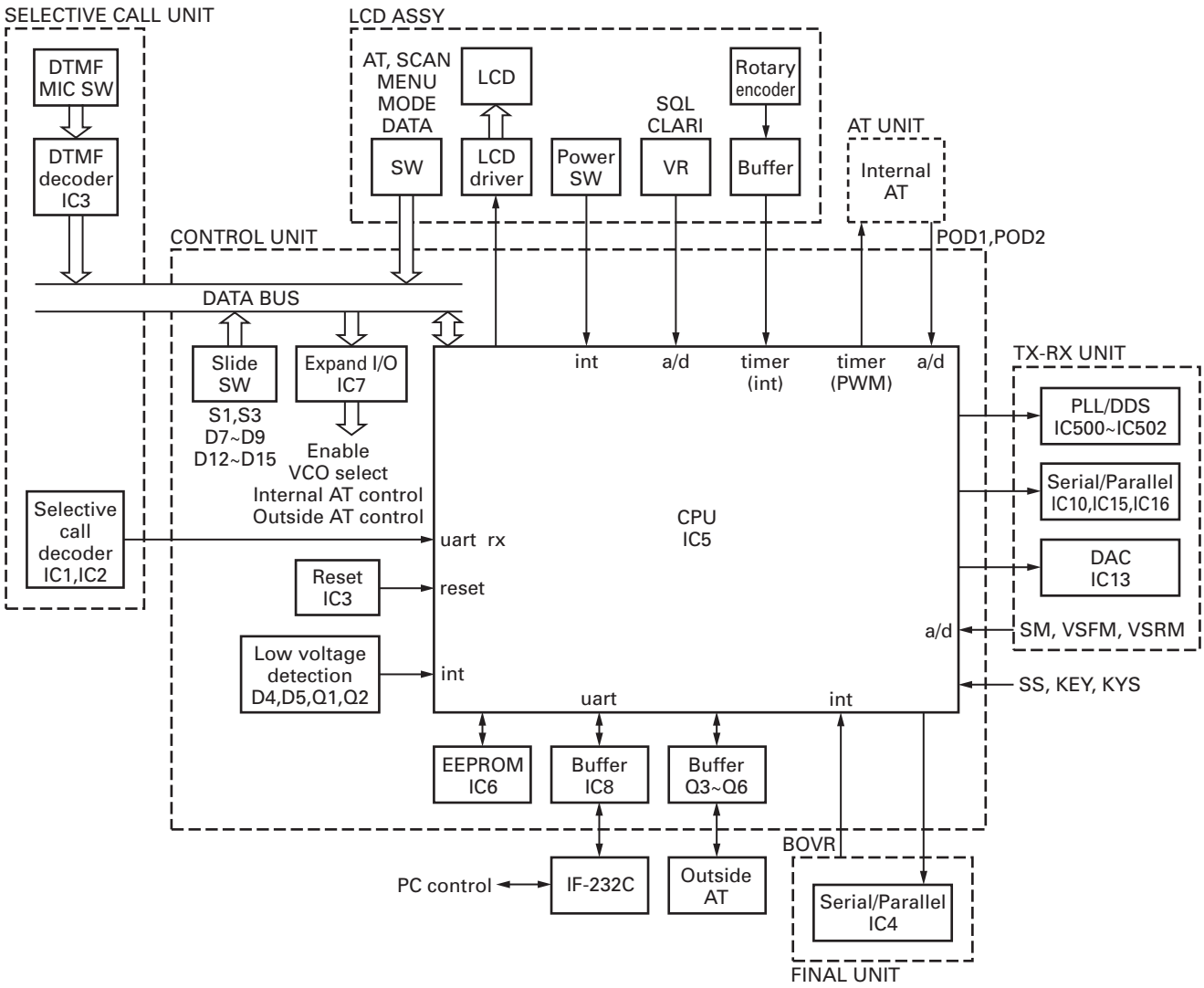

Fig. 8 Control block diagram

5-2. Reset circuit

IC3 monitors Vcc applied to the microcomputer. If the voltage falls below 2.15V, the IC outputs a reset signal ("L") to the microcomputer and the CPU initializes all internal data (including memory channel No. 11 to 80). The reset signal is not output when the power is turned on or off or 14V is turned on or off. It is output when the battery voltage level goes low and 14V is turned on or off.

C34 generates the signal width (td) required to reset the microcomputer (Fig. 9).

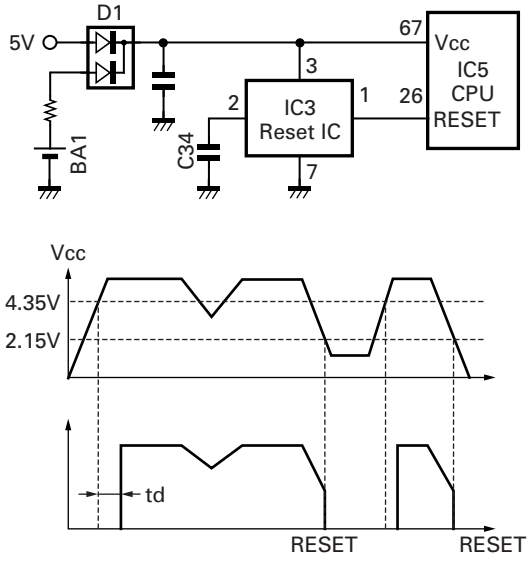

Fig. 9 Reset circuit

CIRCUIT DESCRIPTION

5-3. Backup circuit

This transceiver has two kinds of data stored in the microcomputer and EEPROM. Setting value of user and dealer menu data, such as memory channel data No. 01 to 80, is stored in the microcomputer, and memory channel data No. 01 to 10 for adjustment data, is stored in the EEPROM. To backup the CPU a power supply is needed. If 14V is cut off, power is supplied from a lithium battery. To retain data with the lithium battery, the microcomputer must be in backup mode. So, the backup detection circuit detects a voltage drop in the 14V line and outputs a backup request signal to the microcomputer (Fig. 10).

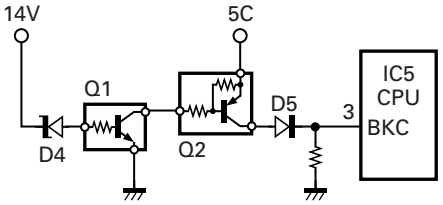

Fig. 10 Backup detection circuit

5-4. EEPROM

Adjustment data and memory channel No. 01 to 10 stored in the EEPROM, which consists of 256 16-bit registers. Data can be written to and read from the EEPROM. Each time the power is switched on, data is read from the EEPROM. If corrupt data is detected, the default adjustment data is used and memory channel is cleared. Adjustment data can be written into the EEPROM in servicing mode.

Memory channel is written by dealer mode (Fig. 11).

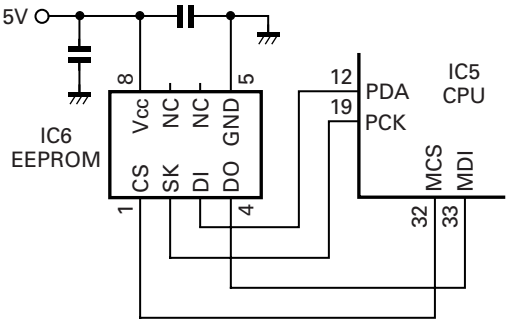

Fig. 11 EEPROM circuit

5-5. Busy signal

The level of the port is monitored in receive mode, and busy indication and busy stop are performed during scan.

5-6. Encoder circuit

The encoder is a mechanical one. The waveforms of the encoder pulses are rectified by IC1 and IC2 in the LCD assembly, and the number of pulses is counted by the hardware counter in the microcomputer (Fig. 12).

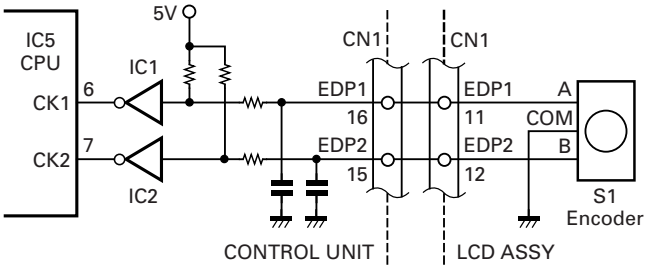

Fig. 12 Encoder circuit

5-7. Serial interface

The CPU has a synchronous serial interface built in, enabling serial communication at the TTL level.

The TK-80 can use this serial port for control via an external personal computer or for transmission of data among two transceiver units.

The data format is: TTL level, 8 data bit length, 1 stop bit, no parity, 9600 bps transmission speed (Fig. 13).

5-8. Key scan

The key scan consists of the six elements S0 and K0 to K4.

When the panel switch is pressed, the K0 to K4 port becomes "L" level and detection can be done by software.

Also, through the dealer menu settings, software can be used to set actuation enable/disable for each of the switches "SCAN", "MENU", "MODE" and "DATA".

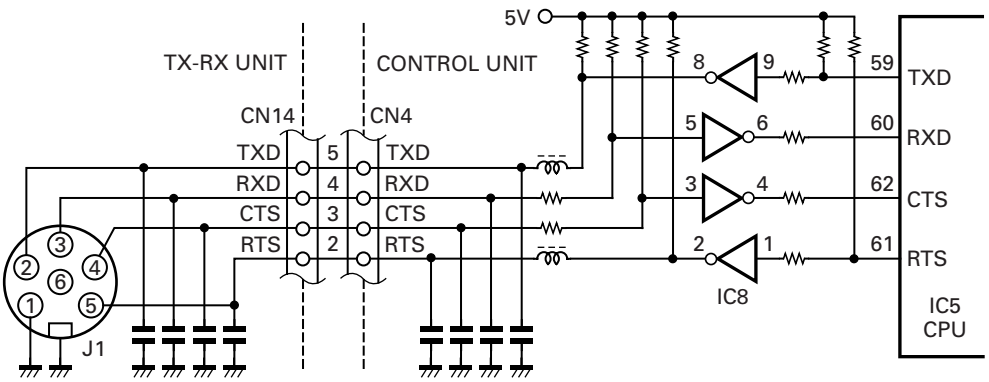

Fig. 13 Serial interface

CIRCUIT DESCRIPTION

5-9. Beep

The beep signal is generated using the timer in the microcomputer. A dot lasts about 40ms, a dash about 120ms. The oscillation frequency is about 1.4kHz.

5-10. PLL and DDS control circuit

The TK-80 has one PLL and two DDSs. The main microcomputer outputs frequency data to the PLL and DDSs serially according to the display frequency.

5-11. TX-RX unit control signal circuit

The microcomputer sends the mode signal, IF filter select signal, power signal, band-pass filter signal, MIC gain, and CAR level data to the TX-RX unit. It receives meter signals and standby switch signals from the TX-RX unit, displays data on the meters, and performs the transmit operation. The output signal from the microcomputer goes to the serial-to-parallel converter IC16, IC15 and IC10, D/A converter IC13 (Fig. 14).

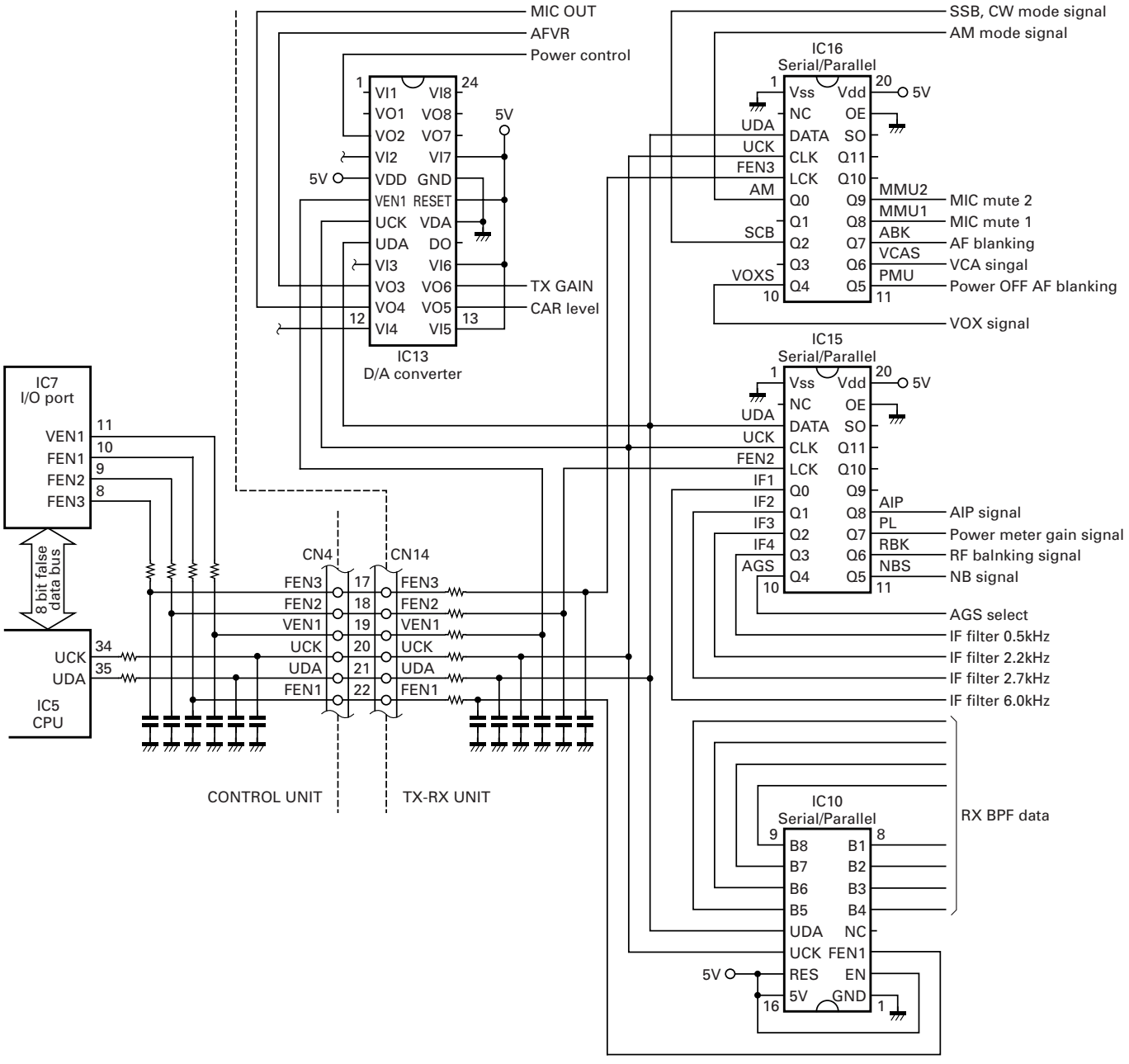

Fig. 14 TX-RX unit control signal

CIRCUIT DESCRIPTION

5-12. Final unit control signal

The transmission LPF section signal and KAT-2 control signal to the final unit are output as serial data (Fig. 15).

5-13. AT unit control signal

Concerning the preset AT, based on the KAT-2 installation signal (ATI), variable condenser position data (POD1, POD2) and preset position data, the CPU controls the variable condenser drive motor rotation direction and rotation speed, using feedback control to ensure it stops at preset positions. The tap signal from the tuning circuit is synthesized from the transmit LPF selection signal from the final unit.

The KAT-2 does not tune below 2.0MHz, forcibly entering the AT-through mode (Fig. 16).

The MAT-100 control signal is bi-directional and conducts tuning while handshaking with the MAT-100 (Fig. 17).

5-14. Selective call unit control signal

Based on the KPE-1 installation signal, DTMF decode data, FSK decode data and other data, the CPU transmits call codes, turns AF muting on and off, etc.

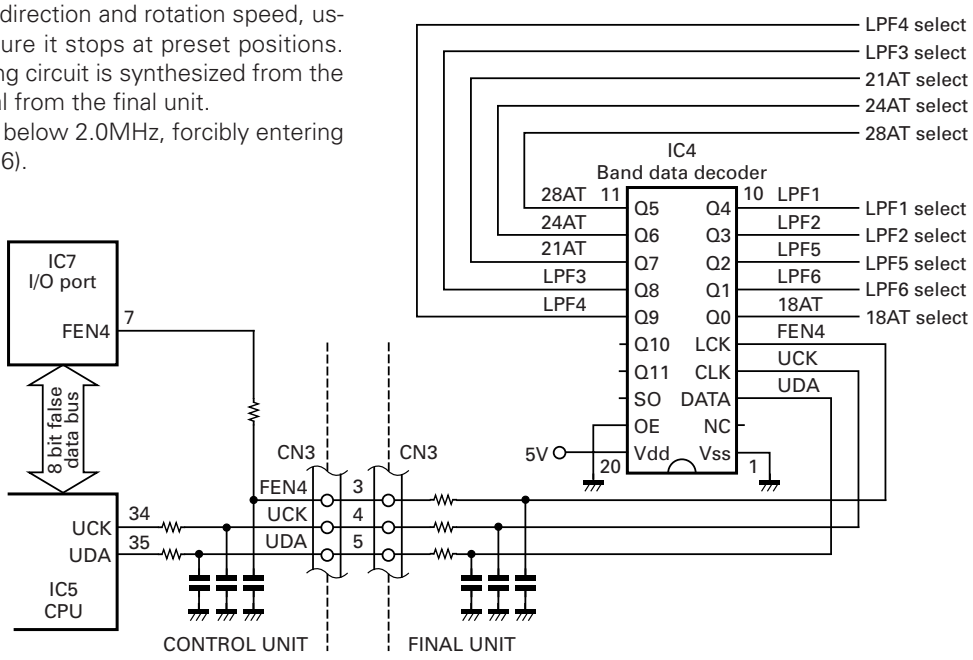

Fig. 15 Final unit control signal

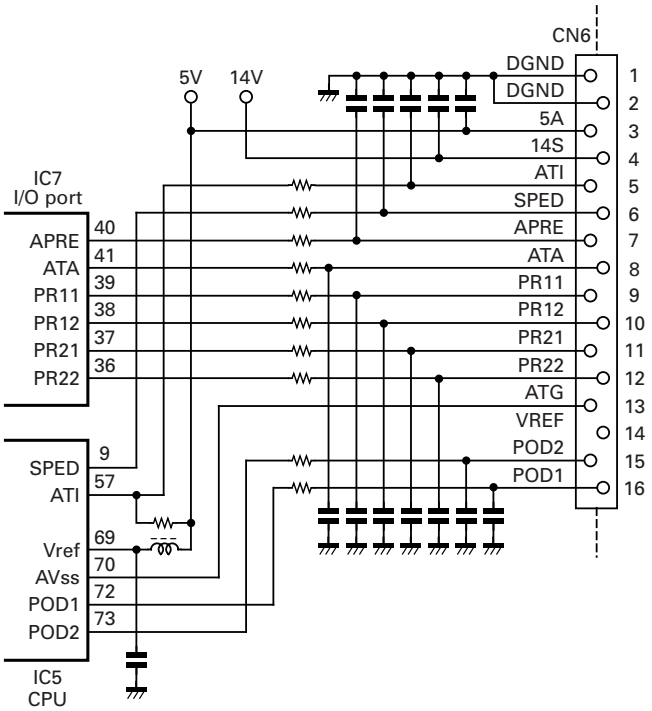

Fig. 16 KAT-2 control circuit

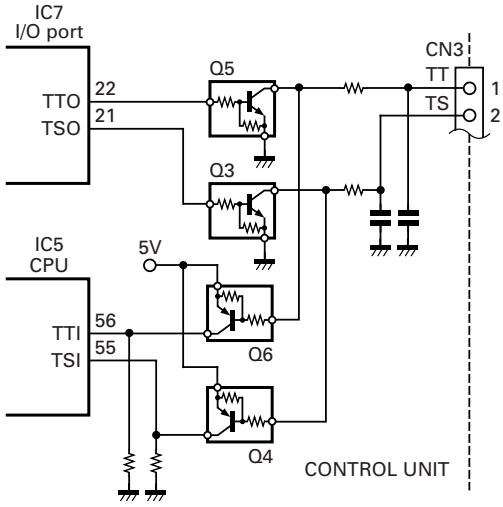

Fig. 17 MAT-100 conrol circuit

SEMICONDUCTOR DATA

Microprocessor: 37702E8LHJMHF (Control unit IC5)

Pin No.	Pin Name	Port Name	I/O	Description
1	FSL	P66	I	Selective call lock detect input. H: Detect, L: Normal
2	PSC	P65	O	Power relay control. H: ON, L: OFF
3	BKC	INT2	I	Reduced voltage input. H: Normal, L: Reduced voltage, Rise pulse: Power supply turned on
4	BOVR	INT1	I	Excess voltage input. H: Normal, L: Excess voltage
5	PSW	INT0	I	Power SW input. H: Input, L: No input
6	CK1	TA4in	I	Encoder input 1
7	CK2	TA4out	I	Encoder input 2
8	MU	P56	I	Microphone UP key input. H: No input, L: Input
9	SPED	TA3out	O	AT motor drive control. H: Go, L: Stop
10	MD	P55	I	Microphone DWN key input. H: No input, L: Input
11	SIDE	TA2out	O	Sidetone (timer output)
12	PDA	P53	O	PLL serial data, EEPROM serial data, diode matrix selection
13	BZ	TA1out	O	System beep (timer output)
14	LDA	P51	O	LCD driver serial data
15	LCK	P50	O	LCD driver serial clock
16	ULK	P47	I	PLL lock decision. H: Lock, L: Unlock
17	TOE	P46	O	DTMF IC bus control. H: Enable, L: HighZ
			I	Selective call unit attachment decision. H: Not attached, L: Attached
18	STD	P45	I	DTMF input decision. H: Input, L: No input
19	PCK	P44	O	For PLL/DDS, serial clock
20	SO	P43	O	Key matrix selection. H (HighZ): Normal, L: Select
21	LBLK	P42	O	LCD all illuminate. H: All illuminate, L: Normal
22	TXC	P41	O	Transmission control. H: TX, L: Non-TX
23	RXC	P40	O	Receiver control. H: RX, L: Non-RX
24	BYTE	BYTE	I	(External bus width designated)
25	CNVss	CNVss	I	CPU actuation mode designated
26	RESET	RESET	I	CPU reset
27	XIN	XIN	I	System clock
28	XOUT	XOUT	O	System clock
29	E	E	O	Not used
30	Vss	Vss	-	GND
31	CKY	P33	O	Transmission control CKY output. H: Transmission (carrier output), L: Reception
32	MCS	P32	O	EEPROM CS. H: CS
33	MDI	P31	I	EEPROM data read
34	UCK	P30	O	Common serial clock
35	UDA	P27	O	Common serial data
36	CASL	P26	O	Carrier DDS register selection. H: Register B, L: Register A
37	NC	P25	I	Not used
38	A1	P24	O	Expansion I/O address
39	A0	P23	O	Expansion I/O address
40	IOS	P22	O	Expansion I/O CS signal, H: Normal, L: CS

SEMICONDUCTOR DATA

Pin No.	Pin Name	Port Name	I/O	Description
41	RD	P21	O	Expansion I/O RD signal. H: Normal, L: RD
42	WR	P20	O	Expansion I/O WR signal. H: Normal, L: WR
43~50	D7~D0	P17~P10	O	False data path
51	BSY	P07	O	Packet busy output. H: Busy, L: Normal
52	KEY	P06	I	Key input. H: No input, L: Input
53	KYS	P05	I	Key plug attachment decision. H: Attached, L: Not attached
54	ODEN	P04	O	Expansion I/O reset output. H: Reset, L: Normal
55	TSI	P03	I	External AT control input
56	TTI	P02	I	External AT control input
57	ATI	P01	I	Internal AT attachment decision. H: Not attached, L: Attached
58	THP	P00	I	Power down request during temperature protection. H: Protection actuation, L: Normal
59	TXD	TXD1	O	Uart data output
60	RXD	RXD1	I	Uart data input
61	RTS	P85	O	Uart reception authorization output. H: Reception not allowed, L: Reception allowed
62	CTS	CTS1	I	Uart transmission authorization output. H: Transmission not allowed, L: Transmission allowed
63	ABSL	TXD0	O	Selective call code transmission uart data output
		P83	O	Local DDS, PLL register selection. H: Register B, latch V1, L: Register A, latch V2
64	FSD	RXD0	I	Selective call uart data input
65	P81	P81	I	GND
66	CTS0	CTS0	I	Selective call transmission authorization input. H: Transmission not allowed, L: Transmission allowed
67	Vcc	Vcc	I	Power supply
68	AVcc	AVcc	I	A/D power supply
69	Vref	Vref	I	A/D reference power supply
70	AVss	AVss	I	A/D GND
71	Vss	Vss	I	GND
72	POD1	AN7	I	Variable condenser 1 VR, A/D input
73	POD2	AN6	I	Variable condenser 2 VR, A/D input
74	VSRM	AN5	I	Reflection wave voltage, A/D input
75	VCL	AN4	I	Clarifier VR, A/D input
76	VSQL	AN3	I	Squelch VR, A/D input
77	VSFM	AN2	I	RF meter voltage (progression wave voltage), A/D input
78	SM	AN1	I	S-meter voltage, A/D input
79	VDLY	AN0	I	VOX delay VR, A/D input
80	SS	P67	I	Send switch input. H: No input, L: Input

I/O Port: UPD71055GB-3B4 (Control unit IC7)

Pin No.	Pin Name	Port Name	I/O	Description
1	NC	NC	-	Not used
2	CS	$\overline{CS}$	I	Chip select input
3	GND	GND	I	GND

SEMICONDUCTOR DATA

Pin No.	Pin Name	Port Name	I/O	Description
4	A1	A1	I	Port address 1
5	A0	A0	I	Port address 0
6	NC	P27	-	Not used
7	FEN4	P26	O	Serial parallel enable, final unit IC4
8	FEN3	P25	O	Serial parallel enable, TX-RX unit IC16
9	FEN2	P24	O	Serial parallel enable, TX-RX unit IC15
10	FEN1	P20	O	Serial parallel enable, TX-RX unit IC10
11	VEN1	P21	O	D/A enable, TX-RX unit IC13
12	LEN1	P22	O	LCD driver enable, LCD ASSY IC1
13	DEN2	P23	O	DDS enable, TX-RX unit IC501
14	DEN1	P10	O	DDS enable, TX-RX unit IC500
15	PLS	P11	O	FSK key select. H: FSK key, L: Selective call key
16	PEN1	P12	O	PLL enable, TX-RX unit IC502
17	NC	NC	-	Not used
18	VB3	P13	O	VCO select. H: 21.5MHz≤f, L: Other
19	VB2	P14	O	VCO select. H: 10.5MHz≤f<21.5MHz, L: Other
20	VB1	P15	O	VCO select. H: f<10.5MHz, L: Other
21	TSO	P16	O	External AT control output
22	TTO	P17	O	External AT control output
23	Vcc	Vcc	I	Power supply
24~31	D7~D0	D7~D0	I	Data 7~0
32	RES	RESET	I	Reset input
33,34	NC	NC	-	Not used
35	WR	$\overline{WR}$	I	Write control input
36	PR22	P07	O	Motor 2 rotation direction control
37	PR21	P06	O	Motor 2 rotation direction control
38	PR12	P05	O	Motor 1 rotation direction control
39	PR11	P04	O	Motor 1 rotation direction control
40	APRE	P03	O	Internal AT setting. H: Microprocessor, L: Analog circuit
41	ATA	P02	O	Internal AT setting. H: Line input, L: Cut away
42,43	NC	P01,P00	O	Not used
44	RD	$\overline{RD}$	I	Readout control input

I/O Port Expansion: UPD6345GS (TX-RX unit IC10)

Pin No.	Pin Name	Port Name	Description
5	B4	O8	RX band select 4. ON: 4.5MHz≤f<8.0MHz, OFF: Other
6	B3	O7	RX band select 3. ON: 2.5MHz≤f<4.5MHz, OFF: Other
7	B2	O6	RX band select 2. ON: 1.605MHz≤f<2.5MHz, OFF: Other
8	B1	O5	RX band select 1. ON: f<1.605MHz, OFF: Other
9	B8	O4	RX band select 8. ON: 21.5MHz≤f, OFF: Other

SEMICONDUCTOR DATA

Pin No.	Pin Name	Port Name	Description
10	B7	O3	RX band select 7. ON: 14.5MHz≤f<21.5MHz, OFF: Other
11	B6	O2	RX band select 6. ON: 10.5MHz≤f<14.5MHz, OFF: Other
12	B5	O1	RX band select 5. ON: 8.0MHz≤f<10.5MHz, OFF: Other

I/O Port Expansion: BU2099FV (TX-RX unit IC15)

Pin No.	Pin Name	Port Name	Description
6	IF1	Q0	IF filter selection. ON: 6.0kHz selection, OFF: Other
7	IF2	Q1	IF filter selection. ON: 2.7kHz selection, OFF: Other (option)
8	IF3	Q2	IF filter selection. ON: 2.2kHz selection, OFF: Other
9	IF4	Q3	IF filter selection. ON: 0.5kHz selection, OFF: Other (option)
10	AGS	Q4	Selection of constant during AGC. ON: AGC fast, OFF: AGC slow
11	NBS	Q5	NB setting. ON: NB off, OFF: NB on
12	RBK	Q6	RF blanking. ON: RBK on, OFF: RBK off
13	PL	Q7	VSFM, VSRM op-amp gain selection. ON: Low gain, OFF: High gain
14	AIP	Q8	AIP setting. ON: AIP on, OFF: AIP off

I/O Port Expansion: BU2099FV (TX-RX unit IC16)

Pin No.	Pin Name	Port Name	Description
6	AM	Q0	Mode selection. ON: During AM mode, OFF: Other
7	SSB	Q1	Mode selection. ON: During SSB mode, OFF: Other
8	SCB	Q2	Mode selection. ON: During SSB mode or CW mode, OFF: Other
9	NC	Q3	Not used (usually ON)
10	VOXS	Q4	VOX setting. ON: VOX on, OFF: VOX off
11	PMU	Q5	AF blanking during power supply OFF. ON: ABK on, OFF: ABK off
12	VCAS	Q6	VCA selection. ON: VR, OFF: D/A
13	ABK	Q7	AF blanking. ON: ABK on, OFF: ABK off
14	MMU1	Q8	Microphone mute 1 (input side). ON: Normal, OFF: During microphone mute
15	MMU2	Q9	Microphone mute 2 (output side). ON: During microphone mute, OFF: Normal

Band Data Decoder: BU2099FV (Final unit IC4)

Pin No.	Pin Name	Port Name	Description
6	18AT	Q0	Selected for 18AT. ON: 14.5MHz≤f<19.0MHz, OFF: Other
7	LPF6	Q1	Selected for LPF6. ON: 21.5MHz≤f, OFF: Other
8	LPF5	Q2	Selected for LPF5. ON: 14.5MHz≤f<21.5MHz, OFF: Other
9	LPF2	Q3	Selected for LPF2/4AT. ON: 2.4MHz≤f<4.5MHz, OFF: Other
10	LPF1	Q4	Selected for LPF1. ON: f<2.4MHz, OFF: Other
11	28AT	Q5	Selected for 28AT. ON: 27.0MHz≤f, OFF: Other
12	24AT	Q6	Selected for 24AT. ON: 22.0MHz≤f<27.0MHz, OFf: Other
13	21AT	Q7	Selected for 21AT. ON: 19.0MHz≤f<22.0MHz, OFF: Other
14	LPF3	Q8	Selected for LPF3/7AT. ON: 4.5MHz≤f<8.0MHz, OFF: Other
15	LPF4	Q9	Selected for LPF4/14AT. ON: 8.0MHz≤f<14.5MHz, OFF: Other

SEMICONDUCTOR DATA

D/A Converter: M62363FP (TX-RX unit IC13)

Pin No.	Pin Name	Port Name	Description
1,2	NC	VI1,VO1	Not used
3	POC	VO2	Power control
4	(5V)	VI2	Created from 14V at zener and resistive division
9	RAF	VI3	AF reference voltage
10	AFC	VO3	AF voltage (VCA control voltage)
11	MICOUT	VO4	Microphone output (audio), microphone gain
12	MICIN	VI4	Microphone input (audio)
13	(5V)	VI5	Vdd common
14	CAR	VO5	CAR level
15	TGC	VO6	TX gain control
16	(5V)	VI6	Vdd common
21	(5V)	VI7	Vdd common

■ M62363FP Block diagram

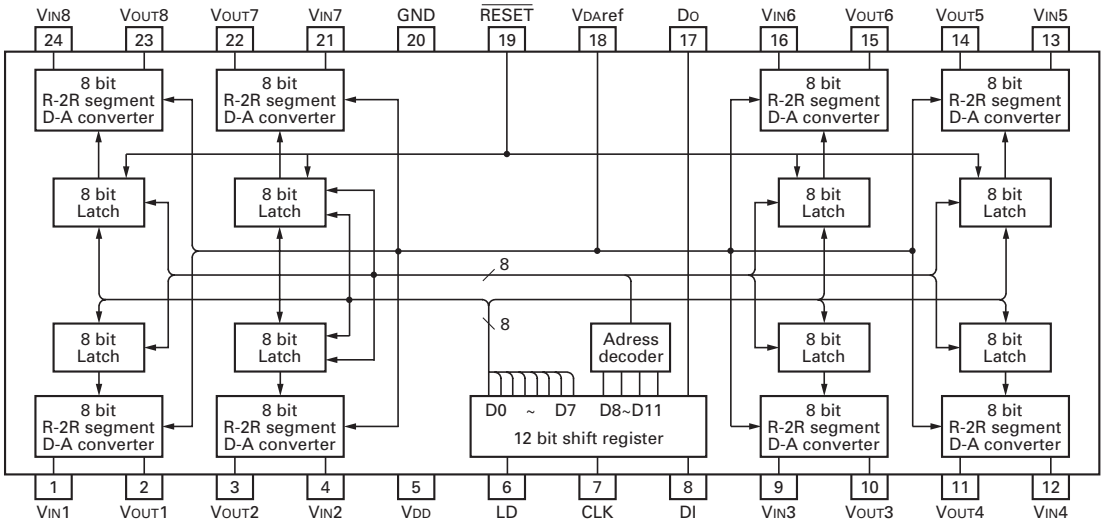

Balanced Modulation: NJM2594V (TX-RX unit IC4)

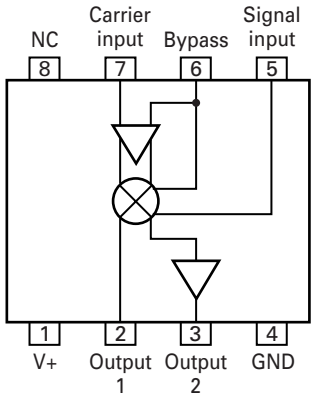

COMPONENTS DESCRIPTION

FINAL UNIT (X45-3520-21)

Ref. No.	Use / Function	Operation / Condition
IC1	Comparator	Fan control
IC2	Regulator	14V→5V
IC3	Regulator	14V→8V
IC4	Band data decoder	Serial to parallel conversion
Q1	Pre-drive amplifier	HF band wide band amplification
Q2,3	Drive amplifier	HF band push-pull wide band amplification
Q4	Final bias supply	Final temperature compensation
Q5,6	Final amplifier	HF band push-pull wide band amplification
Q7	Relay drive	The relay is energized when power is turned on
Q8	Switching transistor	On when over voltage occurs
Q9,10	Fan motor drive	Runs the fan during transmission or when the temperature rises
Q12	Switching transistor	Off when the control circuit is troubled
Q13	Signal switch	Transmit/Receive changeover relay drive
Q14~21	Signal switch	Low pass filter changeover relay drive
D1	Temperature compensation	Pre-drive temperature detection
D2	Temperature compensation	Drive temperature detection
D3,4	Temperature compensation	Final temperature detection
D5	Protection diode	Reverse power connection
D6	Zener diode	Over voltage detection
D7	Relay surge absorption	Relay counter voltage bypass
D8	Protection diode	Fan counter voltage bypass
D9	Switching	OR circuit
D10,11	RF detection	SWR power detection
D12	Relay surge absorption	Transmit/Receive changeover relay
D13	Spike surge absorption	Surge absorber
D14	Switching	OR circuit
D15	Surge voltage absorption	14V line
D701~706	Relay surge absorption	LPF relay counter voltage bypass

CONTROL UNIT (X53-3570-21)

Ref. No.	Use / Function	Operation / Condition
IC1,2	Inverter	Encoder shape wave
IC3	Reset	
IC4	Regulator	Constant voltage 6V output
IC5	CPU	Microprocessor
IC6	EEPROM	4k bits
IC7	I/O port	8 bit x 3, 24 ports
IC8	Buffer	Buffer of serial interface
Q1,2	Signal switch	Backup judgment
Q3,4	Signal switch	On during AT tune
Q5,6	Signal switch	On during AT through
Q7	Signal switch	Off in AF mute
D1	Switching (reverse flow prevention)	CPU power supply OR circuit
D2	Reverse flow prevention	
D3	Switching	Standby switch OR circuit
D4	Zener diode	Backup detection (voltage shift)
D5,6	Reverse flow prevention	
D7,10~13	Switching	Destination selection
D14	Zener diode	AF mute detection (voltage shift)
D15	Switching	Destination selection
D16~18	Reverse flow prevention	Key matrix judgment

TX-RX UNIT (X57-4660-21)

Ref. No.	Use / Function	Operation / Condition
IC1	Switching	Analog switch
IC2	Amplifier	S-meter level amplification
IC3	Switching	Analog switch
IC4	Balanced modulation	SSB AM modulation
IC6	Electrical volume	

COMPONENTS DESCRIPTION

Ref. No.	Use / Function	Operation / Condition
IC7	Audio amplifier	Audio power amplification
IC8	Switching	Analog switch
IC9	MIC amplifier	Amplification for MIC input
IC10	I/O port expansion	Serial to parallel conversion
IC11	Regulator	8V→5V
IC12	Amplifier	SWR power amplification
IC13	D/A converter	Level control
IC14	Amplifier	CAR, TGC voltage amplification
IC15,16	I/O port expansion	Serial to parallel conversion
IC500,501	DDS	
IC502	PLL	2,3,4: Divide ratio setting input, 5: Register select, 6: 19.5~49.5MHz, 9: Lock voltage output, 11: Unlock output, 15: 20MHz input
IC503	Mixer	2: 19.5~49.5MHz output, 5: 73.145~103.045MHz input, 7: 53.545~54.045MHz input
IC504	Mixer	2: 8.305~8.805MHz output, 5: 1.195~1.695MHz input, 7: 10MHz input
IC505	Mixer	2: 62.35MHz input, 5: 53.545~54.045MHz output, 8: 8.305~8.805MHz input
IC506	Mixer	3: 10.695MHz output, 5: 0.695MHz input, 7: 10MHz input
IC508	Switching	Analog switch
IC900	Amplifier	VOX, ANTI VOX amplifier
IC901	NOR circuit	VOX level comparator
Q1	Switching	TX: ON, RX: OFF
Q2,3	Switching	TX: OFF, RX: ON
Q4~7	RX 1st mixer	IF: 73.045MHz, RF: 100kHz~30MHz, LO1: 73.145~103.045MHz
Q8,9	RF amplifier	AIP OFF: ON
Q10	IF amplifier	Amplification for IF frequency 73.045MHz
Q11,12	RX 2nd mixer	IF1: 73.045MHz, LO2: 62.35MHz, IF2: 10.695MHz
Q13	Amplifier	LO1 amplification
Q14	Switching	AIP ON: ON
Q15	Switching	AIP ON/OFF select switch

Ref. No.	Use / Function	Operation / Condition
Q17	Switching	AIP OFF: ON
Q18	Amplifier	Buffer amplifier for NB noise amplifier
Q19	Amplifier	IF2 amplification
Q20	Switching	For NB
Q21	Amplifier	10.695MHz amplification for receive
Q22	Switching	CKY H: ON
Q23	DC LPF	ALC keying
Q24	Amplifier	10.695MHz amplification for transmit
Q25,26	TX 1st mixer	LO2: 62.35MHz, IN: 10.695MHz, OUT: 73.045MHz
Q27,28	TX 2nd mixer	LO1: 73.145~103.045MHz, IN: 73.045MHz, OUT: 100kHz~30MHz
Q29	Amplifier	Drive amplifier for transmit
Q30,31	Amplifier	IF amplifier for receive
Q32	Amplifier	AF buffer amplifier for SSB, CW
Q33	RX IF buffer amplifier	AM detection, AGC
Q34	Amplifier	AF buffer amplifier for AM
Q35	Amplifier	AGC amplifier
Q36,38	Switching	ON in receive
Q39	Amplifier	AF amplifier for packet communication
Q40	Amplifier	AF amplifier for selective call
Q46	Switching	ON when BUSY is Hi
Q47	Switching	VCA volume selection
Q48	Amplifier	AF preamplifier
Q49	Switching	AF mute
Q50	Amplifier	Buffer for input to balanced modulator
Q51	Amplifier	Amplifier for balanced modulator output
Q52	Switching	ON in CW mode (MIC mute)
Q54	Amplifier	Detection for MIC amplifier output
Q55~57	Switching	DC/DC converter
Q58	Switching	Linear amplifier control
Q59	Ripple filter	Power supply for AF amplifier
Q60~62	Amplifier	ALC amplifier
Q63	Amplifier	SWR protection
Q64,65	Amplifier	ALC amplifier
Q67	Switching	ON in AM mode, OFF while transmitting in AM mode
Q68,69	Switching	ON while transmitting in AM mode
Q70,71	Switching	ON when TXC is Hi

COMPONENTS DESCRIPTION

Ref. No.	Use / Function	Operation / Condition
Q72	Switching	TXB/RXB select switch
Q74	Switching	ON when TXB is Low
Q75	Switching	ON in AF mute
Q76	Switching	ON when power switch is OFF
Q77	Switching	AF mute/AM mode: ON
Q78	Switching	SSB/CW: ON
Q79	Amplifier	Amplification for sidetone
Q80,81	Switching	ON when PSK is Low
Q82,83	Switching	ON in low power or AT tune
Q507	Amplifier	LO1 (73.145~103.045MHz) output
Q508~510	LPF	Active LPF
Q511	Amplifier	19.5~49.5MHz PLL (IC502) input
Q512	Buffer amplifier	19.5~49.5MHz
Q513	Buffer amplifier	73.145~103.045MHz mixer (IC503) input
Q514	Buffer amplifier	D/A buffer, 1.195~1.695MHz mixer (IC504) input
Q515	Buffer amplifier	8.305~8.805MHz mixer (IC505) input
Q516	Buffer amplifier	10MHz mixer (IC504) input
Q517	Crystal OSC	62.35MHz
Q518	Buffer amplifier	62.35MHz
Q519	Buffer amplifier	62.35MHz mixer (IC505) input
Q520	Buffer amplifier	LO2 (62.35MHz) output
Q521	Amplifier	LO2 (62.35MHz) output
Q522	Buffer amplifier	D/A buffer, 0.695MHz mixer (IC506) input
Q523	Buffer amplifier	10MHz mixer (IC506) input
Q524	Amplifier	CAR (10.695MHz) output
Q525	Crystal OSC	20MHz
Q526	Buffer amplifier	20MHz
Q527	Buffer amplifier	20MHz PLL (IC502) input
Q528	Buffer amplifier	20MHz
Q529	Amplifier	20MHz DDS (IC500,501) input
Q530	Switching	VCO1 selection
Q531	VCO1	73.145~83.544MHz
Q532	Switching	VCO2 selection
Q533	VCO2	83.545~94.544MHz
Q534	Switching	VCO3 selection
Q535	VCO3	94.545~103.045MHz

Ref. No.	Use / Function	Operation / Condition
Q536	Buffer amplifier	VCO output 73.145~103.045MHz
Q800	Switching	NB ON/OFF
Q801,802	Amplifier	NB amplifier
Q803	Amplifier	AGC for NB
Q804	Amplifier	NB amplifier
Q805	Switching	NB amplifier
Q806	Buffer amplifier	NB amplifier
Q807,808	Switching	NB amplifier
Q900	VOX amplifier	MIC amplifier
Q901	Switching	ON when IC901 10 pin is Hi
Q902	Switching	VOX ON/OFF
Q903	Switching	VOX input ON/OFF
D1~4	Lightning surge absorption	
D5,6	Switching	ON in receive, OFF in transmit
D7,8	Switching	ON in 100kHz~1.60499MHz
D9,10	Switching	ON in 1.605MHz~2.49999MHz
D11,12	Switching	ON in 2.500MHz~4.49999MHz
D13,14	Switching	ON in 4.500MHz~7.99999MHz
D15,16	Switching	ON in 8.000MHz~10.49999MHz
D17,18	Switching	ON in 10.500MHz~14.49999MHz
D19,20	Switching	ON in 14.500MHz~21.49999MHz
D21,22	Switching	ON in 21.500MHz~29.99999MHz
D23,24	Switching	ON when AIP is ON
D25,26	Switching	ON when AIP is OFF
D27	Switching	ON when MMU1 is ON
D28	Switching	ON when packet using
D29	Switching	AGC time constant
D30	Switching	Switch for sending LO1 to the transmit or receive mixer
D31	Switching	Switch for sending LO2 to the transmit or receive mixer
D32	Switching	10.695MHz filter select switch
D33	Switching	ON in transmit
D34	Switching	Transmit or receive selection
D35	Switching	ON in receive
D36~43	Switching	10.695MHz filter select switch
D44	Reverse flow prevention	

COMPONENTS DESCRIPTION

Ref. No.	Use / Function	Operation / Condition
D45	LED	Voltage limiter
D47	Reverse flow prevention	
D48	PIN diode	Diode of 10.695MHz level variability
D49	Reverse flow prevention	
D50,51	Switching	ON in transmit
D52,53	Detection	SSB, CW envelope detection
D54	Detection	AM envelope detection
D55	Detection	AGC squelch detection
D56	Switching	ON in transmit
D59	Detection	Detection of MIC amplifier output
D60,61,63	Reverse flow prevention	
D64	Rectification	DC/DC converter
D65	Zener diode	For constant voltage
D66	Surge absorption	Protect for transistor of linear amplifier control
D67	LED	Voltage limiting
D68	Zener diode	3.6V voltage shift
D69,70	Reverse flow prevention	

Ref. No.	Use / Function	Operation / Condition
D71	Zener diode	12V voltage shift
D72,73	Reverse flow prevention	
D75	Zener diode	Reduce the output power when power supply voltage drop
D76,79	Reverse flow prevention	
D80	Zener diode	Reduce the output power when power supply voltage drop
D81~87	Reverse flow prevention	
D88	Zener diode	Over voltage protection
D500,501	Switching	DDS register selection
D502	Vari-cap	VCO1
D503	Switching	VCO1 output
D504	Vari-cap	VCO2
D505	Switching	VCO2 output
D506	Vari-cap	VCO3
D507	Switching	VCO3 output
D800	Detection	Noise detection
D900~902	Reverse flow prevention	

PARTS LIST

✻ New Parts. ⚠ indicates safety critical components.
Parts without **Parts No.** are not supplied.
Les articles non mentionnes dans le **Parts No.** ne sont pas fournis.
Teile ohne **Parts No.** werden nicht geliefert.

L : Scandinavia **K** : USA **P** : Canada
Y : PX (Far East, Hawaii) **T** : England **E** : Europe
Y : AAFES (Europe) **X** : Australia **M** : Other Areas

TK-80 (Y52-3210-21)
FINAL UNIT (X45-3520-21)

Ref. No.	Address	New parts	Parts No.	Description	Destination
TK-80					
1	1A		A01-2099-02	METALLIC CABINET (UPSIDE)	
2	3B		A01-2100-02	METALLIC CABINET (BOTTOM)	
3	2A	✻	A62-0668-03	PANEL ASSY	
6	2A	✻	B38-0739-15	LCD ASSY	
7	1D	✻	B62-1012-00	INSTRUCTION MANUAL	
8	2B	✻	B72-1493-04	MODEL NAME-PLATE	
10	1B		E04-0167-05	RF COAXIAL RECEPTACLE (M)	
12	1B		E23-0992-04	EARTH LUG	
13	1C		E30-3157-15	DC CORD ACCESSORY	
14	1B,3B		E37-0225-05	LEAD WIRE WITH MINIPIN PLUG (R)	
15	1B,3B		E37-0497-05	LEAD WIRE WITH MINIPIN PLUG (B)	
16	2A,2B		E37-0499-05	FLAT CABLE (X57CN14-X53CN4)	
17	1B,2B		E37-0500-05	FLAT CABLE (X45CN3-X53CN3)	
18	1B,3B		E37-0501-05	FLAT CABLE (X45CN10-X57CN15)	
19	2A,2B		E37-0503-05	LEAD WIRE WITH CONNECTOR (PHONE)	
20	2A,3B		E37-0505-05	LEAD WIRE WITH CONNECTOR (MIC)	
21	3A,2B		E37-0508-05	LEAD WIRE WITH CONNECTOR (SP)	
22	1B,2B		E37-0509-05	LEAD WIRE WITH CONNECTOR (AT)	
24	1C		F05-2531-05	FUSE (BLADE TYPE) (25A/32V)	
25	1B,1C		F06-4027-05	FUSE (BLADE TYPE) (4A/32V)	
26	1A		F09-0438-15	FANMOTOR	
27	2A		F20-0521-04	INSULATING BOARD (BATTERY)	
-			F29-0014-05	INSULATING BUSH (Q1)	
30	1B		G02-0575-04	FLAT SPRING (TX-RX IC7)	
31	1B		G02-0732-14	FLAT SPRING (FINAL IC2,3)	
-			G09-0405-05	KNOB SPRING (MAIN DIAL)	
32	1A		G10-0676-04	FIBROUS SHEET (UPSIDE CASE)	
23	1A,2A,3B	✻	G10-1275-04	FIBROUS SHEET (UPSIDE CASE)	
33	2A		G13-1515-04	CUSHION (SUB PANEL)	
-			G13-1549-04	CUSHION (PANEL)	
28	2A	✻	G13-1846-04	CUSHION (SUB PANEL)	
29	2B	✻	G13-1848-04	CUSHION (CONTROL)	
36	2C		H10-2787-02	POLYSTYRENE FOAMED FIXTURE (F)	
37	1D		H10-2788-02	POLYSTYRENE FOAMED FIXTURE (R)	
38	2C		H13-0962-04	CARTON BOARD	
35	3D	✻	H52-1272-02	ITEM CARTON CASE	
45	3B		J02-0475-05	FOOT	
46	2B		J19-1458-05	HOLDER	
47	1A	✻	J21-4438-14	MOUNTING HARDWARE (FAN)	
48	2A		J31-0141-04	COLLAR (MIC 8P)	
51	2A,3A		K29-4973-04	KNOB (VOL,SQL,CLA)	
50	3A	✻	K29-5080-13	KNOB (MAIN DIAL)	
B	2A	✻	N10-2070-46	HEXAGON NUT (ENCODER)	
A	2B		N15-1040-46	FLAT WASHER	
C	2A		N32-3006-46	FLAT HEAD MACHINE SCREW	
D	1A,3A		N33-3006-45	OVAL HEAD MACHINE SCREW	
E	1A		N35-3018-46	BINDING HEAD MACHINE SCREW	
F	2B		N35-4010-46	BINDING HEAD MACHINE SCREW	
G	3A		N67-3005-46	PAN HEAD SEMS SCREW	
H	1B		N68-3008-46	PAN HEAD SEMS SCREW	
J	1B,3B		N87-3006-46	BRAZIER HEAD TAPTITE SCREW	
K	1B		N87-3008-46	BRAZIER HEAD TAPTITE SCREW	
M	2A		N90-2605-45	TP HEAD MACHINE SCREW	
N	3B		N91-3010-46	TP HEAD TAPPING SCREW	
55	3A		T07-0325-05	SPEAKER	
56	1C	✻	T91-0562-25	MICROPHONE ACCESSORY	
60	2A		W09-0515-05	LITHIUM CELL	

Ref. No.	Address	New parts	Parts No.	Description			Destination
FINAL UNIT (X45-3520-21)							
C1			CK73FB1E103K	CHIP C	0.010UF	K	
C2			CK73FB1H102K	CHIP C	1000PF	K	
C3			CK73FB1E104K	CHIP C	0.10UF	K	
C4			CC73FSL1H821J	CHIP C	820PF	J	
C5			CK73FB1E103K	CHIP C	0.010UF	K	
C6			CK73FB1E104K	CHIP C	0.10UF	K	
C7			CK73FB1H102K	CHIP C	1000PF	K	
C8			CK73FB1E104K	CHIP C	0.10UF	K	
C9			CK73FB1H102K	CHIP C	1000PF	K	
C10			CK73FB1E104K	CHIP C	0.10UF	K	
C11			CE04EW1C100M	ELECTRO	10UF	16WV	
C12			CK73FB1E104K	CHIP C	0.10UF	K	
C13,14			CK73FB1E103K	CHIP C	0.010UF	K	
C15			CK73FB1H102K	CHIP C	1000PF	K	
C16			C90-2193-05	ELECTRO	39UF	25WV	
C17			CE04EW1C100M	ELECTRO	10UF	16WV	
C18		✻	CC45FSL2H221JN	CERAMIC	220PF	J	
C19,20			CK73FB1E104K	CHIP C	0.10UF	K	
C21			CK73FB1H472K	CHIP C	4700PF	K	
C22			CM73F2H102J	CHIP C	1000PF	J	
C23			CK73FB1E104K	CHIP C	0.10UF	K	
C24,25			C91-1004-05	CHIP C	6800PF	J	
C26			CK73FB1H102K	CHIP C	1000PF	K	
C27			CM73F2H561J	CHIP C	560PF	J	
C28			CK73FB1E104K	CHIP C	0.10UF	K	
C29			CM73F2H122J	CHIP C	1200PF	J	
C30		✻	CC45FSL2H151JN	CERAMIC	150PF	J	
C31			CK73FB1E104K	CHIP C	0.10UF	K	
C32			C90-2194-05	ELECTRO	220UF	25WV	
C33,34			CK73FB1E103K	CHIP C	0.010UF	K	
C35			CE04EW1E471M	ELECTRO	470UF	25WV	
C36			CK73FB1E103K	CHIP C	0.010UF	K	
C37			CK73FB1E104K	CHIP C	0.10UF	K	
C38			CK73FB1E103K	CHIP C	0.010UF	K	
C39			CK73FB1H102K	CHIP C	1000PF	K	
C40-43			CK73FB1E104K	CHIP C	0.10UF	K	
C44			CK73FB1E103K	CHIP C	0.010UF	K	
C45,46			CE04EW1E100M	ELECTRO	10UF	25WV	
C47			CE04EW1E102M	ELECTRO	1000UF	25WV	
C48			CK73FB1E104K	CHIP C	0.10UF	K	
C49,50			CE04EW1E100M	ELECTRO	10UF	25WV	
C51,52			CK73FB1E104K	CHIP C	0.10UF	K	
C53,54			CK73FB1E103K	CHIP C	0.010UF	K	
C55			CC73FSL1H221J	CHIP C	220PF	J	
C56			CC73FCH1H101J	CHIP C	100PF	J	

PARTS LIST

FINAL UNIT (X45-3520-21)

Ref. No.	Address	New parts	Parts No.	Description	Destination
C57		✻	CC45FCH2H030CN	CERAMIC 3.0PF C	
C58			CC73FCH1H560J	CHIP C 56PF J	
C59			CK73FB1E103K	CHIP C 0.010UF K	
C60			CC73FSL1H221J	CHIP C 220PF J	
C62			CK73FB1E104K	CHIP C 0.10UF K	
C63			CC73FCH1H680J	CHIP C 68PF J	
C64			CC73FCH1H121J	CHIP C 120PF J	
C65			CC73FCH1H560J	CHIP C 56PF J	
C66-74			CK73FB1H102K	CHIP C 1000PF K	
C75			CK73FB1E103K	CHIP C 0.010UF K	
C76			CK73FB1E104K	CHIP C 0.10UF K	
C77			CE04EW1E102M	ELECTRO 1000UF 25WV	
C78			CK73FB1E104K	CHIP C 0.10UF K	
C79-81			CK73FB1H102K	CHIP C 1000PF K	
C84			CK73FB1E103K	CHIP C 0.010UF K	
C85-87			CK73FB1H102K	CHIP C 1000PF K	
C88, 89			C91-2691-05	CERAMIC 470PF 250WV	
C101			CM93D2H821J	MICA 820PF J	
C102			CC45FSL2H471JN	CERAMIC 470PF J	
C103			CM93D2H182J	MICA 1800PF J	
C104		✻	CC45FSL2H151JN	CERAMIC 150PF J	
C105			CM93D2H821J	MICA 820PF J	
C201		✻	CC45FSL2H561J	CERAMIC 560PF J	
C202			CC45FSL2H331JN	CERAMIC 330PF J	
C203		✻	CC45FSL2H391JN	CERAMIC 390PF J	
C204		✻	CC45FSL2H121JN	CERAMIC 120PF J	
C205		✻	CC45FSL2H151JN	CERAMIC 150PF J	
C206		✻	CC45FSL2H121JN	CERAMIC 120PF J	
C207			CC45FSL2H471JN	CERAMIC 470PF J	
C208		✻	CC45FSL2H151JN	CERAMIC 150PF J	
C301		✻	CC45FSL2H271JN	CERAMIC 270PF J	
C302		✻	CC45FSL2H151JN	CERAMIC 150PF J	
C303		✻	CC45FSL2H271JN	CERAMIC 270PF J	
C304		✻	CC45FSL2H560JN	CERAMIC 56PF J	
C305		✻	CC45FSL2H271JN	CERAMIC 270PF J	
C307		✻	CC45FSL2H221JN	CERAMIC 220PF J	
C401			CC45FSL2H181JN	CERAMIC 180PF J	
C402		✻	CC45FSL2H470JN	CERAMIC 47PF J	
C403			CC45FSL2H331JN	CERAMIC 330PF J	
C404		✻	CC45FSL2H121JN	CERAMIC 120PF J	
C405		✻	CC45FSL2H151JN	CERAMIC 150PF J	
C501		✻	CC45FSL2H121JN	CERAMIC 120PF J	
C502		✻	CC45FSL2H150JN	CERAMIC 15PF J	
C503		✻	CC45FSL2H221JN	CERAMIC 220PF J	
C504		✻	CC45FSL2H470JN	CERAMIC 47PF J	
C505		✻	CC45FSL2H101JN	CERAMIC 100PF J	
C601			CC45FSL2H680JN	CERAMIC 68PF J	
C602		✻	CC45FSL2H120JN	CERAMIC 12PF J	
C603		✻	CC45FSL2H121JN	CERAMIC 120PF J	
C604		✻	CC45FSL2H470JN	CERAMIC 47PF J	
C605			CC45FSL2H680JN	CERAMIC 68PF J	
C607		✻	CC45FSL2H100DN	CERAMIC 10PF D	
C701-706			CK73FB1H103K	CHIP C 0.010UF K	
TC1			C05-0030-15	CERAMIC TRIMMER CAPACITOR (20PF)	
CN1			E04-0191-05	PIN SOCKET	
CN2			E40-3246-05	PIN ASSY	
CN3			E40-5764-05	FLAT CABLE CONNECTOR	
CN4			E40-3249-05	PIN ASSY	
CN5,6			E04-0154-05	PIN SOCKET	

Ref. No.	Address	New parts	Parts No.	Description	Destination
CN7			E04-0191-05	PIN SOCKET	
CN9			E23-0996-05	TEST TERMINAL	
CN10			E40-5765-05	FLAT CABLE CONNECTOR	
CN11			E40-3252-05	PIN ASSY	
CN101			E23-0996-05	TEST TERMINAL	
CN104			E23-0996-05	TEST TERMINAL	
CN800			E40-3238-05	PIN ASSY	
J800			E11-0431-05	PHONE JACK(11P)	
W1			E37-0493-05	LEAD WIRE WITH CONNECTOR (DC CABLE)	
W2			E37-0445-05	PROCESSED LEAD WIRE (ANT)	
F1			F06-5023-05	FUSE (5A/125V)	
F2			F06-4027-05	FUSE (BLADE TYPE) (4A/32V)	
A1,2			J13-0410-05	FUSE HOLDER (F2)	
L1			L40-3985-48	SMALL FIXED INDUCTOR (390NH)	
L2		✻	L41-1015-32	SMALL FIXED INDUCTOR (100UH)	
L3		✻	L41-3395-32	SMALL FIXED INDUCTOR (3.3UH)	
L4			L39-0481-05	TOROIDAL COIL	
L5-7			L33-0699-05	CHOKE COIL	
L8			L39-1257-05	TOROIDAL COIL	
L9			L40-4795-48	SMALL FIXED INDUCTOR (4.7UH)	
L10			L33-0617-15	CHOKE COIL	
L11,12			L33-0699-05	CHOKE COIL	
L13			L39-0480-15	TOROIDAL COIL	
L14			L33-0617-15	CHOKE COIL	
L15			L33-0651-05	CHOKE COIL	
L16			L39-1252-15	TOROIDAL COIL	
L17			L40-2221-33	SMALL FIXED INDUCTOR (22MH)	
L18			L39-0480-15	TOROIDAL COIL	
L19			L40-2221-33	SMALL FIXED INDUCTOR (22MH)	
L20,21			L40-2782-15	SMALL FIXED INDUCTOR (270NH)	
L22,23		✻	L41-1005-32	SMALL FIXED INDUCTOR (10UH)	
L24			L40-1001-12	SMALL FIXED INDUCTOR (10UH)	
L101			L39-1259-05	TOROIDAL COIL	
L102			L39-1260-05	TOROIDAL COIL	
L201			L39-1224-05	TOROIDAL COIL	
L202			L39-1225-05	TOROIDAL COIL	
L301			L39-1266-05	TOROIDAL COIL	
L302			L39-1258-05	TOROIDAL COIL	
L401			L39-1221-05	TOROIDAL COIL	
L402			L39-1220-05	TOROIDAL COIL	
L501			L34-1279-05	AIR-CORE COIL	
L502			L34-1280-05	AIR-CORE COIL	
L601			L34-1281-05	AIR-CORE COIL	
L602			L34-1282-05	AIR-CORE COIL	
L701-706		✻	L41-1015-32	SMALL FIXED INDUCTOR (100UH)	
R1			RK73FB2A331J	CHIP R 330 J 1/10W	
R2			RK73FB2A681J	CHIP R 680 J 1/10W	
R3			RK73FB2A101J	CHIP R 100 J 1/10W	
R4			RK73FB2A6R8J	CHIP R 6.8 J 1/10W	
R5			R92-1221-05	CHIP R 82 J 1/4W	
R6			RK73FB2A6R8J	CHIP R 6.8 J 1/10W	
R7			R92-1242-05	CHIP R 6.8 J 1/4W	
R8			R92-1243-05	CHIP R 8.2 J 1/4W	
R9			RK73FB2A331J	CHIP R 330 J 1/10W	
R10			R92-1318-05	CHIP R 100 J 1W	
R11,12			R92-0696-05	CHIP R 33 J 1/4W	
R13			R92-1318-05	CHIP R 100 J 1W	
R14-17			RS14CB3A5R6J	FL-PROOF RS 5.6 J 1W	

PARTS LIST

FINAL UNIT (X45-3520-21)
CONTROL UNIT (X53-3570-21)

Ref. No.	Address	New parts	Parts No.	Description			Destination
R18			RK73FB2A391J	CHIP R	390	J 1/10W	
R19,20			RS14CB3A150J	FL-PROOF RS	15	J 1W	
R21,22			RS14CB3A4R7J	FL-PROOF RS	4.7	J 1W	
R23,24			R92-1317-05	CHIP R	18	J 1W	
R26			RK73FB2A474J	CHIP R	470K	J 1/10W	
R27			RK73FB2A562J	CHIP R	5.6K	J 1/10W	
R28			RK73FB2A272J	CHIP R	2.7K	J 1/10W	
R29			RK73FB2A562J	CHIP R	5.6K	J 1/10W	
R30			RK73FB2A102J	CHIP R	1.0K	J 1/10W	
R32			RK73FB2A562J	CHIP R	5.6K	J 1/10W	
R33			RK73FB2A681J	CHIP R	680	J 1/10W	
R34			RK73FB2A562J	CHIP R	5.6K	J 1/10W	
R35			RK73FB2A103J	CHIP R	10K	J 1/10W	
R36			RK73FB2A222J	CHIP R	2.2K	J 1/10W	
R37			RK73FB2A4R7J	CHIP R	4.7	J 1/10W	
R38			R92-0696-05	CHIP R	33	J 1/4W	
R39			R92-1244-05	CHIP R	27	J 1/4W	
R40-43			RK73FB2A101J	CHIP R	100	J 1/10W	
R101			R92-1061-05	JUMPER REST	0 OHM		
R800,801			R92-1204-05	CHIP R	100	J 1/4W	
VR1			R12-6730-05	TRIMMING POT. (220)			
VR2			R12-6737-05	TRIMMING POT. (3.3K)			
VR3			R12-6730-05	TRIMMING POT. (220)			
K1			S76-0414-05	RELAY			
K2			S51-1429-05	RELAY			
K101,102			S51-1420-05	RELAY			
K201,202			S51-1420-05	RELAY			
K301,302			S51-1420-05	RELAY			
K401,402			S51-1420-05	RELAY			
K501,502			S51-1420-05	RELAY			
K601,602			S51-1420-05	RELAY			
D1			MA27T-B	VARISTOR			
D2-4			MA27-B	VARISTOR			
D5			SG-5L(R)	DIODE			
D6			02CZ18(X)	ZENER DIODE			
D7,8			LFB01	DIODE			
D9			DAN202K	DIODE			
D10,11			1SS101	DIODE			
D12			LFB01	DIODE			
D13			DSA301LA	DIODE			
D14			DAN202K	DIODE			
D15		✻	ERZV10D220	SURGE ABSORBER			
D701-706			LFB01	DIODE			
IC1			NJM2904M	MOS-IC			
IC2			UPC7805H	BI-POLAR IC			
IC3			UPC7808H	MOS-IC			
IC4			BU2099FV	MOS-IC			
Q1	1B	✻	2SC1971-B	TRANSISTOR			
Q2,3	1B	✻	2SC3133-B	TRANSISTOR			
Q4	1B		2SC3421(Y)	TRANSISTOR			
Q5,6	1B		2SC2879A(O,Y)	TRANSISTOR			
Q7			DTC143TK	DIGITAL TRANSISTOR			
Q8			DTC114EK	DIGITAL TRANSISTOR			
Q9			DTD123EK	DIGITAL TRANSISTOR			
Q12			DTC124TK	DIGITAL TRANSISTOR			
Q13			FMC2	DIGITAL TRANSISTOR			
Q14			FMA5	TRANSISTOR			
Q15,16		✻	FMA7A	TRANSISTOR			
Q17,18			FMA5	TRANSISTOR			
Q19-21			DTB143EK	DIGITAL TRANSISTOR			
TH1			10KD-5	THERMISTOR			
-			212-1021-05	INSULATING TUBE			

CONTROL UNIT (X53-3570-21)

Ref. No.	Address	New parts	Parts No.	Description			Destination
C1-6			CK73GB1H102K	CHIP C	1000PF	K	
C7,8			CC73GCH1H101J	CHIP C	100PF	J	
C9-19			CK73GB1H102K	CHIP C	1000PF	K	
C20,21			CK73GF1E104Z	CHIP C	0.10UF	Z	
C22			C92-0009-05	CHIP-TAN	4.7UF	10WV	
C23			CK73GF1E104Z	CHIP C	0.10UF	Z	
C24,25			CK73GB1H102K	CHIP C	1000PF	K	
C26			C92-0009-05	CHIP-TAN	4.7UF	10WV	
C27-32			CK73GB1H102K	CHIP C	1000PF	K	
C33			CK73FF1C105Z	CHIP C	1.0UF	Z	
C34			CK73GF1E104Z	CHIP C	0.10UF	Z	
C35			CK73GB1E223K	CHIP C	0.022UF	K	
C36			CK73GB1H103K	CHIP C	0.010UF	K	
C37			C92-0009-05	CHIP-TAN	4.7UF	10WV	
C38,39			CK73GB1H102K	CHIP C	1000PF	K	
C40-44			CK73GF1E104Z	CHIP C	0.10UF	Z	
C45			CK73GB1H102K	CHIP C	1000PF	K	
C46,47			CK73GF1E104Z	CHIP C	0.10UF	Z	
C48-52			CK73GB1H102K	CHIP C	1000PF	K	
C53			CK73FF1C105Z	CHIP C	1.0UF	Z	
C54			CK73GF1E104Z	CHIP C	0.10UF	Z	
C55,56			CC73GCH1H330J	CHIP C	33PF	J	
C57-69			CK73GB1H102K	CHIP C	1000PF	K	
C70			CK73GB1H103K	CHIP C	0.010UF	K	
C72-74			CK73GB1H102K	CHIP C	1000PF	K	
C75-79			CK73GB1H103K	CHIP C	0.010UF	K	
C80			CK73GB1H102K	CHIP C	1000PF	K	
C81			CK73GB1H103K	CHIP C	0.010UF	K	
C82			CK73GB1H102K	CHIP C	1000PF	K	
C84			CK73GB1H103K	CHIP C	0.010UF	K	
C85-87			CK73GB1H102K	CHIP C	1000PF	K	
C88-93			CK73GB1H103K	CHIP C	0.010UF	K	
C94,95			CK73GF1E104Z	CHIP C	0.10UF	Z	
C96-103			CK73GB1H102K	CHIP C	1000PF	K	
C104-106			CK73GB1H103K	CHIP C	0.010UF	K	
C107			CK73GF1E104Z	CHIP C	0.10UF	Z	
C108			CK73GB1H103K	CHIP C	0.010UF	K	
C110			CK73GB1H102K	CHIP C	1000PF	K	
C111			CK73GB1H103K	CHIP C	0.010UF	K	
CN1			E40-5736-05	FLAT CABLE CONNECTOR			
CN2			E40-5758-05	FLAT CABLE CONNECTOR			
CN3			E40-5762-05	FLAT CABLE CONNECTOR			
CN4			E40-5761-05	FLAT CABLE CONNECTOR			
CN5			E40-5762-05	FLAT CABLE CONNECTOR			
CN6			E40-5381-05	FLAT CABLE CONNECTOR			
L1-4			L40-1801-18	SMALL FIXED INDUCTOR (18UH)			
L5,6			L40-4705-48	SMALL FIXED INDUCTOR (47UH)			
L7-9			L40-1801-18	SMALL FIXED INDUCTOR (18UH)			
L10			L40-4705-48	SMALL FIXED INDUCTOR (47UH)			
X1			L77-1624-05	CRYSTAL RESONATOR (7.3728MHZ)			
R1-3			RK73GB1J471J	CHIP R	470	J 1/16W	

If a part reference number is listed in a shaded box, that part does not come with the PCB.

PARTS LIST

CONTROL UNIT (X53-3570-21)
TX-RX UNIT (X57-4660-21)

Ref. No.	Address	New parts	Parts No.	Description	Destination
R4-8			RK73GB1J221J	CHIP R 220 J 1/16W	
R9			RK73GB1J471J	CHIP R 470 J 1/16W	
R10,11			RK73GB1J221J	CHIP R 220 J 1/16W	
R12-19			RK73GB1J471J	CHIP R 470 J 1/16W	
R20-23			RK73GB1J103J	CHIP R 10K J 1/16W	
R24-31			RK73GB1J221J	CHIP R 220 J 1/16W	
R32			RK73GB1J103J	CHIP R 10K J 1/16W	
R35,36			RK73GB1J103J	CHIP R 10K J 1/16W	
R40			RK73GB1J103J	CHIP R 10K J 1/16W	
R41			RK73GB1J471J	CHIP R 470 J 1/16W	
R42			RK73GB1J103J	CHIP R 10K J 1/16W	
R43			RK73GB1J474J	CHIP R 470K J 1/16W	
R44			RK73GB1J103J	CHIP R 10K J 1/16W	
R45			RK73GB1J473J	CHIP R 47K J 1/16W	
R46-48			RK73GB1J103J	CHIP R 10K J 1/16W	
R49			RK73GB1J472J	CHIP R 4.7K J 1/16W	
R50,51			RK73GB1J471J	CHIP R 470 J 1/16W	
R52,53			RK73GB1J221J	CHIP R 220 J 1/16W	
R54			RK73GB1J471J	CHIP R 470 J 1/16W	
R55,56			RK73GB1J101J	CHIP R 100 J 1/16W	
R57			RK73GB1J105J	CHIP R 1.0M J 1/16W	
R58			RK73GB1J103J	CHIP R 10K J 1/16W	
R59,60			RK73GB1J104J	CHIP R 100K J 1/16W	
R61			RK73GB1J471J	CHIP R 470 J 1/16W	
R62,63			RK73GB1J221J	CHIP R 220 J 1/16W	
R64-72			RK73GB1J471J	CHIP R 470 J 1/16W	
R73			RK73GB1J223J	CHIP R 22K J 1/16W	
R74			R92-1252-05	CHIP R 0 OHM J 1/16W	
R75			RK73GB1J221J	CHIP R 220 J 1/16W	
R76,77			RK73GB1J471J	CHIP R 470 J 1/16W	
R78,79			RK73GB1J101J	CHIP R 100 J 1/16W	
R80,81			RK73GB1J472J	CHIP R 4.7K J 1/16W	
R82			RK73GB1J103J	CHIP R 10K J 1/16W	
R83-90			RK73GB1J473J	CHIP R 47K J 1/16W	
R92-94			RK73GB1J103J	CHIP R 10K J 1/16W	
R95			RK73GB1J102J	CHIP R 1.0K J 1/16W	
R99-101			RK73GB1J223J	CHIP R 22K J 1/16W	
R102-105			RK73GB1J103J	CHIP R 10K J 1/16W	
R106-117			RK73GB1J221J	CHIP R 220 J 1/16W	
R118			RK73GB1J471J	CHIP R 470 J 1/16W	
R119-121			RK73GB1J104J	CHIP R 100K J 1/16W	
R122-124			RK73GB1J221J	CHIP R 220 J 1/16W	
R125			RK73GB1J102J	CHIP R 1.0K J 1/16W	
R126-129			RK73GB1J221J	CHIP R 220 J 1/16W	
R130,131			RK73GB1J101J	CHIP R 100 J 1/16W	
R132,133			RK73GB1J473J	CHIP R 47K J 1/16W	
R134-137			RK73GB1J471J	CHIP R 470 J 1/16W	
R138-141			RK73GB1J102J	CHIP R 1.0K J 1/16W	
R142			RK73GB1J472J	CHIP R 4.7K J 1/16W	
R143			RK73GB1J471J	CHIP R 470 J 1/16W	
R144			RK73GB1J223J	CHIP R 22K J 1/16W	
R145			RK73GB1J103J	CHIP R 10K J 1/16W	
R146			RK73GB1J471J	CHIP R 470 J 1/16W	
R147			R92-1252-05	CHIP R 0 OHM J 1/16W	
R148			R92-0670-05	CHIP R 0 OHM	
R149			RK73GB1J103J	CHIP R 10K J 1/16W	
R150			RK73GB1J221J	CHIP R 220 J 1/16W	
S1			S62-0412-05	SLIDE SWITCH	
S3			S62-0412-05	SLIDE SWITCH	

Ref. No.	Address	New parts	Parts No.	Description	Destination
D1			1SS301	DIODE	
D2			1SS355	DIODE	
D3			DAP202U	DIODE	
D4			02CZ8.2(Y)	ZENER DIODE	
D5-10			1SS355	DIODE	
D11			1SS301	DIODE	
D12,13			1SS355	DIODE	
D14		✻	02CZ9.1(Z)	ZENER DIODE	
D15			1SS355	DIODE	
D16			IMN10	DIODE	
D17,18			1SS355	DIODE	
IC1,2			TC4S584F	MOS-IC	
IC3			M62003FP	MOS-IC	
IC4			TA78L06F	MOS-IC	
IC5		✻	37702E8LHJMHF	MICROCONTROLLER IC	
IC6		✻	AT93C66A10SU27	ROM IC	
IC7		✻	UPD71055GB-3B4	MOS-IC	
IC8			SN74ALS04BNS	MOS-IC	
Q1			DTC143TK	DIGITAL TRANSISTOR	
Q2			DTA143EK	DIGITAL TRANSISTOR	
Q3			DTC143EK	DIGITAL TRANSISTOR	
Q4			DTA143EK	DIGITAL TRANSISTOR	
Q5			DTC143EK	DIGITAL TRANSISTOR	
Q6			DTA143EK	DIGITAL TRANSISTOR	
Q7			DTC143EK	DIGITAL TRANSISTOR	

TX-RX UNIT (X57-4660-21)

D45			B30-2001-05	LED (RED)	
D67			B30-2001-05	LED (RED)	
C1			CC73GCH1H470J	CHIP C 47PF J	
C2			CC73FCH1H070D	CHIP C 7.0PF D	
C3			CC73GCH1H390J	CHIP C 39PF J	
C6			CK73EB1H104K	CHIP C 0.10UF K	
C7			CK73FB1H103K	CHIP C 0.010UF K	
C8			CK73FF1E104Z	CHIP C 0.10UF Z	
C9			CK73FF1C105Z	CHIP C 1.0UF Z	
C10			CE04EW1E4R7M	ELECTRO 4.7UF 25WV	
C11			CK73GB1H103K	CHIP C 0.010UF K	
C12			CK73FB1H182K	CHIP C 1800PF K	
C13			CK73FF1E104Z	CHIP C 0.10UF Z	
C14			CK73GB1H472K	CHIP C 4700PF K	
C15			CK73FB1H182K	CHIP C 1800PF K	
C16			CK73GB1H222K	CHIP C 2200PF K	
C17			CK73GB1H472K	CHIP C 4700PF K	
C18			CK73GB1H222K	CHIP C 2200PF K	
C19			CK73FB1E104K	CHIP C 0.10UF K	
C20			CK73GB1H103K	CHIP C 0.010UF K	
C21			CK73FF1C105Z	CHIP C 1.0UF Z	
C22			CK73GB1H392K	CHIP C 3900PF K	
C23			CK73FF1E104Z	CHIP C 0.10UF Z	
C24-26			CK73GB1H102K	CHIP C 1000PF K	
C27			CK73GB1H392K	CHIP C 3900PF K	
C28			CK73FF1E104Z	CHIP C 0.10UF Z	
C29			CK73GB1H182K	CHIP C 1800PF K	
C30			CK73FF1E104Z	CHIP C 0.10UF Z	
C31			CK73GB1H102K	CHIP C 1000PF K	
C32			CC73GCH1H391J	CHIP C 390PF J	
C33			CK73GB1H102K	CHIP C 1000PF K	

PARTS LIST

TX-RX UNIT (X57-4660-21)

Ref. No.	Address	New parts	Parts No.	Description	Destination
C34			CK73GB1H182K	CHIP C 1800PF K	
C35			CK73FF1E104Z	CHIP C 0.10UF Z	
C36			CK73GB1H102K	CHIP C 1000PF K	
C37			CK73FF1E104Z	CHIP C 0.10UF Z	
C38			CK73GB1H102K	CHIP C 1000PF K	
C39			CC73GCH1H271J	CHIP C 270PF J	
C40,41			CK73GB1H102K	CHIP C 1000PF K	
C42			CK73FF1E104Z	CHIP C 0.10UF Z	
C43			CK73GB1H821K	CHIP C 820PF K	
C44			CK73FF1E104Z	CHIP C 0.10UF Z	
C45			CK73GB1H102K	CHIP C 1000PF K	
C46			CC73GCH1H121J	CHIP C 120PF J	
C47			CK73GB1H102K	CHIP C 1000PF K	
C48			CK73GB1H821K	CHIP C 820PF K	
C49			CK73FF1E104Z	CHIP C 0.10UF Z	
C50			CK73GB1H681K	CHIP C 680PF K	
C51			CK73FF1E104Z	CHIP C 0.10UF Z	
C52			CK73GB1H102K	CHIP C 1000PF K	
C53			CC73GCH1H820J	CHIP C 82PF J	
C54			CK73GB1H102K	CHIP C 1000PF K	
C55			CK73GB1H681K	CHIP C 680PF K	
C56			CK73FF1E104Z	CHIP C 0.10UF Z	
C57			CC73GCH1H331J	CHIP C 330PF J	
C58			CK73FF1E104Z	CHIP C 0.10UF Z	
C59			CK73GB1H102K	CHIP C 1000PF K	
C60			CC73GCH1H680J	CHIP C 68PF J	
C61			CK73GB1H102K	CHIP C 1000PF K	
C62			CC73GCH1H331J	CHIP C 330PF J	
C63			CK73FF1E104Z	CHIP C 0.10UF Z	
C64			CC73GCH1H221J	CHIP C 220PF J	
C65			CK73FF1E104Z	CHIP C 0.10UF Z	
C66			CK73GB1H102K	CHIP C 1000PF K	
C67			CC73GCH1H470J	CHIP C 47PF J	
C68			CK73GB1H102K	CHIP C 1000PF K	
C69			CC73GCH1H221J	CHIP C 220PF J	
C70			CK73FF1E104Z	CHIP C 0.10UF Z	
C71			CC73GCH1H680J	CHIP C 68PF J	
C72			CC73GCH1H060D	CHIP C 6.0PF D	
C73			CC73FCH1H151J	CHIP C 150PF J	
C74			CC73GCH1H180J	CHIP C 18PF J	
C75			CC73GCH1H680J	CHIP C 68PF J	
C76,77			CK73FF1E104Z	CHIP C 0.10UF Z	
C78			CK73FB1H102K	CHIP C 1000PF K	
C79-81			CK73FF1E104Z	CHIP C 0.10UF Z	
C82			CK73FB1H471K	CHIP C 470PF K	
C83			CK73GB1H103K	CHIP C 0.010UF K	
C84			CC73FCH1H220J	CHIP C 22PF J	
C85			CK73FF1E104Z	CHIP C 0.10UF Z	
C86			CK73GB1C104K	CHIP C 0.10UF K	
C87			CK73FF1E104Z	CHIP C 0.10UF Z	
C88			CK73GB1H103K	CHIP C 0.010UF K	
C89-91			CK73FF1E104Z	CHIP C 0.10UF Z	
C92			CC73GCH1H020C	CHIP C 2.0PF C	
C93			CC73FCH1H030C	CHIP C 3.0PF C	
C94			CC73FCH1H010C	CHIP C 1.0PF C	
C95			CC73GCH1H100D	CHIP C 10PF D	
C96			CC73FCH1H101J	CHIP C 100PF J	
C97			CK73FF1E104Z	CHIP C 0.10UF Z	
C98,99			CK73GB1H103K	CHIP C 0.010UF K	
C100			CC73FCH1H010C	CHIP C 1.0PF C	

Ref. No.	Address	New parts	Parts No.	Description	Destination
C101			CC73FCH1H060D	CHIP C 6.0PF D	
C102-104			CK73GB1H103K	CHIP C 0.010UF K	
C105			CK73FB1H103K	CHIP C 0.010UF K	
C106			CK73FB1H471K	CHIP C 470PF K	
C107			CK73FB1H103K	CHIP C 0.010UF K	
C108			CK73GB1H103K	CHIP C 0.010UF K	
C109			CK73GB1H471K	CHIP C 470PF K	
C110			CK73GB1H103K	CHIP C 0.010UF K	
C111			CC73FCH1H270J	CHIP C 27PF J	
C112			CK73GB1H103K	CHIP C 0.010UF K	
C114			CK73GB1H102K	CHIP C 1000PF K	
C115			CK73FF1C105Z	CHIP C 1.0UF Z	
C116			CK73FB1H103K	CHIP C 0.010UF K	
C117			CC73GCH1H200J	CHIP C 20PF J	
C118			CK73GB1H103K	CHIP C 0.010UF K	
C119			CK73FB1H103K	CHIP C 0.010UF K	
C120			CC73GCH1H100D	CHIP C 10PF D	
C121			CC73GCH1H020C	CHIP C 2.0PF C	
C122-124			CK73GB1H103K	CHIP C 0.010UF K	
C125			CK73FB1H103K	CHIP C 0.010UF K	
C126			CK73FF1E104Z	CHIP C 0.10UF Z	
C127,128			CK73GB1H103K	CHIP C 0.010UF K	
C129			CK73FB1H103K	CHIP C 0.010UF K	
C130-133			CK73GB1H103K	CHIP C 0.010UF K	
C134			CK73FB1H103K	CHIP C 0.010UF K	
C135,136			CK73GB1H103K	CHIP C 0.010UF K	
C140-142			CC73GCH1H100D	CHIP C 10PF D	
C146,147			CK73FB1H103K	CHIP C 0.010UF K	
C148			CC73FCH1H040C	CHIP C 4.0PF C	
C149			CC73FCH1H200J	CHIP C 20PF J	
C151-154			CK73FB1H103K	CHIP C 0.010UF K	
C155			CC73FCH1H030C	CHIP C 3.0PF C	
C157-160			CK73FB1H103K	CHIP C 0.010UF K	
C161			CC73FCH1H030C	CHIP C 3.0PF C	
C163-166			CK73FB1H103K	CHIP C 0.010UF K	
C167			CC73FCH1H040C	CHIP C 4.0PF C	
C168			CC73FCH1H030C	CHIP C 3.0PF C	
C169,170			CK73FB1H103K	CHIP C 0.010UF K	
C171			CK73GB1H103K	CHIP C 0.010UF K	
C172			CK73FF1C474Z	CHIP C 0.47UF Z	
C173			CK73FF1E104Z	CHIP C 0.10UF Z	
C174			CK73GB1H103K	CHIP C 0.010UF K	
C175			CK73FF1E104Z	CHIP C 0.10UF Z	
C176			CK73GF1E473Z	CHIP C 0.047UF Z	
C177			CK73FB1H103K	CHIP C 0.010UF K	
C178-180			CK73GB1H103K	CHIP C 0.010UF K	
C181			CK73FB1H471K	CHIP C 470PF K	
C182-184			CK73GB1H103K	CHIP C 0.010UF K	
C185			CC73GCH1H050C	CHIP C 5.0PF C	
C186			CK73FB1H332K	CHIP C 3300PF K	
C187			CK73FB1H103K	CHIP C 0.010UF K	
C188			CC73GCH1H200J	CHIP C 20PF J	
C189,190			CK73GB1H103K	CHIP C 0.010UF K	
C191			CK73FB1H103K	CHIP C 0.010UF K	
C192			CK73GB1H103K	CHIP C 0.010UF K	
C193			CC73FUJ1H080D	CHIP C 8.0PF D	
C194,195			CK73FB1H103K	CHIP C 0.010UF K	
C196			CK73GB1H103K	CHIP C 0.010UF K	
C197			CC73FCH1H010C	CHIP C 1.0PF C	
C198			CK73FB1H103K	CHIP C 0.010UF K	

PARTS LIST

TX-RX UNIT (X57-4660-21)

Ref. No.	Address	New parts	Parts No.	Description			Destination
C199			CK73GB1H471K	CHIP C	470PF	K	
C201,202			CK73GB1H103K	CHIP C	0.010UF	K	
C203			CC73FUJ1H080D	CHIP C	8.0PF	D	
C204			CC73FCH1H010C	CHIP C	1.0PF	C	
C205			CC73FCH1H0R5C	CHIP C	0.5PF	C	
C206,207			CK73GB1H103K	CHIP C	0.010UF	K	
C208-210			CK73FF1E104Z	CHIP C	0.10UF	Z	
C211			CE04EW1C100M	ELECTRO	10UF	16WV	
C212-215			CK73FF1E104Z	CHIP C	0.10UF	Z	
C216			CE04EW1C100M	ELECTRO	10UF	16WV	
C217,218			CK73FF1E104Z	CHIP C	0.10UF	Z	
C219			CK73FB1H103K	CHIP C	0.010UF	K	
C220			CK73GB1H103K	CHIP C	0.010UF	K	
C222			CK73FB1H103K	CHIP C	0.010UF	K	
C224			CK73GB1H103K	CHIP C	0.010UF	K	
C225			CC73FCH1H470J	CHIP C	47PF	J	
C227,228			CK73GB1H103K	CHIP C	0.010UF	K	
C230-232			CK73GB1H103K	CHIP C	0.010UF	K	
C233			CK73GB1H392K	CHIP C	3900PF	K	
C234			CK73GB1E123K	CHIP C	0.012UF	K	
C235			CK73GB1H332K	CHIP C	3300PF	K	
C236			CK73FF1C105Z	CHIP C	1.0UF	Z	
C237			CK73GB1H103K	CHIP C	0.010UF	K	
C238			CK73FB1H103K	CHIP C	0.010UF	K	
C239			CC73GCH1H100D	CHIP C	10PF	D	
C240			CC73GCH1H030C	CHIP C	3.0PF	C	
C241			CC73GCH1H221J	CHIP C	220PF	J	
C242			CK73GB1H103K	CHIP C	0.010UF	K	
C243			CK73GF1E333Z	CHIP C	0.033UF	Z	
C244			CK73FF1C105Z	CHIP C	1.0UF	Z	
C245			CC73FCH1H470J	CHIP C	47PF	J	
C246			CC73FCH1H221J	CHIP C	220PF	J	
C252,253			CK73GB1H103K	CHIP C	0.010UF	K	
C254			CE04EW1A101M	ELECTRO	100UF	10WV	
C255,256			CE04EW1C100M	ELECTRO	10UF	16WV	
C257			CE04EW1C470M	ELECTRO	47UF	16WV	
C258			CK73GB1H103K	CHIP C	0.010UF	K	
C259			CE04EW1C100M	ELECTRO	10UF	16WV	
C260			CE04EW1E4R7M	ELECTRO	4.7UF	25WV	
C261			CE04EW1C100M	ELECTRO	10UF	16WV	
C262			CK73GB1H102K	CHIP C	1000PF	K	
C263-267			CK73FB1H102K	CHIP C	1000PF	K	
C270			CE04EW1C100M	ELECTRO	10UF	16WV	
C271			CE04EW1H4R7M	ELECTRO	4.7UF	50WV	
C272			CE04EW1H010M	ELECTRO	1.0UF	50WV	
C273			CE04EW1HR22M	ELECTRO	0.22UF	50WV	
C274			CE04EW1H4R7M	ELECTRO	4.7UF	50WV	
C275,276			CK73GB1H103K	CHIP C	0.010UF	K	
C277			CK73GF1E333Z	CHIP C	0.033UF	Z	
C279			CK73GB1H822K	CHIP C	8200PF	K	
C280			CK73GF1E104Z	CHIP C	0.10UF	Z	
C281			CK73GB1H332K	CHIP C	3300PF	K	
C282			CE04EW1C220M	ELECTRO	22UF	16WV	
C283			CE04EW1C100M	ELECTRO	10UF	16WV	
C284			CK73GF1E104Z	CHIP C	0.10UF	Z	
C286,287			CK73FF1C105Z	CHIP C	1.0UF	Z	
C288			CC73GCH1H050C	CHIP C	5.0PF	C	
C289			CE04EW1E4R7M	ELECTRO	4.7UF	25WV	
C290-293			CK73GB1H103K	CHIP C	0.010UF	K	
C294			CE04EW1C220M	ELECTRO	22UF	16WV	
C295			CK73GB1H103K	CHIP C	0.010UF	K	
C296			CK73FB1H103K	CHIP C	0.010UF	K	
C297			CK73GB1H103K	CHIP C	0.010UF	K	
C303			CK73GB1H472K	CHIP C	4700PF	K	
C304			CK73FB1E104K	CHIP C	0.10UF	K	
C305			CE04EW1C470M	ELECTRO	47UF	16WV	
C306			CK73FB1E104K	CHIP C	0.10UF	K	
C307			CK73FB1H103K	CHIP C	0.010UF	K	
C308			CE04EW1C101M	ELECTRO	100UF	16WV	
C309			CK73GB1H471K	CHIP C	470PF	K	
C310			CE04EW1C470M	ELECTRO	47UF	16WV	
C311			CK73GB1H222K	CHIP C	2200PF	K	
C312			CK73FB1H103K	CHIP C	0.010UF	K	
C313			CE04EW1C471M	ELECTRO	470UF	16WV	
C314			CK73GB1H102K	CHIP C	1000PF	K	
C315-317			CC73GCH1H101J	CHIP C	100PF	J	
C318			CK73GF1E104Z	CHIP C	0.10UF	Z	
C319			CE04EW1A101M	ELECTRO	100UF	10WV	
C320			CE04EW1H2R2M	ELECTRO	2.2UF	50WV	
C321,322			CE04EW1E4R7M	ELECTRO	4.7UF	25WV	
C323		✻	CS77AA1A2R2M	CHIP-TAN	2.2UF	10WV	
C324			CE04EW1E4R7M	ELECTRO	4.7UF	25WV	
C325			CK73GB1H222K	CHIP C	2200PF	K	
C326			CE04EW1H2R2M	ELECTRO	2.2UF	50WV	
C327			CK73GB1H103K	CHIP C	0.010UF	K	
C328			CK73FF1E104Z	CHIP C	0.10UF	Z	
C330			CK73FB1H222K	CHIP C	2200PF	K	
C331			CK73FB1H332K	CHIP C	3300PF	K	
C332			CE04EW1C470M	ELECTRO	47UF	16WV	
C333			CK73FB1H103K	CHIP C	0.010UF	K	
C334,335			CE04EW1C470M	ELECTRO	47UF	16WV	
C336,337			CK73FB1H103K	CHIP C	0.010UF	K	
C338			CE04EW1C101M	ELECTRO	100UF	16WV	
C339			CK73GB1H103K	CHIP C	0.010UF	K	
C340			CE04EW1C470M	ELECTRO	47UF	16WV	
C341			CE04EW1C101M	ELECTRO	100UF	16WV	
C342			CK73GB1E223K	CHIP C	0.022UF	K	
C343			CE04EW1HR47M	ELECTRO	0.47UF	50WV	
C344			CK73GF1E473Z	CHIP C	0.047UF	Z	
C345			CE04EW1E4R7M	ELECTRO	4.7UF	25WV	
C346			CK73GB1H103K	CHIP C	0.010UF	K	
C347			CC73GCH1H101J	CHIP C	100PF	J	
C348			CK73GB1H103K	CHIP C	0.010UF	K	
C349			CE04EW1C100M	ELECTRO	10UF	16WV	
C350			CE04EW1E4R7M	ELECTRO	4.7UF	25WV	
C351			CE04EW1H010M	ELECTRO	1.0UF	50WV	
C352,353			CK73GB1H102K	CHIP C	1000PF	K	
C354			CK73GF1E473Z	CHIP C	0.047UF	Z	
C355			CK73GB1H102K	CHIP C	1000PF	K	
C356,357			CK73FF1E104Z	CHIP C	0.10UF	Z	
C360-365			CC73FCH1H470J	CHIP C	47PF	J	
C366,367			CK73GB1H102K	CHIP C	1000PF	K	
C368-372			CK73GB1H103K	CHIP C	0.010UF	K	
C373,374			CC73GCH1H101J	CHIP C	100PF	J	
C376,377			CK73FB1H102K	CHIP C	1000PF	K	
C378,379			CK73GB1H103K	CHIP C	0.010UF	K	
C380-383			CK73GB1H102K	CHIP C	1000PF	K	
C384,385			CC73FUJ1H080D	CHIP C	8.0PF	D	
C386			CK73GF1E473Z	CHIP C	0.047UF	Z	
C387,388			CE04EW1C100M	ELECTRO	10UF	16WV	

PARTS LIST

TX-RX UNIT (X57-4660-21)

Ref. No.	Address	New parts	Parts No.	Description			Destination
C389			CE04EW1H010M	ELECTRO	1.0UF	50WV	
C390			CE04EW1C470M	ELECTRO	47UF	16WV	
C391,392			CE04EW1C100M	ELECTRO	10UF	16WV	
C393-399			CK73GB1H102K	CHIP C	1000PF	K	
C401			CE04LW1C331M	ELECTRO	330UF	16WV	
C402			CE04EW1C470M	ELECTRO	47UF	16WV	
C403			CK73FB1H103K	CHIP C	0.010UF	K	
C404			CK73GB1H102K	CHIP C	1000PF	K	
C406			CK73GB1H222K	CHIP C	2200PF	K	
C407			CK73GB1E223K	CHIP C	0.022UF	K	
C408,409			CK73GB1H103K	CHIP C	0.010UF	K	
C411,412			CK73FF1C105Z	CHIP C	1.0UF	Z	
C413			CC73FCH1H330J	CHIP C	33PF	J	
C500,501			CK73GB1H103K	CHIP C	0.010UF	K	
C504,505			CC73FCH1H270J	CHIP C	27PF	J	
C506,507			CK73GB1H103K	CHIP C	0.010UF	K	
C508			CK73FF1C105Z	CHIP C	1.0UF	Z	
C510,511			CC73FCH1H270J	CHIP C	27PF	J	
C512,513			CK73GB1H102K	CHIP C	1000PF	K	
C514			CK73GB1H103K	CHIP C	0.010UF	K	
C515,516			CC73GCH1H470J	CHIP C	47PF	J	
C517			CC73GCH1H330J	CHIP C	33PF	J	
C518			CC73GCH1H060D	CHIP C	6.0PF	D	
C519			CC73GCH1H470J	CHIP C	47PF	J	
C520			CC73GCH1H110J	CHIP C	11PF	J	
C522			CK73GB1H103K	CHIP C	0.010UF	K	
C523			CE04EW1A221M	ELECTRO	220UF	10WV	
C524			CK73FB1H103K	CHIP C	0.010UF	K	
C526			CE04EW1C470M	ELECTRO	47UF	16WV	
C527			CK73GB1H103K	CHIP C	0.010UF	K	
C528,529		*	CS77BA1C010M	CHIP-TAN	1.0UF	16WV	
C530			CK73FB1H103K	CHIP C	0.010UF	K	
C531			CE04EW1C470M	ELECTRO	47UF	16WV	
C532			CC73GCH1H101J	CHIP C	100PF	J	
C533			CC73GCH1H331J	CHIP C	330PF	J	
C534			CK73GB1H103K	CHIP C	0.010UF	K	
C535			CC73GCH1H101J	CHIP C	100PF	J	
C536,537			CK73GB1H103K	CHIP C	0.010UF	K	
C538			CC73GCH1H020C	CHIP C	2.0PF	C	
C539			CC73GCH1H030C	CHIP C	3.0PF	C	
C540			CC73GCH1H020C	CHIP C	2.0PF	C	
C541			CC73GCH1H1R5C	CHIP C	1.5PF	C	
C542,543			CC73GCH1H270J	CHIP C	27PF	J	
C544			CK73FB1H103K	CHIP C	0.010UF	K	
C545,546			CK73GB1H103K	CHIP C	0.010UF	K	
C549			CK73GB1H102K	CHIP C	1000PF	K	
C550			CK73GB1H103K	CHIP C	0.010UF	K	
C551			CK73GB1H102K	CHIP C	1000PF	K	
C552			CC73GCH1H070D	CHIP C	7.0PF	D	
C553,554			CC73GCH1HR75C	CHIP C	0.75PF	C	
C555			CC73GCH1H070D	CHIP C	7.0PF	D	
C557			CE04EW1H2R2M	ELECTRO	2.2UF	50WV	
C558			CK73FB1H102K	CHIP C	1000PF	K	
C559			CC73GCH1H181J	CHIP C	180PF	J	
C560			CC73GCH1H100D	CHIP C	10PF	D	
C561			CC73GCH1H221J	CHIP C	220PF	J	
C562			CC73GCH1H220J	CHIP C	22PF	J	
C563			CC73GCH1H151J	CHIP C	150PF	J	
C564,565			CK73FB1H103K	CHIP C	0.010UF	K	
C566			CK73GF1E104Z	CHIP C	0.10UF	Z	

Ref. No.	Address	New parts	Parts No.	Description			Destination
C570			CC73GCH1H470J	CHIP C	47PF	J	
C571			CK73GB1H561K	CHIP C	560PF	K	
C572			CC73GCH1H470J	CHIP C	47PF	J	
C573			CC73GCH1H151J	CHIP C	150PF	J	
C574			CC73GCH1H680J	CHIP C	68PF	J	
C575			CC73GCH1H270J	CHIP C	27PF	J	
C576			CC73GCH1H330J	CHIP C	33PF	J	
C577			CC73GCH1H101J	CHIP C	100PF	J	
C578			CC73GCH1H100D	CHIP C	10PF	D	
C579			CC73GCH1H220J	CHIP C	22PF	J	
C580,581			CK73GB1H103K	CHIP C	0.010UF	K	
C584			CK73GB1H102K	CHIP C	1000PF	K	
C585-587			CK73GB1H103K	CHIP C	0.010UF	K	
C588			CK73GB1H102K	CHIP C	1000PF	K	
C589			CK73FB1H103K	CHIP C	0.010UF	K	
C590,591			CC73GCH1H270J	CHIP C	27PF	J	
C592			CK73GB1H103K	CHIP C	0.010UF	K	
C594			CK73GB1H103K	CHIP C	0.010UF	K	
C595			CC73FCH1H070D	CHIP C	7.0PF	D	
C596			CC73FCH1H220J	CHIP C	22PF	J	
C597			CK73FB1H102K	CHIP C	1000PF	K	
C598			CC73FCH1H220J	CHIP C	22PF	J	
C599			CK73FB1H103K	CHIP C	0.010UF	K	
C600			CC73GCH1H030C	CHIP C	3.0PF	C	
C601			CK73FB1H103K	CHIP C	0.010UF	K	
C602			CK73GB1H102K	CHIP C	1000PF	K	
C603			CK73GB1H103K	CHIP C	0.010UF	K	
C604,605			CK73GB1H102K	CHIP C	1000PF	K	
C606			CK73GB1H103K	CHIP C	0.010UF	K	
C607			CK73GB1H102K	CHIP C	1000PF	K	
C608			CK73FB1H103K	CHIP C	0.010UF	K	
C609			CK73GB1H102K	CHIP C	1000PF	K	
C610			CC73FCH1H330J	CHIP C	33PF	J	
C611			CC73FCH1H060D	CHIP C	6.0PF	D	
C612			CC73FCH1H680J	CHIP C	68PF	J	
C614			CE04EW1H2R2M	ELECTRO	2.2UF	50WV	
C615			CK73FB1H102K	CHIP C	1000PF	K	
C616			CC73GCH1H181J	CHIP C	180PF	J	
C617			CC73GCH1H100D	CHIP C	10PF	D	
C618			CC73GCH1H221J	CHIP C	220PF	J	
C619			CC73GCH1H220J	CHIP C	22PF	J	
C620			CC73GCH1H151J	CHIP C	150PF	J	
C621			CK73GB1H103K	CHIP C	0.010UF	K	
C623-625			CK73GB1H103K	CHIP C	0.010UF	K	
C626			CK73FB1H103K	CHIP C	0.010UF	K	
C627			CK73GF1E104Z	CHIP C	0.10UF	Z	
C629			CK73GB1H103K	CHIP C	0.010UF	K	
C630			CC73GCH1H220J	CHIP C	22PF	J	
C632			CK73GB1E223K	CHIP C	0.022UF	K	
C633			CC73GCH1H101J	CHIP C	100PF	J	
C634,635			CK73FB1H103K	CHIP C	0.010UF	K	
C636			CE04EW1C100M	ELECTRO	10UF	16WV	
C637			CC73FCH1H100D	CHIP C	10PF	D	
C638			CC73FCH1H390J	CHIP C	39PF	J	
C639			CC73FCH1H151J	CHIP C	150PF	J	
C640			CC73FCH1H390J	CHIP C	39PF	J	
C641			CK73FB1H103K	CHIP C	0.010UF	K	
C642			CC73FCH1H050C	CHIP C	5.0PF	C	
C643,644			CK73FB1H103K	CHIP C	0.010UF	K	
C645			CK73FB1H102K	CHIP C	1000PF	K	

PARTS LIST

TX-RX UNIT (X57-4660-21)

Ref. No.	Address	New parts	Parts No.	Description			Destination
C646			CK73FB1H103K	CHIP C	0.010UF	K	
C647			CK73FB1H102K	CHIP C	1000PF	K	
C648,649			CK73FB1H103K	CHIP C	0.010UF	K	
C650			CE04EW1C100M	ELECTRO	10UF	16WV	
C651,652			CC73GCH1H150J	CHIP C	15PF	J	
C653-659			CC73FCH1H221J	CHIP C	220PF	J	
C660			CK73GB1H103K	CHIP C	0.010UF	K	
C663			CC73FCH1H221J	CHIP C	220PF	J	
C668			CK73FB1H223K	CHIP C	0.022UF	K	
C669			CE04EW1A221M	ELECTRO	220UF	10WV	
C670			CK73FB1H103K	CHIP C	0.010UF	K	
C671			CC73GCH1H390J	CHIP C	39PF	J	
C672			CK73FB1H102K	CHIP C	1000PF	K	
C673			CC73GCH1H150J	CHIP C	15PF	J	
C674			CK73GB1H102K	CHIP C	1000PF	K	
C675			CC73GCH1H090D	CHIP C	9.0PF	D	
C676			CC73GCH1H100D	CHIP C	10PF	D	
C677			CC73GCH1H180J	CHIP C	18PF	J	
C678,679			CK73GB1H102K	CHIP C	1000PF	K	
C680			CC73GCH1H050C	CHIP C	5.0PF	C	
C681			CC73GCH1H330J	CHIP C	33PF	J	
C682			CK73FB1H102K	CHIP C	1000PF	K	
C683			CC73GCH1H100D	CHIP C	10PF	D	
C684			CK73GB1H102K	CHIP C	1000PF	K	
C685			CC73GCH1H070D	CHIP C	7.0PF	D	
C686			CC73GCH1H090D	CHIP C	9.0PF	D	
C687			CC73GCH1H160J	CHIP C	16PF	J	
C688,689			CK73GB1H102K	CHIP C	1000PF	K	
C690			CC73GCH1H050C	CHIP C	5.0PF	C	
C691			CC73GCH1H200J	CHIP C	20PF	J	
C692			CK73FB1H102K	CHIP C	1000PF	K	
C693			CC73GCH1H100D	CHIP C	10PF	D	
C694			CK73GB1H102K	CHIP C	1000PF	K	
C695			CC73GCH1H050C	CHIP C	5.0PF	C	
C696			CC73GCH1H080D	CHIP C	8.0PF	D	
C697			CC73GCH1H120J	CHIP C	12PF	J	
C698,699			CK73GB1H102K	CHIP C	1000PF	K	
C700			CC73GCH1H050C	CHIP C	5.0PF	C	
C701-704			CK73GB1H102K	CHIP C	1000PF	K	
C705			CC73GCH1H391J	CHIP C	390PF	J	
C706			CC73GCH1H270J	CHIP C	27PF	J	
C707			CK73FB1H103K	CHIP C	0.010UF	K	
C709			CC73GCH1H180J	CHIP C	18PF	J	
C710			CK73FB1H102K	CHIP C	1000PF	K	
C711			CK73GB1H103K	CHIP C	0.010UF	K	
C712			C92-0001-05	CHIP-TAN	0.1UF	35WV	
C713			CC73GCH1H020C	CHIP C	2.0PF	C	
C714			CK73FB1H103K	CHIP C	0.010UF	K	
C715			CK73GB1H102K	CHIP C	1000PF	K	
C800			CK73FB1H103K	CHIP C	0.010UF	K	
C801			CC73GCH1H060D	CHIP C	6.0PF	D	
C802			CK73GB1H103K	CHIP C	0.010UF	K	
C804			CK73GB1H103K	CHIP C	0.010UF	K	
C805			C92-0003-05	CHIP-TAN	0.47UF	25WV	
C806,807			CK73FB1H103K	CHIP C	0.010UF	K	
C808			C92-0003-05	CHIP-TAN	0.47UF	25WV	
C810			CK73FB1H103K	CHIP C	0.010UF	K	
C811			CK73GB1H102K	CHIP C	1000PF	K	
C812			CC73GCH1H100D	CHIP C	10PF	D	
C813,814			CK73GB1H103K	CHIP C	0.010UF	K	

Ref. No.	Address	New parts	Parts No.	Description			Destination
C815,816			CK73FB1H103K	CHIP C	0.010UF	K	
C817		✻	CS77BA1C010M	CHIP-TAN	1.0UF	16WV	
C818			CE04EW1A101M	ELECTRO	100UF	10WV	
C819			CK73FB1H103K	CHIP C	0.010UF	K	
C900,901			CC73GCH1H101J	CHIP C	100PF	J	
C902			CE04EW1A101M	ELECTRO	100UF	10WV	
C903,904			CK73FF1C105Z	CHIP C	1.0UF	Z	
C905			CE04EW1C100M	ELECTRO	10UF	16WV	
C906			CK73GB1H103K	CHIP C	0.010UF	K	
C907			CE04EW1A101M	ELECTRO	100UF	10WV	
C908			CK73GB1E223K	CHIP C	0.022UF	K	
C909			CK73GB1H102K	CHIP C	1000PF	K	
C910			CK73FF1C105Z	CHIP C	1.0UF	Z	
TC501		✻	C05-0355-15	CERAMIC TRIMMER CAPACITOR (30PF)			
TC502-505			C05-0345-15	CERAMIC TRIMMER CAPACITOR (10PF)			
CN1-3			E04-0154-05	PIN SOCKET			
CN4			E40-0211-05	PIN ASSY			
CN7			E40-0211-05	PIN ASSY			
CN9,10			E40-3237-05	PIN ASSY			
CN11			E40-3238-05	PIN ASSY			
CN12			E40-3240-05	PIN ASSY			
CN13			E40-3239-05	PIN ASSY			
CN14			E40-5797-05	FLAT CABLE CONNECTOR			
CN15			E40-5765-05	FLAT CABLE CONNECTOR			
CN19			E04-0154-05	PIN SOCKET			
CN500			E40-5764-05	FLAT CABLE CONNECTOR			
CN501,502			E04-0154-05	PIN SOCKET			
CN503			E40-3237-05	PIN ASSY			
J1			E06-0658-05	DIN SOCKET (ACC1)			
J2			E56-0407-05	DIN SOCKET (ACC2)			
J3,4			E13-0166-05	PIN JACK (RELAY)			
J5			E11-0414-05	3.5D PHONE JACK (3P: EXT SP)			
J6		✻	E11-0705-05	PHONE JACK (9P: KEY)			
W1	3B		E37-0506-05	LEAD WIRE WITH CONNECTOR			
W2	3B		E37-0495-05	LEAD WIRE WITH MINIPIN PLUG			
W3	3B		E37-0496-05	LEAD WIRE WITH MINIPIN PLUG			
W4	3B		E37-0507-05	LEAD WIRE WITH CONNECTOR			
-			F10-2062-04	SHIELDING CASE (DDS)			
-			F10-2163-14	SHIELDING CASE (VCO)			
-			F10-2164-04	SHIELDING COVER (VCO)			
F1			F53-0055-05	FUSE (0.8A)			
-			G13-1493-04	CUSHION (VCO)			
-			J30-0545-05	SPACER (XF1)			
CF500			L72-0391-05	CERAMIC FILTER			
L1		✻	L41-2785-32	SMALL FIXED INDUCTOR (0.27UH)			
L3,4			L33-0695-05	SMALL FIXED INDUCTOR (1.0MH)			
L5		✻	L41-4795-32	SMALL FIXED INDUCTOR (4.7UH)			
L6			L33-0695-05	SMALL FIXED INDUCTOR (1.0MH)			
L7,8		✻	L41-6895-32	SMALL FIXED INDUCTOR (6.8UH)			
L10		✻	L41-1895-32	SMALL FIXED INDUCTOR (1.8UH)			
L11		✻	L41-6895-32	SMALL FIXED INDUCTOR (6.8UH)			
L12		✻	L41-1895-32	SMALL FIXED INDUCTOR (1.8UH)			
L13		✻	L41-1295-32	SMALL FIXED INDUCTOR (1.2UH)			
L14		✻	L41-5695-32	SMALL FIXED INDUCTOR (5.6UH)			
L15			L40-1595-48	SMALL FIXED INDUCTOR (1.5UH)			
L16		✻	L41-8285-32	SMALL FIXED INDUCTOR (0.82UH)			
L17			L40-2792-18	SMALL FIXED INDUCTOR (2.7UH)			
L18		✻	L41-8285-32	SMALL FIXED INDUCTOR (0.82UH)			

PARTS LIST

TX-RX UNIT (X57-4660-21)

Ref. No.	Address	New parts	Parts No.	Description	Destination
L19		✻	L41-4785-32	SMALL FIXED INDUCTOR (0.47UH)	
L20			L40-2792-18	SMALL FIXED INDUCTOR (2.7UH)	
L21		✻	L41-4785-32	SMALL FIXED INDUCTOR (0.47UH)	
L22		✻	L41-2785-32	SMALL FIXED INDUCTOR (0.27UH)	
L23		✻	L41-1895-32	SMALL FIXED INDUCTOR (1.8UH)	
L24		✻	L41-2785-32	SMALL FIXED INDUCTOR (0.27UH)	
L25		✻	L41-2285-32	SMALL FIXED INDUCTOR (0.22UH)	
L26		✻	L41-1295-32	SMALL FIXED INDUCTOR (1.2UH)	
L27		✻	L41-2285-32	SMALL FIXED INDUCTOR (0.22UH)	
L28			L40-1585-48	SMALL FIXED INDUCTOR (150NH)	
L29		✻	L41-8285-32	SMALL FIXED INDUCTOR (0.82UH)	
L30			L40-1585-48	SMALL FIXED INDUCTOR (150NH)	
L31,32		✻	L41-2785-32	SMALL FIXED INDUCTOR (0.27UH)	
L33			L19-0324-05	TOROIDAL COIL	
L34			L33-0695-05	SMALL FIXED INDUCTOR (1.0MH)	
L35		✻	L41-4705-32	SMALL FIXED INDUCTOR (47UH)	
L36			L39-1255-15	TOROIDAL COIL	
L37		✻	L41-1015-32	SMALL FIXED INDUCTOR (100UH)	
L38			L34-4413-05	COIL	
L39			L19-0324-05	TOROIDAL COIL	
L40		✻	L41-3395-32	SMALL FIXED INDUCTOR (3.3UH)	
L41			L19-0324-05	TOROIDAL COIL	
L42,43			L34-4408-05	COIL	
L44			L34-4415-05	COIL	
L45		✻	L41-1015-32	SMALL FIXED INDUCTOR (100UH)	
L46			L39-1255-15	TOROIDAL COIL	
L48			L34-4406-05	COIL	
L49			L34-4414-05	COIL	
L50			L40-1085-48	SMALL FIXED INDUCTOR (100NH)	
L51			L34-4410-05	COIL	
L52,53		✻	L41-1015-32	SMALL FIXED INDUCTOR (100UH)	
L55		✻	L41-1015-32	SMALL FIXED INDUCTOR (100UH)	
L56		✻	L41-5695-32	SMALL FIXED INDUCTOR (5.6UH)	
L57		✻	L41-1005-32	SMALL FIXED INDUCTOR (10UH)	
L58,59		✻	L41-1015-32	SMALL FIXED INDUCTOR (100UH)	
L60			L34-4412-05	COIL	
L61		✻	L34-4464-05	COIL	
L62		✻	L41-1015-32	SMALL FIXED INDUCTOR (100UH)	
L63			L34-4406-05	COIL	
L64,65			L34-4333-05	COIL	
L66		✻	L41-1015-32	SMALL FIXED INDUCTOR (100UH)	
L67			L34-4333-05	COIL	
L68			L39-1255-15	TOROIDAL COIL	
L69			L34-4333-05	COIL	
L70			L19-0324-05	TOROIDAL COIL	
L71		✻	L41-1015-32	SMALL FIXED INDUCTOR (100UH)	
L72		✻	L41-1005-32	SMALL FIXED INDUCTOR (10UH)	
L73			L19-0324-05	TOROIDAL COIL	
L74		✻	L41-1015-32	SMALL FIXED INDUCTOR (100UH)	
L75,76			L34-4401-05	COIL	
L77,78		✻	L41-4705-32	SMALL FIXED INDUCTOR (47UH)	
L79		✻	L41-1015-32	SMALL FIXED INDUCTOR (100UH)	
L81			L40-1021-13	SMALL FIXED INDUCTOR (1.0MH)	
L82			L33-0695-05	SMALL FIXED INDUCTOR (1.0MH)	
L84		✻	L41-1015-32	SMALL FIXED INDUCTOR (100UH)	
L85			L40-2281-17	SMALL FIXED INDUCTOR (0.22UH)	
L500-503		✻	L41-1015-32	SMALL FIXED INDUCTOR (100UH)	
L504			L40-6885-48	SMALL FIXED INDUCTOR (680NH)	
L505			L40-1085-48	SMALL FIXED INDUCTOR (100NH)	
L506			L40-8275-48	SMALL FIXED INDUCTOR (82NH)	

Ref. No.	Address	New parts	Parts No.	Description	Destination
L507			L40-5675-48	SMALL FIXED INDUCTOR (56NH)	
L508		✻	L41-1015-32	SMALL FIXED INDUCTOR (100UH)	
L509		✻	L41-3395-32	SMALL FIXED INDUCTOR (3.3UH)	
L510			L40-1595-48	SMALL FIXED INDUCTOR (1.5UH)	
L511			L40-2295-48	SMALL FIXED INDUCTOR (2.2UH)	
L512		✻	L41-3395-32	SMALL FIXED INDUCTOR (3.3UH)	
L513			L34-4398-05	COIL	
L514			L34-4399-05	COIL	
L515			L34-4398-05	COIL	
L516		✻	L41-1015-32	SMALL FIXED INDUCTOR (100UH)	
L517,518		✻	L41-2205-32	SMALL FIXED INDUCTOR (22UH)	
L522		✻	L41-3395-32	SMALL FIXED INDUCTOR (3.3UH)	
L523		✻	L41-3995-32	SMALL FIXED INDUCTOR (3.9UH)	
L524		✻	L41-5695-32	SMALL FIXED INDUCTOR (5.6UH)	
L525			L40-8295-48	SMALL FIXED INDUCTOR (8.2UH)	
L527		✻	L41-1015-32	SMALL FIXED INDUCTOR (100UH)	
L528,529		✻	L41-1005-32	SMALL FIXED INDUCTOR (10UH)	
L530		✻	L41-1295-32	SMALL FIXED INDUCTOR (1.2UH)	
L531			L34-4399-05	COIL	
L532		✻	L41-1015-32	SMALL FIXED INDUCTOR (100UH)	
L533		✻	L41-2285-32	SMALL FIXED INDUCTOR (0.22UH)	
L534		✻	L41-1015-32	SMALL FIXED INDUCTOR (100UH)	
L535,536		✻	L41-2205-32	SMALL FIXED INDUCTOR (22UH)	
L539			L34-4401-05	COIL	
L540,541		✻	L41-1015-32	SMALL FIXED INDUCTOR (100UH)	
L542		✻	L41-1005-32	SMALL FIXED INDUCTOR (10UH)	
L543		✻	L41-4795-32	SMALL FIXED INDUCTOR (4.7UH)	
L544		✻	L41-1015-32	SMALL FIXED INDUCTOR (100UH)	
L545			L34-4424-05	COIL	
L546			L34-2360-05	COIL	
L547			L34-4424-05	COIL	
L548			L34-2359-05	COIL	
L549			L34-4424-05	COIL	
L550			L34-2359-05	COIL	
L551		✻	L41-8285-32	SMALL FIXED INDUCTOR (0.82UH)	
L800		✻	L41-8285-32	SMALL FIXED INDUCTOR (0.82UH)	
L801		✻	L41-4705-32	SMALL FIXED INDUCTOR (47UH)	
L802,803			L34-4401-05	COIL	
L804			L33-0695-05	SMALL FIXED INDUCTOR (1.0MHZ)	
X501			L77-1521-15	CRYSTAL RESONATOR (20MHZ)	
X502			L77-1598-05	CRYSTAL RESONATOR (62.35MHZ)	
XF1			L71-0432-05	MCF (73.045MHZ)	
XF2			L71-0249-05	CRYSTAL FILTER (10.695MHZ)	
XF3			L71-0433-15	MCF (10.695MHZ)	
-			N30-2606-46	PAN HEAD MACHINE SCREW (VCO)	
CP500-503			R90-0721-05	MULTI-COMP 4.7K X16	
R1			R92-0679-05	CHIP R 0 OHM	
R2			RK73FB2A101J	CHIP R 100 J 1/10W	
R3			RK73FB2A472J	CHIP R 4.7K J 1/10W	
R4			RK73GB1J472J	CHIP R 4.7K J 1/16W	
R5			RK73FB2A101J	CHIP R 100 J 1/10W	
R6			RK73FB2A222J	CHIP R 2.2K J 1/10W	
R7			RK73FB2A181J	CHIP R 180 J 1/10W	
R8			RK73FB2A101J	CHIP R 100 J 1/10W	
R9			RK73EB2B151J	CHIP R 150 J 1/8W	
R10			RK73FB2A330J	CHIP R 33 J 1/10W	
R11			RK73EB2B121J	CHIP R 120 J 1/8W	
R12			RK73FB2A330J	CHIP R 33 J 1/10W	
R13			RK73EB2B121J	CHIP R 120 J 1/8W	

PARTS LIST

TX-RX UNIT (X57-4660-21)

Ref. No.	Address	New parts	Parts No.	Description			Destination
R14			RK73FB2A330J	CHIP R	33	J 1/10W	
R15			RK73EB2B121J	CHIP R	120	J 1/8W	
R16			RK73FB2A330J	CHIP R	33	J 1/10W	
R17			RK73EB2B121J	CHIP R	120	J 1/8W	
R18			RK73FB2A330J	CHIP R	33	J 1/10W	
R19			RK73EB2B121J	CHIP R	120	J 1/8W	
R20			RK73FB2A330J	CHIP R	33	J 1/10W	
R21			RK73EB2B121J	CHIP R	120	J 1/8W	
R22			RK73FB2A330J	CHIP R	33	J 1/10W	
R23			RK73EB2B121J	CHIP R	120	J 1/8W	
R24			RK73GB1J472J	CHIP R	4.7K	J 1/16W	
R25			RK73FB2A471J	CHIP R	470	J 1/10W	
R26			RK73FB2A151J	CHIP R	150	J 1/10W	
R27,28			RK73GB1J681J	CHIP R	680	J 1/16W	
R29-32			RK73FB2A100J	CHIP R	10	J 1/10W	
R33			RK73GB1J271J	CHIP R	270	J 1/16W	
R34			RK73FB2A100J	CHIP R	10	J 1/10W	
R35			RK73FB2A221J	CHIP R	220	J 1/10W	
R36			RK73GB1J152J	CHIP R	1.5K	J 1/16W	
R37			RK73FB2A101J	CHIP R	100	J 1/10W	
R38			RK73FB2A220J	CHIP R	22	J 1/10W	
R39			RK73FB2A470J	CHIP R	47	J 1/10W	
R40			RK73FB2A391J	CHIP R	390	J 1/10W	
R41			RK73FB2A332J	CHIP R	3.3K	J 1/10W	
R42			R92-0679-05	CHIP R	0 OHM		
R43			RK73GB1J474J	CHIP R	470K	J 1/16W	
R44			RK73GB1J273J	CHIP R	27K	J 1/16W	
R45			RK73GB1J471J	CHIP R	470	J 1/16W	
R46			RK73FB2A104J	CHIP R	100K	J 1/10W	
R47			RK73GB1J101J	CHIP R	100	J 1/16W	
R48			R92-1252-05	CHIP R	0 OHM	J 1/16W	
R49			RK73GB1J332J	CHIP R	3.3K	J 1/16W	
R50			R92-1252-05	CHIP R	0 OHM	J 1/16W	
R51,52			RK73GB1J222J	CHIP R	2.2K	J 1/16W	
R53			RK73FB2A272J	CHIP R	2.7K	J 1/10W	
R54			RK73GB1J101J	CHIP R	100	J 1/16W	
R55			RK73GB1J102J	CHIP R	1.0K	J 1/16W	
R56			RK73FB2A560J	CHIP R	56	J 1/10W	
R57			RK73GB1J102J	CHIP R	1.0K	J 1/16W	
R58			RK73FB2A471J	CHIP R	470	J 1/10W	
R59			RK73FB2A220J	CHIP R	22	J 1/10W	
R60			RK73FB2A270J	CHIP R	27	J 1/10W	
R61			RK73FB2A680J	CHIP R	68	J 1/10W	
R62			RK73FB2A102J	CHIP R	1.0K	J 1/10W	
R63			RK73GB1J103J	CHIP R	10K	J 1/16W	
R64			RK73GB1J681J	CHIP R	680	J 1/16W	
R65			RK73GB1J102J	CHIP R	1.0K	J 1/16W	
R66			RK73FB2A102J	CHIP R	1.0K	J 1/10W	
R67			RK73GB1J102J	CHIP R	1.0K	J 1/16W	
R68			RK73GB1J103J	CHIP R	10K	J 1/16W	
R69			RK73GB1J101J	CHIP R	100	J 1/16W	
R70			RK73GB1J472J	CHIP R	4.7K	J 1/16W	
R71			RK73GB1J333J	CHIP R	33K	J 1/16W	
R72			RK73GB1J101J	CHIP R	100	J 1/16W	
R73			RK73GB1J104J	CHIP R	100K	J 1/16W	
R74			RK73GB1J471J	CHIP R	470	J 1/16W	
R75			RK73GB1J223J	CHIP R	22K	J 1/16W	
R76			RK73GB1J103J	CHIP R	10K	J 1/16W	
R77			RK73GB1J101J	CHIP R	100	J 1/16W	
R78			RK73FB2A472J	CHIP R	4.7K	J 1/10W	

Ref. No.	Address	New parts	Parts No.	Description			Destination
R79			RK73GB1J103J	CHIP R	10K	J 1/16W	
R80,81			RK73GB1J122J	CHIP R	1.2K	J 1/16W	
R83			RK73GB1J122J	CHIP R	1.2K	J 1/16W	
R85			RK73FB2A221J	CHIP R	220	J 1/10W	
R86			RK73GB1J471J	CHIP R	470	J 1/16W	
R87			RK73FB2A270J	CHIP R	27	J 1/10W	
R88			RK73GB1J101J	CHIP R	100	J 1/16W	
R89			RK73GB1J104J	CHIP R	100K	J 1/16W	
R90			RK73GB1J122J	CHIP R	1.2K	J 1/16W	
R93			RK73GB1J102J	CHIP R	1.0K	J 1/16W	
R94			R92-1252-05	CHIP R	0 OHM	J 1/16W	
R95			R92-0670-05	CHIP R	0 OHM		
R96,97			RK73FB2A681J	CHIP R	680	J 1/10W	
R98			RK73FB2A101J	CHIP R	100	J 1/10W	
R100			RK73FB2A152J	CHIP R	1.5K	J 1/10W	
R101			RK73FB2A102J	CHIP R	1.0K	J 1/10W	
R102			RK73FB2A331J	CHIP R	330	J 1/10W	
R103			RK73FB2A101J	CHIP R	100	J 1/10W	
R105			RK73FB2A152J	CHIP R	1.5K	J 1/10W	
R106			RK73FB2A102J	CHIP R	1.0K	J 1/10W	
R107			RK73FB2A391J	CHIP R	390	J 1/10W	
R108			RK73FB2A101J	CHIP R	100	J 1/10W	
R110			RK73FB2A152J	CHIP R	1.5K	J 1/10W	
R111			RK73FB2A102J	CHIP R	1.0K	J 1/10W	
R112			RK73FB2A471J	CHIP R	470	J 1/10W	
R113			RK73FB2A101J	CHIP R	100	J 1/10W	
R115			RK73FB2A221J	CHIP R	220	J 1/10W	
R116			RK73FB2A122J	CHIP R	1.2K	J 1/10W	
R117			RK73GB1J333J	CHIP R	33K	J 1/16W	
R118			RK73FB2A562J	CHIP R	5.6K	J 1/10W	
R119			RK73GB1J473J	CHIP R	47K	J 1/16W	
R120			RK73GB1J223J	CHIP R	22K	J 1/16W	
R121-123			RK73GB1J473J	CHIP R	47K	J 1/16W	
R124			RK73GB1J222J	CHIP R	2.2K	J 1/16W	
R125			RK73GB1J330J	CHIP R	33	J 1/16W	
R126			RK73FB2A102J	CHIP R	1.0K	J 1/10W	
R127			RK73GB1J681J	CHIP R	680	J 1/16W	
R128			RK73GB1J682J	CHIP R	6.8K	J 1/16W	
R129			RK73GB1J223J	CHIP R	22K	J 1/16W	
R130			RK73FB2A331J	CHIP R	330	J 1/10W	
R131			RK73GB1J681J	CHIP R	680	J 1/16W	
R132			RK73FB2A103J	CHIP R	10K	J 1/10W	
R133			RK73FB2A101J	CHIP R	100	J 1/10W	
R134			RK73GB1J223J	CHIP R	22K	J 1/16W	
R135			RK73GB1J821J	CHIP R	820	J 1/16W	
R136			RK73FB2A101J	CHIP R	100	J 1/10W	
R137			R92-0670-05	CHIP R	0 OHM		
R138			RK73FB2A102J	CHIP R	1.0K	J 1/10W	
R139			RK73FB2A823J	CHIP R	82K	J 1/10W	
R140			RK73FB2A103J	CHIP R	10K	J 1/10W	
R141-144			RK73GB1J330J	CHIP R	33	J 1/16W	
R145			RK73FB2A472J	CHIP R	4.7K	J 1/10W	
R146,147			RK73GB1J331J	CHIP R	330	J 1/16W	
R148,149			RK73GB1J101J	CHIP R	100	J 1/16W	
R150			RK73GB1J473J	CHIP R	47K	J 1/16W	
R151			RK73FB2A390J	CHIP R	39	J 1/10W	
R152			RK73FB2A181J	CHIP R	180	J 1/10W	
R153,154			RK73GB1J222J	CHIP R	2.2K	J 1/16W	
R155			RK73GB1J103J	CHIP R	10K	J 1/16W	
R156			RK73GB1J273J	CHIP R	27K	J 1/16W	

PARTS LIST

TX-RX UNIT (X57-4660-21)

Ref. No.	Address	New parts	Parts No.	Description	Destination
R157-160			RK73FB2A330J	CHIP R 33 J 1/10W	
R161,162			R92-1252-05	CHIP R 0 OHM J 1/16W	
R163			RK73GB1J102J	CHIP R 1.0K J 1/16W	
R164			RK73GB1J151J	CHIP R 150 J 1/16W	
R165			RK73FB2A560J	CHIP R 56 J 1/10W	
R166			RK73FB2A820J	CHIP R 82 J 1/10W	
R167,168			RK73GB1J222J	CHIP R 2.2K J 1/16W	
R169			RK73GB1J101J	CHIP R 100 J 1/16W	
R170			RK73GB1J561J	CHIP R 560 J 1/16W	
R171			RK73GB1J330J	CHIP R 33 J 1/16W	
R172,173			RK73FB2A330J	CHIP R 33 J 1/10W	
R174			RK73FB2A102J	CHIP R 1.0K J 1/10W	
R175			RK73GB1J470J	CHIP R 47 J 1/16W	
R176			RK73GB1J104J	CHIP R 100K J 1/16W	
R177			RK73GB1J333J	CHIP R 33K J 1/16W	
R178			RK73FB2A471J	CHIP R 470 J 1/10W	
R179			RK73FB2A101J	CHIP R 100 J 1/10W	
R180			RK73GB1J223J	CHIP R 22K J 1/16W	
R181			RK73FB2A103J	CHIP R 10K J 1/10W	
R182			RK73FB2A333J	CHIP R 33K J 1/10W	
R183			RK73FB2A104J	CHIP R 100K J 1/10W	
R184			RK73GB1J471J	CHIP R 470 J 1/16W	
R185			RK73FB2A101J	CHIP R 100 J 1/10W	
R186			RK73FB2A103J	CHIP R 10K J 1/10W	
R187,188			RK73FB2A221J	CHIP R 220 J 1/10W	
R190			RK73GB1J103J	CHIP R 10K J 1/16W	
R191			RK73GB1J222J	CHIP R 2.2K J 1/16W	
R192			RK73GB1J224J	CHIP R 220K J 1/16W	
R193			RK73GB1J223J	CHIP R 22K J 1/16W	
R194			RK73GB1J102J	CHIP R 1.0K J 1/16W	
R195			RK73GB1J101J	CHIP R 100 J 1/16W	
R196			RK73GB1J224J	CHIP R 220K J 1/16W	
R197			RK73FB2A222J	CHIP R 2.2K J 1/10W	
R198			RK73GB1J562J	CHIP R 5.6K J 1/16W	
R199			RK73GB1J471J	CHIP R 470 J 1/16W	
R200			RK73GB1J104J	CHIP R 100K J 1/16W	
R201			RK73GB1J473J	CHIP R 47K J 1/16W	
R202			RK73GB1J222J	CHIP R 2.2K J 1/16W	
R203,204			RK73GB1J224J	CHIP R 220K J 1/16W	
R205			RK73GB1J102J	CHIP R 1.0K J 1/16W	
R206			RK73FB2A104J	CHIP R 100K J 1/10W	
R207			RK73GB1J472J	CHIP R 4.7K J 1/16W	
R208			RK73GB1J102J	CHIP R 1.0K J 1/16W	
R209			RK73GB1J224J	CHIP R 220K J 1/16W	
R210			R92-1252-05	CHIP R 0 OHM J 1/16W	
R212			R92-1252-05	CHIP R 0 OHM J 1/16W	
R213			RK73GB1J101J	CHIP R 100 J 1/16W	
R214			RK73GB1J104J	CHIP R 100K J 1/16W	
R215			RK73GB1J223J	CHIP R 22K J 1/16W	
R216			RK73GB1J562J	CHIP R 5.6K J 1/16W	
R217			RK73GB1J222J	CHIP R 2.2K J 1/16W	
R218			RK73GB1J561J	CHIP R 560 J 1/16W	
R219			RK73GB1J103J	CHIP R 10K J 1/16W	
R220			RK73FB2A823J	CHIP R 82K J 1/10W	
R221			RK73GB1J101J	CHIP R 100 J 1/16W	
R222			RK73GB1J105J	CHIP R 1.0M J 1/16W	
R223			RK73GB1J102J	CHIP R 1.0K J 1/16W	
R224			RK73FB2A181J	CHIP R 180 J 1/10W	
R225			RK73GB1J101J	CHIP R 100 J 1/16W	
R233			R92-1252-05	CHIP R 0 OHM J 1/16W	

Ref. No.	Address	New parts	Parts No.	Description	Destination
R235			RK73GB1J473J	CHIP R 47K J 1/16W	
R236			RK73FB2A102J	CHIP R 1.0K J 1/10W	
R237			RK73GB1J474J	CHIP R 470K J 1/16W	
R238			RK73GB1J103J	CHIP R 10K J 1/16W	
R239			RK73GB1J822J	CHIP R 8.2K J 1/16W	
R240			RK73GB1J331J	CHIP R 330 J 1/16W	
R241			RK73GB1J393J	CHIP R 39K J 1/16W	
R242			RK73GB1J104J	CHIP R 100K J 1/16W	
R243			RK73FB2A823J	CHIP R 82K J 1/10W	
R244			RK73GB1J104J	CHIP R 100K J 1/16W	
R245			RK73GB1J472J	CHIP R 4.7K J 1/16W	
R246			RK73GB1J223J	CHIP R 22K J 1/16W	
R247			RK73GB1J473J	CHIP R 47K J 1/16W	
R248			RK73GB1J273J	CHIP R 27K J 1/16W	
R249			RK73GB1J102J	CHIP R 1.0K J 1/16W	
R250			RK73GB1J472J	CHIP R 4.7K J 1/16W	
R251			RK73GB1J221J	CHIP R 220 J 1/16W	
R252			RK73FB2A272J	CHIP R 2.7K J 1/10W	
R253			RK73GB1J472J	CHIP R 4.7K J 1/16W	
R254,255			RK73GB1J104J	CHIP R 100K J 1/16W	
R257			RK73GB1J332J	CHIP R 3.3K J 1/16W	
R258			RK73FB2A184J	CHIP R 180K J 1/10W	
R259			RK73GB1J101J	CHIP R 100 J 1/16W	
R260			RK73GB1J102J	CHIP R 1.0K J 1/16W	
R261			RK73GB1J472J	CHIP R 4.7K J 1/16W	
R262			RK73GB1J332J	CHIP R 3.3K J 1/16W	
R263,264			RK73GB1J224J	CHIP R 220K J 1/16W	
R265			RK73GB1J101J	CHIP R 100 J 1/16W	
R266			RK73GB1J102J	CHIP R 1.0K J 1/16W	
R267			RK73GB1J331J	CHIP R 330 J 1/16W	
R268			RK73GB1J221J	CHIP R 220 J 1/16W	
R269			RK73GB1J224J	CHIP R 220K J 1/16W	
R270			R92-1252-05	CHIP R 0 OHM J 1/16W	
R271			RK73FB2A222J	CHIP R 2.2K J 1/10W	
R272			RK73GB1J222J	CHIP R 2.2K J 1/16W	
R273			RK73FB2A101J	CHIP R 100 J 1/10W	
R274			RK73GB1J222J	CHIP R 2.2K J 1/16W	
R275			RK73GB1J104J	CHIP R 100K J 1/16W	
R276			RK73GB1J224J	CHIP R 220K J 1/16W	
R277			RK73GB1J104J	CHIP R 100K J 1/16W	
R278			RK73FB2A101J	CHIP R 100 J 1/10W	
R279			RK73GB1J103J	CHIP R 10K J 1/16W	
R280			RK73GB1J332J	CHIP R 3.3K J 1/16W	
R281			RK73GB1J822J	CHIP R 8.2K J 1/16W	
R282			RK73GB1J103J	CHIP R 10K J 1/16W	
R283			R92-0670-05	CHIP R 0 OHM	
R284			RK73GB1J103J	CHIP R 10K J 1/16W	
R285			RK73FB2A101J	CHIP R 100 J 1/10W	
R286			RK73GB1J561J	CHIP R 560 J 1/16W	
R287			RK73GB1J223J	CHIP R 22K J 1/16W	
R288			RK73GB1J333J	CHIP R 33K J 1/16W	
R289			RK73GB1J104J	CHIP R 100K J 1/16W	
R290			RK73GB1J101J	CHIP R 100 J 1/16W	
R291			RK73GB1J104J	CHIP R 100K J 1/16W	
R292			RK73GB1J472J	CHIP R 4.7K J 1/16W	
R293			RK73FB2A332J	CHIP R 3.3K J 1/10W	
R294			RK73GB1J474J	CHIP R 470K J 1/16W	
R298			RK73FB2A101J	CHIP R 100 J 1/10W	
R299-306			RK73GB1J103J	CHIP R 10K J 1/16W	
R307			RK73FB2A272J	CHIP R 2.7K J 1/10W	

PARTS LIST

TX-RX UNIT (X57-4660-21)

Ref. No.	Address	New parts	Parts No.	Description	Destination
R308			RK73FB2A473J	CHIP R 47K J 1/10W	
R309,310			RK73FB2A223J	CHIP R 22K J 1/10W	
R311			RK73FB2A471J	CHIP R 470 J 1/10W	
R312,313			RK73GB1J472J	CHIP R 4.7K J 1/16W	
R314,315			RK73GB1J101J	CHIP R 100 J 1/16W	
R316			RK73GB1J822J	CHIP R 8.2K J 1/16W	
R317			RK73GB1J222J	CHIP R 2.2K J 1/16W	
R318			RK73GB1J153J	CHIP R 15K J 1/16W	
R319			RK73GB1J102J	CHIP R 1.0K J 1/16W	
R320			RK73GB1J222J	CHIP R 2.2K J 1/16W	
R321			RK73GB1J103J	CHIP R 10K J 1/16W	
R322,323			RK73GB1J331J	CHIP R 330 J 1/16W	
R324			RK73GB1J102J	CHIP R 1.0K J 1/16W	
R325			RK73GB1J222J	CHIP R 2.2K J 1/16W	
R326,327			RK73GB1J332J	CHIP R 3.3K J 1/16W	
R328			RK73GB1J822J	CHIP R 8.2K J 1/16W	
R329			RK73GB1J472J	CHIP R 4.7K J 1/16W	
R330			RK73GB1J101J	CHIP R 100 J 1/16W	
R331			RK73GB1J104J	CHIP R 100K J 1/16W	
R332			RK73FB2A682J	CHIP R 6.8K J 1/10W	
R333			RK73GB1J102J	CHIP R 1.0K J 1/16W	
R334,335			RK73GB1J681J	CHIP R 680 J 1/16W	
R336			RK73GB1J103J	CHIP R 10K J 1/16W	
R337,338			RK73GB1J102J	CHIP R 1.0K J 1/16W	
R339			RK73GB1J223J	CHIP R 22K J 1/16W	
R340,341			R92-1252-05	CHIP R 0 OHM J 1/16W	
R342			RK73FB2A564J	CHIP R 560K J 1/10W	
R343,344			RK73GB1J104J	CHIP R 100K J 1/16W	
R345			RK73GB1J102J	CHIP R 1.0K J 1/16W	
R346-349			RK73GB1J103J	CHIP R 10K J 1/16W	
R350-355			RK73GB1J101J	CHIP R 100 J 1/16W	
R356			R92-0679-05	CHIP R 0 OHM	
R357			R92-1252-05	CHIP R 0 OHM J 1/16W	
R358			RK73GB1J101J	CHIP R 100 J 1/16W	
R359			RK73GB1J103J	CHIP R 10K J 1/16W	
R360			RK73GB1J221J	CHIP R 220 J 1/16W	
R361			RK73GB1J102J	CHIP R 1.0K J 1/16W	
R362			RK73GB1J272J	CHIP R 2.7K J 1/16W	
R366			R92-1252-05	CHIP R 0 OHM J 1/16W	
R367			RK73FB2A333J	CHIP R 33K J 1/10W	
R368			RK73GB1J473J	CHIP R 47K J 1/16W	
R369			R92-1252-05	CHIP R 0 OHM J 1/16W	
R373			RK73GB1J101J	CHIP R 100 J 1/16W	
R375			RK73GB1J101J	CHIP R 100 J 1/16W	
R376			RK73GB1J102J	CHIP R 1.0K J 1/16W	
R377			RK73GB1J224J	CHIP R 220K J 1/16W	
R378			RK73GB1J104J	CHIP R 100K J 1/16W	
R379,380			RK73GB1J393J	CHIP R 39K J 1/16W	
R381			RK73FB2A684J	CHIP R 680K J 1/10W	
R382			RK73FB2A154J	CHIP R 150K J 1/10W	
R383			RK73GB1J103J	CHIP R 10K J 1/16W	
R384			R92-1252-05	CHIP R 0 OHM J 1/16W	
R385-388			RK73FB2A101J	CHIP R 100 J 1/10W	
R389-393			RK73GB1J104J	CHIP R 100K J 1/16W	
R394			RK73GB1J222J	CHIP R 2.2K J 1/16W	
R395-398			RK73GB1J104J	CHIP R 100K J 1/16W	
R399			RK73GB1J563J	CHIP R 56K J 1/16W	
R400			RK73GB1J153J	CHIP R 15K J 1/16W	
R401			RK73FB2A4R7J	CHIP R 4.7 J 1/10W	
R402			RK73GB1J103J	CHIP R 10K J 1/16W	
R403			RK73GB1J104J	CHIP R 100K J 1/16W	
R404			RK73FB2A472J	CHIP R 4.7K J 1/10W	
R405			RK73FB2A273J	CHIP R 27K J 1/10W	
R406			RK73FB2A101J	CHIP R 100 J 1/10W	
R407			RK73FB2A473J	CHIP R 47K J 1/10W	
R408			RK73FB2A4R7J	CHIP R 4.7 J 1/10W	
R413			R92-0670-05	CHIP R 0 OHM	
R414			RK73GB1J472J	CHIP R 4.7K J 1/16W	
R415			RK73FB2A680J	CHIP R 68 J 1/10W	
R416			RK73GB1J562J	CHIP R 5.6K J 1/16W	
R417			RK73GB1J153J	CHIP R 15K J 1/16W	
R418			RK73GB1J105J	CHIP R 1.0M J 1/16W	
R419			RK73FB2A101J	CHIP R 100 J 1/10W	
R420			RK73GB1J562J	CHIP R 5.6K J 1/16W	
R421,422			R92-0670-05	CHIP R 0 OHM	
R423			RK73GB1J682J	CHIP R 6.8K J 1/16W	
R424			RK73FB2A103J	CHIP R 10K J 1/10W	
R535			RK73GB1J330J	CHIP R 33 J 1/16W	
R536			RK73GB1J562J	CHIP R 5.6K J 1/16W	
R537			RK73GB1J103J	CHIP R 10K J 1/16W	
R538			RK73GB1J330J	CHIP R 33 J 1/16W	
R539			RK73GB1J101J	CHIP R 100 J 1/16W	
R540			RK73GB1J221J	CHIP R 220 J 1/16W	
R541			RK73GB1J101J	CHIP R 100 J 1/16W	
R542			RK73GB1J471J	CHIP R 470 J 1/16W	
R543			RK73FB2A100J	CHIP R 10 J 1/10W	
R544			RK73GB1J471J	CHIP R 470 J 1/16W	
R545			RK73GB1J102J	CHIP R 1.0K J 1/16W	
R546			RK73GB1J183J	CHIP R 18K J 1/16W	
R547			RK73GB1J122J	CHIP R 1.2K J 1/16W	
R548			RK73FB2A102J	CHIP R 1.0K J 1/10W	
R549			RK73GB1J683J	CHIP R 68K J 1/16W	
R550			RK73FB2A182J	CHIP R 1.8K J 1/10W	
R551			RK73GB1J151J	CHIP R 150 J 1/16W	
R552			RK73FB2A102J	CHIP R 1.0K J 1/10W	
R553			RK73FB2A221J	CHIP R 220 J 1/10W	
R554			RK73GB1J122J	CHIP R 1.2K J 1/16W	
R555			RK73GB1J331J	CHIP R 330 J 1/16W	
R556			RK73GB1J101J	CHIP R 100 J 1/16W	
R557			RK73GB1J822J	CHIP R 8.2K J 1/16W	
R558			RK73GB1J272J	CHIP R 2.7K J 1/16W	
R559			RK73GB1J471J	CHIP R 470 J 1/16W	
R560			RK73GB1J101J	CHIP R 100 J 1/16W	
R561,562			RK73GB1J472J	CHIP R 4.7K J 1/16W	
R563			RK73GB1J101J	CHIP R 100 J 1/16W	
R564			RK73FB2A101J	CHIP R 100 J 1/10W	
R565			RK73GB1J101J	CHIP R 100 J 1/16W	
R566			RK73GB1J471J	CHIP R 470 J 1/16W	
R567			RK73GB1J223J	CHIP R 22K J 1/16W	
R568			RK73GB1J103J	CHIP R 10K J 1/16W	
R569			RK73GB1J561J	CHIP R 560 J 1/16W	
R570			RK73FB2A103J	CHIP R 10K J 1/10W	
R571			RK73FB2A153J	CHIP R 15K J 1/10W	
R572			RK73FB2A101J	CHIP R 100 J 1/10W	
R573			RK73FB2A221J	CHIP R 220 J 1/10W	
R574			RK73GB1J102J	CHIP R 1.0K J 1/16W	
R575			R92-1252-05	CHIP R 0 OHM J 1/16W	
R576			RK73GB1J681J	CHIP R 680 J 1/16W	
R577			RK73GB1J101J	CHIP R 100 J 1/16W	
R578			RK73GB1J391J	CHIP R 390 J 1/16W	

PARTS LIST

TX-RX UNIT (X57-4660-21)

Ref. No.	Address	New parts	Parts No.	Description	Destination
R579			RK73GB1J223J	CHIP R 22K J 1/16W	
R580			RK73GB1J103J	CHIP R 10K J 1/16W	
R581			RK73GB1J220J	CHIP R 22 J 1/16W	
R582			RK73GB1J101J	CHIP R 100 J 1/16W	
R583			RK73GB1J471J	CHIP R 470 J 1/16W	
R584			R92-1252-05	CHIP R 0 OHM J 1/16W	
R585			RK73GB1J470J	CHIP R 47 J 1/16W	
R586			RK73FB2A222J	CHIP R 2.2K J 1/10W	
R587			RK73GB1J561J	CHIP R 560 J 1/16W	
R588			RK73GB1J223J	CHIP R 22K J 1/16W	
R589			RK73GB1J103J	CHIP R 10K J 1/16W	
R590			RK73GB1J101J	CHIP R 100 J 1/16W	
R591			RK73GB1J471J	CHIP R 470 J 1/16W	
R592			RK73FB2A223J	CHIP R 22K J 1/10W	
R593			RK73FB2A103J	CHIP R 10K J 1/10W	
R594			RK73FB2A821J	CHIP R 820 J 1/10W	
R595			RK73FB2A101J	CHIP R 100 J 1/10W	
R596			RK73FB2A473J	CHIP R 47K J 1/10W	
R597			RK73GB1J473J	CHIP R 47K J 1/16W	
R598,599			RK73GB1J101J	CHIP R 100 J 1/16W	
R600			RK73FB2A102J	CHIP R 1.0K J 1/10W	
R601			RK73GB1J332J	CHIP R 3.3K J 1/16W	
R602			RK73GB1J223J	CHIP R 22K J 1/16W	
R603			RK73GB1J103J	CHIP R 10K J 1/16W	
R604			RK73GB1J101J	CHIP R 100 J 1/16W	
R605			RK73GB1J471J	CHIP R 470 J 1/16W	
R606			RK73GB1J332J	CHIP R 3.3K J 1/16W	
R607			RK73GB1J223J	CHIP R 22K J 1/16W	
R608			RK73GB1J103J	CHIP R 10K J 1/16W	
R609			RK73GB1J101J	CHIP R 100 J 1/16W	
R610			RK73GB1J471J	CHIP R 470 J 1/16W	
R611			RK73GB1J470J	CHIP R 47 J 1/16W	
R612			RK73GB1J123J	CHIP R 12K J 1/16W	
R613			RK73FB2A472J	CHIP R 4.7K J 1/10W	
R615			RK73FB2A681J	CHIP R 680 J 1/10W	
R616			RK73FB2A103J	CHIP R 10K J 1/10W	
R617			RK73FB2A153J	CHIP R 15K J 1/10W	
R618			RK73FB2A101J	CHIP R 100 J 1/10W	
R619			RK73FB2A221J	CHIP R 220 J 1/10W	
R620			RK73FB2A102J	CHIP R 1.0K J 1/10W	
R621			R92-1252-05	CHIP R 0 OHM J 1/16W	
R622			RK73GB1J681J	CHIP R 680 J 1/16W	
R623			RK73GB1J223J	CHIP R 22K J 1/16W	
R624			RK73GB1J103J	CHIP R 10K J 1/16W	
R625			RK73GB1J101J	CHIP R 100 J 1/16W	
R626			RK73GB1J471J	CHIP R 470 J 1/16W	
R627			RK73GB1J332J	CHIP R 3.3K J 1/16W	
R628			RK73GB1J101J	CHIP R 100 J 1/16W	
R629			RK73GB1J271J	CHIP R 270 J 1/16W	
R630			RK73GB1J821J	CHIP R 820 J 1/16W	
R631			RK73GB1J104J	CHIP R 100K J 1/16W	
R632			RK73FB2A223J	CHIP R 22K J 1/10W	
R633			RK73FB2A103J	CHIP R 10K J 1/10W	
R634			RK73FB2A222J	CHIP R 2.2K J 1/10W	
R635			RK73FB2A101J	CHIP R 100 J 1/10W	
R636,637			RK73FB2A473J	CHIP R 47K J 1/10W	
R638,639			RK73FB2A101J	CHIP R 100 J 1/10W	
R640			RK73FB2A102J	CHIP R 1.0K J 1/10W	
R641			RK73FB2A681J	CHIP R 680 J 1/10W	
R642			RK73FB2A101J	CHIP R 100 J 1/10W	

Ref. No.	Address	New parts	Parts No.	Description	Destination
R643			RK73FB2A471J	CHIP R 470 J 1/10W	
R644			RK73FB2A681J	CHIP R 680 J 1/10W	
R645			RK73FB2A101J	CHIP R 100 J 1/10W	
R646			RK73FB2A471J	CHIP R 470 J 1/10W	
R647			RK73FB2A271J	CHIP R 270 J 1/10W	
R648			RK73FB2A184J	CHIP R 180K J 1/10W	
R649			RK73FB2A102J	CHIP R 1.0K J 1/10W	
R650			R92-1252-05	CHIP R 0 OHM J 1/16W	
R651-659			RK73GB1J101J	CHIP R 100 J 1/16W	
R661			RK73GB1J682J	CHIP R 6.8K J 1/16W	
R662			RK73GB1J271J	CHIP R 270 J 1/16W	
R663			RK73GB1J332J	CHIP R 3.3K J 1/16W	
R665			RK73GB1J682J	CHIP R 6.8K J 1/16W	
R666			RK73GB1J271J	CHIP R 270 J 1/16W	
R667			RK73GB1J332J	CHIP R 3.3K J 1/16W	
R669			RK73GB1J682J	CHIP R 6.8K J 1/16W	
R670			RK73GB1J271J	CHIP R 270 J 1/16W	
R671,672			RK73GB1J332J	CHIP R 3.3K J 1/16W	
R673,674			RK73GB1J472J	CHIP R 4.7K J 1/16W	
R675			RK73GB1J470J	CHIP R 47 J 1/16W	
R676			RK73GB1J471J	CHIP R 470 J 1/16W	
R677			RK73FB2A223J	CHIP R 22K J 1/10W	
R679			R92-1252-05	CHIP R 0 OHM J 1/16W	
R680			RK73FB2A103J	CHIP R 10K J 1/10W	
R681			RK73GB1J561J	CHIP R 560 J 1/16W	
R682,683			RD14CB2C100J	RD 10 J 1/6W	
R684-686			RK73GB1J101J	CHIP R 100 J 1/16W	
R687			RK73GB1J681J	CHIP R 680 J 1/16W	
R688			RK73GB1J123J	CHIP R 12K J 1/16W	
R689			RK73GB1J103J	CHIP R 10K J 1/16W	
R690			RK73GB1J561J	CHIP R 560 J 1/16W	
R800			RK73FB2A221J	CHIP R 220 J 1/10W	
R801			RK73FB2A102J	CHIP R 1.0K J 1/10W	
R802			RK73GB1J103J	CHIP R 10K J 1/16W	
R803			RK73GB1J102J	CHIP R 1.0K J 1/16W	
R804			RK73GB1J223J	CHIP R 22K J 1/16W	
R805			RK73FB2A333J	CHIP R 33K J 1/10W	
R806			RK73GB1J683J	CHIP R 68K J 1/16W	
R807			RK73GB1J103J	CHIP R 10K J 1/16W	
R808			RK73FB2A103J	CHIP R 10K J 1/10W	
R809			RK73GB1J152J	CHIP R 1.5K J 1/16W	
R810			RK73FB2A102J	CHIP R 1.0K J 1/10W	
R811			RK73GB1J333J	CHIP R 33K J 1/16W	
R812			RK73FB2A221J	CHIP R 220 J 1/10W	
R813			RK73FB2A103J	CHIP R 10K J 1/10W	
R814			RK73GB1J102J	CHIP R 1.0K J 1/16W	
R815			RK73GB1J563J	CHIP R 56K J 1/16W	
R816			RK73GB1J101J	CHIP R 100 J 1/16W	
R817			RK73GB1J681J	CHIP R 680 J 1/16W	
R818			RK73GB1J682J	CHIP R 6.8K J 1/16W	
R819			R92-1252-05	CHIP R 0 OHM J 1/16W	
R820-823			R92-0679-05	CHIP R 0 OHM	
R900			RK73GB1J103J	CHIP R 10K J 1/16W	
R901			RK73GB1J101J	CHIP R 100 J 1/16W	
R902			RK73GB1J104J	CHIP R 100K J 1/16W	
R903			RK73GB1J223J	CHIP R 22K J 1/16W	
R904			RK73GB1J562J	CHIP R 5.6K J 1/16W	
R905			RK73GB1J561J	CHIP R 560 J 1/16W	
R906			RK73GB1J103J	CHIP R 10K J 1/16W	
R907			RK73GB1J101J	CHIP R 100 J 1/16W	

PARTS LIST

TX-RX UNIT (X57-4660-21)

Ref. No.	Address	New parts	Parts No.	Description	Destination
R908			RK73GB1J104J	CHIP R 100K J 1/16W	
R909,910			RK73GB1J103J	CHIP R 10K J 1/16W	
R911,912			RK73GB1J105J	CHIP R 1.0M J 1/16W	
R913			RK73GB1J103J	CHIP R 10K J 1/16W	
R915			RK73GB1J103J	CHIP R 10K J 1/16W	
R916			RK73GB1J105J	CHIP R 1.0M J 1/16W	
R917			RK73GB1J474J	CHIP R 470K J 1/16W	
R918			RK73GB1J103J	CHIP R 10K J 1/16W	
R919			RK73GB1J471J	CHIP R 470 J 1/16W	
R920			RK73FB2A103J	CHIP R 10K J 1/10W	
VR1		✻	R32-0752-05	SEMI FIXED VARIABLE RESISTOR (4.7K)	
VR2			R32-0758-05	SEMI FIXED VARIABLE RESISTOR (47K)	
VR3		✻	R32-0767-05	SEMI FIXED VARIABLE RESISTOR (1.0K)	
VR4			R32-0758-05	SEMI FIXED VARIABLE RESISTOR (47K)	
VR6-8			R32-0754-05	SEMI FIXED VARIABLE RESISTOR (10K)	
VR9,10			R12-6744-05	TRIMMING POT. (47K)	
VR11			R12-6740-05	TRIMMING POT. (10K)	
VR12			R32-0754-05	SEMI FIXED VARIABLE RESISTOR (10K)	
VR14			R12-6744-05	TRIMMING POT. (47K)	
VR900			R12-3127-05	TRIMMING POT. (10K)	
VR901			R12-1084-05	TRIMMING POT. (1K)	
VR902			R12-3127-05	TRIMMING POT. (10K)	
D1			V08(G)	DIODE	
D2,3			RLS245	DIODE	
D4			V08(G)	DIODE	
D5			1SV128	DIODE	
D6			LFB01	DIODE	
D7-26			RLS135	DIODE	
D27-29			1SS355	DIODE	
D30,31			DAN235K	DIODE	
D32			DAP236K	DIODE	
D33			RLS135	DIODE	
D34			DAN235K	DIODE	
D35			RLS135	DIODE	
D36			DAP236K	DIODE	
D37			DAN235K	DIODE	
D38-43			DAP236K	DIODE	
D44			1SS355	DIODE	
D47			1SS355	DIODE	
D48			RN731H	DIODE	
D49			1SS355	DIODE	
D50			RLS135	DIODE	
D51			LFB01	DIODE	
D52-55			HSM88AS	DIODE	
D56			RLS135	DIODE	
D59			HSM88AS	DIODE	
D60,61			1SS355	DIODE	
D63			HSM88AS	DIODE	
D64			1SS226	DIODE	
D65			02CZ6.2(Y)	ZENER DIODE	
D66			RLS245	DIODE	
D68		✻	02CZ3.6(Z)	ZENER DIODE	
D69,70			1SS355	DIODE	
D71		✻	02CZ12(Y)	ZENER DIODE	
D72			1SS355	DIODE	
D73			HSM88AS	DIODE	
D75			02CZ3.3(Z)	ZENER DIODE	
D76			HSM88AS	DIODE	
D79			1SS355	DIODE	

Ref. No.	Address	New parts	Parts No.	Description	Destination
D80			02CZ4.7(Y)	ZENER DIODE	
D81-87			1SS355	DIODE	
D500,501			1SS355	DIODE	
D502			1SV166	VARIABLE CAPACITANCE DIODE	
D503			RLS135	DIODE	
D504			1SV166	VARIABLE CAPACITANCE DIODE	
D505			RLS135	DIODE	
D506			1SV166	VARIABLE CAPACITANCE DIODE	
D507			RLS135	DIODE	
D800			HSM276S	DIODE	
D900-902			1SS355	DIODE	
IC1			BU4066BCFV	MOS-IC	
IC2			NJM2904M	MOS-IC	
IC3			BU4066BCFV	MOS-IC	
IC4		✻	NJM2594V	ANALOGUE IC	
IC6			TA8184F	MOS-IC	
IC7			LA4446	BI-POLAR IC	
IC8			TC4S66F	MOS-IC	
IC9			UPC1313HA	ANALOGUE IC	
IC10			UPD6345GS	MOS-IC	
IC11			TA78L05F	MOS-IC	
IC12			NJM2904M	MOS-IC	
IC13			M62363FP	MOS-IC	
IC14			NJM2904M	MOS-IC	
IC15,16			BU2099FV	MOS-IC	
IC500,501			F71022Z	MOS-IC	
IC502			MB86001PF	MOS-IC	
IC503,504		✻	NJM2594V	ANALOGUE IC	
IC505			UPC1686G	BI-POLAR IC	
IC506		✻	NJM2594V	ANALOGUE IC	
IC508			TC4S66F	MOS-IC	
IC900			NJM2904M	MOS-IC	
IC901		✻	TC4001BFT	MOS-IC	
Q1			2SD1757K	TRANSISTOR	
Q2			2SA1213(Y)	TRANSISTOR	
Q3			DTC143TK	DIGITAL TRANSISTOR	
Q4-9			2SK520(K44)	FET	
Q10			3SK131(M)	FET	
Q11,12			2SK520(K43)	FET	
Q13			2SC2954	TRANSISTOR	
Q14			DTA124EK	DIGITAL TRANSISTOR	
Q15			FMG3A	DIGITAL TRANSISTOR	
Q17			2SA1213(Y)	TRANSISTOR	
Q18			RU201	TRANSISTOR	
Q19			3SK131(M)	FET	
Q20,21			2SC2712(Y)	TRANSISTOR	
Q22			FMC2	DIGITAL TRANSISTOR	
Q23			2SC2712(Y)	TRANSISTOR	
Q24-28			3SK131(M)	FET	
Q29			2SC2954	TRANSISTOR	
Q30,31			3SK131(M)	FET	
Q32-35			2SC2712(Y)	TRANSISTOR	
Q36			DTC114EK	DIGITAL TRANSISTOR	
Q38			DTC114EK	DIGITAL TRANSISTOR	
Q39			2SC2712(Y)	TRANSISTOR	
Q40			2SK208(GR)	FET	
Q46			DTC114EK	DIGITAL TRANSISTOR	
Q47			DTA124EK	DIGITAL TRANSISTOR	
Q48			2SC2712(Y)	TRANSISTOR	
Q49			2SD1757K	TRANSISTOR	

PARTS LIST

TX-RX UNIT (X57-4660-21)
LCD ASSY (B38-0739-15)

Ref. No.	Address	New parts	Parts No.	Description	Destination
Q50,51			2SC2712(Y)	TRANSISTOR	
Q52			DTC114EK	DIGITAL TRANSISTOR	
Q54,55			2SC2712(Y)	TRANSISTOR	
Q56			2SA1162(Y)	TRANSISTOR	
Q57			2SC2712(Y)	TRANSISTOR	
Q58			2SC3649(S,T)	TRANSISTOR	
Q59			2SD1624(S)	TRANSISTOR	
Q60-63			2SC2712(Y)	TRANSISTOR	
Q64			2SK208(GR)	FET	
Q65			2SC2712(Y)	TRANSISTOR	
Q67,68			DTC114EK	DIGITAL TRANSISTOR	
Q69			FMC1	DIGITAL TRANSISTOR	
Q70			DTC143TK	DIGITAL TRANSISTOR	
Q71			2SA1213(Y)	TRANSISTOR	
Q72			FMG3A	DIGITAL TRANSISTOR	
Q74			2SA1213(Y)	TRANSISTOR	
Q75			2SC2712(Y)	TRANSISTOR	
Q76			DTA124EK	DIGITAL TRANSISTOR	
Q77,78			FMA5	TRANSISTOR	
Q79			2SC2712(Y)	TRANSISTOR	
Q80			DTA114EK	DIGITAL TRANSISTOR	
Q81-84			DTC114EK	DIGITAL TRANSISTOR	
Q85			DTC143TK	DIGITAL TRANSISTOR	
Q507			2SC2714(Y)	TRANSISTOR	
Q508-510			2SC3722K(R)	TRANSISTOR	
Q511			2SC2714(Y)	TRANSISTOR	
Q512			2SC2712(Y)	TRANSISTOR	
Q513			2SC2714(Y)	TRANSISTOR	
Q514			2SC2712(GR)	TRANSISTOR	
Q515,516			2SC2712(Y)	TRANSISTOR	
Q517-521			2SC2714(Y)	TRANSISTOR	
Q522			2SC2712(GR)	TRANSISTOR	
Q523			2SC2712(Y)	TRANSISTOR	
Q524-526			2SC2714(Y)	TRANSISTOR	
Q527,528			2SC2996(Y)	TRANSISTOR	
Q529			2SC2712(Y)	TRANSISTOR	
Q530			DTC114EK	DIGITAL TRANSISTOR	
Q531			2SK508NV(K52)	FET	
Q532			DTC114EK	DIGITAL TRANSISTOR	
Q533			2SK508NV(K52)	FET	
Q534			DTC114EK	DIGITAL TRANSISTOR	
Q535			2SK508NV(K52)	FET	
Q536			2SC2714(Y)	TRANSISTOR	
Q800			DTC114EK	DIGITAL TRANSISTOR	
Q801,802			2SC2714(Y)	TRANSISTOR	
Q803			2SC2712(Y)	TRANSISTOR	
Q804			2SC2714(Y)	TRANSISTOR	
Q805			2SC2712(Y)	TRANSISTOR	
Q806			2SC2714(Y)	TRANSISTOR	
Q807			DTA114EK	DIGITAL TRANSISTOR	
Q808			DTC114EK	DIGITAL TRANSISTOR	
Q900,901			2SC2712(Y)	TRANSISTOR	
Q902			DTA114EK	DIGITAL TRANSISTOR	
Q903			DTC114EK	DIGITAL TRANSISTOR	
TH1			157-502-53002	THERMISTOR	
TH2			157-501-53009	THERMISTOR	
TH3			157-302-53008	THERMISTOR	
TH4			157-102-53003	THERMISTOR	
TH5			157-302-53008	THERMISTOR	
TH6			157-502-53002	THERMISTOR	
TH7			157-103-55001	THERMISTOR	
TH8,9			157-102-53003	THERMISTOR	
TH10			157-502-53002	THERMISTOR	
TH11			157-104-53001	THERMISTOR	

LCD ASSY (B38-0739-15)

Ref. No.	Address	New parts	Parts No.	Description	Destination
PL1-6			B30-2147-08	LAMP	
C1			CK73FB1H103K	CHIP C 0.010UF K	
C2			C92-0042-05	CHIP-ELE 22UF 10WV	
C3			CK73FB1H103K	CHIP C 0.010UF K	
C4,5			CK73FB1H102K	CHIP C 1000PF K	
C6-10			CK73FB1H103K	CHIP C 0.010UF K	
C11			C92-0034-05	CHIP-ELE 22UF 25WV	
C12,13			CK73FF1H104Z	CHIP C 0.10UF Z	
C14-19			CK73FB1H103K	CHIP C 0.010UF K	
C23			C92-0040-05	CHIP-ELE 47UF 16WV	
C24			C90-2041-05	CHIP-ELE 10UF 10WV	
-			E23-0623-04	EARTH LUG	
CN1			E40-5797-05	CONNECTOR	
CN2			E40-3240-05	CONNECTOR	
J1			E06-0858-15	CYLINDRICAL RECEPTACLE	
L1,2			L40-1011-18	SMALL FIXED INDUCTOR (100MH)	
L3			L40-1001-18	SMALL FIXED INDUCTOR (10MH)	
R1,2			RK73FB2A473J	CHIP R 47K J 1/10W	
R3			RK73FB2A104J	CHIP R 100K J 1/10W	
R4			RK73FB2A125J	CHIP R 1.2M J 1/10W	
R5,6			RK73FB2A223J	CHIP R 22K J 1/10W	
R7			RK73FB2A222J	CHIP R 2.2K J 1/10W	
R8			RK73FB2A101J	CHIP R 100 J 1/10W	
R9			RK73FB2A153J	CHIP R 15K J 1/10W	
R10			RK73FB2A222J	CHIP R 2.2K J 1/10W	
R11			RK73FB2A101J	CHIP R 100 J 1/10W	
R12			RK73FB2A153J	CHIP R 15K J 1/10W	
R13-15			RK73FB2A101J	CHIP R 100 J 1/10W	
R21-23			R92-1240-05	CHIP R 10 J 1/4W	
R24-27			RK73FB2A470J	CHIP R 47 J 1/10W	
R28,29			RK73FB2A122J	CHIP R 1.2K J 1/10W	
R30-32			R92-0670-05	CHIP R 0 OHM	
R34			RK73FB2A392J	CHIP R 3.9K J 1/10W	
R35			RK73EB2A332J	CHIP R 3.3K J 1/10W	
R36,37			R92-1282-05	CHIP R 10 J 1W	
VR1,3			R31-0609-05	VARIABLE RESISTOR (50KB:SQL,VOL)	
VR2			R31-0610-05	VARIABLE RESISTOR (50KB:CLA)	
S2-7			S40-1428-05	TACT SWITCH	
D2			IMN10	DIODE	
IC1			MSM5265GS-V1K	IC (LCD DRIVER)	
IC2			TA7809F	IC (VOLTAGE REGURATOR/+9V)	
LCD1			SLU10098-01	LCD	
S1			W02-1873-05	ENCODER	

EXPLODED VIEW

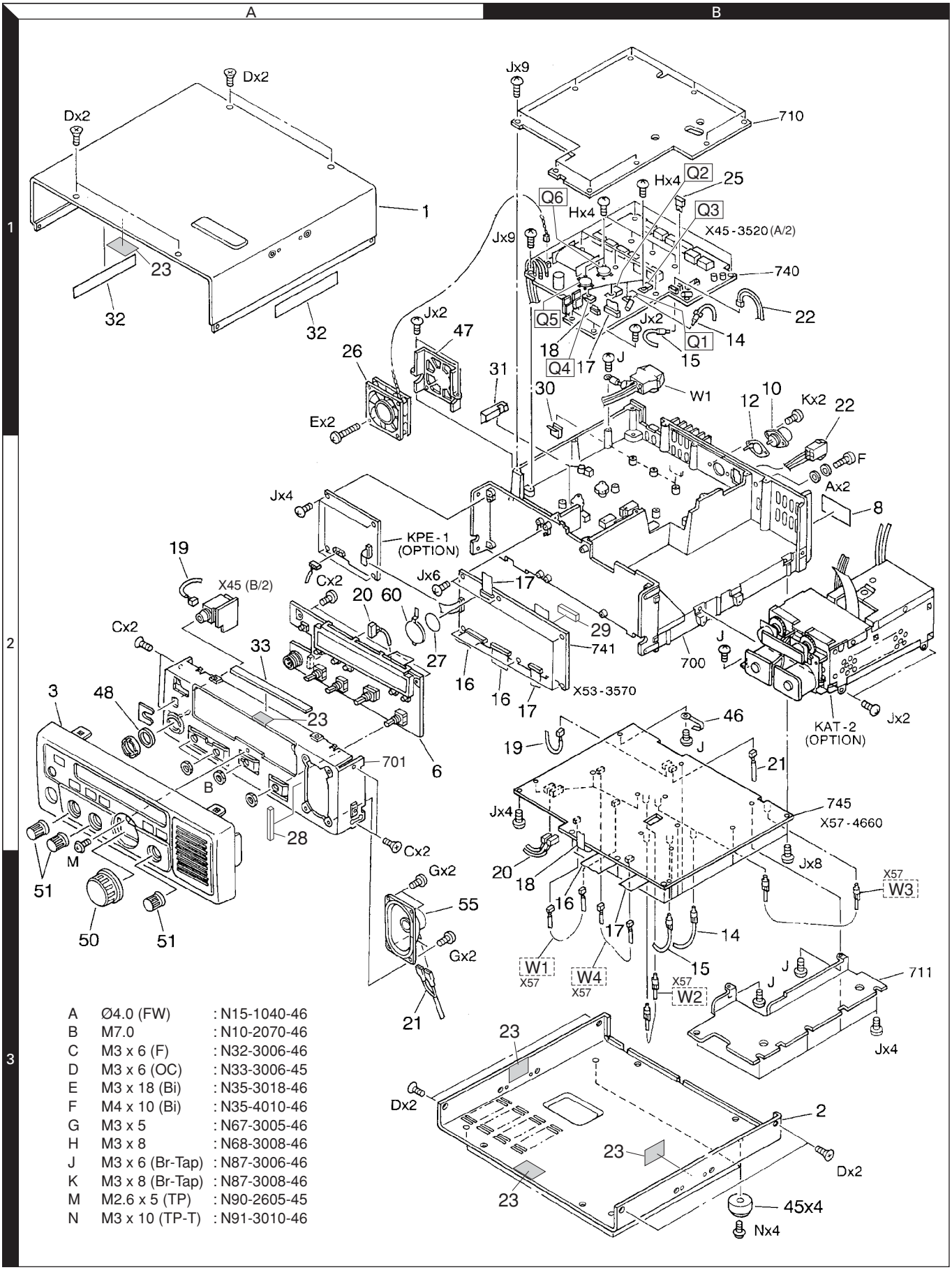

A	Ø4.0 (FW)	: N15-1040-46
B	M7.0	: N10-2070-46
C	M3 x 6 (F)	: N32-3006-46
D	M3 x 6 (OC)	: N33-3006-45
E	M3 x 18 (Bi)	: N35-3018-46
F	M4 x 10 (Bi)	: N35-4010-46
G	M3 x 5	: N67-3005-46
H	M3 x 8	: N68-3008-46
J	M3 x 6 (Br-Tap)	: N87-3006-46
K	M3 x 8 (Br-Tap)	: N87-3008-46
M	M2.6 x 5 (TP)	: N90-2605-45
N	M3 x 10 (TP-T)	: N91-3010-46

Parts with the exploded numbers larger than 700 are not supplied.
If a part reference number is listed in a box on the exploded view of the PCB, that part does not come with the PCB.
These parts must be ordered separately.

PACKING

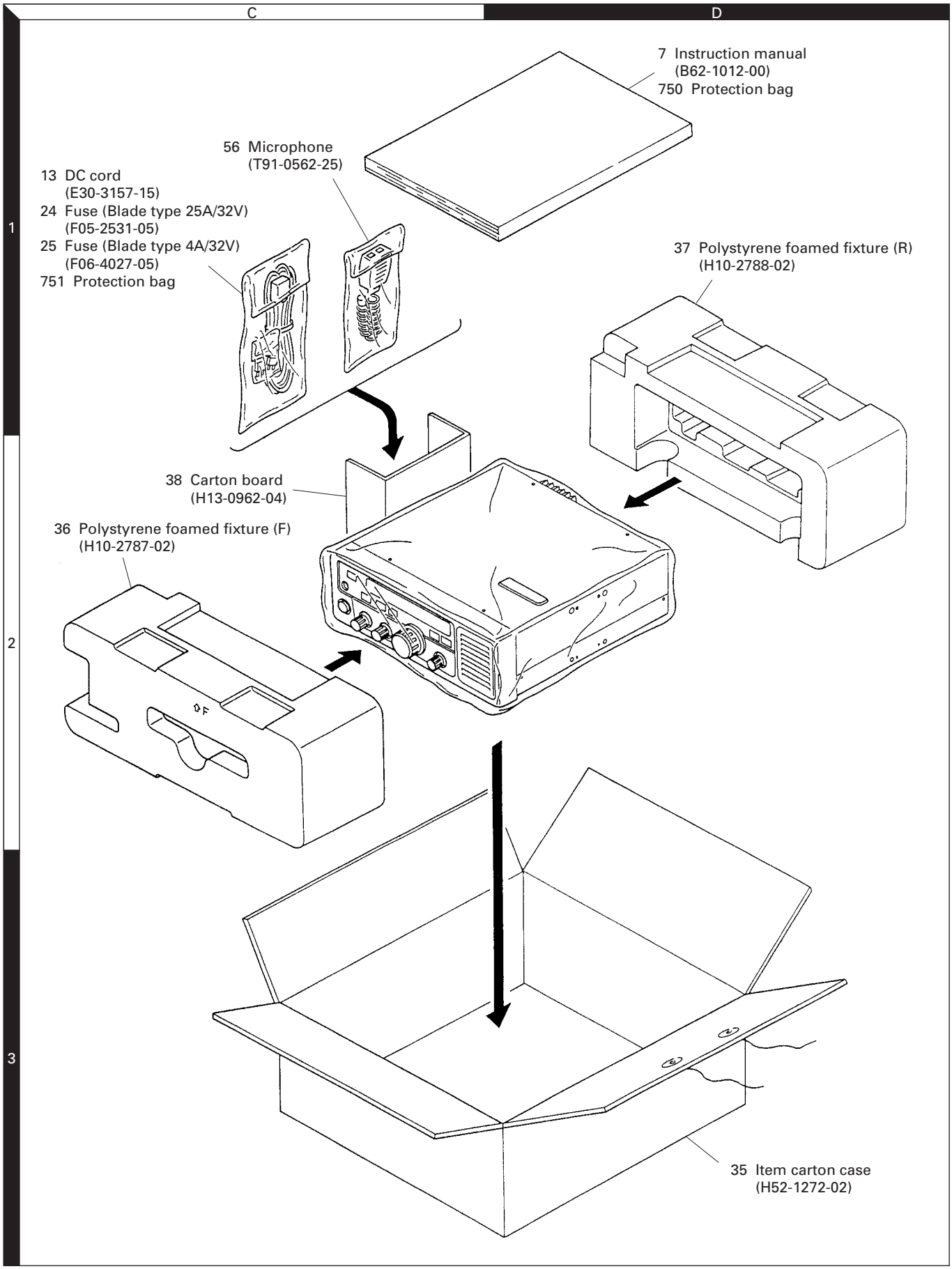

Parts with the exploded numbers larger than 700 are not supplied.

ADJUSTMENT

Required Test Equipment

1. Stabilized Power Supply
1) The supply voltage can be changed between 5V and 18V, and the current is 30A or more.
2) The standard voltage is 13.6V.

2. DC Ammeter
1) Class 1 ammeter (17 ranges and other features).
2) The full scale can be set to either 3A or 30A.
3) A cable of less internal loss must be used.

3. Frequency Counter (f. counter)
1) Frequencies of up to 1GHz or so can be measured.
2) The sensitivity can be changed to 500MHz or below, and measurements are highly stable and accurate (0.2ppm or so).

4. Power Meter
1) Measurable frequency : Up to 500MHz
2) Impedance : 50Ω, unbalanced
3) Measuring range : Full scale of 150W or so
4) A standard cable (5D2W 1m) must be used.

5. RF VTVM (RF V.M)
1) Measurable frequency : Up to 500Hz or so

6. Digital Voltmeter (D.V.M)
1) Voltage range : FS = 18V or so
2) Input resistance : 1MΩ or more

7. Oscilloscope
1) Measuring range : DC to 100MHz
2) Provides highly accurate measurements for 5 to 25MHz.

8. AF Voltmeter (AF V.M)
1) Measurable frequency : 50Hz to 1MHz
2) Maximum sensitivity : 1mV or more

9. AF Generator (AG)
1) Frequency range : 200Hz to 5kHz
2) Output : 1mV or less to 1V, low distortion

10. Spectrum Analyzer
1) Measuring range : DC to 1GHz or more

11. Standard Signal Generator (SSG)
1) Maximum frequency : 500MHz or more
2) Output : –20dB/0.1μV to 120dB/1V
3) Output impedance : 50Ω

12. Tracking Generator
1) Center frequency : 50kHz to 500MHz
2) Frequency deviation : ±35MHz
3) Output voltage : 100mV or more

13. Dummy Load (DM)
1) AF Dummy 4Ω, 5W or more
2) RF Dummy 150Ω, 150W or more

14. Directional Coupler
- Use a non-conductive rod such as a Bakelite rod for adjustment (especially of trimmers and coils).
- To protect the SSG, do not send out signals while adjusting the receiving unit.
- The indicated SSG output levels are for maximum output.

Service Adjustment Mode

1. Function
1) Service adjustment mode is only to set the adjustment items displayed in the service adjustment mode menu.
2) Adjusted data is all stored in the EEPROM.
3) The EEPROM is only renewed when MENU No. 39 is entered and writing done by means of [MODE] or [DATA].

2. Setting
1) [POWER] ON while holding [SCAN] and [DATA].
2) Use [DIAL] to select the MENU No.
3) Set the data using [MODE] or [DATA].
4) MENU No. 39 writes data to the EEPROM.
"RUN" is displayed while writing.
"GOOD" is displayed when writing has been successfully completed.
"ERROR" is displayed when a writing error occurs.
(At this time, press [MODE] or [DATA] once again.)
5) This function is turned off by turning [POWER] OFF.

NOTE:
When repairing X53-3570-21 board, you may find the shortness of the flat cable makes checking the unit difficult. We provide the E37-0572-05 (for control unit) and the E37-0573-05 (for AT) cables as servicing parts which you may order as necessary.

3. Adjustment mode menu (Menu No. 00~39)

No.	Contents
00	Checksum display
01	100W (MAX) power setting, RF meter 100W point intake
02	50W (HI) power setting, RF meter 50W point intake
03	25W (MID) power setting, RF meter 25W point intake
04	15W (LO) power setting, RF meter 15W point intake
05	12.5W (HI) power setting, RF meter 12.5W point intake
06	Power setting during AT
07	6.25W (MID) power setting, RF meter 6.25W point intake
08	3.75W (LO) power setting, RF meter 3.75W point intake
09	100W power setting TX gain, RF meter 100W point intake
10	50W power setting TX gain, RF meter 50W point intake
11	25W power setting TX gain, RF meter 25W point intake
12	TX gain setting during 15W, RF meter 15W point intake
13	TX gain setting during AT
14	TX gain setting during 25W
15	TX gain setting during 12.5W
16	TX gain setting during 6.25W
17	TX gain setting during 3.75W
18	SSB microphone sensitivity setting
19	AM microphone sensitivity setting

ADJUSTMENT

No.	Contents
20	Microphone sensitivity f compensation (f<8.0MHz)
21	Microphone sensitivity f compensation (8.0MHz≤f<21.5MHz)
22	Microphone sensitivity f compensation (21.5MHz≤f)
23	SWR protection setting
24	SWR, 3 setting (for display, AT control)
25	CW carrier level setting
26	AM carrier level setting
27	LSB carrier compensation
28	USB carrier compensation
29	S-meter, deflection start level setting (for display)
30	S-meter, S9 deflection level setting (for display)
31	S-meter, S9+40dB deflection start level setting (for display)
32	Squelch level setting (threshold)
33	SQL volume center compensation
34	CLARI volume center compensation
35	TX LPF non-selection
36	LCD total illumination
37	BEEP level verification
38	Sidetone level verification
39	Write to EEPROM

4. Memory frequency configuration

M CH	Frequency	Mode	M CH	Frequency	Mode
01	7.250MHz	USB	25	14.250MHz	USB
02	500kHz	AM	26	14.200MHz	CW
03	10.499MHz	AM	27	14.250MHz	CW
04	10.500MHz	AM	28	1.800MHz	AM
05	21.499MHz	AM	29	2.200MHz	CW
06	21.500MHz	AM	30	4.000MHz	CW
07	29.999MHz	USB	31	7.000MHz	CW
08	14.150MHz	CW	32	12.750MHz	LSB
09	100kHz	CW	33	18.500MHz	USB
10	14.150MHz	CW	34	26.000MHz	USB
11	14.250MHz	CW	35	14.300MHz	USB
12	3.500MHz	CW	36	14.300MHz	CW
13	550kHz	AM	37	28.800MHz	LSB
14	1.550MHz	AM	38	14.050MHz	USB
15	1.800MHz	LSB	39	550kHz	AM
16	3.550MHz	LSB	40	2.100MHz	LSB
17	7.100MHz	LSB	41	3.500MHz	LSB
18	10.100MHz	LSB	42	6.500MHz	LSB
19	14.100MHz	USB	43	10.100MHz	CW
20	21.200MHz	USB	44	12.100MHz	USB
21	24.800MHz	USB	45	18.100MHz	USB
22	28.687MHz	USB	46	28.900MHz	USB
23	29.600MHz	CW	47	14.050MHz	USB
24	24.900MHz	CW	48	14.050MHz	AM

Preparation

Item	Condition	Measurement			Adjustment			Specifications/ Remarks
		Test-equipment	Unit	Terminal	Unit	Parts	Method	
1. Setting	1) DC IN: 13.6V CONT SW 1: ON CLARIFIER VR: Center SQL VR: Center							

ADJUSTMENT

PLL and CAR Section

Item	Condition	Measurement			Adjustment			Specifications/Remarks
		Test-equipment	Unit	Terminal	Unit	Parts	Method	
1. Reference frequency adjustment	1) M CH: 01	f. counter (probe 10 : 1)	TX-RX	TP501	TX-RX	TC501	20.00000MHz	±20Hz
2. 62.35MHz adjustment	1) M CH: 01			TP506		TC502	62.35000MHz	±20Hz
3. 10.695MHz adjustment	1) M CH: 01	Oscilloscope		TP503		L539	1.4Vp-p	±0.2Vp-p
4. 54MHz BPF adjustment	1) M CH: 01			TP505		L513 L514 L515	Repeat adjustment 2 to 3 times as the level of 26.5MHz. Level maximum	1.0Vp-p or more
5. VCO1 lock voltage check	1) M CH: 02	D.V.M		TP504	TX-RX	TC503	2.0V	±0.1V
	2) M CH: 03						Check	7.0V or less
6. VCO2 lock voltage check	1) M CH: 04				TX-RX	TC504	2.0V	±0.1V
	2) M CH: 05						Check	7.0V or less
7. VCO3 lock voltage check	1) M CH: 06				TX-RX	TC505	2.0V	±0.1V
	2) M CH: 07						Check	7.0V or less
8. LO1 level check	1) M CH: 08 Pull out CN501 (LO1). Insert CN501 after the check.	RF V.M 50Ω terminated		CN501			Level check	–0.5~+5.0dBm
9. LO2 (62.35MHz) level check	1) M CH: 08 Pull out CN502 (LO2). Insert CN502 after the check.			CN502	TX-RX	(L531)	Level check 0dBm or less: Maximum for L531	0~+3.0dBm

Receiver Section

Item	Condition	Measurement			Adjustment			Specifications/Remarks
		Test-equipment	Unit	Terminal	Unit	Parts	Method	
1. AGC adjustment	1) M CH: 08	D.V.M	TX-RX	TP2	TX-RX	VR6	2.9V	±0.03V
2. MCF adjustment	1) Pull out CN502 (LO2). M CH: 08 Spectrum analyzer setting TG level: –30dBm Center f.: 73.045MHz Frequency span: 70kHz ATT: 10dB V. REF: 2dB/DIV Insert CN502 after the check.	Spectrum analyzer Tracking generator		CN7 CN4		L38 L42 L43	Repeat adjustment 2 to 3 times to obtain a maximum gain. Adjust the waveform as shown to the right.	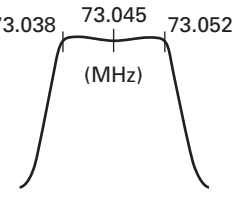

ADJUSTMENT

Item	Condition	Measurement			Adjustment			Specifications/Remarks
		Test-equipment	Unit	Terminal	Unit	Parts	Method	
3. IF AMP adjustment	1) M CH: 08 [DATA]: 1 push [MODE]: 1 push Mode: USB SSG f.: 14.151MHz SSG OUT: –113~–119dBm (0.501~0.25μV)	SSG AF V.M Oscilloscope DM. SP	Rear panel	ANT EXT.SP	TX-RX	L44 L48 L49 L51 L75 L76	Repeat adjustment 2 to 3 times. AF output: MAX	
4. MIX BAL adjustment	1) M CH: 09 AIP: OFF SSG OUT: OFF					VR1	Noise minimum	
5. IF GAIN adjustment	1) M CH: 10 SSG f.: 14.150MHz SSG OUT: –103dBm (1.58μV)				Front panel	AF VOL	AF output: 0.63V	
	2) SSG OUT: –113dBm (0.501μV)				TX-RX	VR4	AF output: 0.4V	±0.05V
	3) SSG OUT: –103dBm (1.58μV)						Check	0.63V±0.05V
6. S-meter adjustment S1	1) Power ON while holding the [SCAN] and [DATA] keys. (Service adjustment mode) Menu No.: 29 SSG f.: 14.101MHz SSG OUT: –107dBm (1μV)				Front panel	[MODE] or [DATA]	1 push	
S9	2) Menu No.: 30 SSG OUT: –81dBm (19.9μV)							
Full scale	3) Menu No.: 31 SSG OUT: –41dBm (1.99mV)							
7. SQL threshold adjustment	1) Menu No.: 32 SSG OUT: OFF SQL VR: Center						1 push	
8. SQL VR adjustment	1) Menu No.: 33 SSG OUT: OFF SQL VR: Center						1 push	
9. CLARI VR adjustment	1) Menu No.: 34 SSG OUT: OFF CRARI VR: Center						1 push	
10. Beep sound adjustment	1) Menu No.: 37				TX-RX	VR9	0.25V	±6dB
11. Sidetone adjustment	1) Menu No.: 38					VR10	0.2V	±6dB
12. ROM data writing	1) Turn the [DIAL] to select Menu No. 39.			Display (READY) → Press [MODE] or [DATA] → Write → Finish (GOOD)				
13. NB check	1) Press [MENU] key one time, set to the menu number "02" by pressing [DATA] or [MODE] key, and NB is ON for turning the [DIAL]. Adjust the noise generator to S1, S9 level, then check. After the check, press the [MENU] key one time.	Noise generator D.V.M					Check	Noise decreases

ADJUSTMENT

Item	Condition	Measurement			Adjustment			Specifications/Remarks
		Test-equipment	Unit	Terminal	Unit	Parts	Method	
14. S/N check	1) M CH: Following M CH AF VR: 0.45V/4Ω SSG f.: Following frequency (USB: +1kHz, LSB: –1kHz)	Radio tester or SSG AF V.M Oscilloscope DM. SP	Rear panel	ANT EXT.SP			S/N measurement	10dB or more AIP ON: Sensitivity down (5~10dB)

M CH	Frequency	Mode	SSG OUT	SSG MOD	DEV
13	550.0kHz	AM	–89dBm	1kHz	60%
14	1.550.0kHz	AM	–89dBm	1kHz	60%
15	1.800.0kHz	LSB	–119dBm	OFF	
16	3.550.0kHz	LSB	–119dBm	OFF	
17	7.100.0kHz	LSB	–119dBm	OFF	
18	10.100.0kHz	LSB	–119dBm	OFF	
19	14.100.0kHz	USB	–119dBm	OFF	
20	21.200.0kHz	USB	–119dBm	OFF	
21	24.800.0kHz	USB	–119dBm	OFF	
22	28.687.0kHz	USB	–119dBm	OFF	

Transmitter Section

Item	Condition	Measurement			Adjustment			Specifications/Remarks
		Test-equipment	Unit	Terminal	Unit	Parts	Method	
1. ALC voltage adjustment	1) M CH: 11 Transmit	D.V.M	TX-RX	TP1	TX-RX	VR12	2.7V	+0.05V, –0.10V
2. TX AMP adjustment	1) M CH: 11 Insert the measure cable to CN19. Transmit	50Ω terminated Oscilloscope or Spectrum analyzer		CN19		L60 L61 L63 L64 L65 L67 L69	Repeat adjustment 2 to 3 times. Level maximum	CAR at 14.250MHz: MAX
3. MIX BIAS adjustment	1) M CH: 11 Transmit					VR2	Level maximum	
4. CW/AM CAR level setting	1) Power ON while holding the [SCAN] and [DATA] keys. (Service adjustment mode) Menu No.: 25 Transmit	Spectrum analyzer		CN19	Front panel	[MODE] or [DATA]	9dBm	±1dB
	2) Menu No.: 26 Transmit						6.5dBm	±0.5dB
5. TGC adjustment	1) Menu No.: 10 Transmit						6dBm	±0.5dB
	2) Menu No.: 11 Transmit						3dBm	
	3) Menu No.: 12 Transmit						0.8dBm	

ADJUSTMENT

Item	Condition	Measurement			Adjustment			Specifications/Remarks
		Test-equipment	Unit	Terminal	Unit	Parts	Method	
6. ROM data writing	1) Turn the [DIAL] to select Menu No. 39.	Display (READY) → Press [MODE] or [DATA] → Write → Finish (GOOD)						
7. Idle current adjustment	1) M CH: 11 VR1, VR2 : MAX to counterclockwise Transmit	DC ammeter					Check the default current (I_0).	
					Final	VR1	I_0+250mA=I_1	
						VR2	I_1+250mA	
8. Fan operation check					Final	TH1	Both ends of TH1 are shorted.	Fan starts running, and ventilate to rear panel.
9. NULL adjustment	1) Insert the coaxial cable to CN19. M CH: 12 VR3: MAX to counterclockwise Low power Transmit	D.V.M Power meter	Final Rear panel	CN104 ANT	Final	TC1	Voltage minimum	Reference value: 50mV
10. Power adjustment 100W	1) Power ON while holding the [SCAN] and [DATA] keys. (Service adjustment mode) Menu No.: 01 Transmit	Power meter	Rear panel	ANT	Front panel	[MODE] or [DATA]	100W	±5.0W
50W	2) Menu No.: 02 Transmit						50W	±3.0W
25W	3) Menu No.: 03 Transmit						25W	±2.5W
15W	4) Menu No.: 04 Transmit						15W	±1.5W
12.5W	5) Menu No.: 05 Transmit						12.5W	±1.0W
10W	6) Menu No.: 06 Transmit						10W	±1.0W
6.25W	7) Menu No.: 07 Transmit						6.25W	±0.5W
3.75W	8) Menu No.: 08 Transmit RF meter data is also written at the same time as the above power adjustment.						3.75W	±0.5W
11. SSB microphone sensitivity adjustment	1) Menu No.: 18 AG: 1kHz/5mV Transmit	Power meter AG AF V.M	Rear panel Front panel	ANT MIC			60W	±5.0W
12. AM microphone sensitivity adjustment	1) Menu No.: 19 Transmit						Set the value, multiplying SSB microphone sensitivity adjustment value by the square root of 2.	
13. ROM data writing	1) Turn the [DIAL] to select Menu No. 39.	Display (READY) → Press [MODE] or [DATA] → Write → Finish (GOOD)						

ADJUSTMENT

Item	Condition	Measurement			Adjustment			Specifications/Remarks
		Test-equipment	Unit	Terminal	Unit	Parts	Method	
14. Power frequency response	1) M CH: 23 Transmit	Power meter	Rear panel	ANT	Final	VR3	Power maximum	95W or more
15. Spurious adjustment	1) M CH: 24 Transmit	Power meter Spectrum analyzer Coupler			TX-RX	VR3	Spurious minimum (Near ±1.6MHz)	–50dB or more
16. Suppression adjustment	1) M CH: 25 Set USB/LSB using [MODE] key. Transmit					VR7 VR8	CAR level minimum Repeat USB and LSB alternately, adjust CAR level to minimum.	–50dB or more
17. SWR protection adjustment	1) M CH: 26 150Ω dummy load connect. Transmit	150Ω dummy load Pass-through type power meter				VR14	40W	±4.0W
18. SWR 3.0 (for AT) adjustment	1) Power ON while holding the [SCAN] and [DATA] keys. (Service adjustment mode) Menu No.: 24 150Ω dummy load connect. Transmit				Front panel	[MODE] or [DATA]	1 push	
19. CAR point adjustment	1) Menu No.: 27 (LSB) Menu No.: 28 (USB) AG1: 300Hz/3mV AG2: 2700Hz/3mV Transmit	Power meter AG Oscilloscope Coupler					While observing the oscilloscope waveforms, adjust so the waveforms cross. At LSB or USB, adjust while pressing [MODE] or [DATA] key.	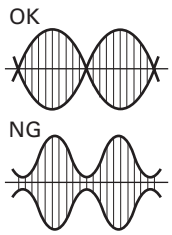
20. ROM data writing	1) Turn the [DIAL] to select Menu No. 39.	Display (READY) → Press [MODE] or [DATA] → Write → Finish (GOOD)						
21. Display check	1) Menu No.: 36						Check	LCD all segments light.
22. Transmit output power	1) Check for following frequency M CH: 28 (1.8MHz, AM) M CH: 31 (7MHz, CW) M CH: 34 (26MHz, USB) SSB: AG 1kHz, 50mV input AM: Unmodulated Transmit	Power meter Spectrum analyzer AG Linear detector f. counter	Rear panel Front panel	ANT MIC			Transmit output power (RF meter lights up all) Press [MENU] key one time, set to the menu number "01" by pressing [DATA] or [MODE] key. Change to HI, MID, LOW by turning the [DIAL].	No display : 90~110W (20~30W) HI : 45~55W (10~15W) MID : 22~28W (5~8W) LOW : 13~17W (2~5W) *( ): AM mode
Current consumption								No display: 20.5A or less HI: 15A or less MID: 12A or less LOW: 9A or less
Spurious (during HI power)								Higher harmonic : –50dB or less Other: –40dB or less

ADJUSTMENT

Adjustment Points

■ Final unit (A/2) (Component side view)

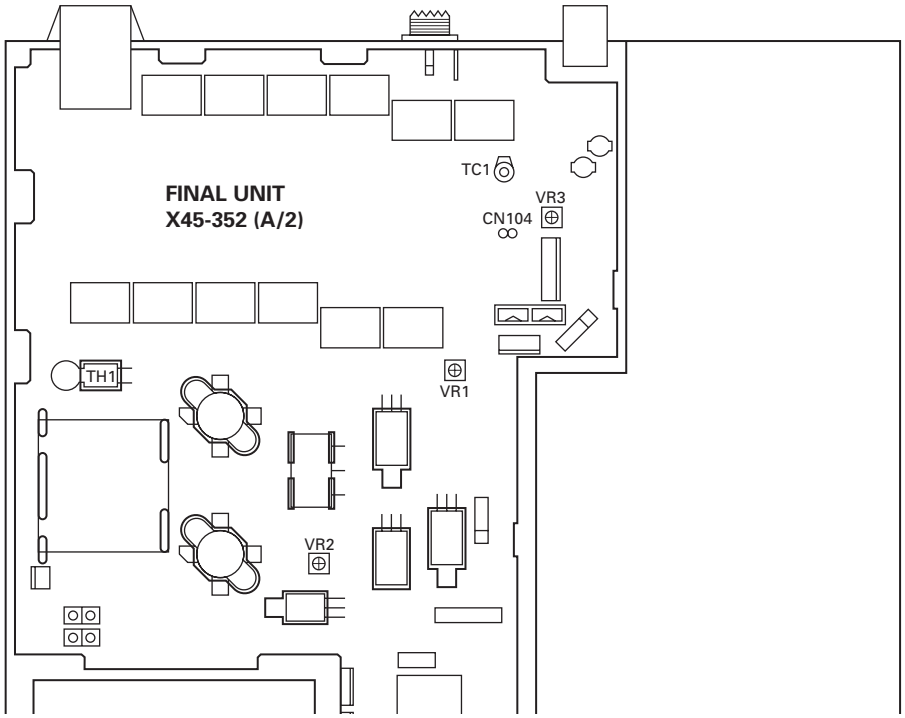

■ TX-RX unit (Component side view)

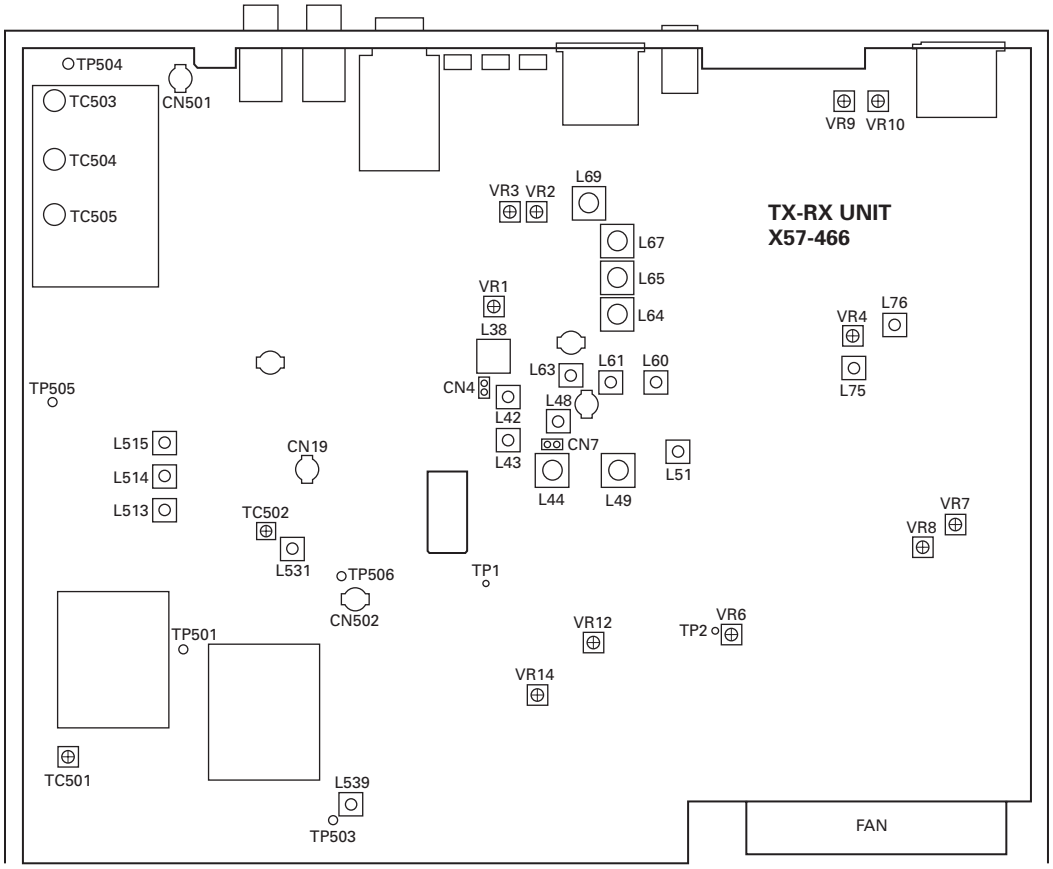

TERMINAL FUNCTION

FINAL UNIT (X45-3520-21) (A/2)

CN No.	Pin No.	Pin Name	Function
CN1	Coax.	DRV	Drive input
CN2	1	FAN+	Power supply for fan
	2	FAN–	Power supply for fan
CN3	1	TT	Antenna tuner control
	2	TS	Antenna tuner control
	3	FEN4	Shift register 4 enable
	4	UCK	Shift register control clock
	5	UDA	Shift register control data
	6	DGND	Digital GND
	7	THP	Thermal protection. High when it operates
	8	BOVR	Low: DC over voltage (approx. 19V or more)
	9	PSC	High when power switch is turned
	10	5A	5V
	11	14V	14V
	12	14S	14V (switched)
	13	8A	Analog 8V
	14	GND	GND
	15	NC	No connection
	16	NC	No connection
CN4	1	GND	GND
	2	TS	Antenna tuner control
	3	TT	Antenna tuner control
	4	AGND	Analog GND
	5	14S	14V (switched)
CN5	Coax.	AT1	AT signal 1
CN6	Coax.	AT2	AT signal 2
CN7	Coax.	RAT	Receive signal output
CN9		ANT.GND	Antenna GND
CN10	1	GND	GND
	2	VSF	Forward wave voltage
	3	VSR	Reflected wave voltage
	4	TXB	8V when transmitting
	5	14AG	14V (for audio IC) GND
	6	14AF	14V (for audio IC)
	7	8A	8V
	8	14S	14V (switched)
CN11	1	GND	GND
	2	4AT	AT band data 2.40000~4.49999MHz
	3	7AT	AT band data 4.50000~7.99999MHz
	4	14AT	AT band data 8.00000~14.49999MHz
	5	18AT	AT band data 14.50000~18.99999MHz
	6	21AT	AT band data 19.00000~21.99999MHz
	7	24AT	AT band data 22.00000~26.99999MHz
	8	28AT	AT band data 27.00000~29.99999MHz
W1		14V	14V
		14V	14V
		GND	GND
		GND	GND
W2		ANT	ANT

FINAL UNIT (X45-3520-21) (B/2)

CN No.	Pin No.	Pin Name	Function
CN800	1	PH1	Headphone output 1
	2	PH2	Headphone output 2
	3	PHG	Headphone GND
J800		PHONES	Headphone output

CONTROL UNIT (X53-3570-21)

CN No.	Pin No.	Pin Name	Function
CN1	1	RAF	Reference audio voltage
	2	DGND	Digital GND
	3	5C	5V for power switch
	4	5A	5V
	5	8A	8V
	6	14S	14V (switched)
	7	LEN1	LCD control enable
	8	LBLK	LCD blanking
	9	SO	Key matrix select
	10	K4	Key matrix
	11	K3	Key matrix
	12	K2	Key matrix
	13	K1	Key matrix
	14	K0	Key matrix
	15	EDP2	Encoder pulse
	16	EDP1	Encoder pulse
	17	PSW	High when the power switch is on
	18	LCK	LCD control clock
	19	LDA	LCD control data
	20	MD	Microphone DOWN switch

TERMINAL FUNCTION

CN No.	Pin No.	Pin Name	Function
CN1	21	MU	Microphone UP switch
	22	SS	Standby switch
	23	VSQL	Squelch volume voltage
	24	VCL	Clarifier volume voltage
	25	VAF	AF volume voltage
	26	DGND	Digital GND
CN2	1	DGND	Digital GND
	2	FSL	Selective call signal detector
	3	FSD	Selective call data
	4	5A	5V
	5	DGND	Digital GND
	6	STD	Single tone detector
	7	Q4	DTMF decode data
	8	Q3	DTMF decode data
	9	Q2	DTMF decode data
	10	Q1	DTMF decode data
	11	TOE	DTMF decoder control
	12	DGND	Digital GND
CN3	1	TT	Antenna tuner control
	2	TS	Antenna tuner control
	3	FEN4	Shift register 4 enable
	4	UCK	Shift register control clock
	5	UDA	Shift register control data
	6	DGND	Digital GND
	7	THP	Thermal protection. High when it operates
	8	BOVR	Low: DC over voltage (approx. 19V or more)
	9	PSC	High when power switch is turned
	10	5A	5V
	11	14V	14V
	12	14S	14V (switched)
	13	8A	8V
	14	GND	GND
	15	NC	No connection
	16	NC	No connection
CN4	1	DGND	Digital GND
	2	RTS	PC I/F (request to send)
	3	CTS	PC I/F (clear to send)
	4	RXD	PC I/F (RX data)
	5	TXD	PC I/F (TX data)

CN No.	Pin No.	Pin Name	Function
CN4	6	AMUT	Audio mute
	7	VAF	AF volume voltage
	8	SIDE	Sidetone
	9	BZ	Beep
	10	BSY	Busy signal
	11	CKY	Keying control
	12	RXC	Receive control
	13	TXC	Transmit control
	14	SM	Signal meter voltage
	15	VSFM	Forward wave voltage
	16	VSRM	Reflected wave voltage
	17	FEN3	Shift register 3 enable
	18	FEN2	Shift register 2 enable
	19	VEN1	Electronic volume control enable
	20	UCK	Shift register, electronic volume control clock
	21	UDA	Shift register, electronic volume control data
	22	FEN1	Shift register 1 enable
	23	KYS	Key jack input. High when jack is inserted
	24	KEY	CW keying. High: Key down
	25	SS	Standby switch
	26	GND	GND
CN5	1	GND	GND
	2	ABSL	DDS2 register selection
	3	DEN2	DDS2 enable
	4	CASL	DDS1 & PLL register selection
	5	DEN1	DDS1 enable
	6	NC	No connection
	7	PLS	Keying line switch
	8	PEN1	PLL enable
	9	PDA	PLL data
	10	PCK	PLL clock
	11	ULK	Unlock detection signal. Low: Unlock
	12	VB3	VCO3 selection signal
	13	VB2	VCO2 selection signal
	14	VB1	VCO1 selection signal
	15	VDLY	Delay volume voltage
	16	GND	GND
CN6	1	DGND	Digital GND
	2	DGND	Digital GND

TERMINAL FUNCTION

CN No.	Pin No.	Pin Name	Function
CN6	3	5A	5V
	4	14S	14V (switched)
	5	ATI	Preset AT install. Low: Install
	6	SPED	Motor speed control
	7	APRE	Preset control select
	8	ATA	AUTO/THRU switch
	9	PR11	Motor rotate direction control 1
	10	PR12	Motor rotate direction control 2
	11	PR21	Motor rotate direction control 3
	12	PR22	Motor rotate direction control 4
	13	ATG	AT GND
	14	VREF	AT reference voltage (5V)
	15	POD2	VC102 position detection signal
	16	POD1	VC101 position detection signal

TX-RX UNIT (X57-4660-21)

CN No.	Pin No.	Pin Name	Function
CN1	Coax.	RAT	Receive signal input
CN2	Coax.	LO1	LO1 input 73.145~103.045MHz
CN3	Coax.	LO2	LO2 input 62.35MHz
CN9	1	CAR	CAR input 10.695MHz
	2	GND	GND
CN10	1	SP	Speaker output
	2	SPG	Speaker GND
CN11	1	PH1	Headphone output 1
	2	PH2	Headphone output 2
	3	PHG	Headphone GND
CN12	1	MIC	MIC signal input
	2	MICG	MIC GND
	3	NC	No connection
	4	SPO	Speaker output
	5	SPOG	Speaker GND
CN13	1	AF	Audio
	2	AFG	Audio GND
	3	MIC	MIC signal input
	4	MICG	MIC GND
CN14	1	DGND	Digital GND
	2	RTS	PC I/F (request to send)
	3	CTS	PC I/F (clear to send)
	4	RXD	PC I/F (RX data)
CN14	5	TXD	PC I/F (TX data)
	6	AMUT	Audio mute
	7	VAF	AF volume voltage
	8	SIDE	Sidetone
	9	BZ	Beep
	10	BSY	Busy signal
	11	CKY	Keying control
	12	RXC	Receive control
	13	TXC	Transmit control
	14	SM	Signal meter voltage
	15	VSFM	Forward wave voltage
	16	VSRM	Reflected wave voltage
	17	FEN3	Shift register 3 enable
	18	FEN2	Shift register 2 enable
	19	VEN1	Electronic volume control enable
	20	UCK	Shift register, electronic volume control clock
	21	UDA	Shift register, electronic volume control data
	22	FEN1	Shift register 1 enable
	23	KYS	Key jack input. High when jack is inserted
	24	KEY	CW keying. High: Key down
	25	SS	Standby switch
	26	GND	GND
CN15	1	14S	14V (switched)
	2	8A	8V
	3	14AF	14V (for audio IC)
	4	14AG	14V (for audio IC) GND
	5	TXB	8V when transmitting
	6	VSR	Reflected wave voltage
	7	VSF	Forward wave voltage
	8	GND	GND
CN19	Coax.	DRV	Drive output
W1	1	NBI	NB amplifier signal input
	2	NBG	NB GND
J1	1	DGND	Digital GND
	2	TXD	PC I/F (TX data)
	3	RXD	PC I/F (RX data)
	4	CTS	PC I/F (clear to send)
	5	RTS	PC I/F (request to send)
	6	NC	No connection

TERMINAL FUNCTION

CN No.	Pin No.	Pin Name	Function
J2	1	NC	No connection
	2	RTK	RTTY keying line
	3	ANO	Received data output
	4	GND	GND
	5	PSQ	Squelch control output
	6	PKS	DATA terminal SEND key (Low: Transmission microphone mute)
	7	PKD	Transmission data input
	8	PKDG	Transmission data GND
J3		RELAY	Linear relay control
J4		ALC	ALC voltage
J5		EXT. SP	External speaker
J6		KEY	CW key input
CN500	1	GND	GND
	2	ABSL	DDS2 register selection
	3	DEN2	DDS2 enable
	4	CASL	DDS1 & PLL register selection
	5	DEN1	DDS1 enable
	6	NC	No connection
	7	PLS	Keying line switch
	8	PEN1	PLL enable
	9	PDA	PLL data
	10	PCK	PLL clock
	11	ULK	Unlock detection signal. Low: Unlock
	12	VB3	VCO3 selection signal
	13	VB2	VCO2 selection signal
	14	VB1	VCO1 selection signal
	15	VDLY	Delay volume voltage
	16	GND	GND
CN501	Coax.	LO1	LO1 output 73.145~103.045MHz
CN502	Coax.	LO2	LO2 output 62.35MHz
CN503	1	CAR	CAR output 10.695MHz
	2	GND	GND
W1	1	NBI	NB amplifier signal input
	2	NBG	NB GND

LCD ASSY

CN No.	Pin No.	Pin Name	Function
CN1	1	DGND	Digital GND
	2	VAF	AF volume voltage

CN No.	Pin No.	Pin Name	Function
CN1	3	VCL	Clarifier volume voltage
	4	VSQL	Squelch volume voltage
	5	SS	Standby switch
	6	MU	Microphone UP switch
	7	MD	Microphone DOWN switch
	8	LDA	LCD control data
	9	LCK	LCD control clock
	10	PSW	High when the power switch is on
	11	EDP1	Encoder pulse
	12	EDP2	Encoder pulse
	13	K0	Key matrix
	14	K1	Key matrix
	15	K2	Key matrix
	16	K3	Key matrix
	17	K4	Key matrix
	18	SO	Key matrix select
	19	LBLK	LCD blanking
	20	LEN1	LCD control enable
	21	14S	14V (switched)
	22	8A	8V
	23	5A	5V
	24	5C	5V for power switch
	25	DGND	Digital GND
	26	RAF	Reference audio voltage
CN2	1	MIC	MIC signal output
	2	MICG	MIC GND
	3	AGND	Analog GND
	4	SPO	Speaker output
	5	SPOG	Speaker GND
J1	1	MIC	MIC signal output
	2	SS	Standby switch
	3	DOWN	Microphone DOWN
	4	UP	Microphone UP
	5	8A	8V
	6	SPO	Sepaker output
	7	MICG	MIC GND
	8	GND	GND

LEVEL DIAGRAM

TX Section

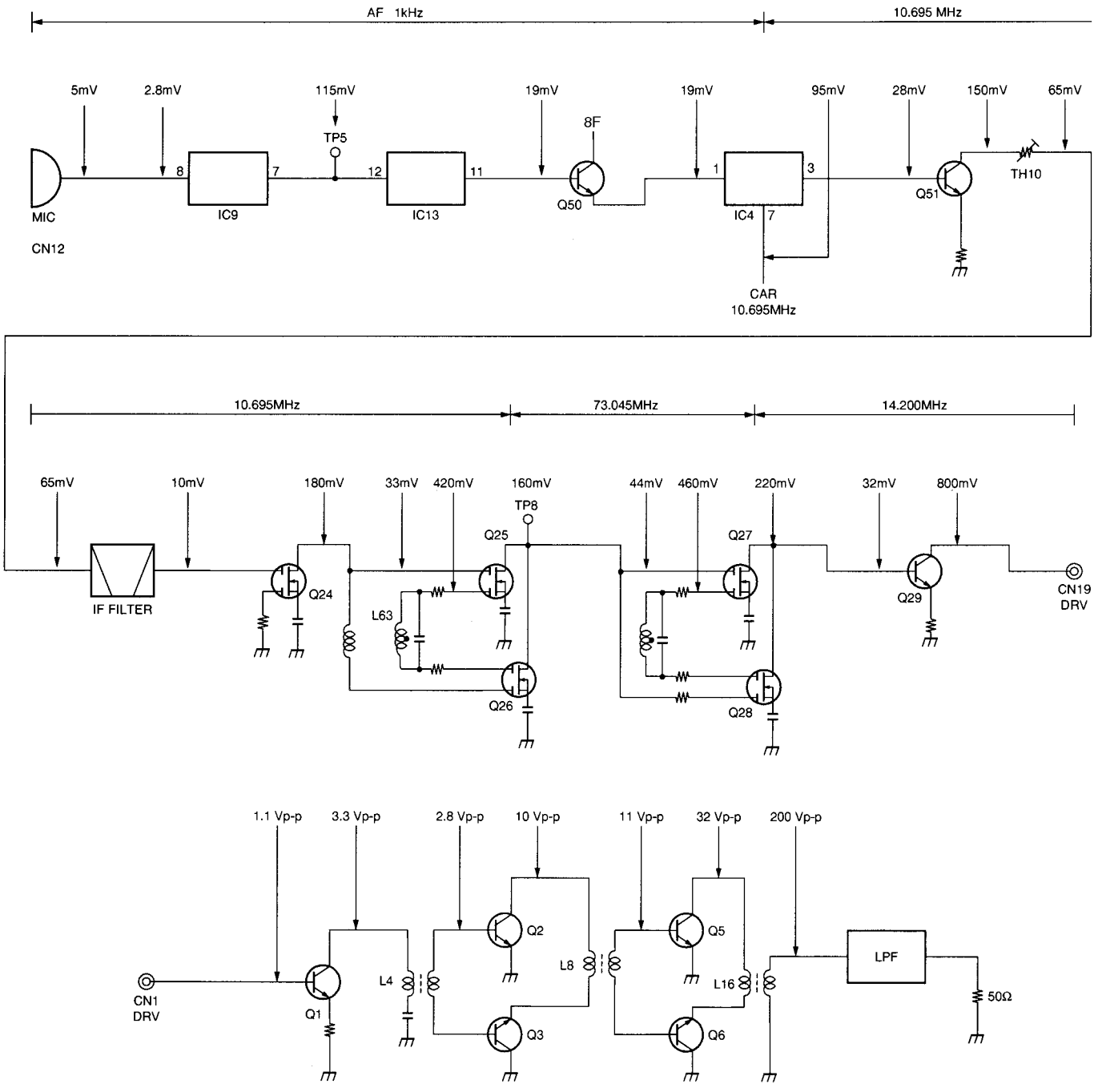

MIC input: 1kHz, 5mV
The AF level is measured by an AF VTVM.
The RF level is measured by an RF VTVM.

LEVEL DIAGRAM

RX Section

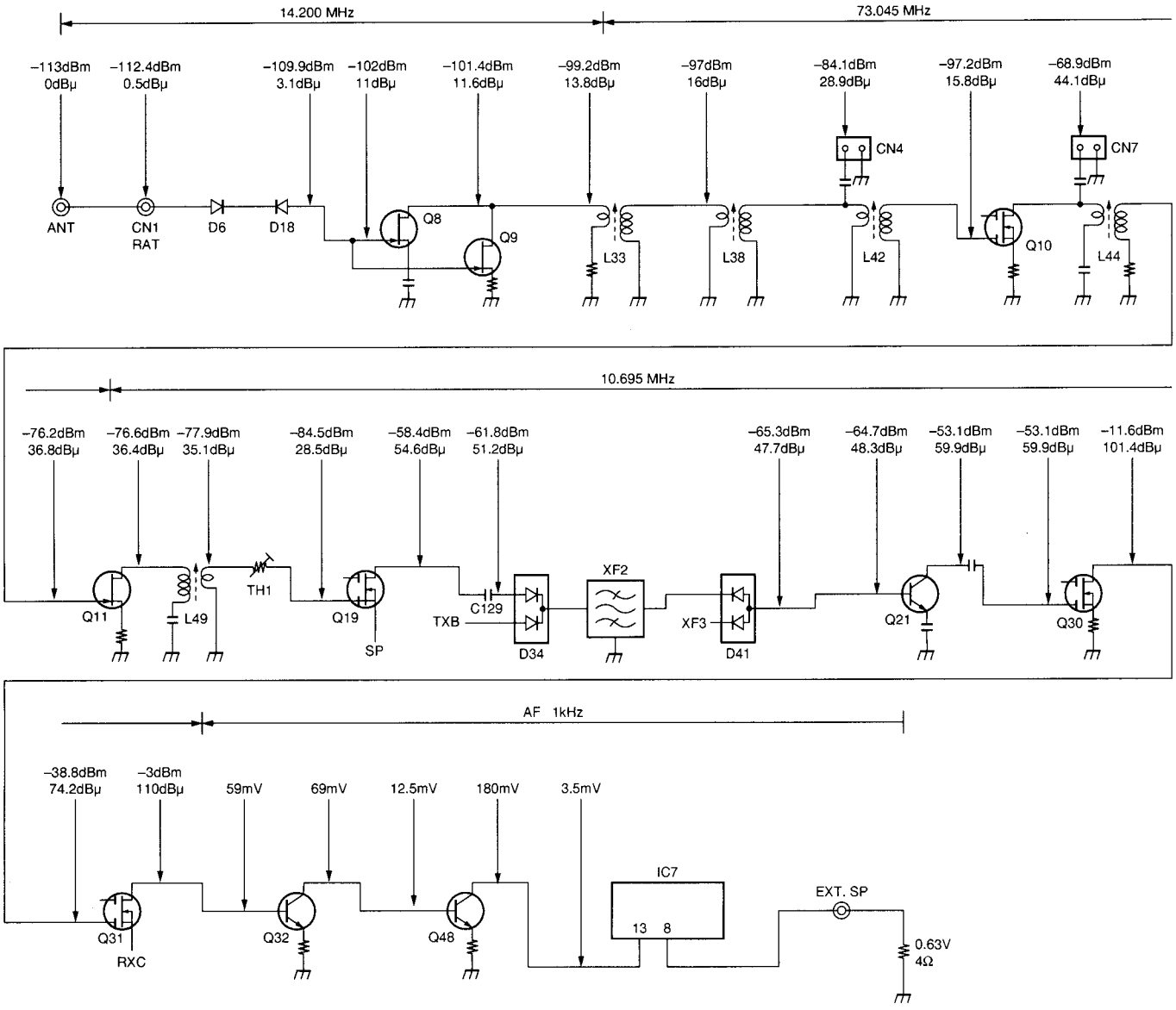

AIP: OFF

1. Connect the signal generator to the ANT terminal at 14.2MHz USB, apply a signal of 0dBμ (EMF), tune so that the AF output beat frequency is 1kHz, and adjust the AF VR so that the AF output is 0.63V/4Ω.
2. Connect the signal generator to each measurement point (cut off the DC), and the AF output in step 1 so that the above EMFs set are obtained.
   During measurement, the beat frequency of the AF output is normally 1kHz.
3. The signal type connector, TP, shown by ◎ is measured by removing the coaxial cable inside the set, which is connected to that connector, and connecting the signal generator in its place. The station transmission system connector shown by ◎ is a value measured by connecting the coaxial cable within the set connected to that connector (input must be 50Ω) to the spectrum analyzer.
4. The AF stage level is the level measured at AF V.M for each stage during the conditions indicated in step1.

LEVEL DIAGRAM

Local Oscillator Section

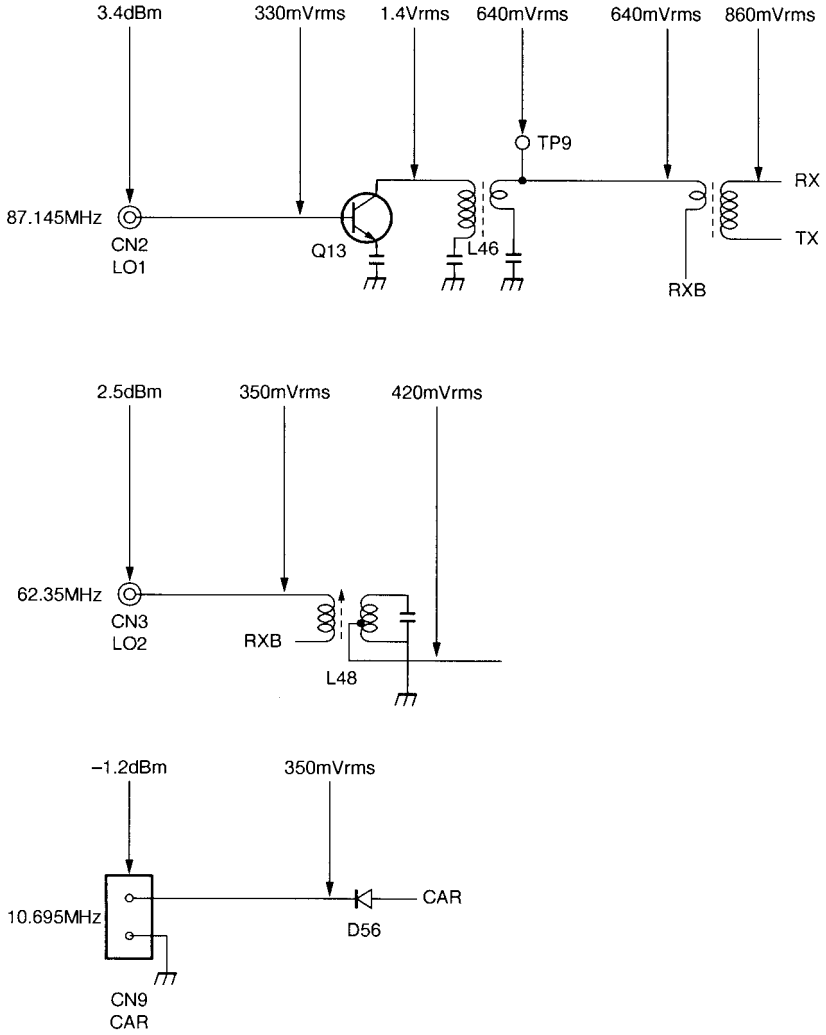

TK-80 PC BOARD

LCD ASSY (B38-0739-15) Component side view

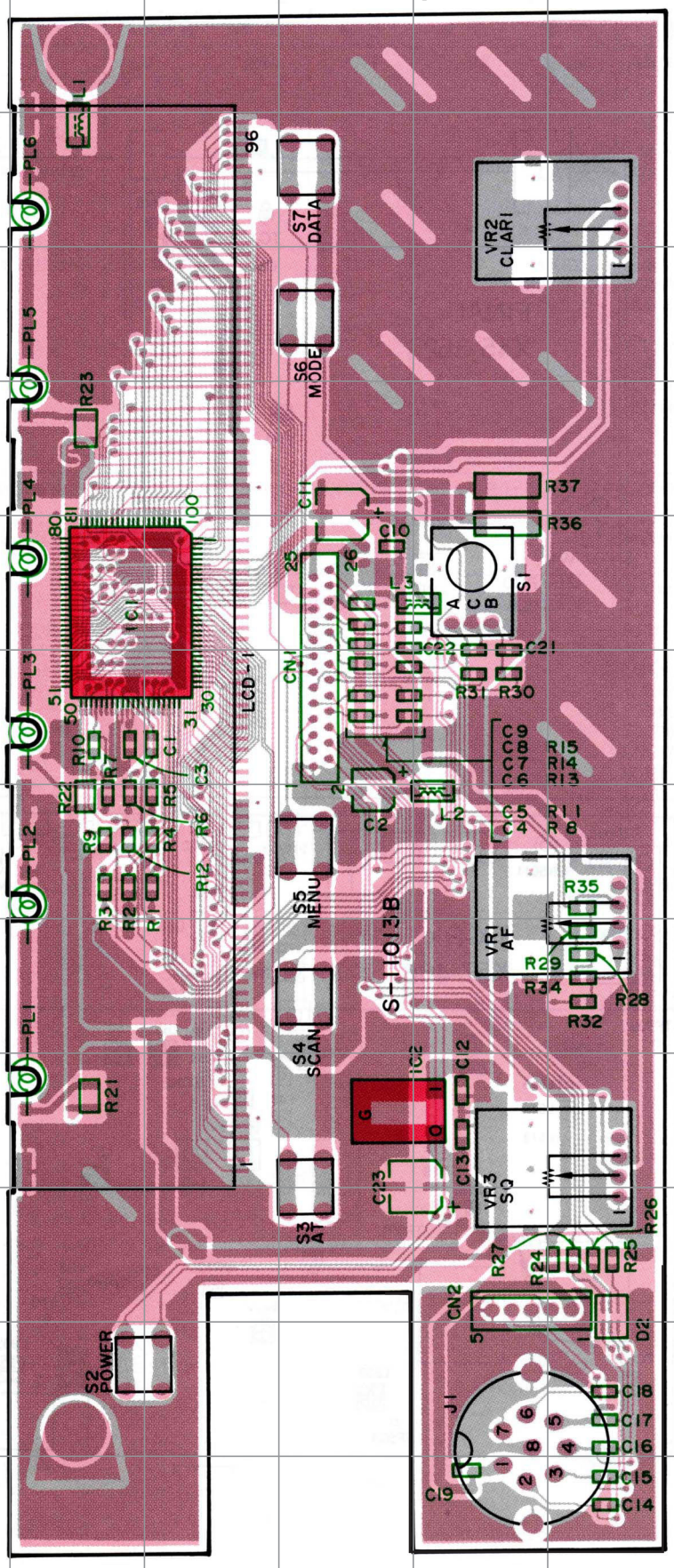

Component side
Layer 1
Layer 2
Foil side

New PCB

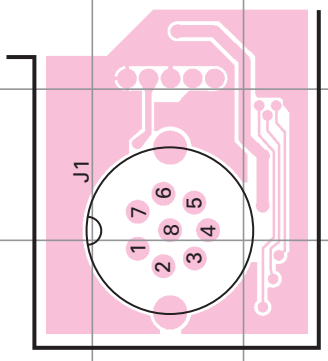

LCD ASSY (B38-0739-15) Foil side view

Ref. No.	Address
IC1	6I
IC2	10G
D2	11C

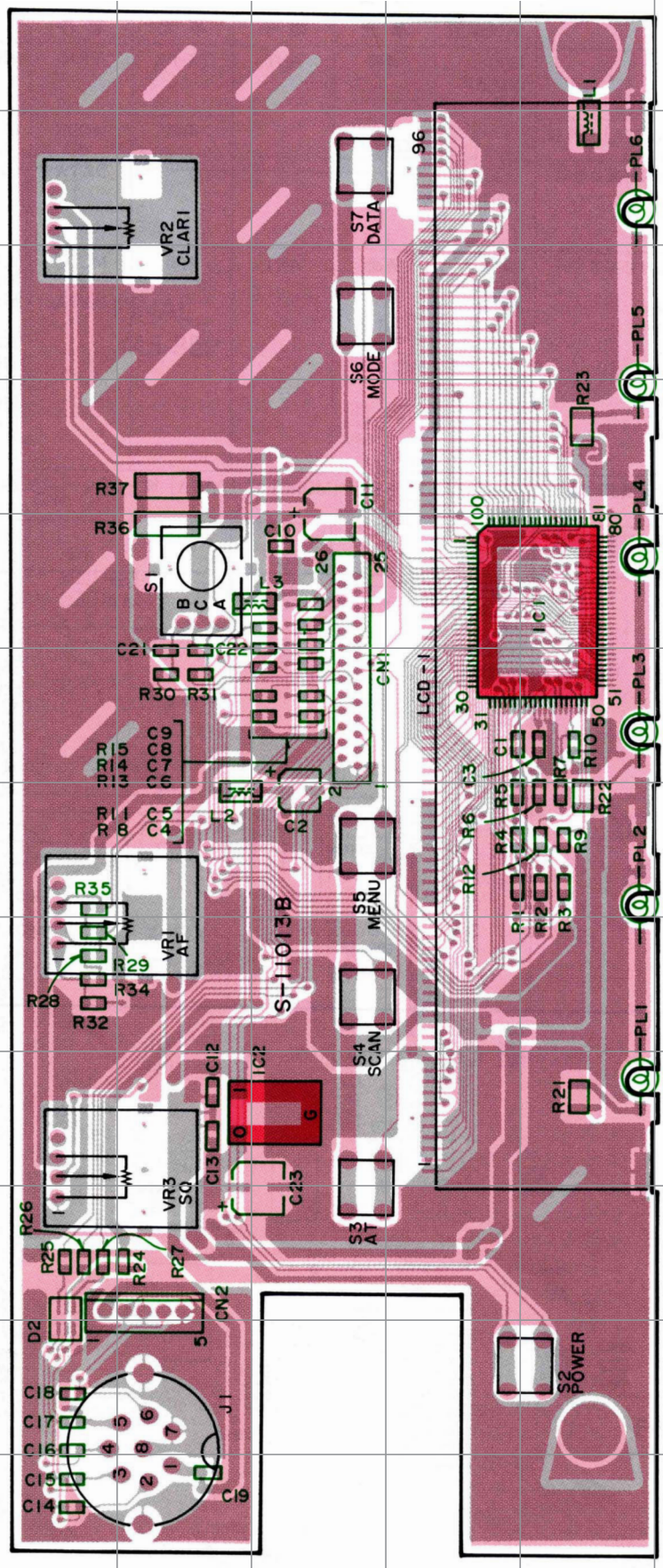

Component side
Layer 1
Layer 2
Foil side

New PCB

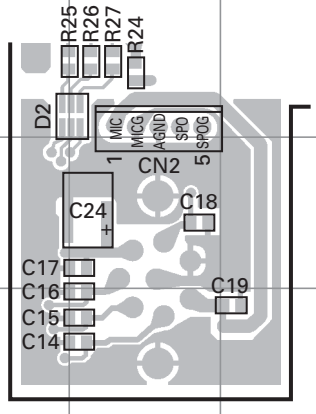

TK-80 PC BOARD

FINAL UNIT (X45-3520-21) Component side view (J72-0380-11)

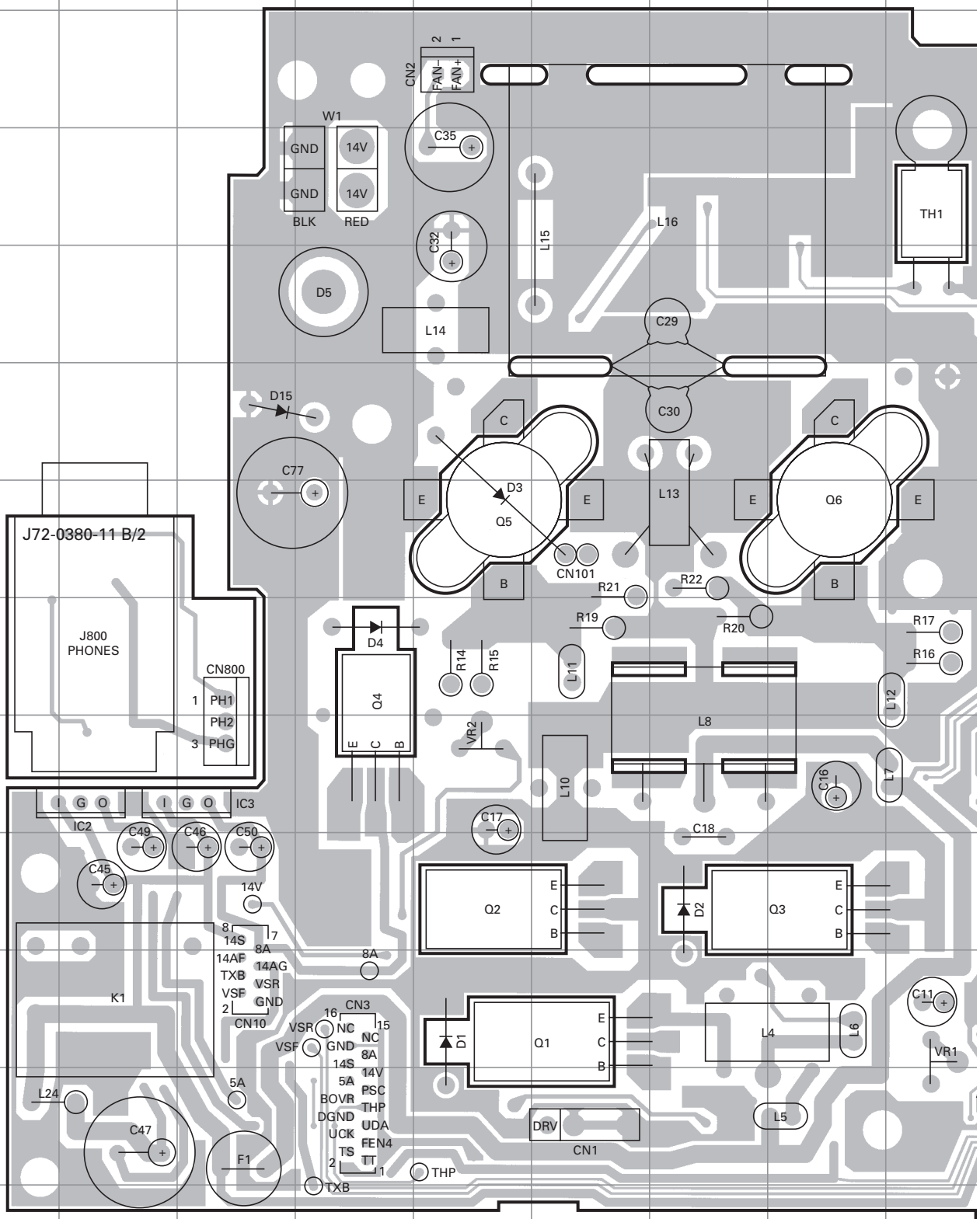

FINAL UNIT (X45-3520-21) Component side view (J72-0380-11)

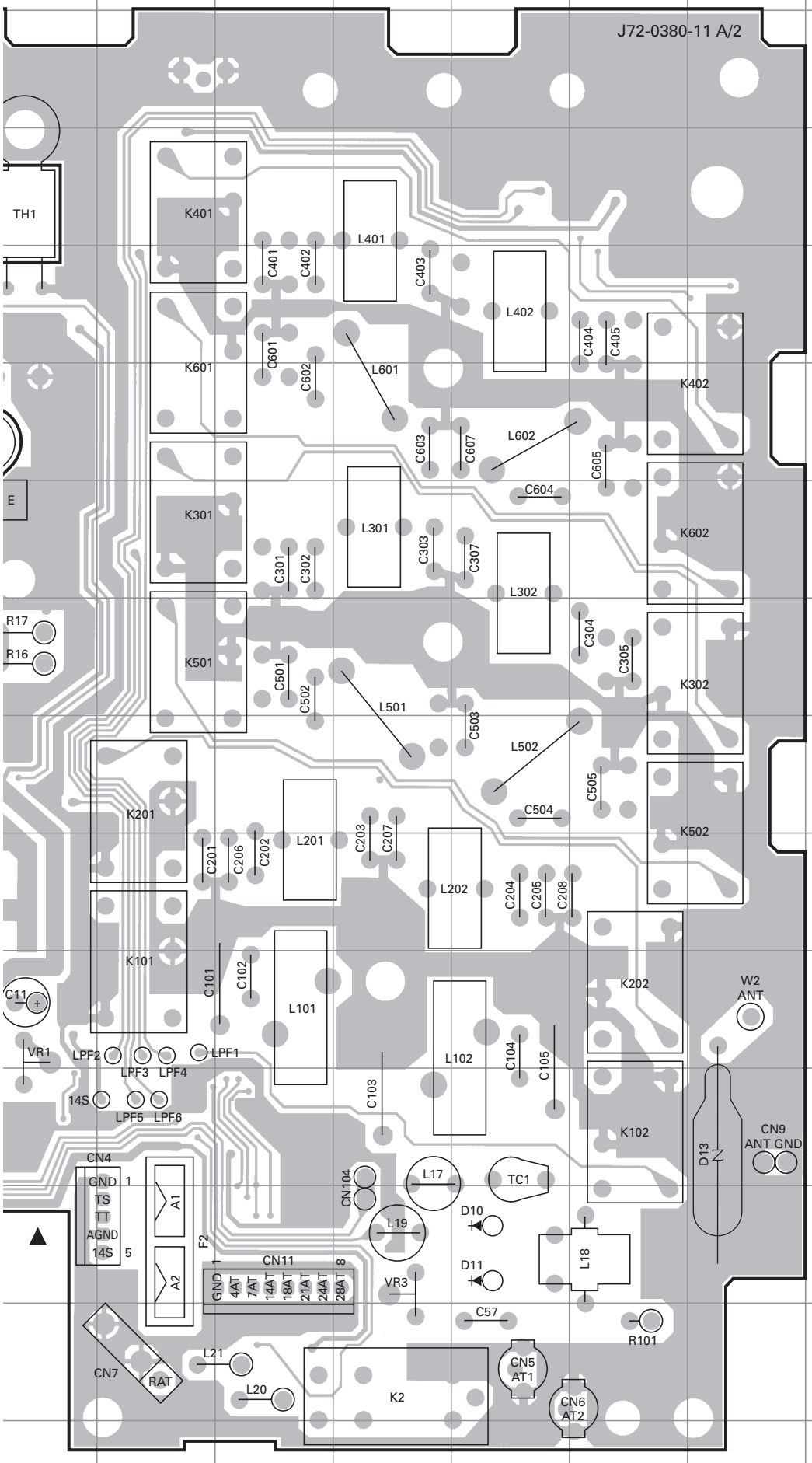

Ref. No.	Address
IC2	8C
IC3	8D
Q1	0G
Q2	9F
Q3	9I
Q4	7E
Q5	6F
Q6	6I
D1	10F
D2	9H
D3	6F
D4	7E
D5	4E
D10	12N
D11	12N
D13	11P
D15	5D

Component side
Layer 1
Layer 2
Foil side

TK-80 PC BOARD

FINAL UNIT (X45-3520-21) Component side view (J72-0380-11)

TK-80 PC BOARD

FINAL UNIT (X45-3520-21) Component side view (J72-0380-11)

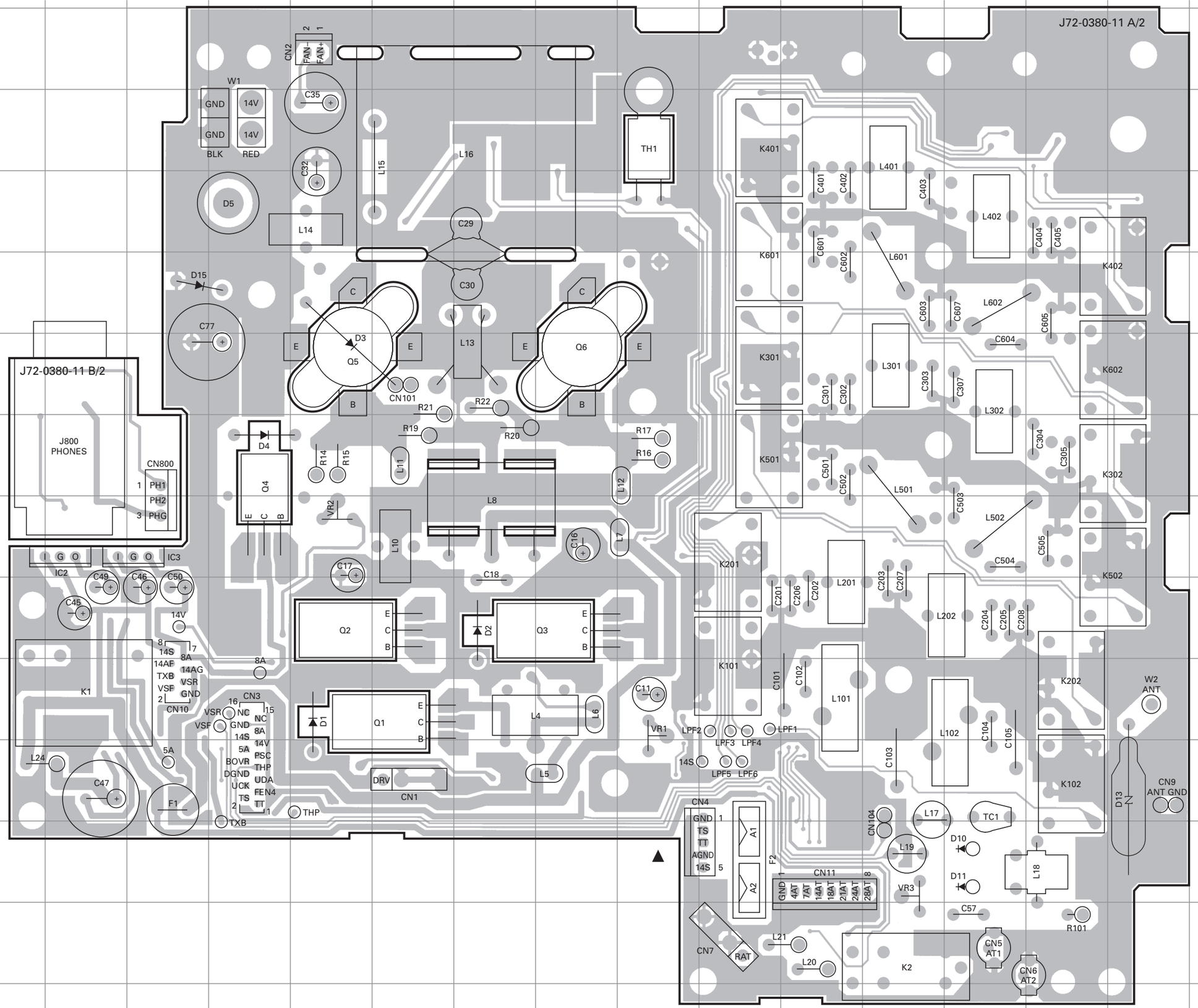

Ref. No.	Address
IC2	8C
IC3	8D
Q1	0G
Q2	9F
Q3	9I
Q4	7E
Q5	6F
Q6	6I
D1	10F
D2	9H
D3	6F
D4	7E
D5	4E
D10	12N
D11	12N
D13	11P
D15	5D

Component side
Layer 1
Layer 2
Foil side

TK-80 PC BOARD

FINAL UNIT (X45-3520-21) Foil side view (J72-0380-11)

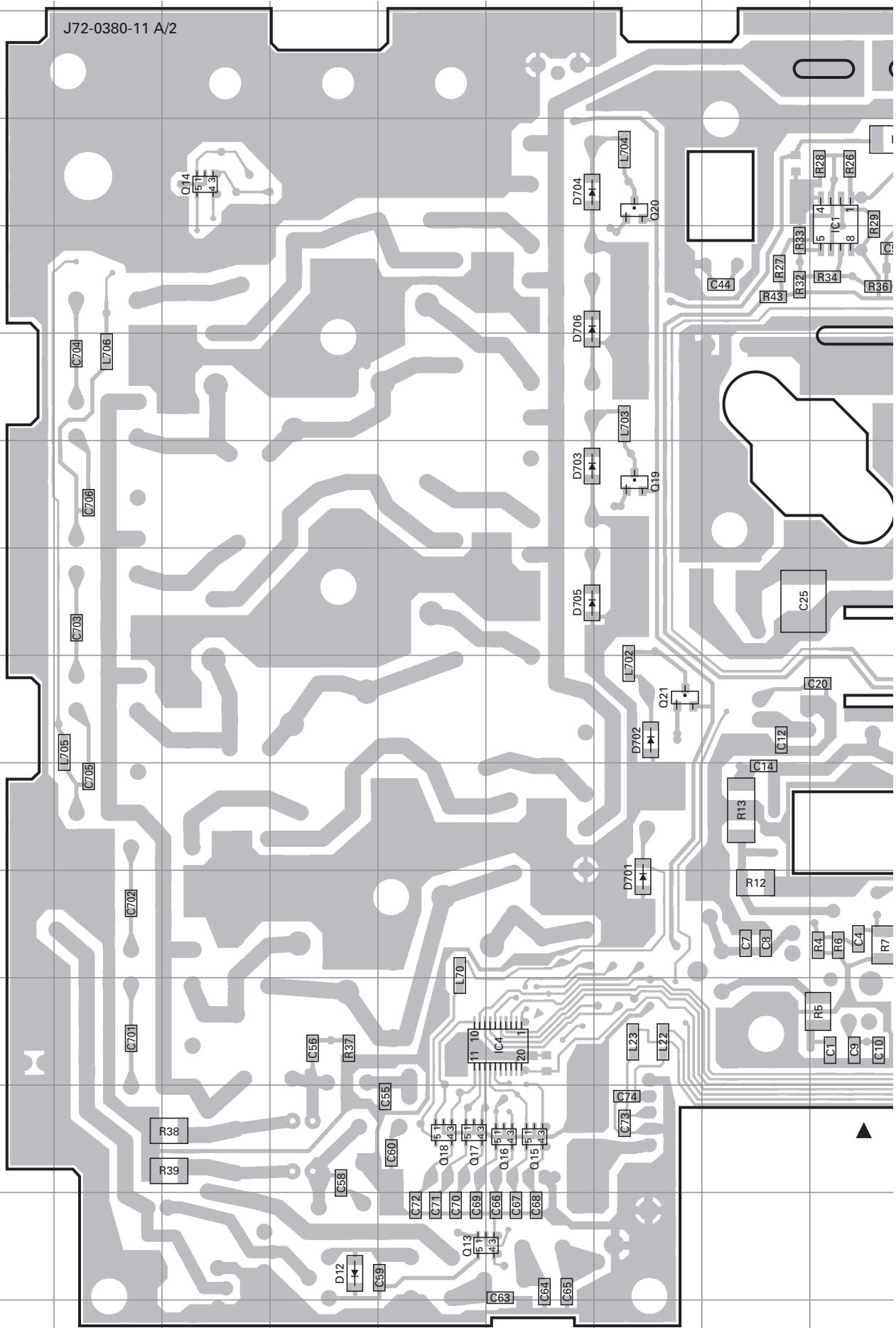

FINAL UNIT (X45-3520-21) Foil side view (J72-0380-11)

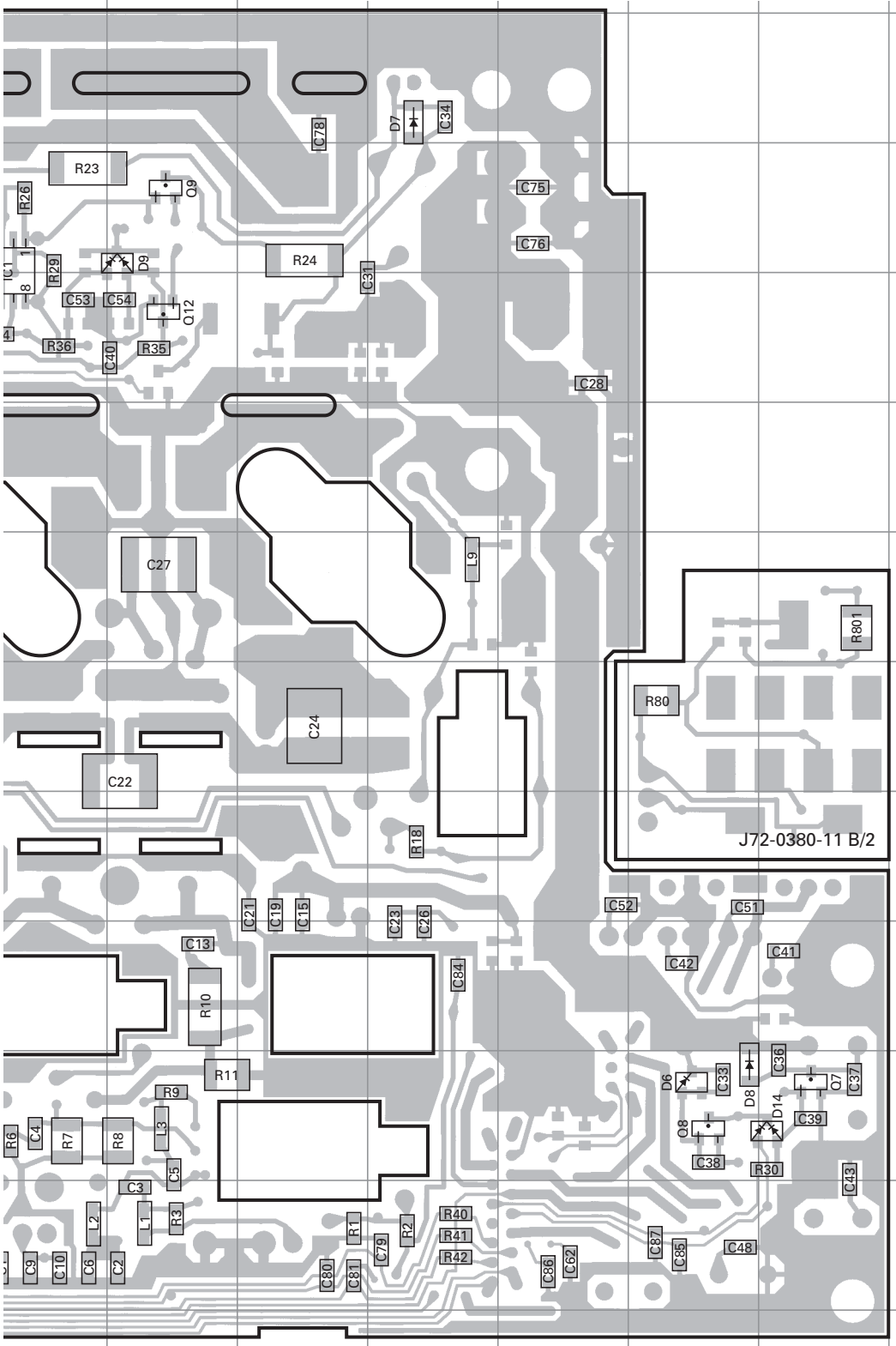

Ref. No.	Address
IC1	3J
IC4	11G
Q7	10P
Q8	10O
Q9	3K
Q12	4K
Q13	13F
Q14	3D
Q15	12G
Q16	12G
Q17	12F
Q18	12F
Q19	6H
Q20	3H
Q21	8H
D6	10O
D7	2M
D8	10O
D9	3K
D12	13E
D14	10P
D701	10H
D702	8H
D703	6G
D704	3G
D705	7G
D706	4G

Component side
Layer 1
Layer 2
Foil side

TK-80 PC BOARD

FINAL UNIT (X45-3520-21) Foil side view (J72-0380-11)

PC BOARD TK-80

FINAL UNIT (X45-3520-21) Foil side view (J72-0380-11)

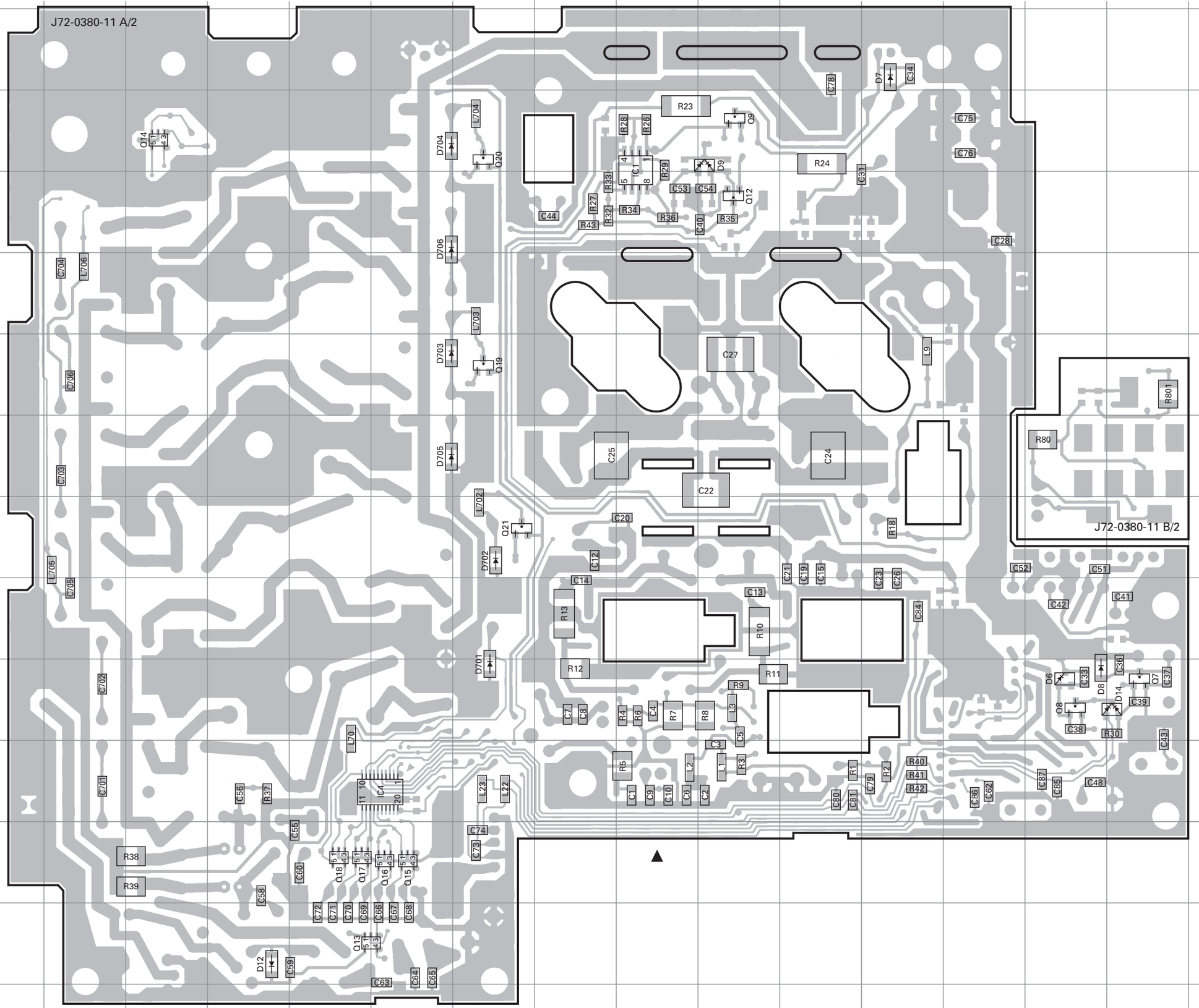

Ref. No.	Address
IC1	3J
IC4	11G
Q7	10P
Q8	10O
Q9	3K
Q12	4K
Q13	13F
Q14	3D
Q15	12G
Q16	12G
Q17	12F
Q18	12F
Q19	6H
Q20	3H
Q21	8H
D6	10O
D7	2M
D8	10O
D9	3K
D12	13E
D14	10P
D701	10H
D702	8H
D703	6G
D704	3G
D705	7G
D706	4G

TK-80 PC BOARD

CONTROL UNIT (X53-3570-21) Component side view (J72-0381-12)

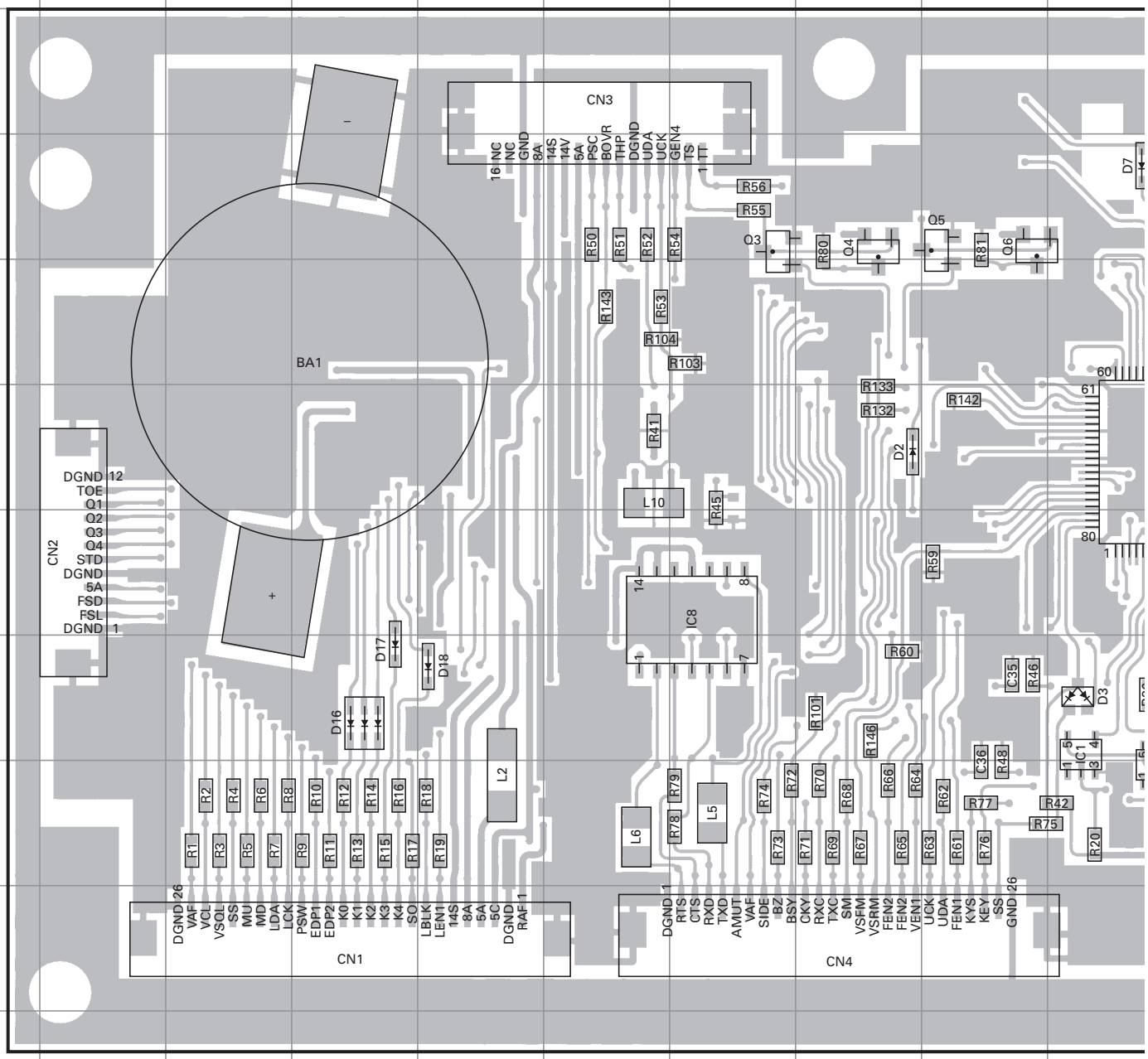

Ref. No.	Address	Ref. No.	Address	Ref. No.	Address
IC1	8J	Q5	4I	D11	4K
IC2	9J	Q6	4I	D12	4K
IC5	6K	D2	6H	D13	4L
IC6	8O	D3	8J	D15	4K
IC7	7P	D7	4J	D16	8D
IC8	7G	D8	4K	D17	8D
Q3	4G	D9	4K	D18	8E
Q4	4H	D10	4K		

CONTROL UNIT (X53-3570-21) Component side view (J72-0381-12)

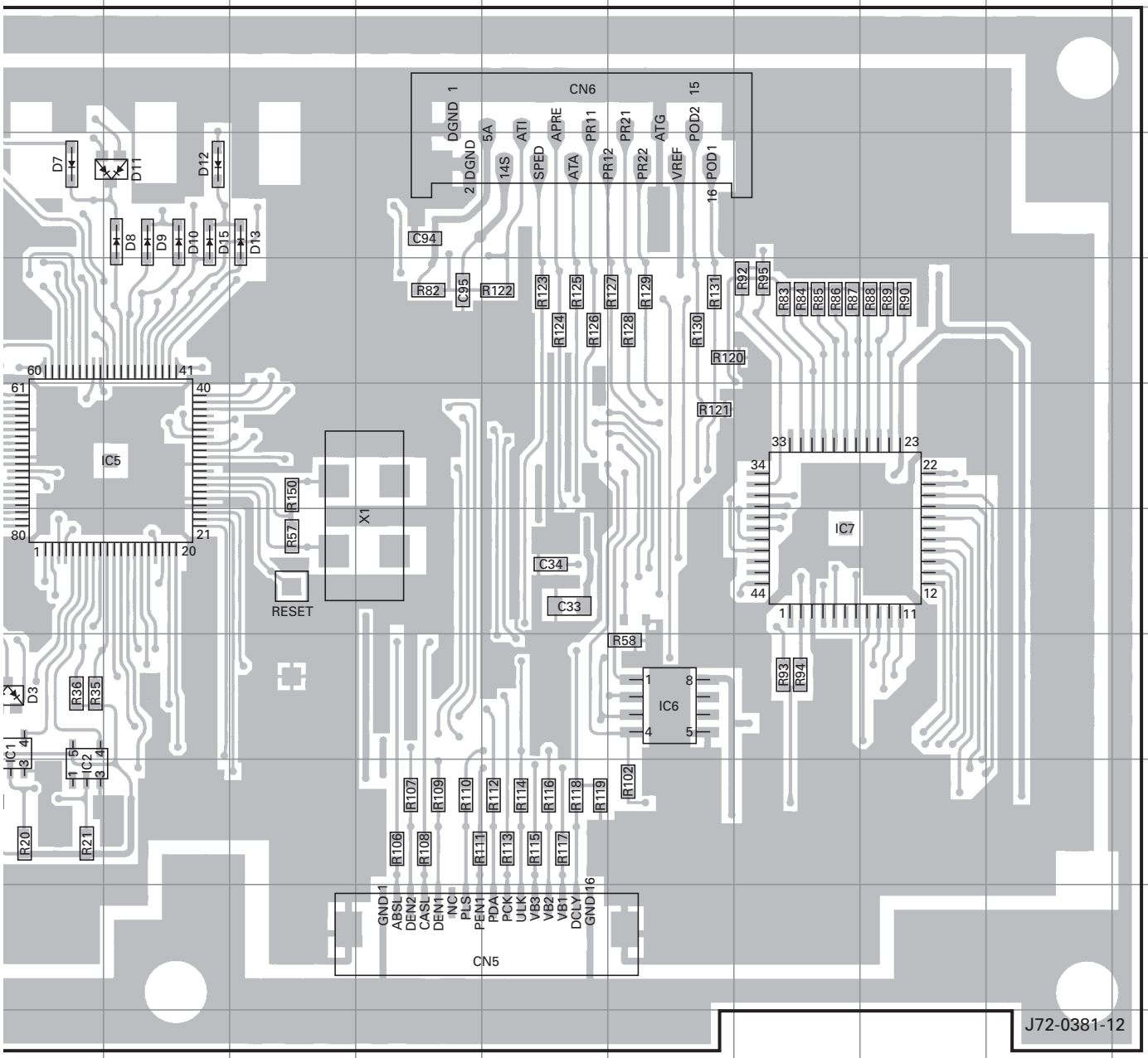

Component side
Layer 1
Layer 2
Foil side

TK-80 PC BOARD

PC BOARD TK-80

CONTROL UNIT (X53-3570-21) Component side view (J72-0381-12)

CONTROL UNIT (X53-3570-21) Component side view (J72-0381-12)

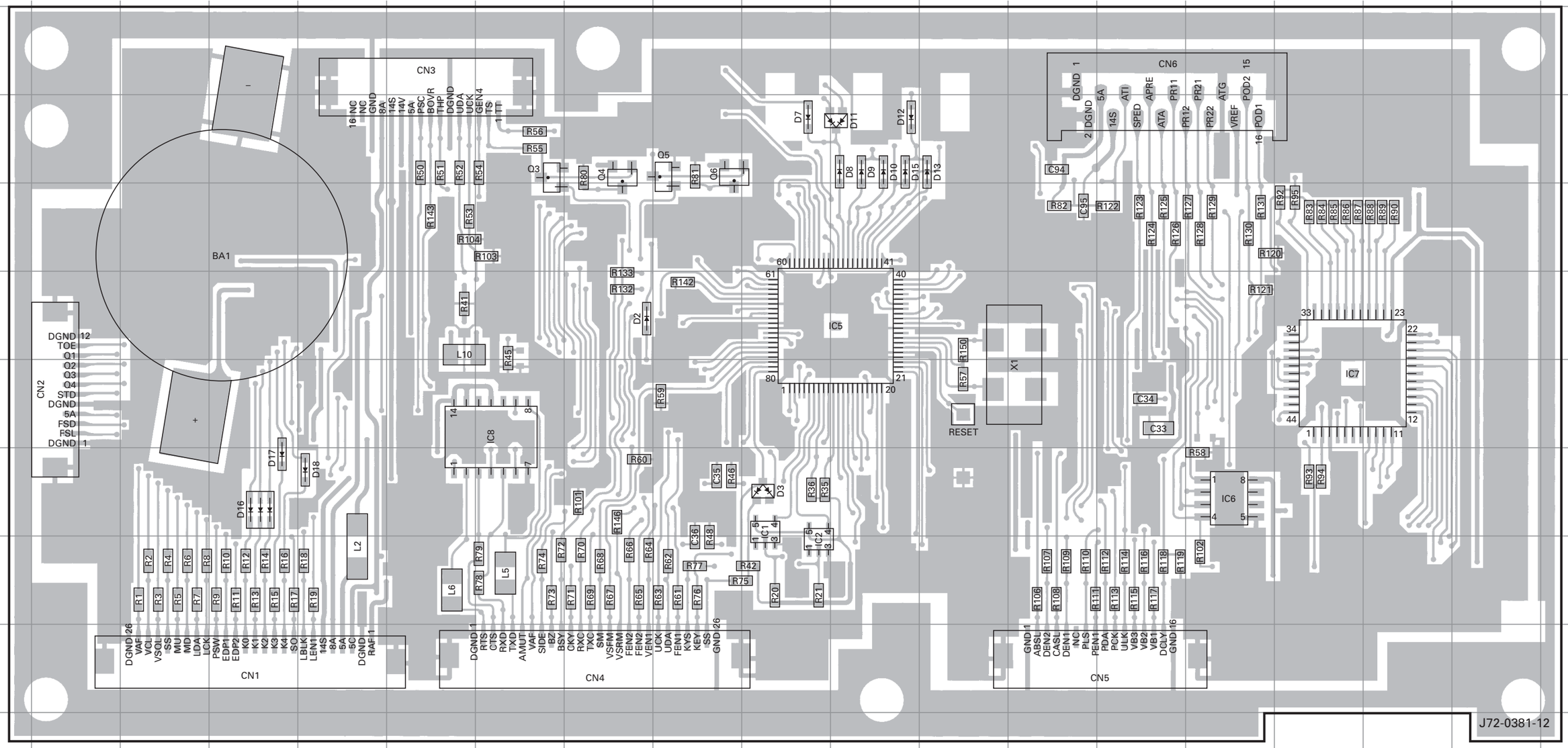

Ref. No.	Address	Ref. No.	Address	Ref. No.	Address
IC1	8J	Q5	4I	D11	4K
IC2	9J	Q6	4I	D12	4K
IC5	6K	D2	6H	D13	4L
IC6	8O	D3	8J	D15	4K
IC7	7P	D7	4J	D16	8D
IC8	7G	D8	4K	D17	8D
Q3	4G	D9	4K	D18	8E
Q4	4H	D10	4K		

Component side
Layer 1
Layer 2
Foil side

TK-80 PC BOARD

CONTROL UNIT (X53-3570-21) Foil side view (J72-0381-12)

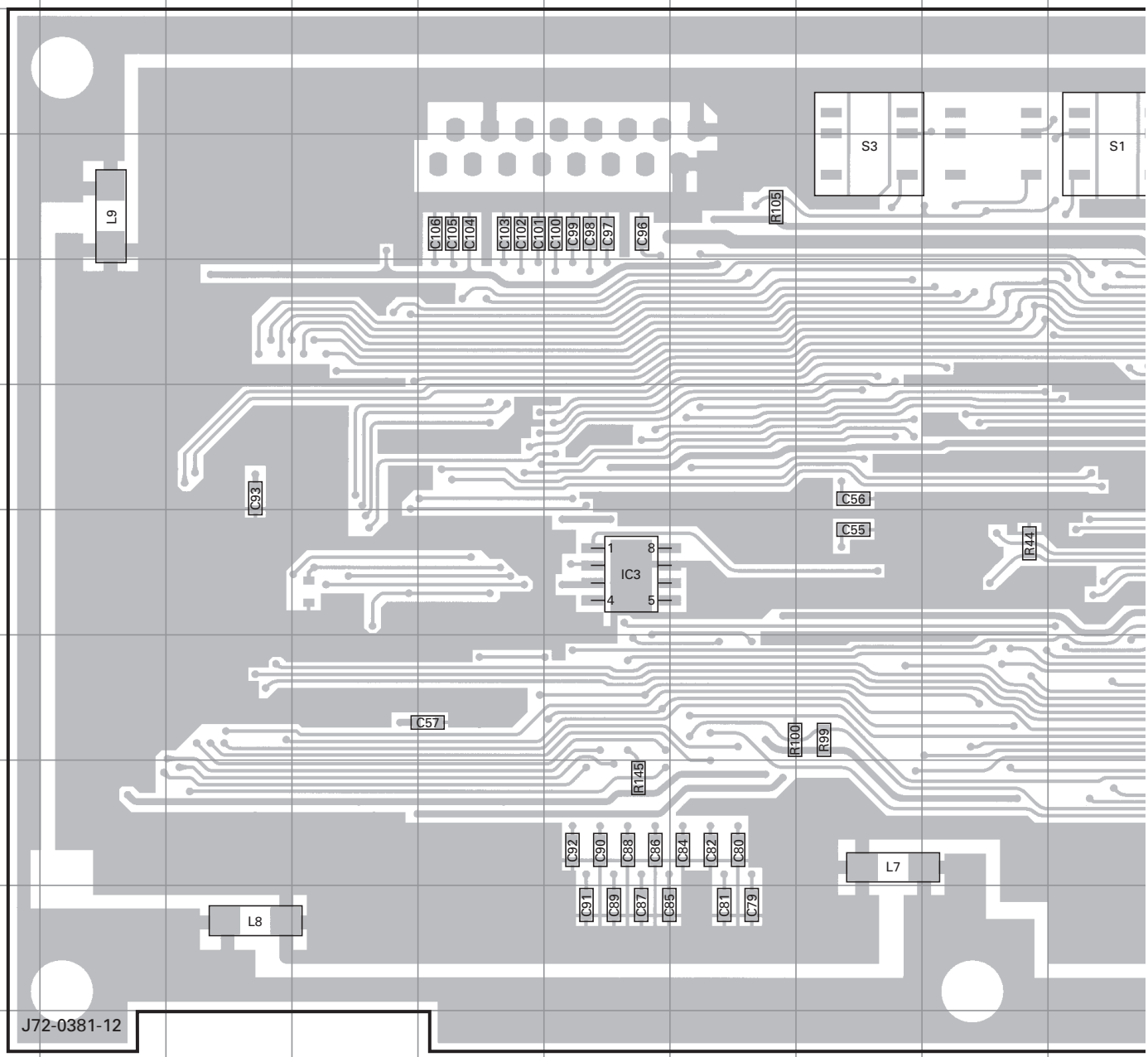

Ref. No.	Address	Ref. No.	Address
IC3	7F	D1	6M
IC4	5P	D4	4O
Q1	5O	D5	6O
Q2	5P	D6	6P
Q7	5O	D14	4O

PC BOARD TK-80

CONTROL UNIT (X53-3570-21) Foil side view (J72-0381-12)

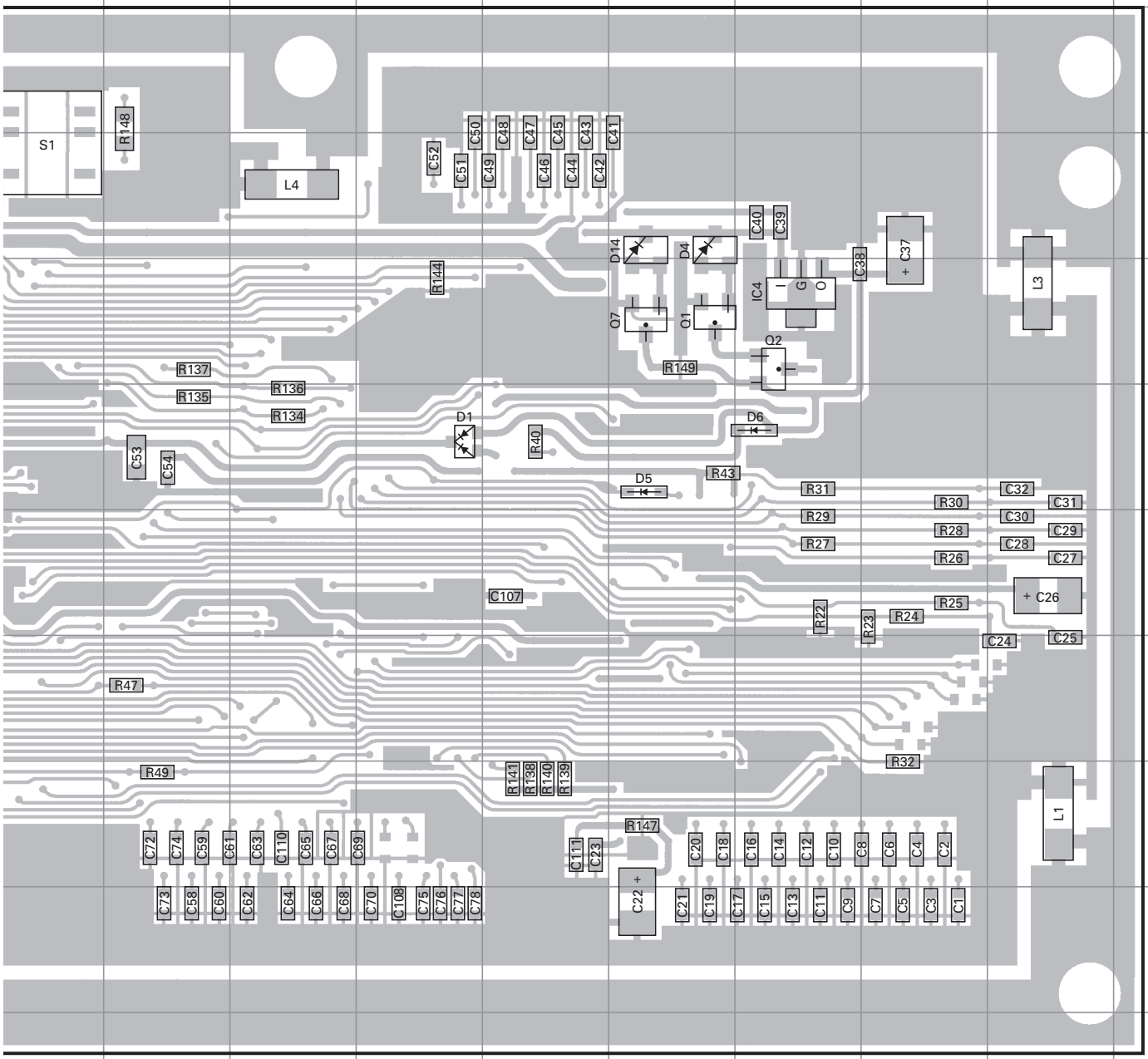

Component side

Layer 1

Layer 2

Foil side

TK-80 PC BOARD

PC BOARD TK-80

CONTROL UNIT (X53-3570-21) Foil side view (J72-0381-12)

CONTROL UNIT (X53-3570-21) Foil side view (J72-0381-12)

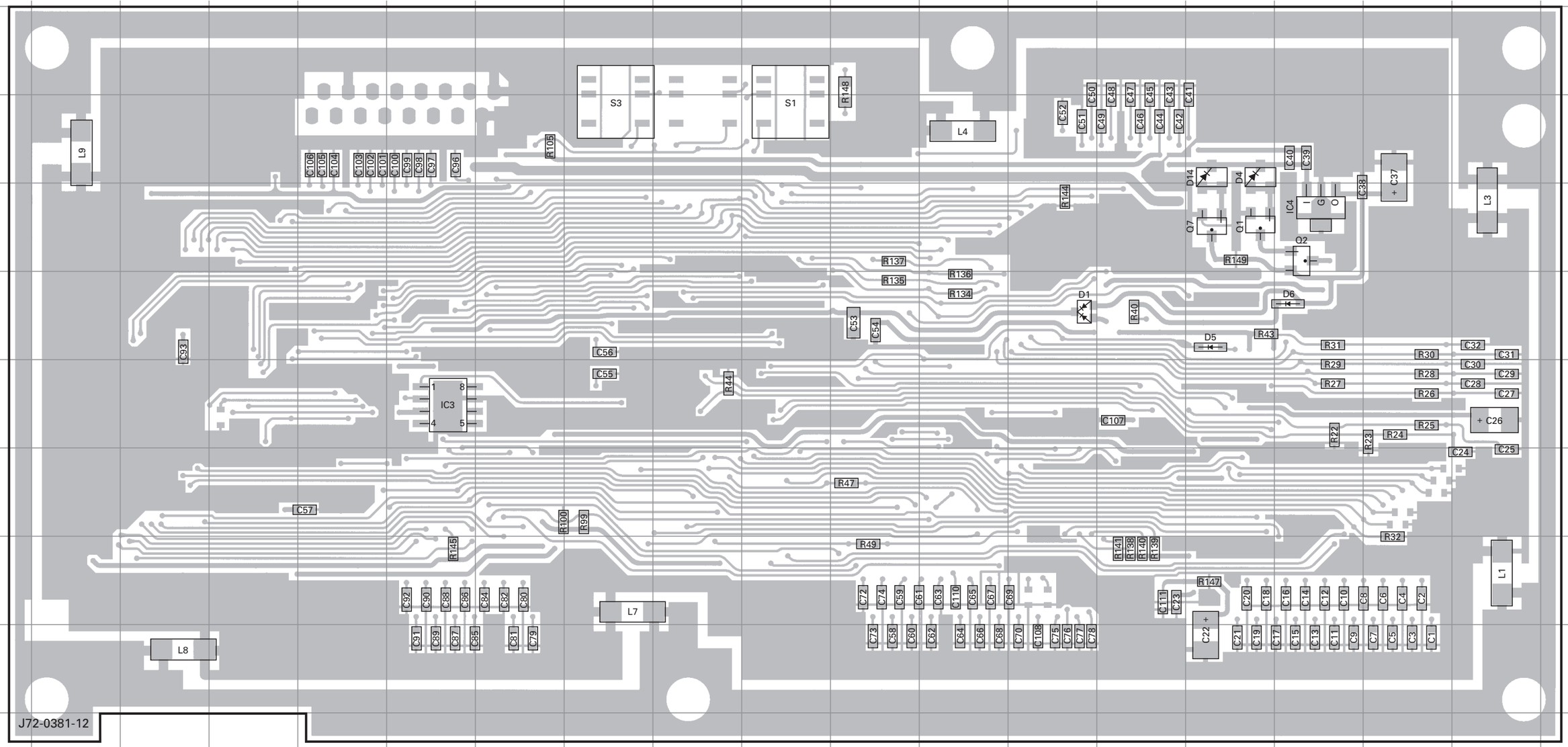

Ref. No.	Address	Ref. No.	Address
IC3	7F	D1	6M
IC4	5P	D4	4O
Q1	5O	D5	6O
Q2	5P	D6	6P
Q7	5O	D14	4O

Component side
Layer 1
Layer 2
Foil side

TK-80 PC BOARD

TX-RX UNIT (X57-4660-21)

Component side view (J72-0382-41)

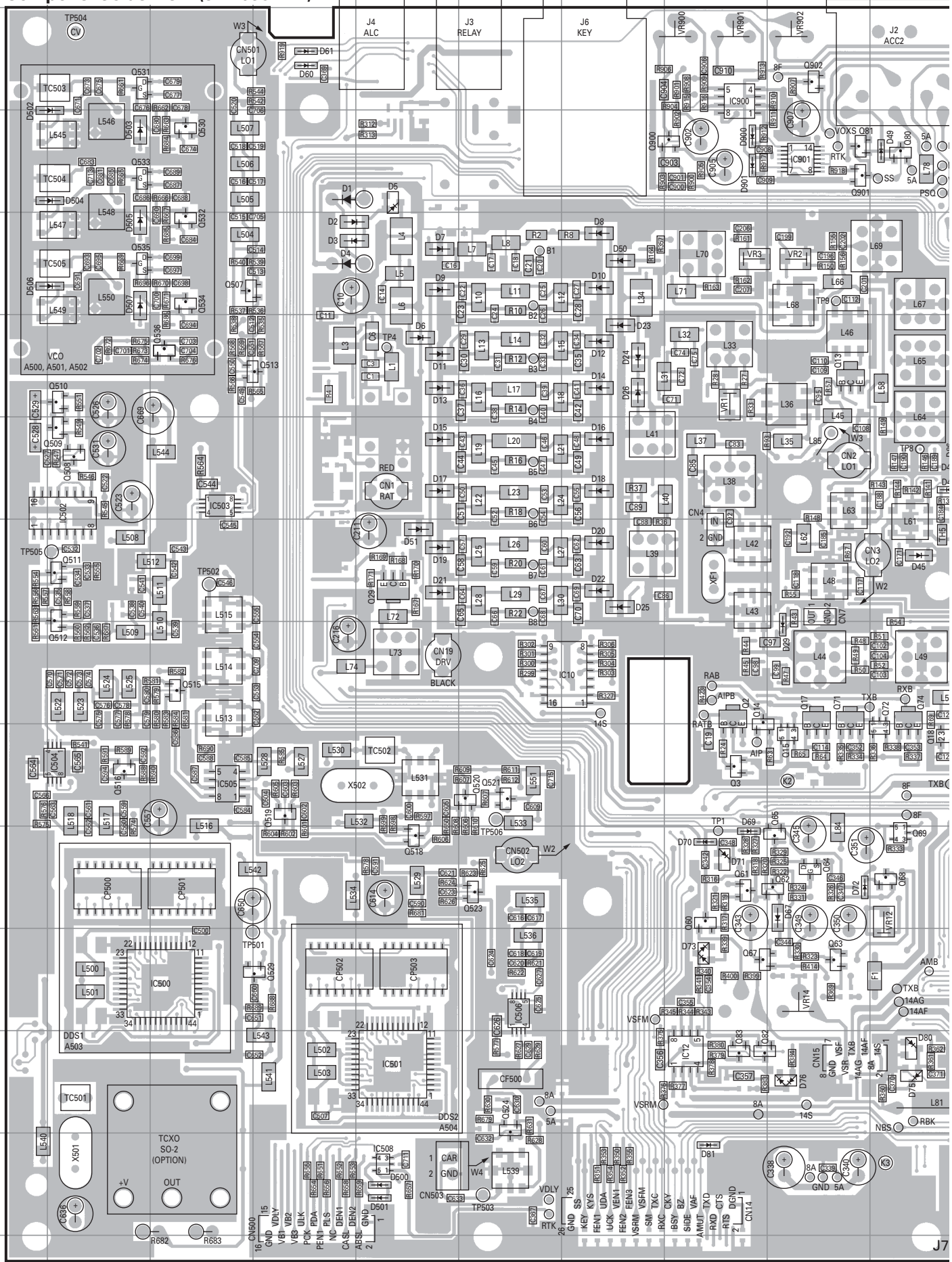

PC BOARD TK-80

TX-RX UNIT (X57-4660-21)

Component side view (J72-0382-41)

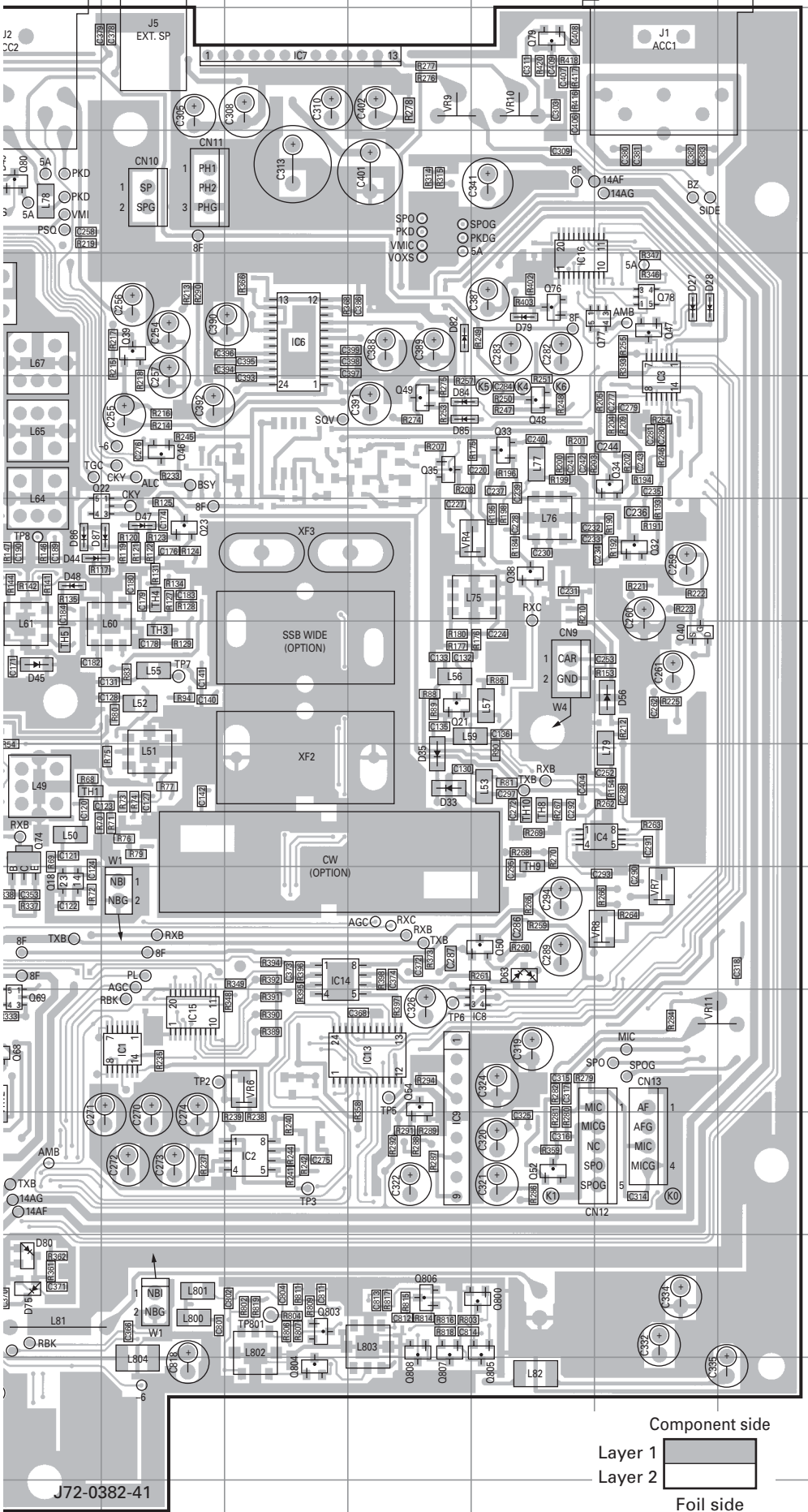

Ref. No.	Address	Ref. No.	Address	Ref. No.	Address
IC1	10K	Q69	10J	D13	5E
IC2	11L	Q71	8I	D14	5G
IC3	5O	Q72	9J	D15	6E
IC4	8O	Q74	8J	D16	6G
IC6	4L	Q76	4N	D17	6E
IC7	2L	Q77	4O	D18	6G
IC8	10N	Q78	4O	D19	7E
IC9	11M	Q79	2N	D20	7G
IC10	8G	Q80	3J	D21	7E
IC12	12H	Q81	3I	D22	7G
IC13	10M	Q82	12H	D23	5G
IC14	9L	Q83	12H	D24	5G
IC15	10K	Q507	4C	D25	7G
IC16	4N	Q508	6B	D26	5G
IC500	11C	Q509	6B	D27	4O
IC501	12E	Q510	5B	D28	4O
IC502	6B	Q511	7B	D29	8I
IC503	6C	Q512	8B	D33	8M
IC504	9B	Q513	5D	D35	8M
IC505	9C	Q515	8C	D44	6J
IC506	11F	Q516	9B	D45	7J
IC508	13E	Q518	10E	D47	6K
IC900	2H	Q519	9D	D48	6J
IC901	3I	Q520	9F	D49	3J
Q2	8H	Q521	9F	D50	4G
Q3	9H	Q523	10F	D51	7E
Q13	5I	Q524	12F	D56	7O
Q14	9H	Q529	11D	D60	2D
Q15	9I	Q530	3C	D61	2D
Q17	8I	Q531	2B	D63	9N
Q18	9J	Q532	4C	D67	10I
Q21	7M	Q533	3B	D69	10H
Q22	6K	Q534	4C	D70	10H
Q23	6K	Q535	4B	D71	10H
Q29	7E	Q536	5C	D72	10I
Q32	6O	Q800	12N	D73	11H
Q33	5N	Q803	12L	D75	12J
Q34	5O	Q804	13L	D76	12I
Q35	5M	Q805	12N	D79	4N
Q38	6N	Q806	12M	D80	12J
Q39	4K	Q807	12M	D81	13H
Q40	7O	Q808	12M	D82	4M
Q46	5K	Q900	3H	D84	5M
Q47	4O	Q901	3I	D85	5M
Q48	5N	Q902	2I	D86	6J
Q49	5M	D1	3D	D87	6K
Q50	9N	D2	4D	D500	13E
Q52	11N	D3	4D	D501	13E
Q54	10M	D4	4D	D502	3B
Q60	10H	D5	3E	D503	3B
Q61	10H	D6	5E	D504	3B
Q62	10I	D7	4E	D505	4B
Q63	11I	D8	4G	D506	4B
Q64	10I	D9	4E	D507	4B
Q65	10I	D10	4G	D900	3H
Q67	11H	D11	5E	D901	3H
Q68	10J	D12	5G		

Component side

Layer 1

Layer 2

Foil side

TK-80 PC BOARD

TX-RX UNIT (X57-4660-21)

Component side view (J72-0382-41)

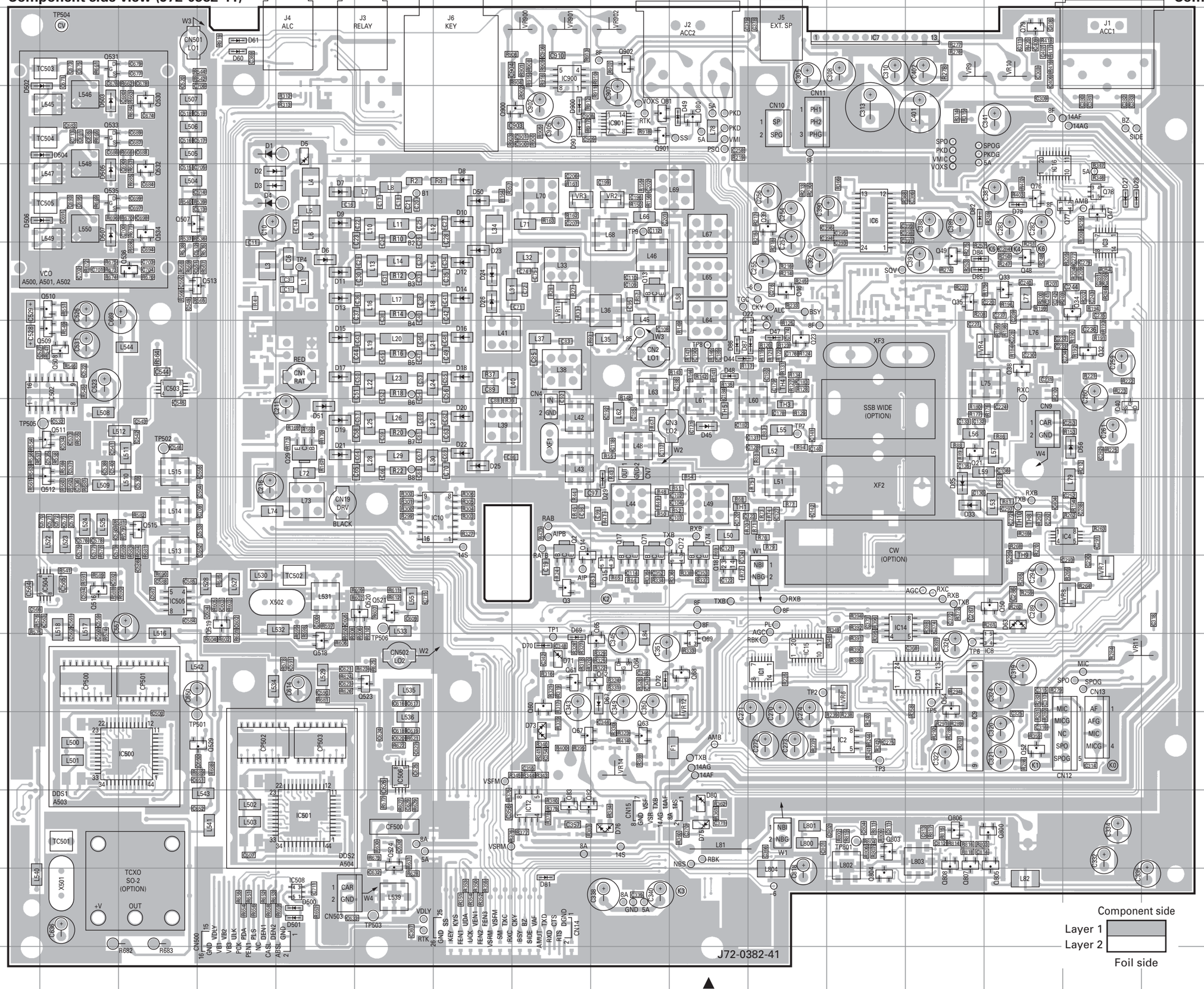

Ref. No.	Address	Ref. No.	Address	Ref. No.	Address
IC1	10K	Q69	10J	D13	5E
IC2	11L	Q71	8I	D14	5G
IC3	5O	Q72	9J	D15	6E
IC4	8O	Q74	8J	D16	6G
IC6	4L	Q76	4N	D17	6E
IC7	2L	Q77	4O	D18	6G
IC8	10N	Q78	4O	D19	7E
IC9	11M	Q79	2N	D20	7G
IC10	8G	Q80	3J	D21	7E
IC12	12H	Q81	3I	D22	7G
IC13	10M	Q82	12H	D23	5G
IC14	9L	Q83	12H	D24	5G
IC15	10K	Q507	4C	D25	7G
IC16	4N	Q508	6B	D26	5G
IC500	11C	Q509	6B	D27	4O
IC501	12E	Q510	5B	D28	4O
IC502	6B	Q511	7B	D29	8I
IC503	6C	Q512	8B	D33	8M
IC504	9B	Q513	5D	D35	8M
IC505	9C	Q515	8C	D44	6J
IC506	11F	Q516	9B	D45	7J
IC508	13E	Q518	10E	D47	6K
IC900	2H	Q519	9D	D48	6J
IC901	3I	Q520	9F	D49	3J
Q2	8H	Q521	9F	D50	4G
Q3	9H	Q523	10F	D51	7E
Q13	5I	Q524	12F	D56	7O
Q14	9H	Q529	11D	D60	2D
Q15	9I	Q530	3C	D61	2D
Q17	8I	Q531	2B	D63	9N
Q18	9J	Q532	4C	D67	10I
Q21	7M	Q533	3B	D69	10H
Q22	6K	Q534	4C	D70	10H
Q23	6K	Q535	4B	D71	10H
Q29	7E	Q536	5C	D72	10I
Q32	6O	Q800	12N	D73	11H
Q33	5N	Q803	12L	D75	12J
Q34	5O	Q804	13L	D76	12I
Q35	5M	Q805	12N	D79	4N
Q38	6N	Q806	12M	D80	12J
Q39	4K	Q807	12M	D81	13H
Q40	7O	Q808	12M	D82	4M
Q46	5K	Q900	3H	D84	5M
Q47	4O	Q901	3I	D85	5M
Q48	5N	Q902	2I	D86	6J
Q49	5M	D1	3D	D87	6K
Q50	9N	D2	4D	D500	13E
Q52	11N	D3	4D	D501	13E
Q54	10M	D4	4D	D502	3B
Q60	10H	D5	3E	D503	3B
Q61	10H	D6	5E	D504	3B
Q62	10I	D7	4E	D505	4B
Q63	11I	D8	4G	D506	4B
Q64	10I	D9	4E	D507	4B
Q65	10I	D10	4G	D900	3H
Q67	11H	D11	5E	D901	3H
Q68	10J	D12	5G		

Component side
Layer 1
Layer 2
Foil side

TK-80 PC BOARD

TX-RX UNIT (X57-4660-21)

Foil side view (J72-0382-41)

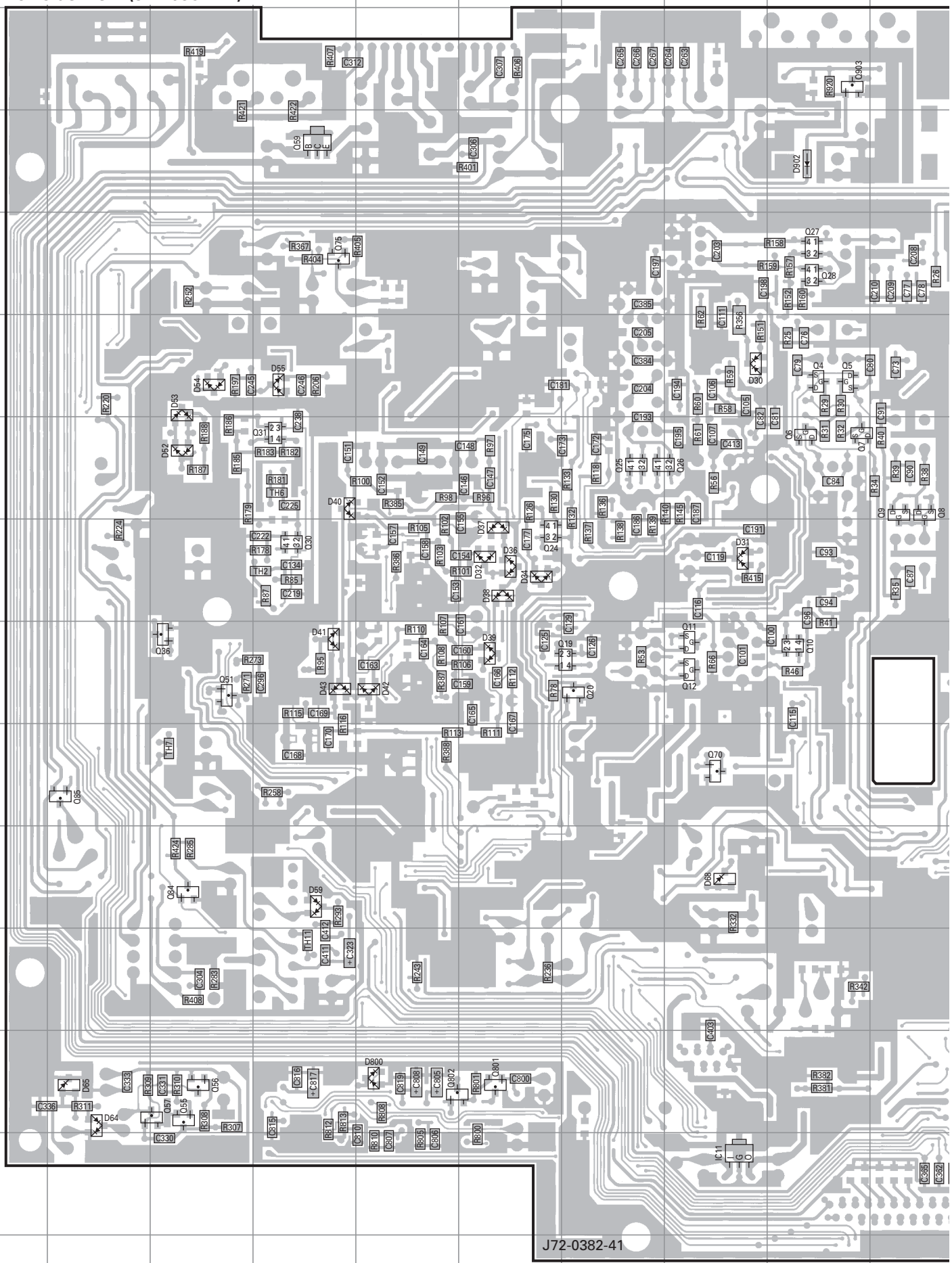

J72-0382-41

PC BOARD TK-80

TX-RX UNIT (X57-4660-21)

Foil side view (J72-0382-41)

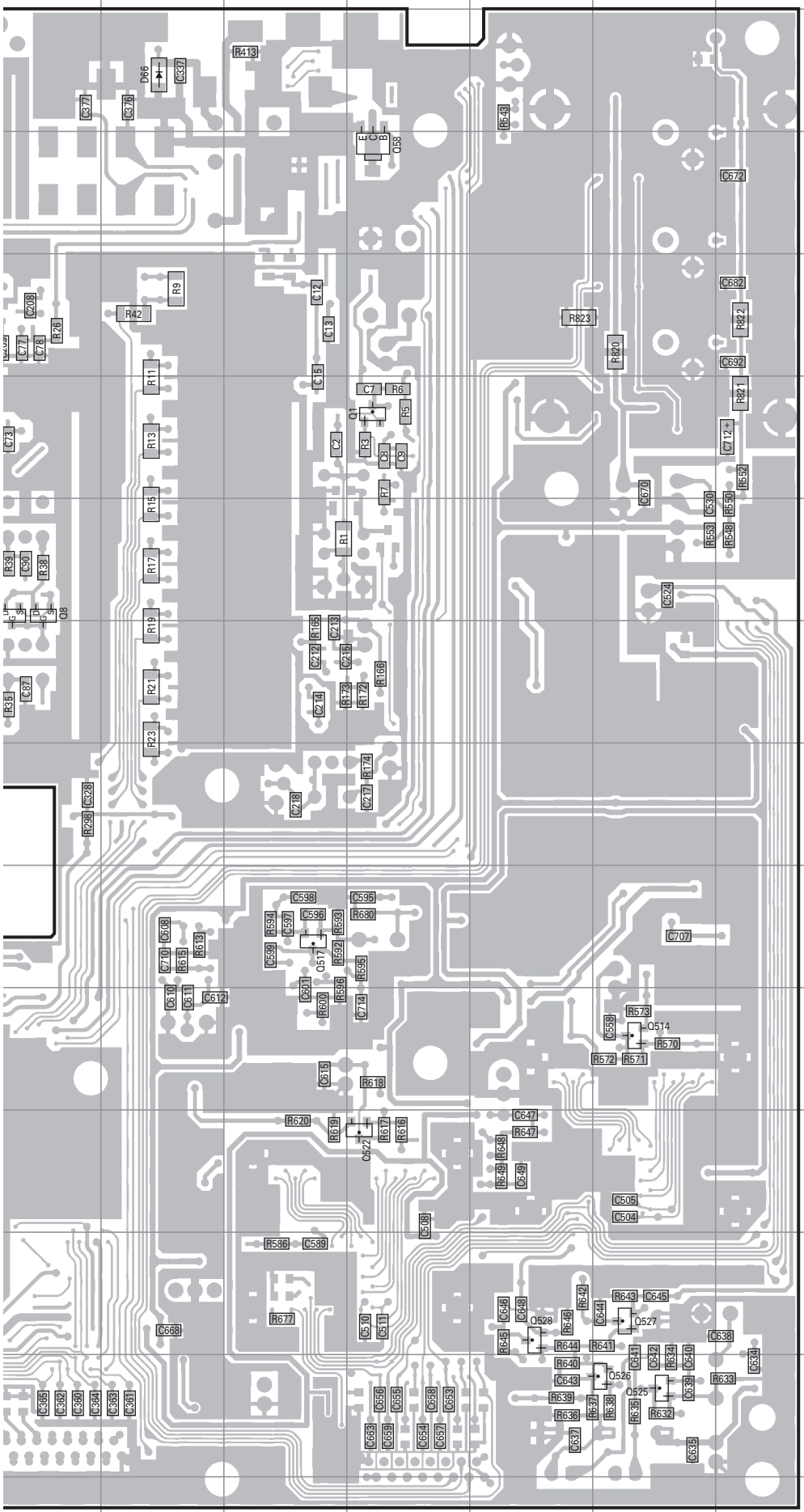

Ref. No.	Address	Ref. No.	Address
IC11	13H	Q517	9L
Q1	5M	Q522	11M
Q4	5I	Q525	13O
Q5	5I	Q526	13O
Q6	6I	Q527	12O
Q7	6I	Q528	12N
Q8	6J	Q801	12F
Q9	6J	Q802	12E
Q10	8I	Q903	2I
Q11	8H	D30	5H
Q12	8H	D31	7H
Q19	8G	D32	7F
Q20	8G	D34	7F
Q24	7F	D36	7F
Q25	5G	D37	7F
Q26	6H	D38	7F
Q27	4I	D39	8F
Q28	4I	D40	6D
Q30	7D	D41	8D
Q31	6D	D42	8E
Q36	8C	D43	8D
Q51	8C	D52	6C
Q55	12C	D53	5C
Q56	12C	D54	5C
Q57	12C	D55	5D
Q58	3M	D59	10D
Q59	3D	D64	12B
Q70	9H	D65	12B
Q75	4D	D66	2K
Q84	10C	D68	10H
Q85	9B	D800	12E
Q514	10O	D902	3I

Component side

Layer 1

Layer 2

Foil side

TK-80 PC BOARD

TX-RX UNIT (X57-4660-21)
Foil side view (J72-0382-41)

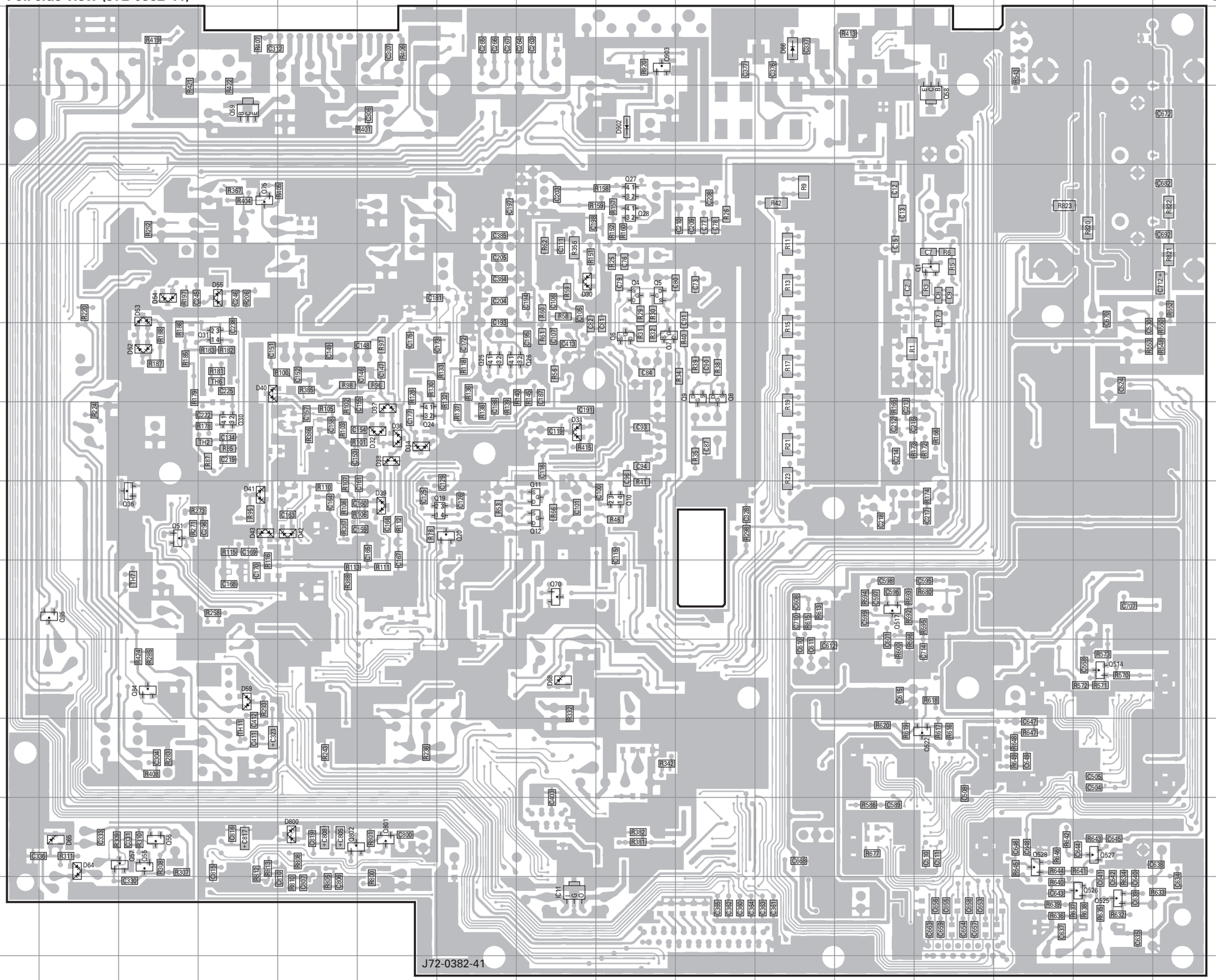

PC BOARD TK-80

TX-RX UNIT (X57-4660-21)
Foil side view (J72-0382-41)

Ref. No.	Address	Ref. No.	Address
IC11	13H	Q517	9L
Q1	5M	Q522	11M
Q4	5I	Q525	13O
Q5	5I	Q526	13O
Q6	6I	Q527	12O
Q7	6I	Q528	12N
Q8	6J	Q801	12F
Q9	6J	Q802	12E
Q10	8I	Q903	2I
Q11	8H	D30	5H
Q12	8H	D31	7H
Q19	8G	D32	7F
Q20	8G	D34	7F
Q24	7F	D36	7F
Q25	5G	D37	7F
Q26	6H	D38	7F
Q27	4I	D39	8F
Q28	4I	D40	6D
Q30	7D	D41	8D
Q31	6D	D42	8E
Q36	8C	D43	8D
Q51	8C	D52	6C
Q55	12C	D53	5C
Q56	12C	D54	5C
Q57	12C	D55	5D
Q58	3M	D59	10D
Q59	3D	D64	12B
Q70	9H	D65	12B
Q75	4D	D66	2K
Q84	10C	D68	10H
Q85	9B	D800	12E
Q514	10O	D902	3I

Component side
Layer 1
Layer 2
Foil side

INTERCONNECTION DIAGRAM

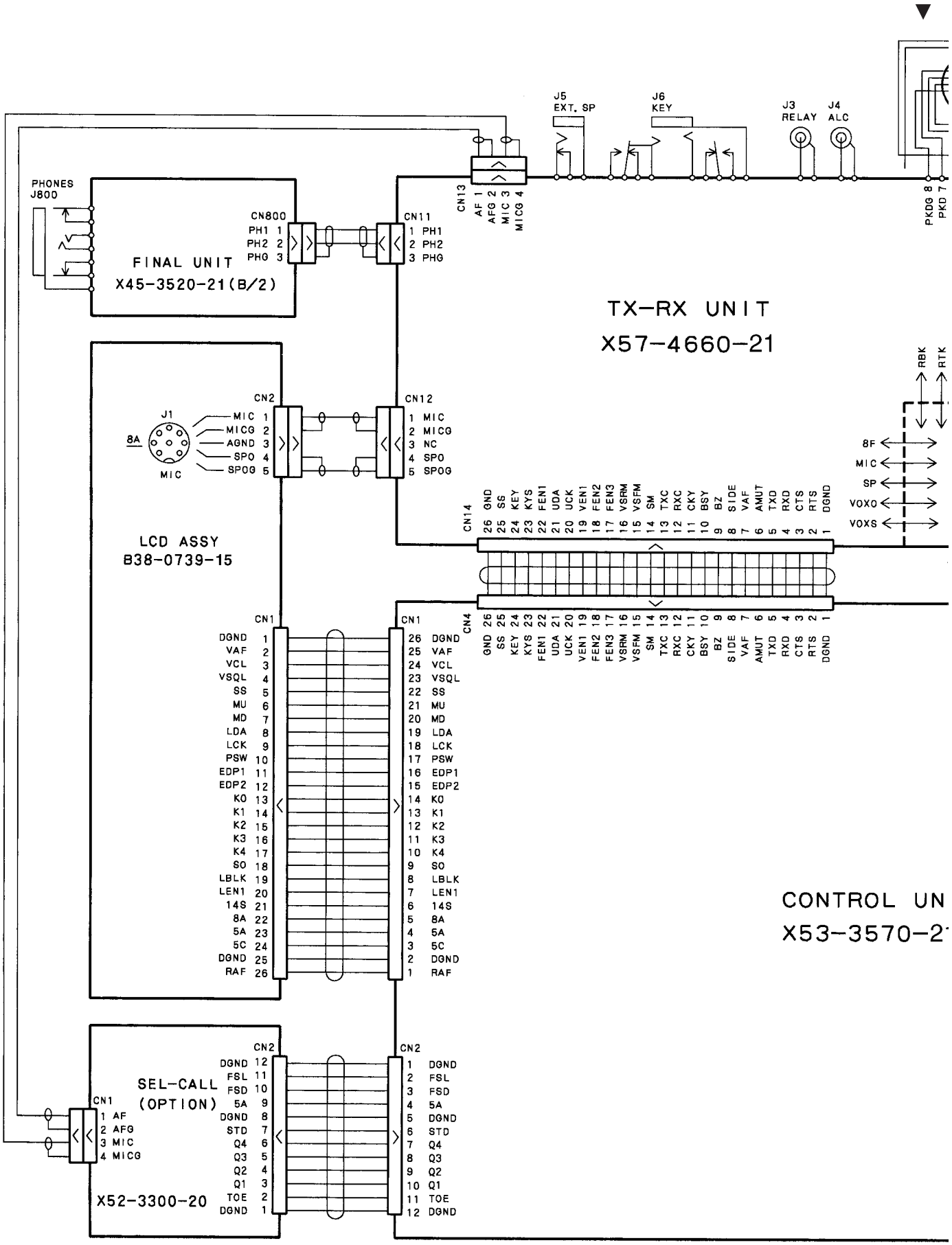

INTERCONNECTION DIAGRAM

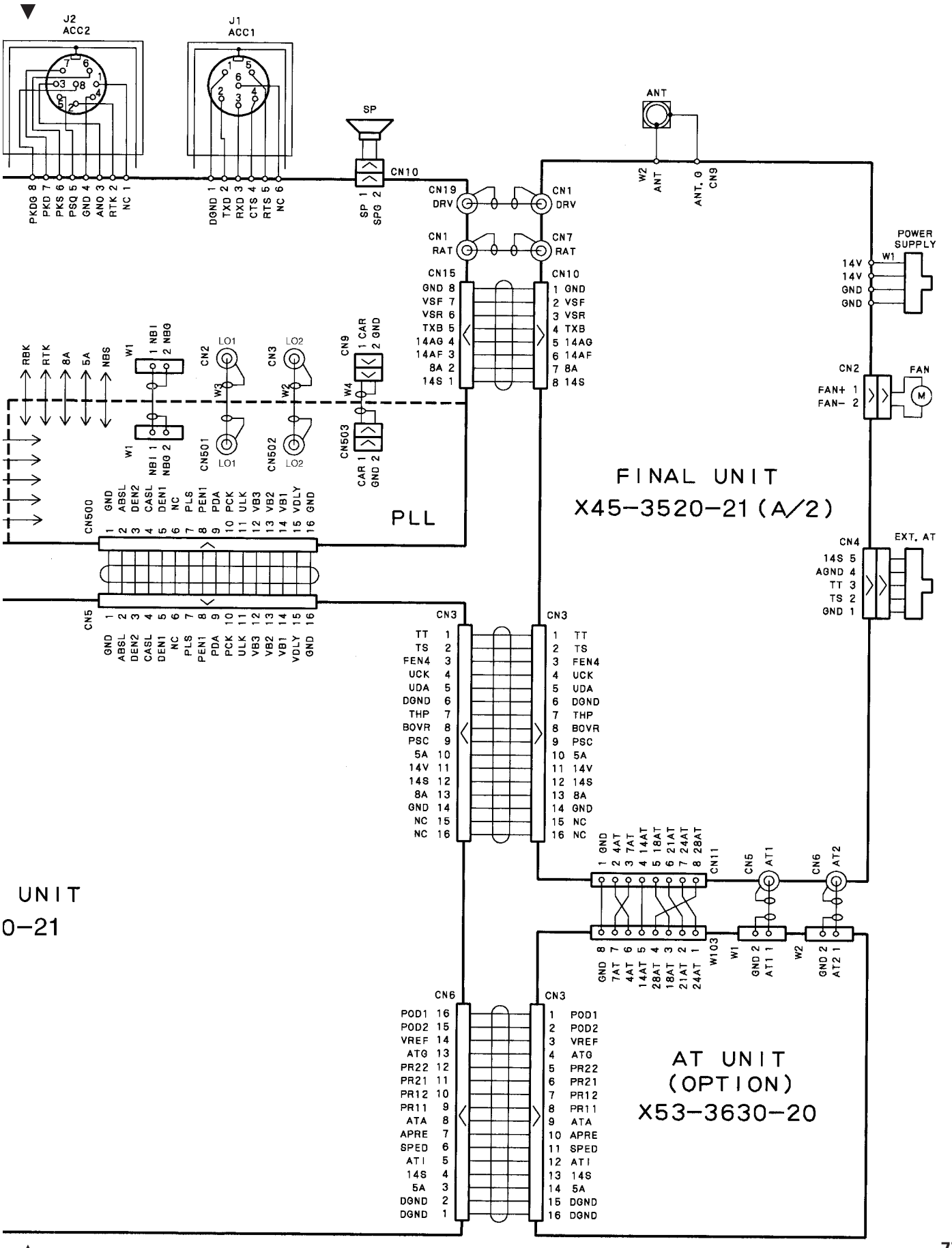

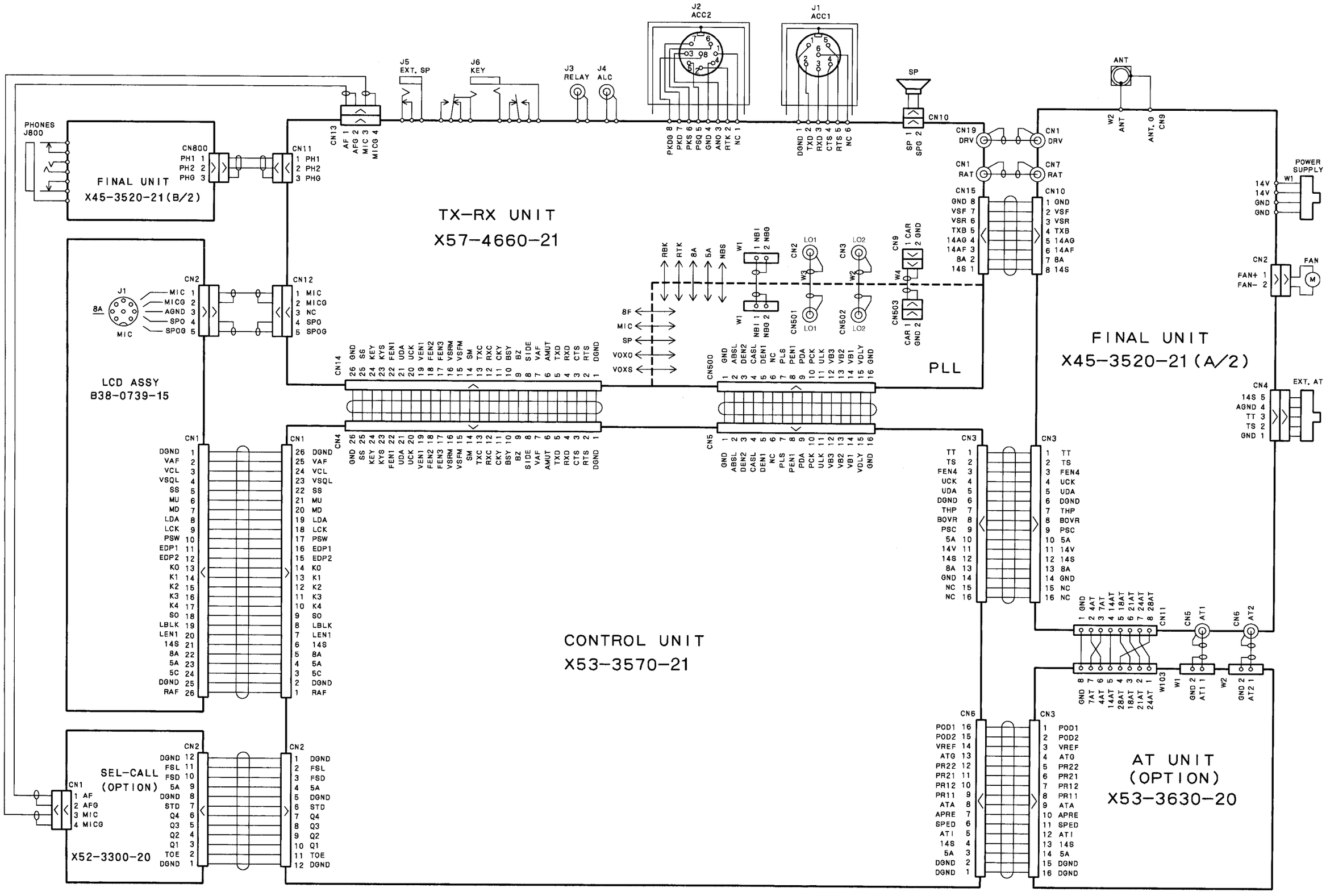

TX-RX UNIT
X57-4660-21
FINAL UNIT
X45-3520-21(B/2)
FINAL UNIT
X45-3520-21(A/2)
LCD ASSY
B38-0739-15
CONTROL UNIT
X53-3570-21
SEL-CALL
(OPTION)
X52-3300-20
AT UNIT
(OPTION)
X53-3630-20
PLL
PHONES
J800
J5
EXT. SP
J6
KEY
J3
RELAY
J4
ALC
J2
ACC2
J1
ACC1
SP
ANT
POWER
SUPPLY
FAN
EXT. AT

TK-80 SCHEMATIC DIAGRAM

LCD ASSY (B38-0739-15)

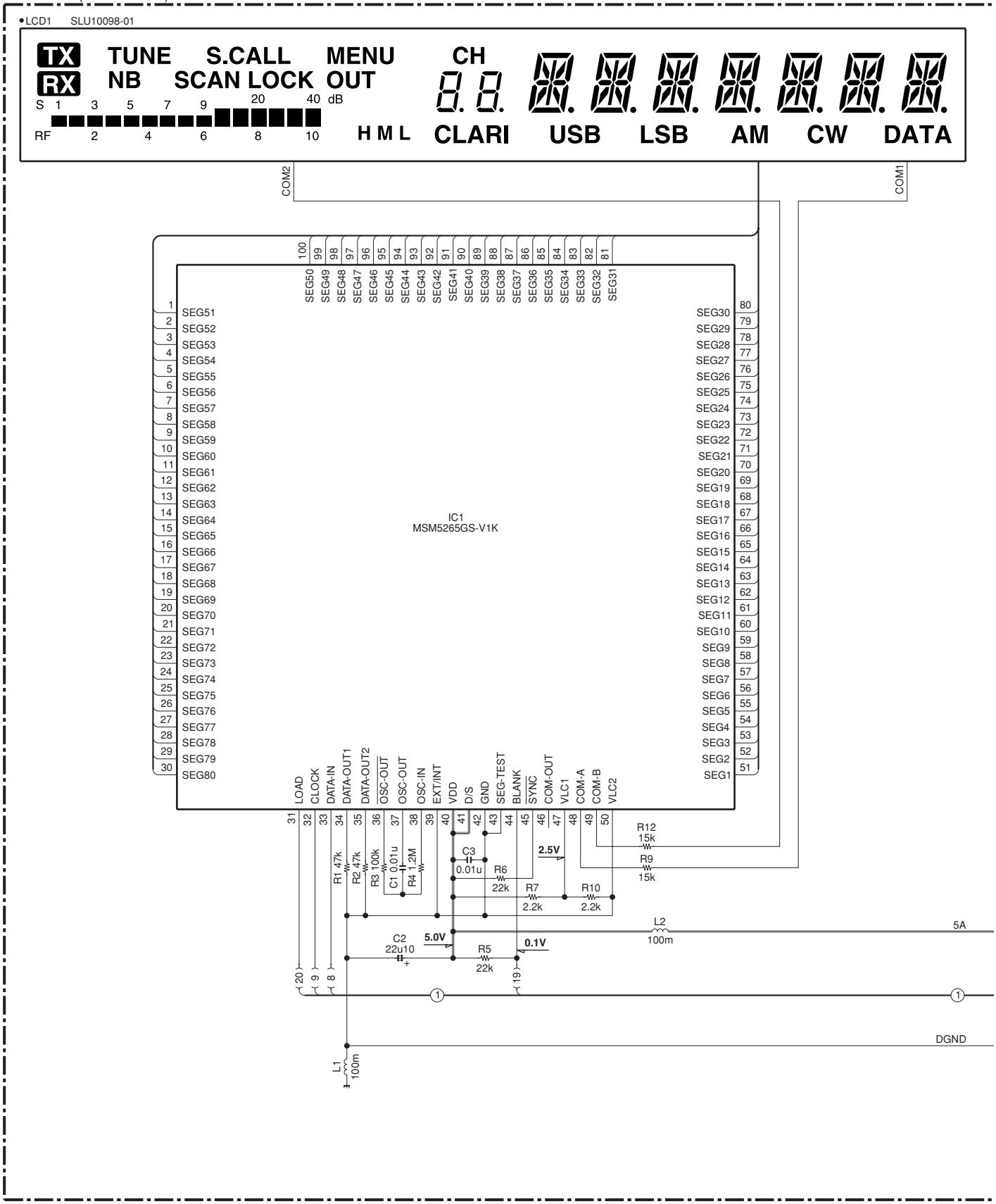

Note : The components marked with a dot (•) are parts of layer 1.

LCD ASSY (B38-0739-15)

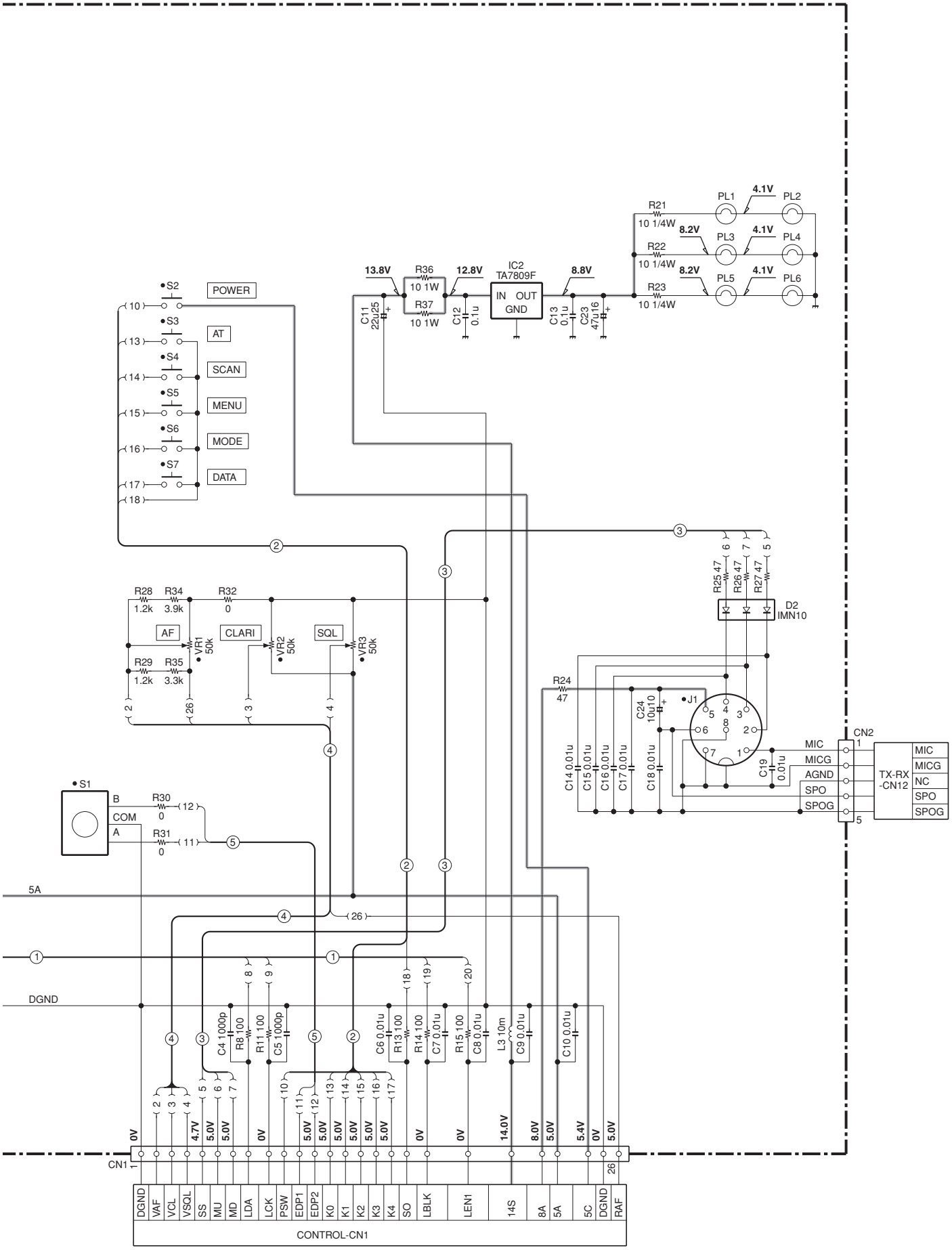

LCD ASSY (B38-0739-15)

•LCD1 SLU10098-01

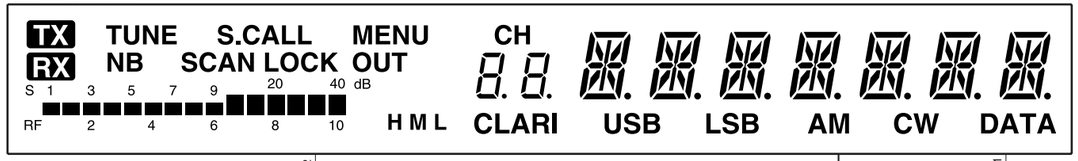

IC1
MSM5265GS-V1K

SEG1 – SEG80

LOAD, CLOCK, DATA-IN, DATA-OUT1, DATA-OUT2, OSC-OUT, OSC-OUT, OSC-IN, EXT/INT, VDD, D/S, GND, SEG-TEST, BLANK, SYNC, COM-OUT, VLC1, COM-A, COM-B, VLC2

COM2, COM1

R1 47k, R2 47k, R3 100k, C1 0.01u, R4 1.2M, C3 0.01u, R6 22k, R7 2.2k, R10 2.2k, R12 15k, R9 15k, 2.5V

C2 22u10 5.0V, R5 22k 0.1V, L2 100m, L1 100m

5A, 5A, DGND, DGND

S2 POWER
S3 AT
S4 SCAN
S5 MENU
S6 MODE
S7 DATA

R28 1.2k, R34 3.9k, R32 0
AF VR1 50k, CLARI VR2 50k, SQL VR3 50k
R29 1.2k, R35 3.3k

S1 B, COM, A
R30 0, R31 0

13.8V, R36 10 1W, R37 10 1W, 12.8V, C12 0.1u, IC2 TA7809F IN OUT GND, 8.8V, C13 0.1u, C23 47u16

R21 10 1/4W, R22 10 1/4W, R23 10 1/4W
PL1 4.1V PL2, 8.2V PL3 4.1V PL4, 8.2V PL5 4.1V PL6

R25 47, R26 47, R27 47, D2 IMN10

R24 47, C24 10u10, J1

C11 22u25, C14 0.01u, C15 0.01u, C16 0.01u, C17 0.01u, C18 0.01u, C19 0.01u

CN2 MIC, MICG, AGND, SPO, SPOG
TX-RX -CN12 MIC, MICG, NC, SPO, SPOG

C4 1000p, R8 100, R11 100, C5 1000p, C6 0.01u, R13 100, R14 100, C7 0.01u, R15 100, C8 0.01u, L3 10m, C9 0.01u, C10 0.01u

CN1 1 – 26: 0V, 4.7V, 5.0V, 0V, 5.0V, 5.0V, 0V, 5.0V, 5.0V, 5.0V, 5.0V, 5.0V, 5.0V, 0V, 0V, 14.0V, 8.0V, 5.0V, 5.4V, 0V, 5.0V

CONTROL-CN1: DGND, VAF, VCL, VSQL, SS, MU, MD, LDA, LCK, PSW, EDP1, EDP2, K0, K1, K2, K3, K4, SO, LBLK, LEN1, 14S, 8A, 5A, 5C, DGND, RAF

TK-80 SCHEMATIC DIAGRAM

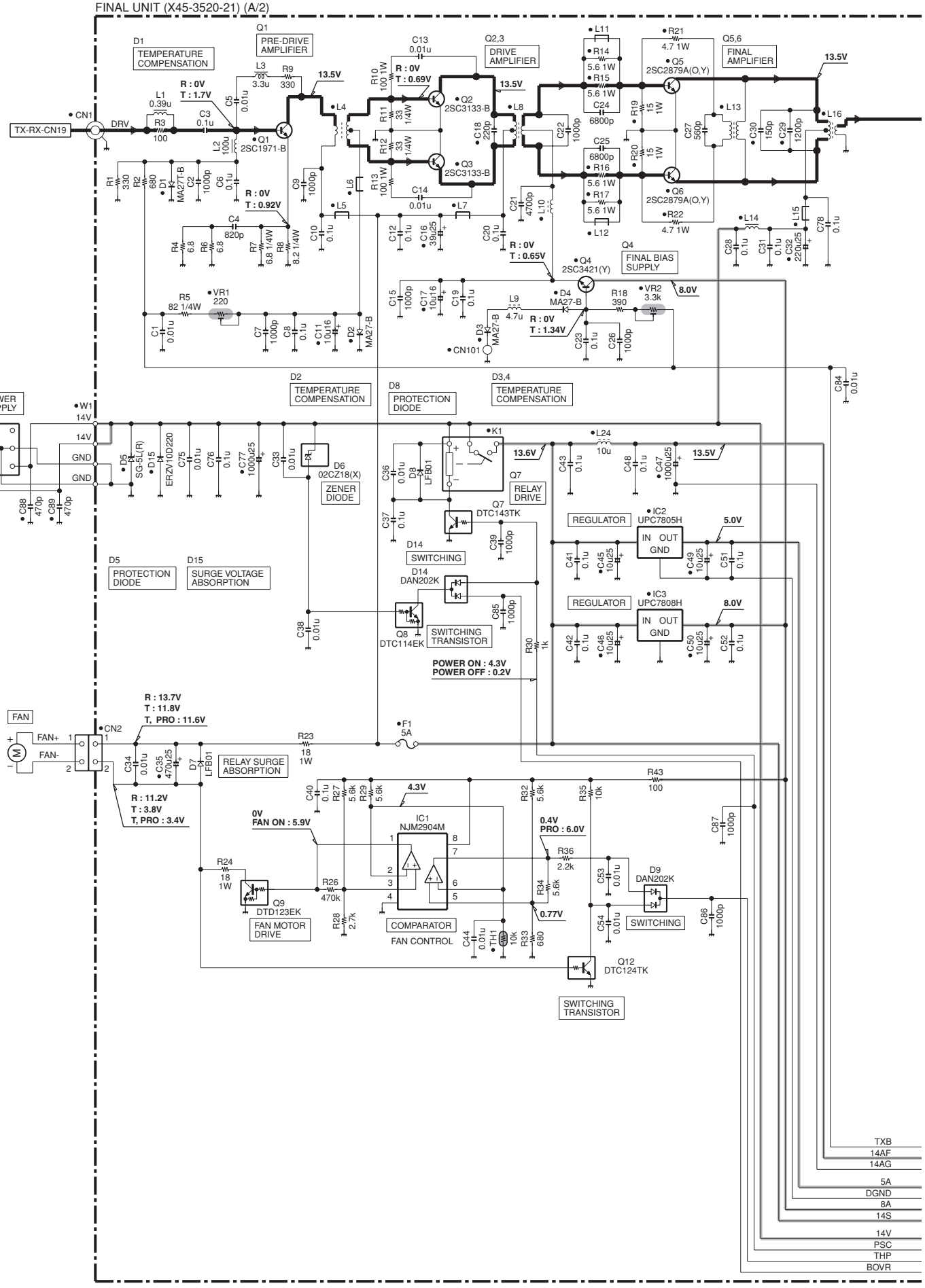

SCHEMATIC DIAGRAM TK-80

FINAL UNIT (X45-3520-21) (A/2)

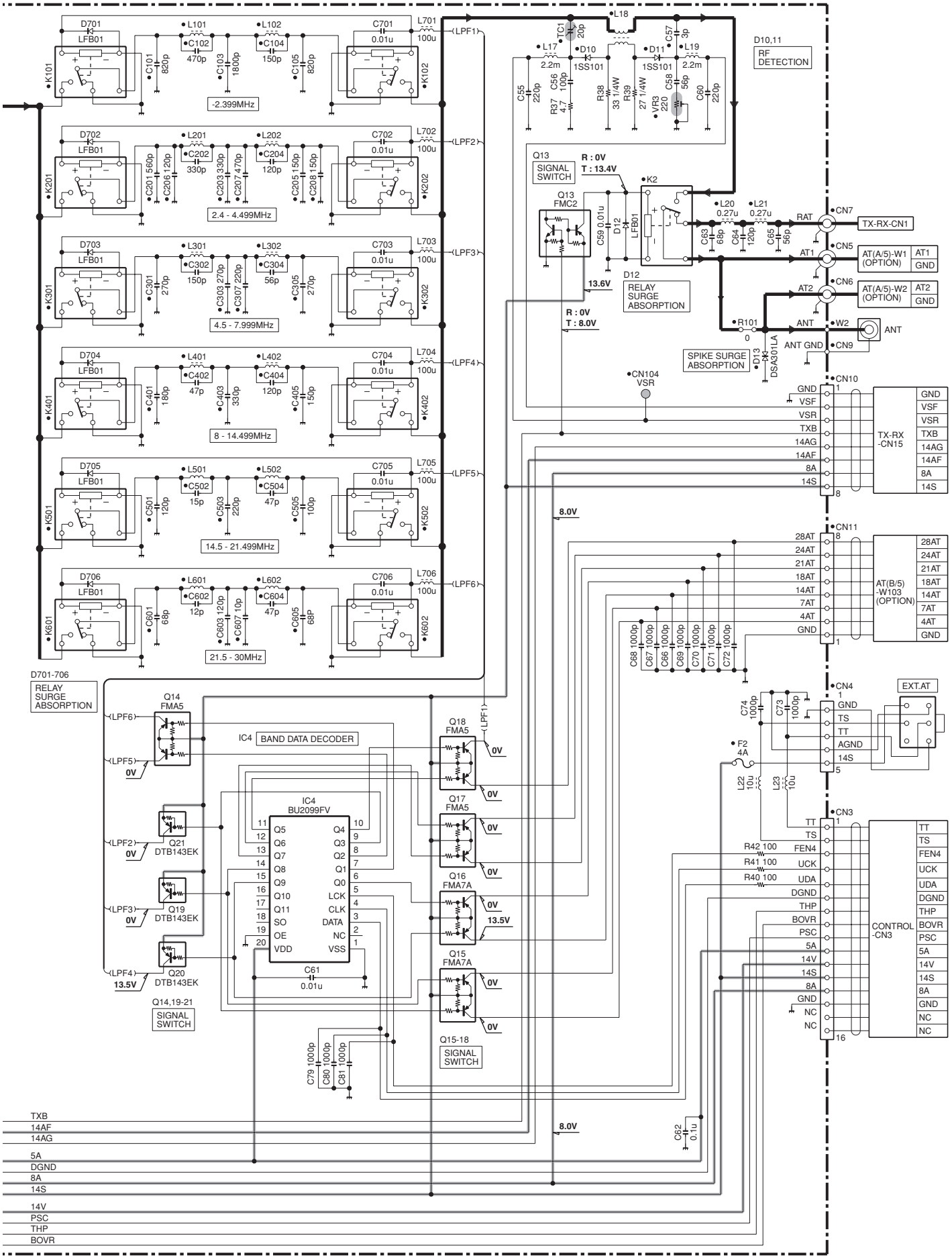

Note : The components marked with a dot (•) are parts of layer 1.

FINAL UNIT (X45-3520-21) (A/2)

TX-RX-CN19 • CN1 DRV

Q1 PRE-DRIVE AMPLIFIER: Q1 2SC1971-B; L1 0.39u; L2 100u; L3 3.3u; R1 330; R2 680; R3 100; R4 68; R5 82 1/4W; R6 6.8; R7 6.8 1/4W; R8 8.2 1/4W; R9 330; C1 0.01u; C2 1000p; C3 0.1u; C4 820p; C5 0.01u; C6 0.1u; C7 100p; C8 0.1u; C9 1000p; C10 0.1u; C11 10u16; D1 MA277-B; D2 MA27-B; VR1 220; R : 0V T : 1.7V; 13.5V; R : 0V T : 0.92V

Q2,3 DRIVE AMPLIFIER: Q2 2SC3133-B; Q3 2SC3133-B; R10 100 1/4W; R11 33 1/4W; R12 33 1/4W; R13 100 1/4W; C13 0.01u; C14 0.01u; C18 220p; C21 4700p; C22 1000p; L4; L5; L6; L7; L8; L10; R : 0V T : 0.69V; 13.5V; R : 0V T : 0.65V

Q5,6 FINAL AMPLIFIER: Q5 2SC2879A(O,Y); Q6 2SC2879A(O,Y); L11; L12; L13; L14; L15; L16; R14 5.6 1W; R15 5.6 1W; R16 5.6 1W; R17 5.6 1W; R19 15 1W; R20 15 1W; R21 4.7 1W; R22 4.7 1W; C24 6800p; C25 6800p; C27 560p; C28 1200p; C30 150p; C31 1u; C32 220u25; C78 0.1u; 13.5V

Q4 FINAL BIAS SUPPLY: Q4 2SC3421(Y); D4 MA27-B; D3 MA27-B; CN101; VR2 3.3k; R18 390; L9 4.7u; C15 1000p; C16 39u25; C17 10u16; C19 0.1u; C20 0.1u; C23 0.1u; C26 1000p; R : 0V T : 1.34V; 8.0V

D1 TEMPERATURE COMPENSATION

D2 TEMPERATURE COMPENSATION

D8 PROTECTION DIODE

D3,4 TEMPERATURE COMPENSATION

C84 0.01u

POWER SUPPLY • W1 14V GND GND

D5 SG-5L(R); D15 ERZV10D220; C75 0.01u; C76 0.1u; C77 1000u25; C88 470p; C89 470p

D6 02CZ18(X) ZENER DIODE

C33 0.01u

D5 PROTECTION DIODE

D15 SURGE VOLTAGE ABSORPTION

K1 LFB01; D8 LFB01; C36 0.01u; C37 0.1u; 13.6V

Q7 RELAY DRIVE: Q7 DTC143TK; C39 1000p

D14 SWITCHING: D14 DAN202K; Q8 DTC114EK; SWITCHING TRANSISTOR; C85 1000p; R30 1k

POWER ON : 4.3V
POWER OFF : 0.2V

L24 10u; C43 0.1u; C48 0.1u; C47 1000u25; 13.5V

REGULATOR: IC2 UPC7805H (IN OUT GND) 5.0V; C41 0.1u; C45 10u25; C49 10u25; C51 0.1u

REGULATOR: IC3 UPC7808H (IN OUT GND) 8.0V; C42 0.1u; C46 10u25; C50 10u25; C52 0.1u

R : 13.7V
T : 11.8V
T, PRO : 11.6V

FAN • CN2 FAN+ FAN-

R : 11.2V
T : 3.8V
T, PRO : 3.4V

C34 0.01u; C35 470u25; D7 LFB01; RELAY SURGE ABSORPTION

R23 18 1W; F1 5A; R43 100; C87 1000p

IC1 NJM2904M

0V FAN ON : 5.9V

4.3V

0.4V PRO : 6.0V

0.77V

C40 0.1u; R27 5.6k; R29 5.6k; R32 5.6k; R35 10k; R36 2.2k; R34 5.6k; R24 18 1W; R26 470k; R28 2.7k; C53 0.01u; C54 0.01u; D9 DAN202K; SWITCHING

Q9 DTD123EK; FAN MOTOR DRIVE

COMPARATOR FAN CONTROL

C44 0.01u; TH1 10k; R33 680

Q12 DTC124TK; SWITCHING TRANSISTOR

C86 1000p

D701-706 RELAY SURGE ABSORPTION

D701 LFB01; K101; L101; C102 470p; C101 820p; C103 1800p; L102; C104 150p; C105 820p; C701 0.01u; L701 100u; K102; (LPF1)

-2.399MHz

D702 LFB01; K201; L201; C202 330p; C201 560p; C206 120p; L202; C204 120p; C205 150p; C208 150p; C702 0.01u; L702 100u; K202; (LPF2)

2.4 - 4.499MHz

D703 LFB01; K301; L301; C302 150p; C301 270p; C303 270p; C307 220p; L302; C304 56p; C305 270p; C703 0.01u; L703 100u; K302; (LPF3)

4.5 - 7.999MHz

D704 LFB01; K401; L401; C402 47p; C401 180p; C403 330p; L402; C404 120p; C405 150p; C704 0.01u; L704 100u; K402; (LPF4)

8 - 14.499MHz

D705 LFB01; K501; L501; C502 15p; C501 120p; C503 220p; L502; C504 47p; C505 100p; C705 0.01u; L705 100u; K502; (LPF5)

14.5 - 21.499MHz

D706 LFB01; K601; L601; C602 12p; C601 68p; C603 120p; C607 10p; L602; C604 47p; C605 68p; C706 0.01u; L706 100u; K602; (LPF6)

21.5 - 30MHz

Q14 FMA5; (LPF6); (LPF5); 0V

Q21 DTB143EK; (LPF2); 0V

Q19 DTB143EK; (LPF3); 0V

Q20 DTB143EK; (LPF4); 13.5V

Q14,19-21 SIGNAL SWITCH

IC4 BAND DATA DECODER

IC4 BU2099FV
Q5 Q6 Q7 Q8 Q9 Q10 Q11 SO OE VDD
Q4 Q3 Q2 Q1 Q0 LCK CLK DATA NC VSS

C61 0.01u

Q18 FMA5; (LPF1); 0V

Q17 FMA5; 0V

Q16 FMA7A; 0V; 13.5V

Q15 FMA7A; 0V

Q15-18 SIGNAL SWITCH

C79 1000p; C80 1000p; C81 1000p

C62 0.1u; 8.0V

D10,11 RF DETECTION

TC1 20p; L17 2.2m; D10 1SS101; D11 1SS101; L18; C57 3p; L19 2.2m; C55 220p; C56 100p; R37 4.7; R38 33 1/4W; R39 27 1/4W; VR3 22k; C58 56p; C60 220p

Q13 SIGNAL SWITCH: Q13 FMC2; R : 0V T : 13.4V; K2; C59 0.01u; D12 LFB01; 13.6V

D12 RELAY SURGE ABSORPTION

L20 0.27u; L21 0.27u; C63 68p; C64 120p; C65 56p; RAT; ANT; ANT GND; CN7 TX-RX-CN1; CN5 AT(A/5)-W1 (OPTION) AT1 GND; CN6 AT(A/5)-W2 (OPTION) AT2 GND; W2 ANT; CN9

R : 0V T : 8.0V

R101 0

SPIKE SURGE ABSORPTION: D13 DSA301LA

CN104 VSR

CN10: GND VSF VSR TXB 14AG 14AF 8A 14S → TX-RX -CN15

8.0V

CN11: 28AT 24AT 21AT 18AT 14AT 7AT 4AT GND → AT(B/5) -W103 (OPTION)

C68 1000p; C67 1000p; C66 1000p; C69 1000p; C70 1000p; C71 1000p; C72 1000p

CN4: GND TS TT AGND 14S → EXT.AT

C74 1000p; C73 1000p; F2 4A; L22 10u; L23 10u

CN3: TT TS FEN4 UCK UDA DGND THP BOVR PSC 5A 14V 14S 8A GND NC NC → CONTROL -CN3

R42 100; R41 100; R40 100

TXB 14AF 14AG
5A DGND 8A 14S
14V PSC THP BOVR

TK-80 SCHEMATIC DIAGRAM

CONTROL UNIT (X53-3570-21)

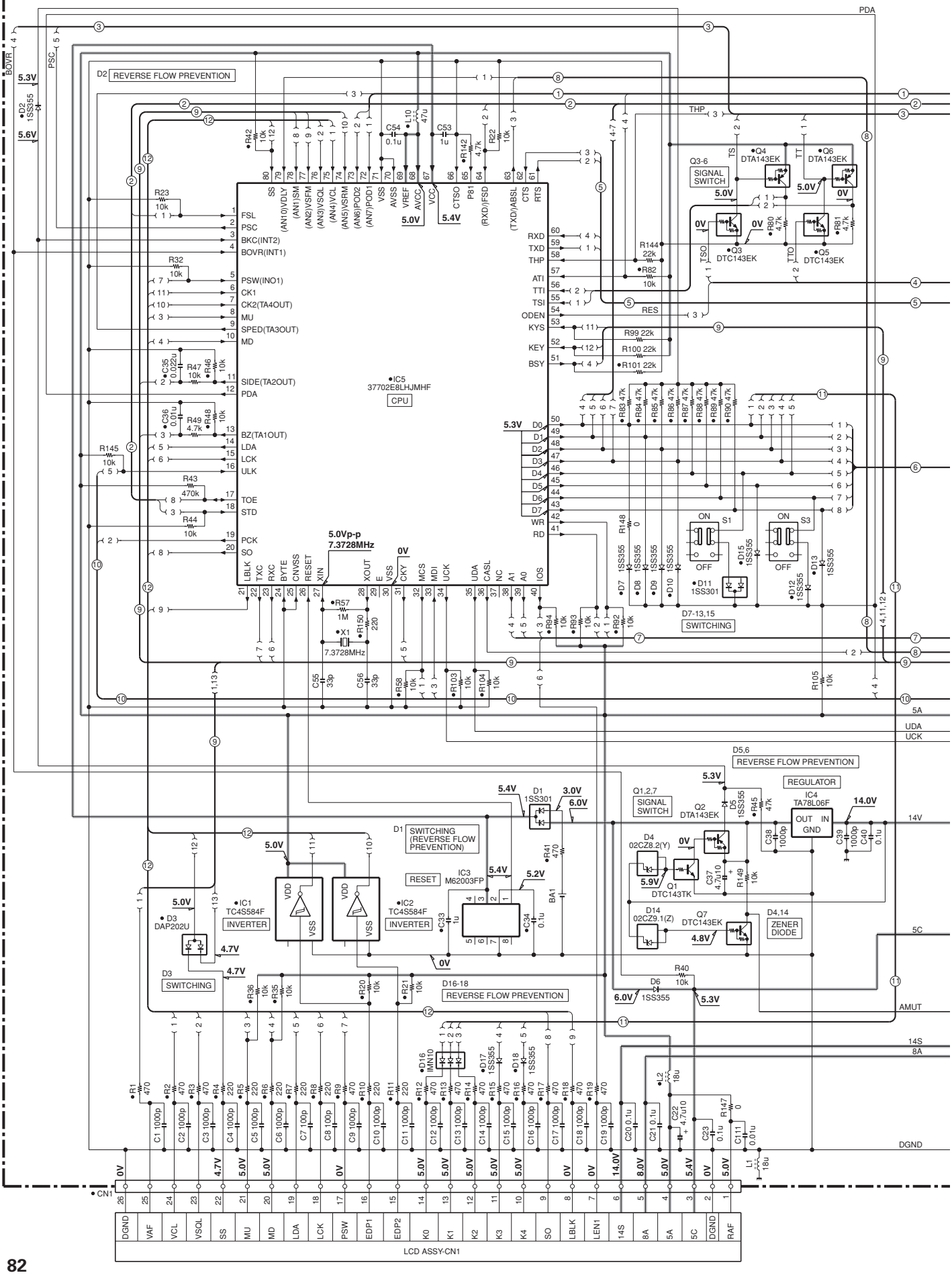

SCHEMATIC DIAGRAM TK-80

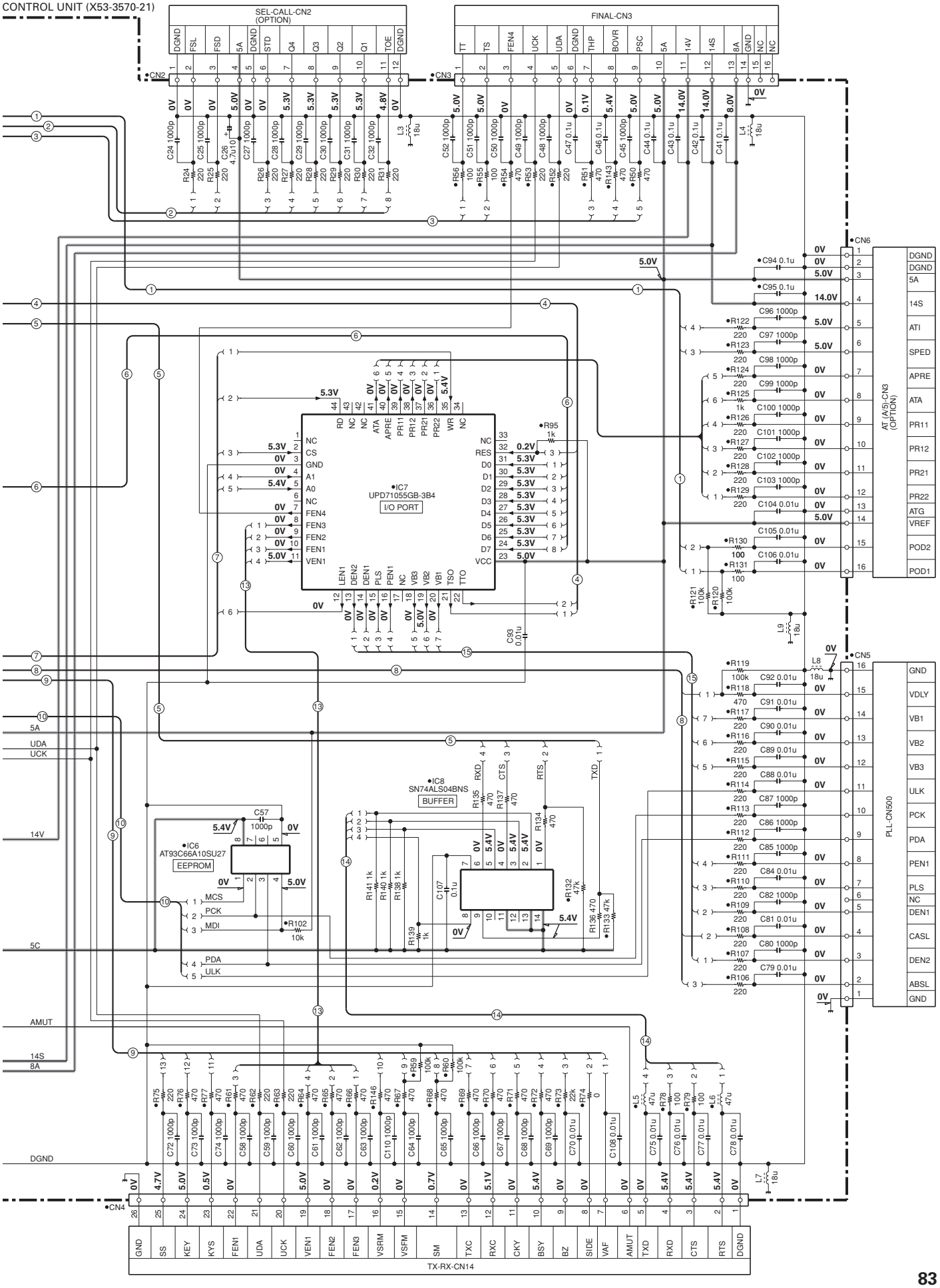

Note : The components marked with a dot (•) are parts of layer 1.

CONTROL UNIT (X53-3570-21)

SEL-CALL-CN2 (OPTION)

FINAL-CN3

IC5 37702E8LHJMHF CPU

IC7 UPD71055GB-3B4 I/O PORT

IC8 SN74ALS04BNS BUFFER

IC6 AT93C66A10SU27 EEPROM

IC1 TC4S584F INVERTER

IC2 TC4S584F INVERTER

IC3 M62003FP RESET

IC4 TA78L06F REGULATOR

D1 SWITCHING (REVERSE FLOW PREVENTION)

D2 REVERSE FLOW PREVENTION

D3 SWITCHING

D5,6 REVERSE FLOW PREVENTION

D7-13,15 SWITCHING

D16-18 REVERSE FLOW PREVENTION

Q1,2,7 SIGNAL SWITCH

Q3-6 SIGNAL SWITCH

D4,14 ZENER DIODE

X1 7.3728MHz

5.0Vp-p 7.3728MHz

CN1 LCD ASSY-CN1

CN2 SEL-CALL-CN2 (OPTION)

CN3 FINAL-CN3

CN4 TX-RX-CN14

CN5 PLL-CN500

CN6 AT (AUS)-CN3 (OPTION)

TK-80 SCHEMATIC DIAGRAM

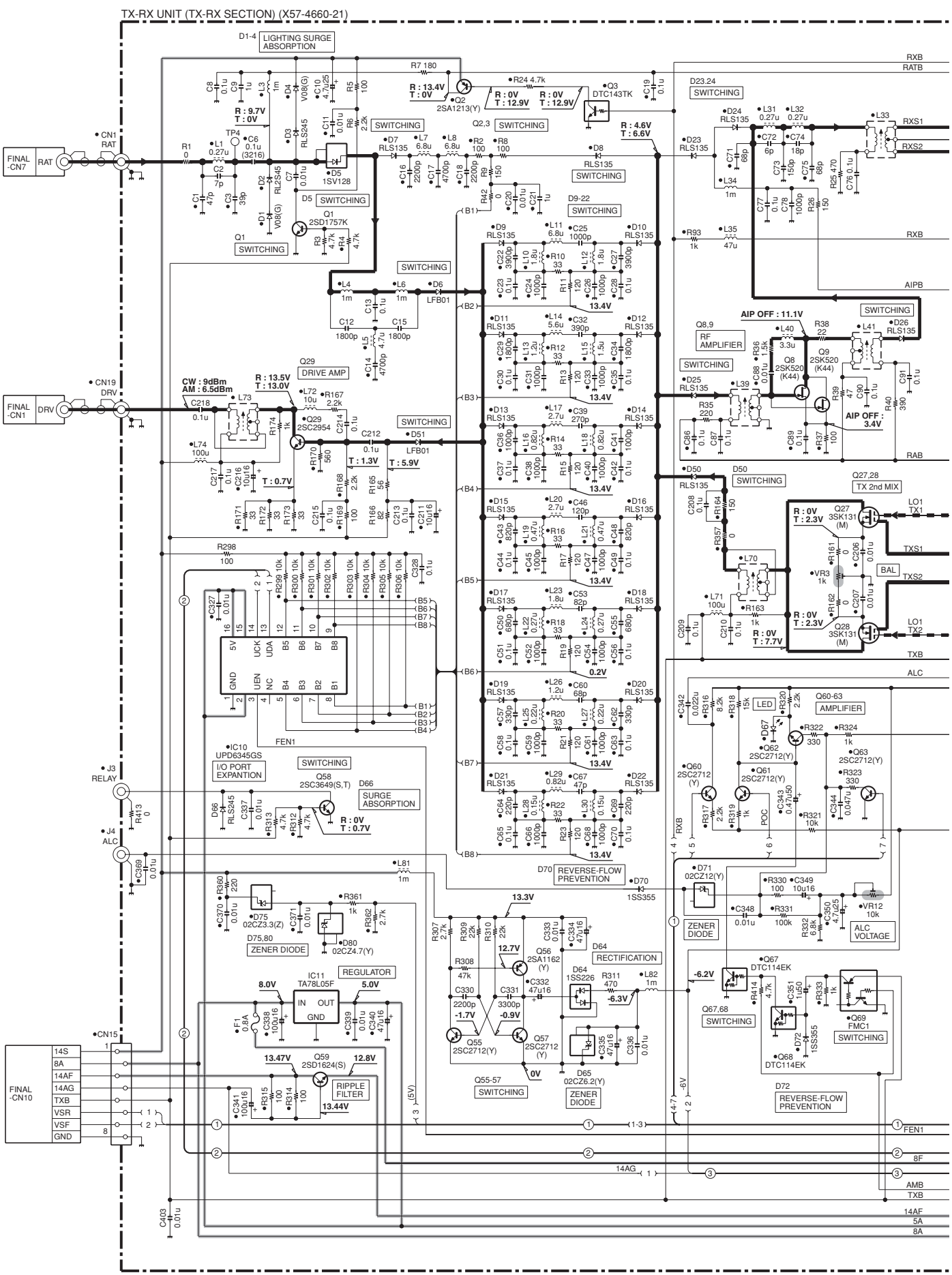

Note : The components marked with a dot (•) are parts of layer 1.

SCHEMATIC DIAGRAM TK-80

TX-RX UNIT (TX-RX SECTION)
(X57-4660-21)

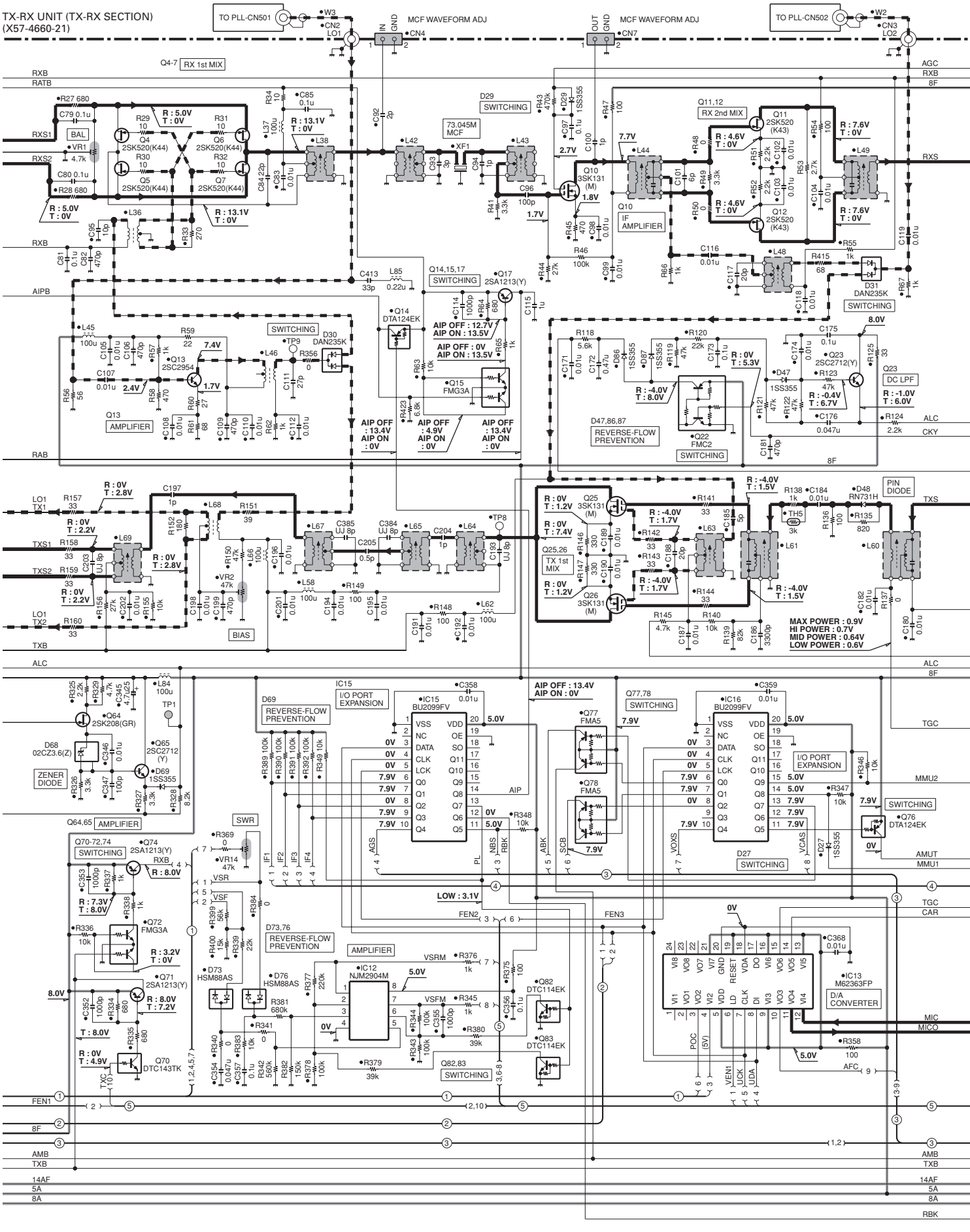

TK-80 SCHEMATIC DIAGRAM

TX-RX UNIT (TX-RX SECTION) (X57-4660-21)

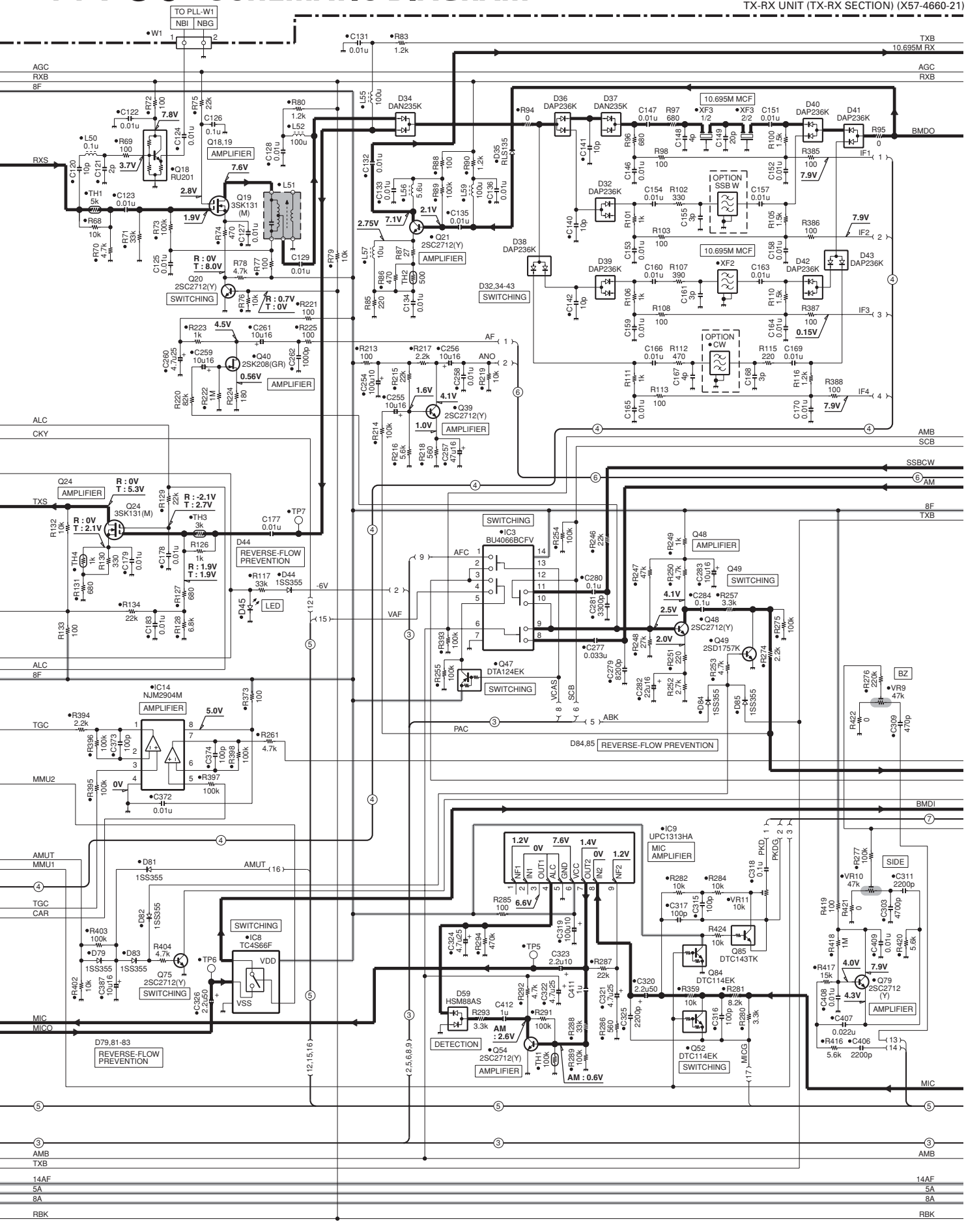

SCHEMATIC DIAGRAM TK-80

TX-RX UNIT (TX-RX SECTION) (X57-4660-21)

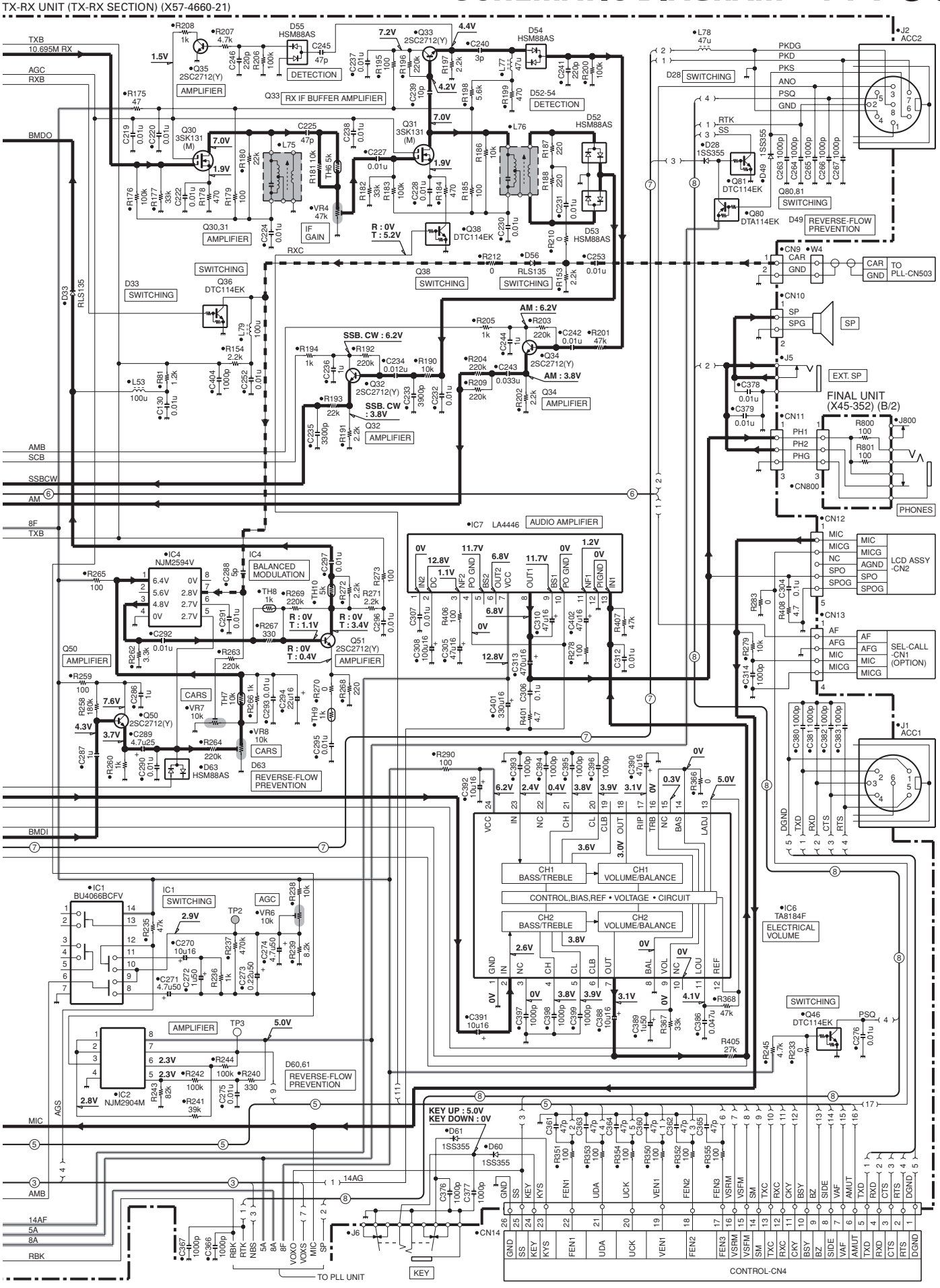

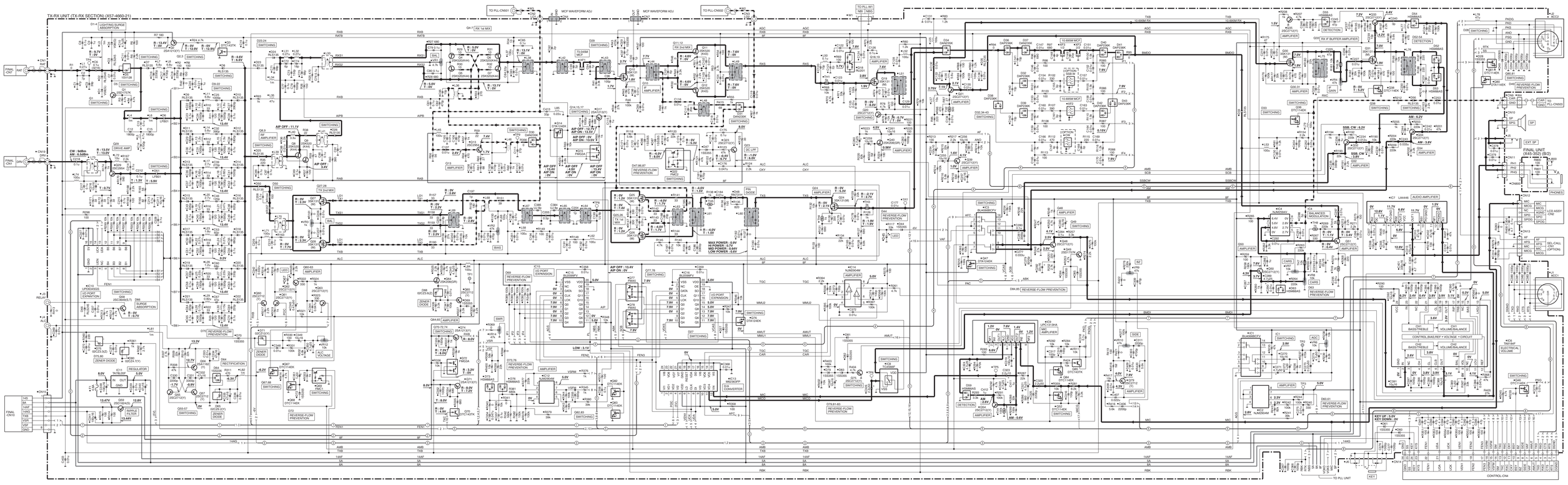
TX-RX UNIT (TX-RX SECTION) (X57-4660-21)
FINAL ANT
FINAL ANT
FINAL CN10
CN10
CN9
CN1
CN2
CN3
CN4
CN5
CN6
CN7
CN8
CN11
CN12
CN13
CN14
CN15
CN16
CN17
CN18
CN19
CN20
CN21
CN22
CN23
CN24
CN25
CN26
CN27
CN28
CN29
CN30
CN31
CN32
CN33
CN34
CN35
CN36
CN37
CN38
CN39
CN40
CN41
CN42
CN43
CN44
CN45
CN46
CN47
CN48
CN49
CN50

TK-80 SCHEMATIC DIAGRAM

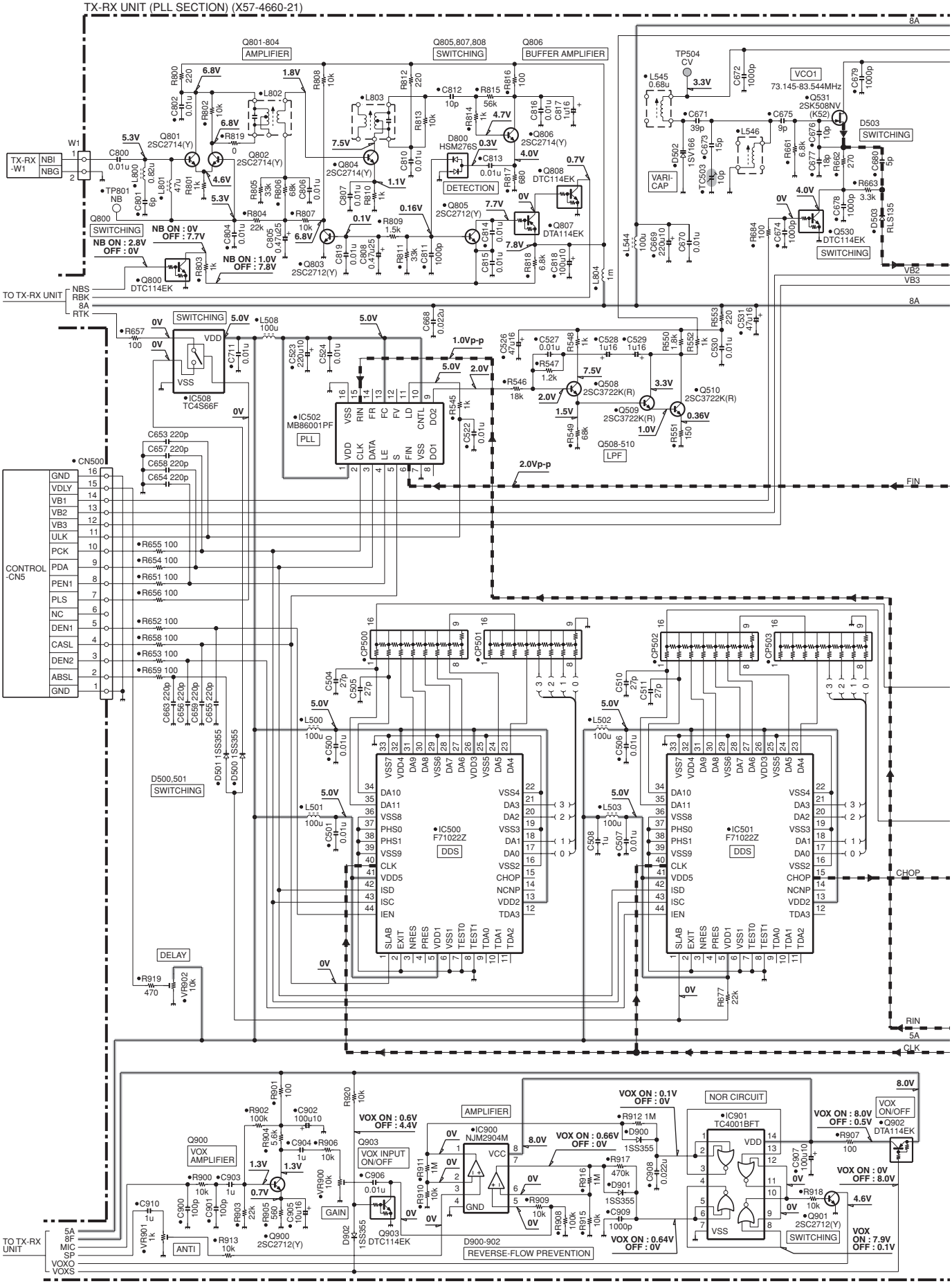

SCHEMATIC DIAGRAM TK-80

TX-RX UNIT (PLL SECTION) (X57-4660-21)

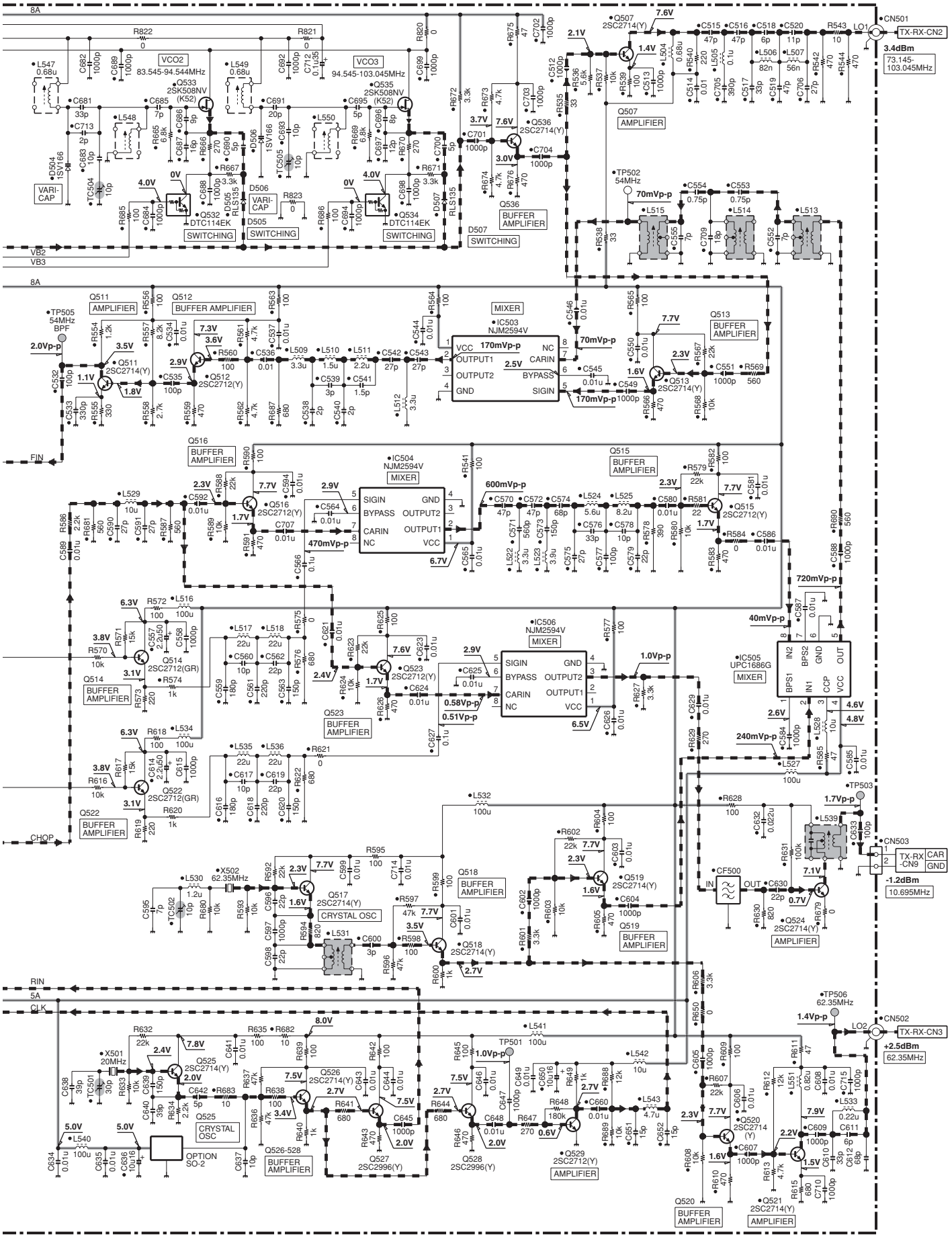

Note : The components marked with a dot (•) are parts of layer 1.

TX-RX UNIT (PLL SECTION) (X57-4660-21)

Q801-804 AMPLIFIER
Q805,807,808 SWITCHING
Q806 BUFFER AMPLIFIER
Q800 SWITCHING
Q803 2SC2712(Y)
Q804 2SC2714(Y)
Q805 2SC2712(Y)
Q806 2SC2714(Y)
Q807 DTA114EK
Q808 DTC114EK
D800 HSM276S
DETECTION
NB ON : 0V OFF : 7.7V
NB ON : 2.8V OFF : 0V
NB ON : 1.0V OFF : 7.8V
TX-RX -W1 NBI NBG
TO TX-RX UNIT NBS RBK 8A RTK

TP504 CV
VCO1 73.145-83.544MHz Q531 2SK508NV (K52)
VCO2 83.545-94.544MHz Q533 2SK508NV (K52)
VCO3 94.545-103.045MHz Q535 2SK508NV (K52)
D502 1SV166
D504 1SV166
D505 1SV166
D503 SWITCHING
D506 VARI-CAP
D507 SWITCHING
VARI-CAP
SWITCHING
Q530 DTC114EK
Q532 DTC114EK
Q534 DTC114EK
VB2 VB3

Q507 2SC2714(Y)
Q507 AMPLIFIER
Q536 2SC2714(Y)
Q536 BUFFER AMPLIFIER
TP502 54MHz
CN501 TX-RX-CN2
3.4dBm 73.145-103.045MHz

Q511 AMPLIFIER
Q512 BUFFER AMPLIFIER
TP505 54MHz BPF
IC503 NJM2594V MIXER
Q513 BUFFER AMPLIFIER
Q513 2SC2714(Y)
FIN

IC508 TC4S66F SWITCHING
IC502 MB86001PF PLL
Q508-510 LPF
CONTROL -CN5
CN500

Q516 BUFFER AMPLIFIER
IC504 NJM2594V MIXER
Q515 BUFFER AMPLIFIER
Q515 2SC2712(Y)
IC505 UPC1686G MIXER
720mVp-p
40mVp-p
240mVp-p

IC500 F71022Z DDS
IC501 F71022Z DDS
D500,501 SWITCHING
DELAY
CHOP

Q514 BUFFER AMPLIFIER
Q523 BUFFER AMPLIFIER
Q522 BUFFER AMPLIFIER
IC506 NJM2594V MIXER

Q517 2SC2714(Y) CRYSTAL OSC
Q518 BUFFER AMPLIFIER
Q519 2SC2714(Y)
Q519 BUFFER AMPLIFIER
Q524 2SC2714(Y) AMPLIFIER
CF500
TP503
CN503 TX-RX-CN9 CAR GND
-1.2dBm 10.695MHz

RIN 5A
CLK

TP506 62.35MHz
CN502 TX-RX-CN3
+2.5dBm 62.35MHz
LO2

Q525 2SC2714(Y)
Q525 CRYSTAL OSC
Q526 2SC2714(Y)
Q526-528 BUFFER AMPLIFIER
Q527 2SC2996(Y)
Q528 2SC2996(Y)
Q529 2SC2712(Y) AMPLIFIER
Q520 2SC2714(Y)
Q520 BUFFER AMPLIFIER
Q521 2SC2714(Y) AMPLIFIER
X501 20MHz
X502 62.35MHz
OPTION SO-2

Q900 VOX AMPLIFIER
Q900 2SC2712(Y)
Q902 DTA114EK
Q903 DTC114EK
Q903 VOX INPUT ON/OFF
GAIN
ANTI
D900-902 REVERSE-FLOW PREVENTION
AMPLIFIER
IC900 NJM2904M
IC901 TC4001BFT NOR CIRCUIT
VOX ON/OFF
VOX ON : 0.1V OFF : 0V
VOX ON : 0.6V OFF : 4.4V
VOX ON : 0.66V OFF : 0V
VOX ON : 8.0V OFF : 0.5V
VOX ON : 0V OFF : 8.0V
VOX ON : 0.64V OFF : 0V
VOX ON : 7.9V OFF : 0.1V
TO TX-RX UNIT 5A 8F MIC SP VOXO VOXS

BLOCK DIAGRAM

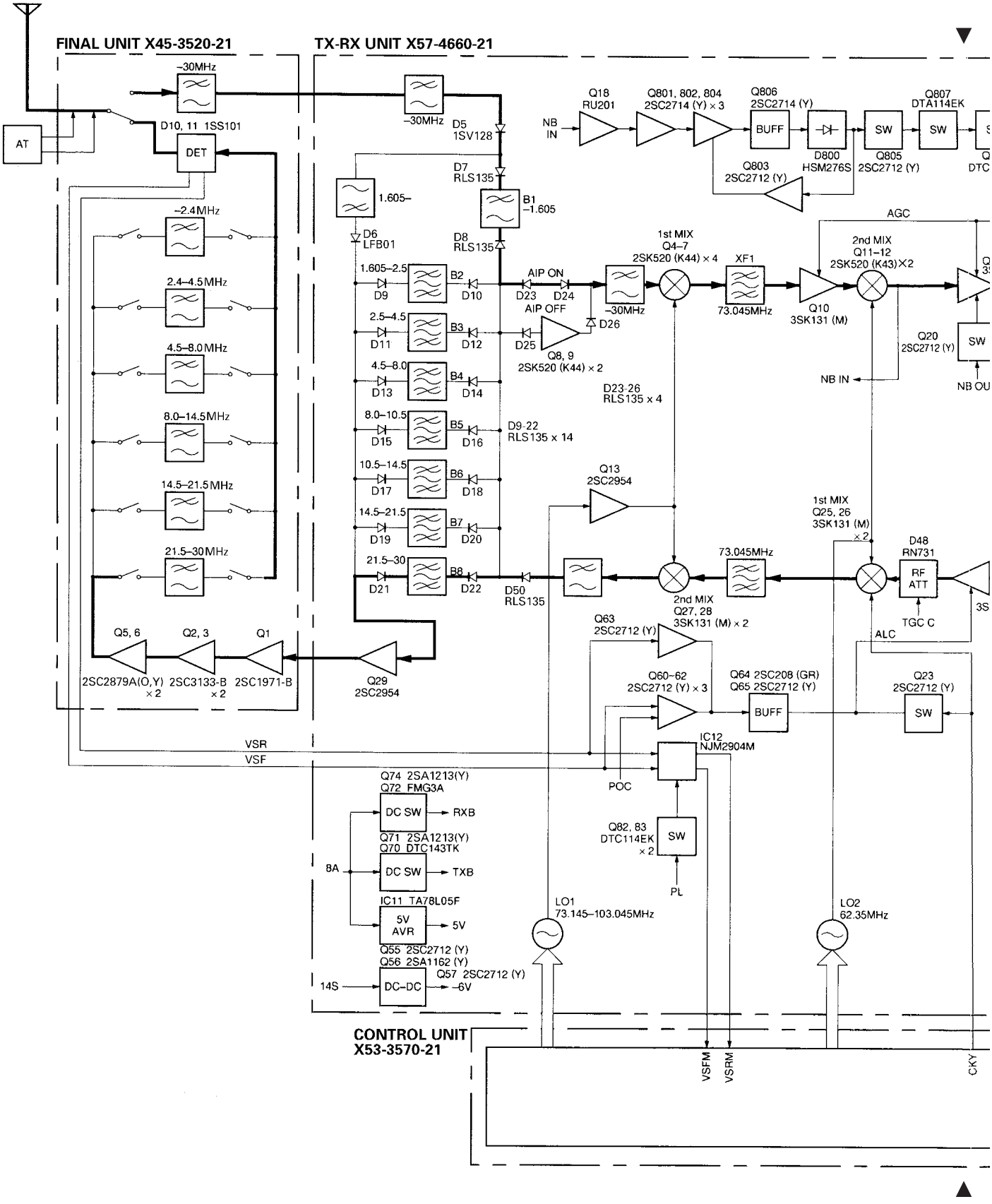

BLOCK DIAGRAM

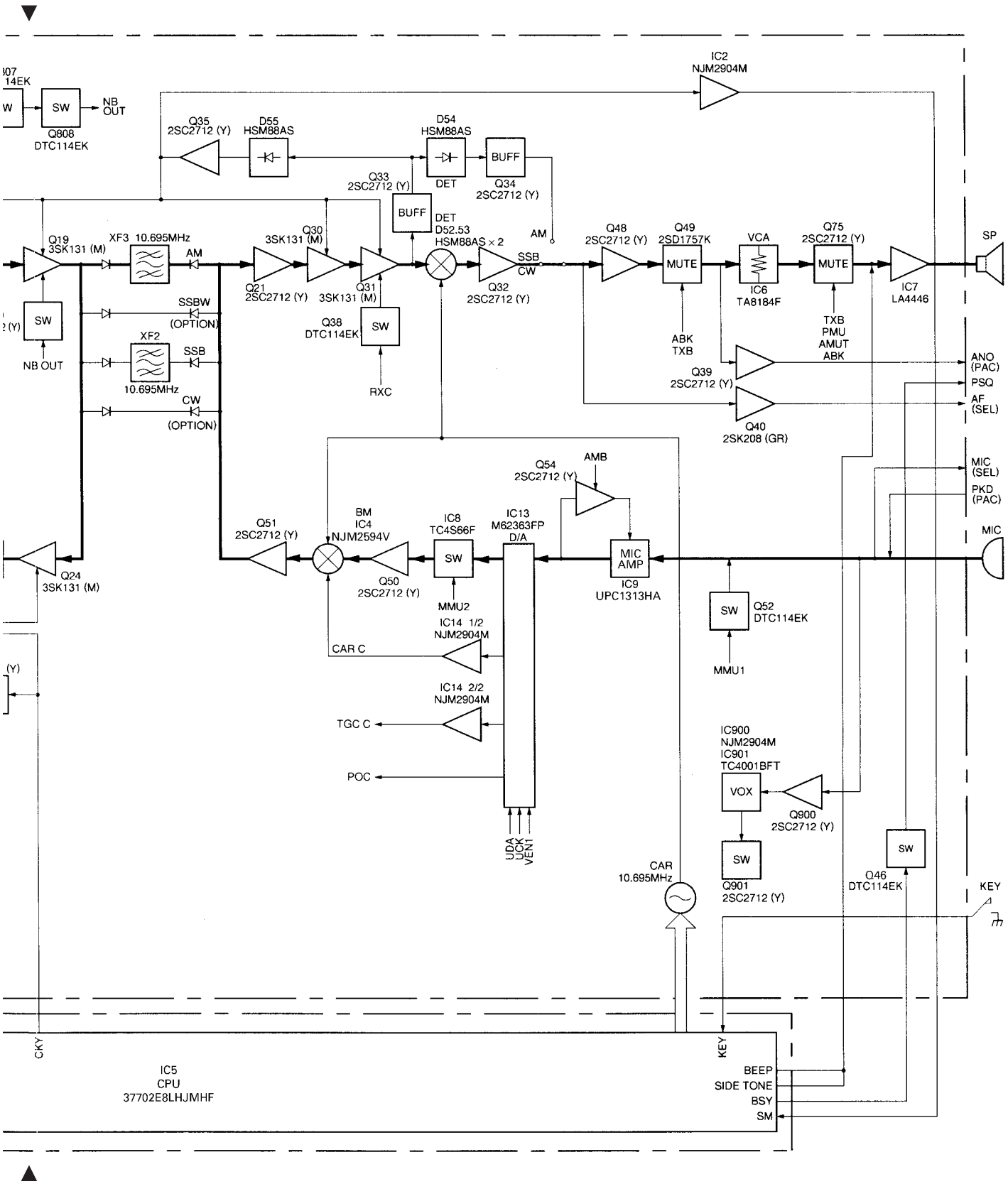

FINAL UNIT X45-3520-21

TX-RX UNIT X57-4660-21

AT

D10, 11 1SS101

DET

–30MHz

–2.4MHz

2.4–4.5MHz

4.5–8.0MHz

8.0–14.5MHz

14.5–21.5MHz

21.5–30MHz

Q5, 6 2SC2879A(O,Y) ×2

Q2, 3 2SC3133-B ×2

Q1 2SC1971-B

Q29 2SC2954

D5 1SV128

D7 RLS135

D8 RLS135

1.605–

B1 –1.605

D6 LFB01

1.605–2.5 B2 D9 D10

2.5–4.5 B3 D11 D12

4.5–8.0 B4 D13 D14

8.0–10.5 B5 D15 D16

10.5–14.5 B6 D17 D18

14.5–21.5 B7 D19 D20

21.5–30 B8 D21 D22

D9-22 RLS135 x 14

D50 RLS135

D23-26 RLS135 x 4

AIP ON D23 D24

AIP OFF D25 D26

Q8, 9 2SK520 (K44) ×2

NB IN

Q18 RU201

Q801, 802, 804 2SC2714 (Y) ×3

Q806 2SC2714 (Y)

BUFF

D800 HSM276S

Q805 2SC2712 (Y)

SW

Q807 DTA114EK

Q808 DTC114EK

NB OUT

Q803 2SC2712 (Y)

AGC

1st MIX Q4–7 2SK520 (K44) ×4

XF1 73.045MHz

2nd MIX Q11–12 2SK520 (K43)×2

Q10 3SK131 (M)

Q19 3SK131 (M)

XF3 10.695MHz

AM

SSBW (OPTION)

XF2 10.695MHz

SSB

CW (OPTION)

Q20 2SC2712 (Y)

NB IN

NB OUT

Q13 2SC2954

1st MIX Q25, 26 3SK131 (M) ×2

73.045MHz

2nd MIX Q27, 28 3SK131 (M) ×2

D48 RN731

RF ATT

TGC C

ALC

Q24 3SK131 (M)

Q63 2SC2712 (Y)

Q60–62 2SC2712 (Y) ×3

Q64 2SC208 (GR)

Q65 2SC2712 (Y)

BUFF

Q23 2SC2712 (Y)

SW

IC12 NJM2904M

POC

VSR

VSF

Q74 2SA1213(Y)

Q72 FMG3A

DC SW → RXB

Q71 2SA1213(Y)

Q70 DTC143TK

8A

DC SW → TXB

IC11 TA78L05F

5V AVR → 5V

Q55 2SC2712 (Y)

Q56 2SA1162 (Y)

14S

DC–DC

Q57 2SC2712 (Y) → –6V

Q82, 83 DTC114EK ×2

SW

PL

LO1 73.145–103.045MHz

LO2 62.35MHz

Q35 2SC2712 (Y)

D55 HSM88AS

D54 HSM88AS

DET

BUFF

Q34 2SC2712 (Y)

Q33 2SC2712 (Y)

BUFF

DET D52.53 HSM88AS ×2

AM

SSB CW

Q32 2SC2712 (Y)

Q21 2SC2712 (Y)

Q30 3SK131 (M)

Q31 3SK131 (M)

Q38 DTC114EK

SW

RXC

IC2 NJM2904M

Q48 2SC2712 (Y)

Q49 2SD1757K

MUTE

ABK TXB

VCA

IC6 TA8184F

Q75 2SC2712 (Y)

MUTE

TXB PMU AMUT ABK

IC7 LA4446

SP

Q39 2SC2712 (Y)

Q40 2SK208 (GR)

ANO (PAC)

PSQ

AF (SEL)

MIC (SEL)

PKD (PAC)

MIC

Q54 2SC2712 (Y)

AMB

Q51 2SC2712 (Y)

BM IC4 NJM2594V

Q50 2SC2712 (Y)

IC8 TC4S66F

SW

MMU2

IC13 M62363FP D/A

MIC AMP

IC9 UPC1313HA

IC14 1/2 NJM2904M

CAR C

IC14 2/2 NJM2904M

TGC C

POC

UDA

UCK

VEN1

SW

Q52 DTC114EK

MMU1

IC900 NJM2904M

IC901 TC4001BFT

VOX

Q900 2SC2712 (Y)

SW

Q901 2SC2712 (Y)

CAR 10.695MHz

SW

Q46 DTC114EK

KEY

CONTROL UNIT X53-3570-21

VSFM

VSRM

CKY

KEY

IC5 CPU 37702E8LHJMHF

BEEP

SIDE TONE

BSY

SM

KAT-2 (Internal Automatic Antenna Tuner)

External View

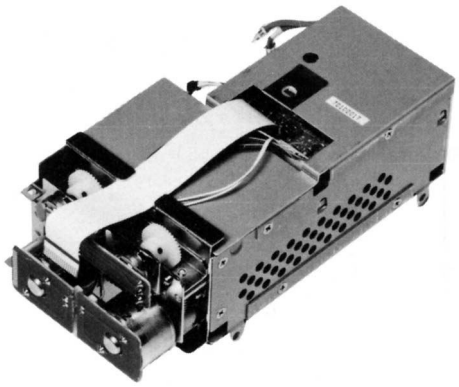

Circuit Description

1. Auto antenna tuner

When the AT TUNE switch is pressed, ATA goes high. AUTO/THRU switching relay K1 closes, and the AT is inserted. The CW mode is entered, and the transmission output becomes about 10W. If the VSWR is less than 1.1, tuning is regarded as complete, and the AT TUNE operation stops. If the VSWR is greater than 1.1, the duty cycle of the motor control pulse (described later) is controlled according to the VSWR. If tuning is not complete after more than 20 seconds, AT TUNE operation stops at below VSWR 1.3.

The motor speed is determined by the microprocessor, and the direction is determined by the phase comparator IC1 and amplitude comparator IC6 if the APRE is low, and by the microprocessor if the APRE is high (Fig. 1).

2. Auto tuning

The transmitter power from the final unit passes through current/voltage detection transformers L1 and L2, which have toroidal cores. The current and voltage components detected here are rectified by a waveform rectification circuit consisting of D3 to D5, Q1, D6 to D8, and Q2, and are then phase-compared by IC1. The output signals (Q and $\overline{Q}$) from pins 5 and 6 of IC1 passes from IC2 through the switch, and are applied to the motor drive IC, IC4. Variable capacitor VC101 is turned by motor M1 so that the phase difference of the voltage and current components decreases.

The voltage and current components detected by L1 and L2 are rectified by diode's D1 and D2, and are applied to voltage comparison circuit IC6 as the amplitude component of the signal. The comparator output passes from IC3 through the switch. Motor M2 is driven by another motor drive IC, IC5, which turns variable capacitor VC102 in the direction that decreases the amplitude difference of the voltage and current components.

Thus, variable capacitor VC101 adjusts the capacitance of the circuit so that the current and voltage phases match, and variable capacitor VC102 adjusts the resistance of the circuit so that the current and voltage amplitude difference decreases. If the phases match and the amplitude difference is zero, the VSWR is 1.0.

The speed of motors M1 and M2 is determined by the duty cycle of the pulse input to pin 8 of IC4 and IC5. It is controlled according to the VSWR calculated by the CPU in the control unit and the speed corresponding to preset or manual antenna tuning.

Pulse signal SPED from the control unit passes through Q5, and is amplified by Q4 to produce a control pulse input to IC4 and IC5.

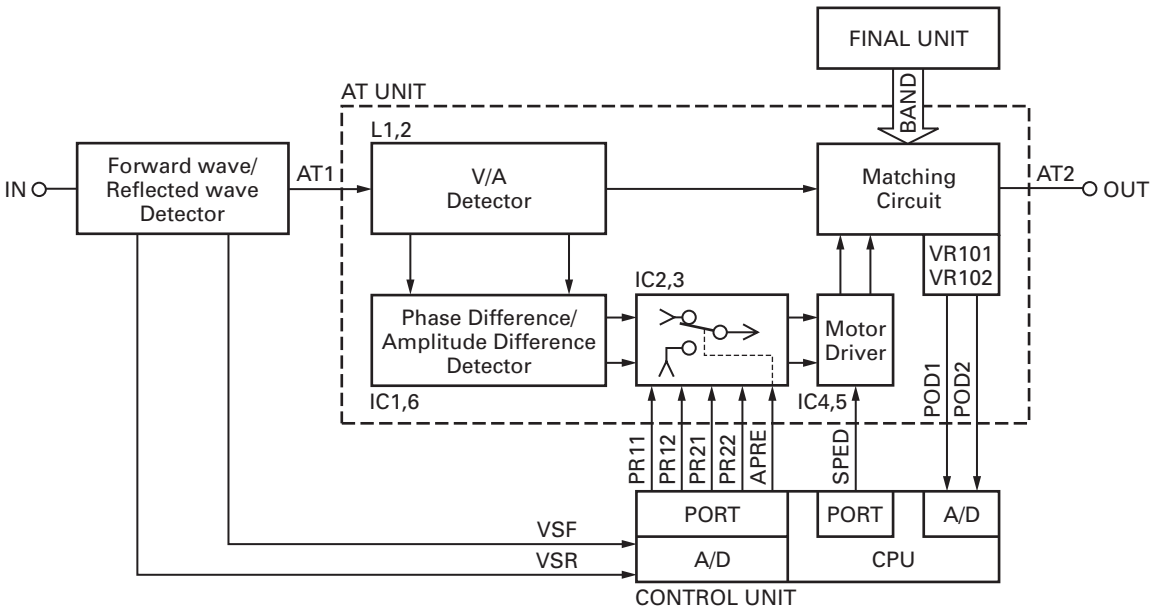

Fig. 1 Auto antenna tuner block diagram

KAT-2 (Internal Automatic Antenna Tuner)

When this control, when the VSWR is 1.6 or more, the motor runs fast since the duty cycle of the motor drive voltage pulse is 100%. When the VSWR is 1.1, the duty cycle becomes about 60% and the motor runs slowly.

The matching circuit is a T type. The tap position from 2.0 to 30MHz is controlled by seven relays, K101 to K107.

Position detection potentiometers VR101 and VR102 are linked to the spindles of variable capacitors VC101 and VC102 with a gear ratio of 1:1. Voltages of 0 to 5V (POD1 and POD2) are produced according to the positions of the variable capacitors. This position data is input to the CPU through the A/D converter by the control unit, and is used as the reference voltage in the feedback control system. That is used for preset antenna tuning. The same signal is also used for preset data and to signal the completion of antenna tuning.

The potentiometers used here are not ones that rotate through 360 degrees. Since the TK-80 limits the rotation angle of each potentiometer, the rotation range is from the minimum capacitance to the maximum capacitance, plus a little extra for headroom.

Through this control, like preset antenna tuning, which will be described later, POD1 and POD2 are monitored by the microprocessor. If the lower limit voltage of 1.0V or the upper limit voltage of 4.0V is reached, the microprocessor recognizes that a variable capacitor is close to one of its limits. To return the voltage to the opposite side, APRE is switched high. For VC101, if the voltage is close to the lower limit with respect to PRE1, the voltage near the upper limit is output. If the voltage is close to the upper limit with respect to PRE1, the voltage near the lower limit is output.

The other variable capacitor, VC102, should be fixed. If the variable capacitor voltage exceeds the specified limit, the variable capacitor is returned to the opposite limit. The other variable capacitor remains in the same position.

The motor direction is determined by the CPU, unless auto antenna tuning is performed with high APRE.

The logic of PR11 to PR22 is the same as that of IC4 and IC5. The signal output from the control unit passes through IC2 and IC3 and is input to IC4 and IC5.

		PR11	PR12	PR21	PR22
Motor 1	Forward rotation	H	L	-	-
	Reverse rotation	L	H	-	-
Motor 2	Forward rotation	-	-	H	L
	Reverse rotation	-	-	L	H

3. Preset tuning

When auto antenna tuning ends, the position of the variable capacitors is stored in memory by the microprocessor as preset data for each channel.

When a memory channel that has been tuned once changed back from another memory channel, APRE goes high, the motors are controlled by the microprocessor, and preset antenna tuning takes place. During preset antenna tuning, transmission is inhibited even if the transceiver is ready to transmit.

The initial preset data when writes a memory by dealer includes standard data for 50Ω load on 1MHz step from 2.0 MHz.

Components Description

AT UNIT (X53-3630-20)

Ref. No.	Use / Function	Operation / Condition
IC1	D-FF	
IC2	Analog switch	For control changeover motor 1
IC3	Analog switch	For control changeover motor 2
IC4	Motor driver	For motor 1
IC5	Motor drive	For motor 2
IC6	Comparator	Amplification difference detection
Q1,2	Amplifier	Waveform shaping
Q3	Switching	ON when APRE "H"
Q4,5	Switching	Motor speed control pulse
Q6	Switching	K1 relay changeover
D1,2	Detection	Current component ampification detection
D3~8	Switching	Clipper
D9	Switching	Spike absorption
D101~107	Switching	Spike absorption

KAT-2 (Internal Automatic Antenna Tuner)

Parts List

✻ New Parts.

Ref. No.	Address	New parts	Parts No.	Description	Destination
KAT-2					
1	1C	✻	B62-0530-10	INSTRUCTION MANUAL	
A	1D		N87-3006-46	BRAZIER HEAD TAPTITE SCREW	
-			490-0093-05	ADHESIVE TAPE	
AT UNIT (X53-3630-20)					
C1			CM93D2H560J	MICA 56PF J	
C2-8			CK73FB1H103K	CHIP C 0.010UF K	
C9,10			CK73FB1H102K	CHIP C 1000PF K	
C11			CK73FB1H103K	CHIP C 0.010UF K	
C12			CE04EW1A470M	ELECTRO 47UF 10WV	
C13-19			CK73FB1H103K	CHIP C 0.010UF K	
C20			CE04EW1E101M	ELECTRO 100UF 25WV	
C21-35			CK73FB1H103K	CHIP C 0.010UF K	
C101-107			CK73FB1H103K	CHIP C 0.010UF K	
TC1			C05-0031-15	CERAMIC TRIMMER CAPACITOR (10PF)	
VC101,102			C02-0025-05	VARIABLE CAPACITOR	
A5	3A	✻	D40-0638-15	GEAR ASSY	
101	1B		E37-0558-05	FLAT CABLE	
CN1,2			E04-0191-05	PIN SOCKET	
CN3			E40-5349-05	FLAT CABLE CONNECTOR	
CN4			E40-3243-05	PIN ASSY	
W1	1B		E37-0562-05	LEAD WIRE WITH MINIPIN PLUG	
W2	1B		E37-0563-05	LEAD WIRE WITH MINIPIN PLUG	
W101	1B,3B		E31-6038-05	LEAD WIRE WITH MINIPIN PLUG	
W102	1B,3B		E31-6083-05	LEAD WIRE WITH MINIPIN PLUG	
W103-W106	3A,2B		E33-1983-05	PROCESSED WIRE KIT	
A1	2B	✻	F10-2184-12	SHIELDING PLATE	
A2	1B	✻	F10-1499-14	SHIELDING PLATE	
A3	3B	✻	F10-1500-13	SHIELDING PLATE	
A4	1B	✻	F10-2001-13	SHIELDING PLATE	
102	1A		G02-0717-04	FLAT SPRING	
-			J61-0307-05	BAND	
L1			L39-0496-05	TOROIDAL COIL	
L2			L39-0415-25	TOROIDAL COIL	
L3-8			L40-1011-13	SMALL FIXED INDUCTOR (100UH)	
L9-11			L40-1011-17	SMALL FIXED INDUCTOR (100UH)	
L12-15			L40-1011-14	SMALL FIXED INDUCTOR (100UH)	
L101			L34-4425-05	AIR-CORE COIL	
L102			L39-1265-05	TOROIDAL COIL	
L103			L39-1262-05	TOROIDAL COIL	
L104			L39-1263-05	TOROIDAL COIL	
L105			L39-1264-05	TOROIDAL COIL	
L106			L39-1268-05	TOROIDAL COIL	
L107			L40-1011-14	SMALL FIXED INDUCTOR (100UH)	
L108			L40-1011-15	SMALL FIXED INDUCTOR (100UH)	
L109-113			L40-1011-14	SMALL FIXED INDUCTOR (100UH)	
B	1B,3B		N87-3006-46	BRAZIER HEAD TAPTITE SCREW	
C	1A,3B		N88-3006-46	FLAT HEAD TAPTITE SCREW	
R1,2			RD14CB2E101J	RD 100 J 1/4W	

Ref. No.	Address	New parts	Parts No.	Description	Destination
R3			RK73FB2A102J	CHIP R 1.0K J 1/10W	
R4			RD14CB2E470J	RD 47 J 1/4W	
R5,6			RK73FB2A181J	CHIP R 180 J 1/10W	
R7-10			RK73FB2A103J	CHIP R 10K J 1/10W	
R11			RK73FB2A563J	CHIP R 56K J 1/10W	
R12			RK73FB2A121J	CHIP R 120 J 1/10W	
R13			RK73FB2A101J	CHIP R 100 J 1/10W	
R14			RK73FB2A563J	CHIP R 56K J 1/10W	
R15			RK73FB2A121J	CHIP R 120 J 1/10W	
R16			RK73FB2A101J	CHIP R 100 J 1/10W	
R17			RK73FB2A330J	CHIP R 33 J 1/10W	
R18			RK73FB2A103J	CHIP R 10K J 1/10W	
R19			RK73FB2A330J	CHIP R 33 J 1/10W	
R20-23			RK73FB2A103J	CHIP R 10K J 1/10W	
R24,25			RD14BB2E100J	RD 10 J 1/4W	
R26			RK73FB2A472J	CHIP R 4.7K J 1/10W	
R27-32			RK73FB2A103J	CHIP R 10K J 1/10W	
R33			RK73FB2A472J	CHIP R 4.7K J 1/10W	
R34-42			R92-0670-05	CHIP R 0 OHM	
VR101,102			R01-3435-05	POTENTIOMETER (10K)	
K1			S51-2417-05	RELAY	
K101-104			S76-0415-05	RELAY	
K105-107			S76-0401-05	RELAY	
M1,2			T42-0453-05	MOTOR	
D1,2			1SS101	DIODE	
D3-8			1SS226	DIODE	
D9			LFB01	DIODE	
D101-107			LFB01	DIODE	
IC1			SN74S74NS	MOS-IC	
IC2,3			TC4066BF	MOS-IC	
IC4,5			BA6109U2	MOS-IC	
IC6			NJM2903M	MOS-IC	
Q1,2			2SC2714(Y)	TRANSISTOR	
Q3			DTC114EKA	DIGITAL TRANSISTOR	
Q4			2SA1204(Y)	TRANSISTOR	
Q5			DTC114EKA	DIGITAL TRANSISTOR	
Q6			DTD143EK	DIGITAL TRANSISTOR	
W5-19			001-0002-05	COATING WIRE	

KAT-2 (Internal Automatic Antenna Tuner)

Exploded View

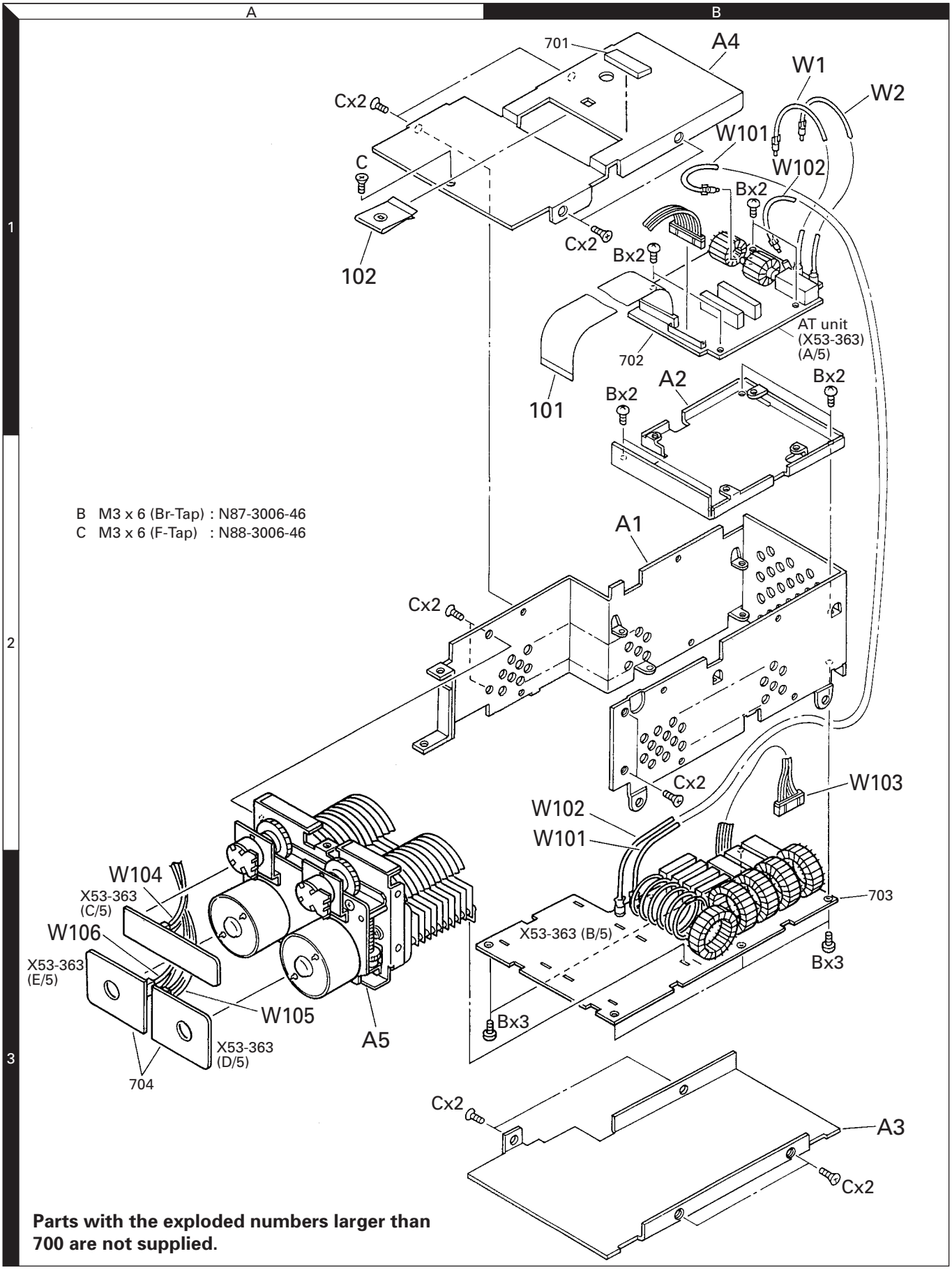

Parts with the exploded numbers larger than 700 are not supplied.

KAT-2 (Internal Automatic Antenna Tuner)

Packing

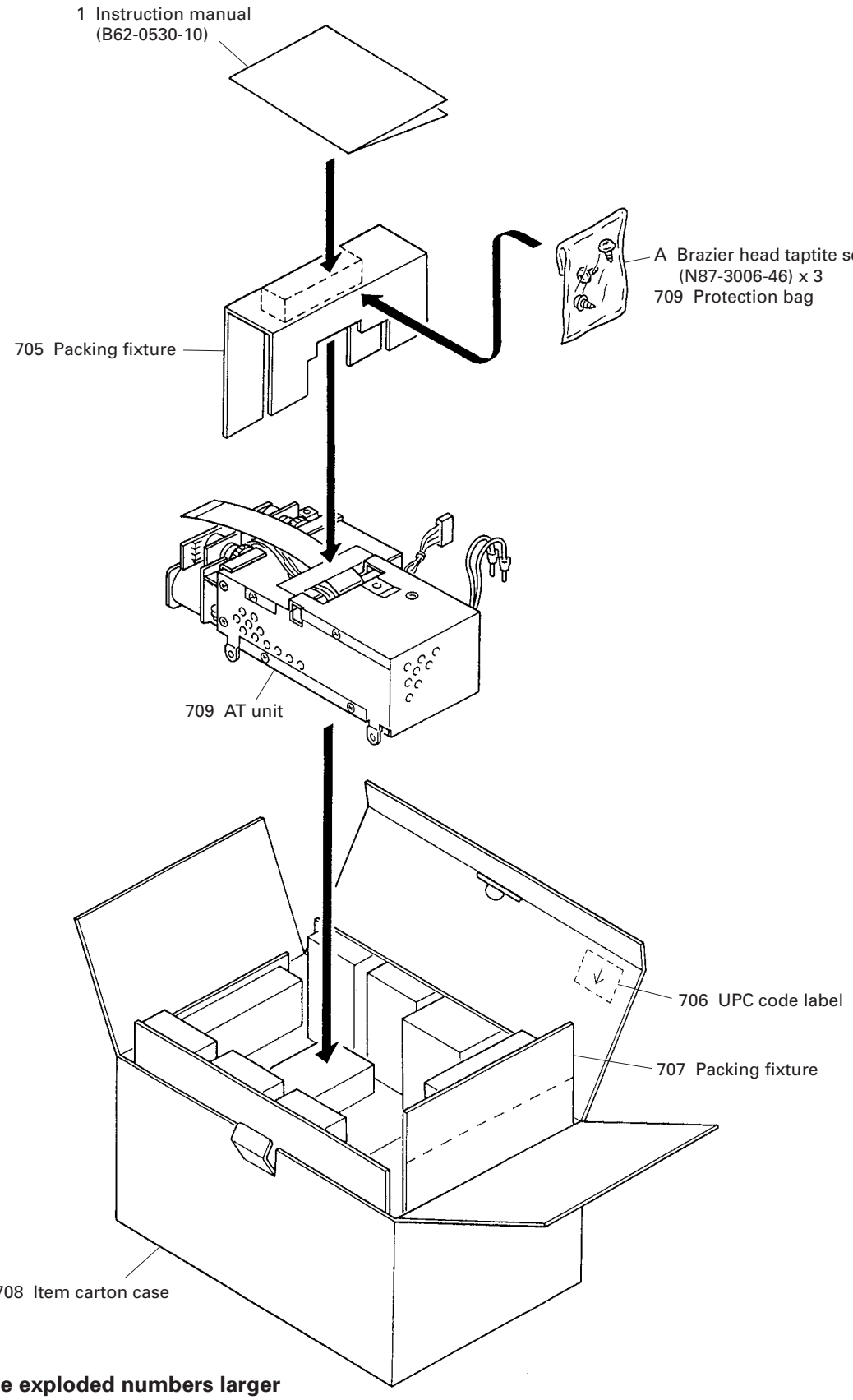

Parts with the exploded numbers larger than 700 are not supplied.

KAT-2 (Internal Automatic Antenna Tuner)

Adjustment

Item	Condition	Measurement			Adjustment			Specifications/ Remarks
		Test-equipment	Unit	Terminal	Unit	Parts	Method	
1. Automatic antenna tuner check	1) Display: 2MHz Mode: CW Dummy load: 20Ω Set silver-point of TC1 to 45° Press [AT TUNE] key	Oscilloscope Dummy load			AT	TC1	Check	SW meter decreases, then AT is stop.
	2) Dummy load: 150Ω Press [AT TUNE] key							
	3) Dummy load: 50Ω Press [AT TUNE] key							

Terminal Function

CN No.	Pin No.	Pin Name	Function
CN3	1	POD1	VC101 position detection signal
	2	POD2	VC102 position detection signal
	3	VREF	AT reference voltage (5V)
	4	ATG	AT GND
	5	PR22	Motor rotation direction control 4
	6	PR21	Motor rotation direction control 3
	7	PR12	Motor rotation direction control 2
	8	PR11	Motor rotation direction control 1
	9	ATA	AUTO/THRU switch
	10	APRE	Preset control select
	11	SPED	Motor speed control
	12	ATI	Preset AT install. "L": Install
	13	14S	14V (switched)
	14	5A	5V
	15	DGND	Digital GND
	16	DGND	Digital GND

CN No.	Pin No.	Pin Name	Function
W1	1	AT1	AT signal 1
	2	GND	GND
W2	1	AT2	AT signal 2
	2	GND	GND
W103	1	24AT	AT band bata 22.00000~26.99999MHz
	2	21AT	AT band bata 19.00000~21.99999MHz
	3	18AT	AT band bata 14.50000~18.99999MHz
	4	28AT	AT band bata 27.00000~29.99999MHz
	5	14AT	AT band bata 8.00000~14.49999MHz
	6	4AT	AT band bata 2.40000~4.49999MHz
	7	7AT	AT band bata 4.50000~7.99999MHz
	8	GND	GND

TK-80 KAT-2 (PC BOARD)

AT UNIT (X53-3630-20) Component side view (J72-0402-02)

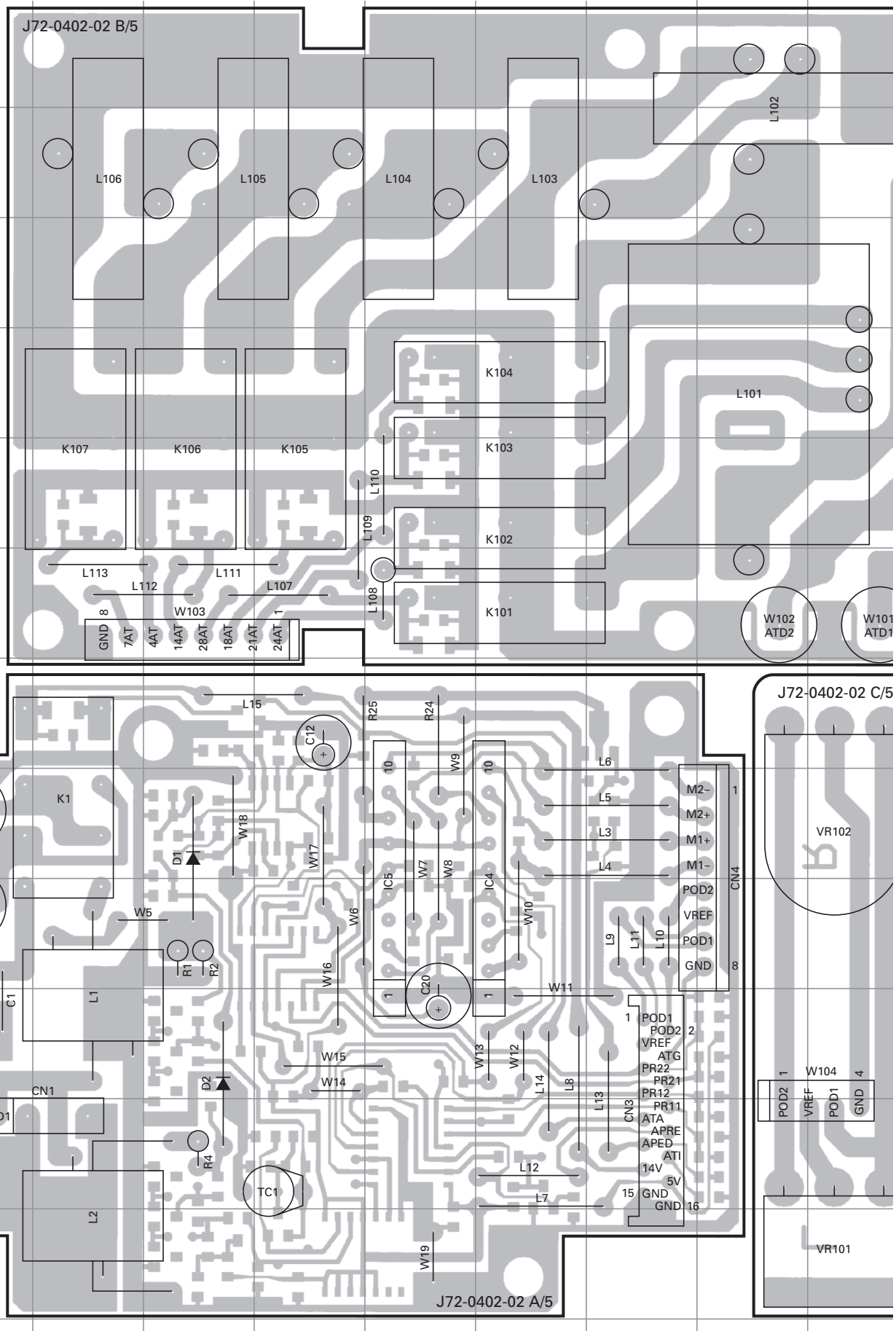

AT UNIT (X53-3630-20) Component side view (J72-0402-02)

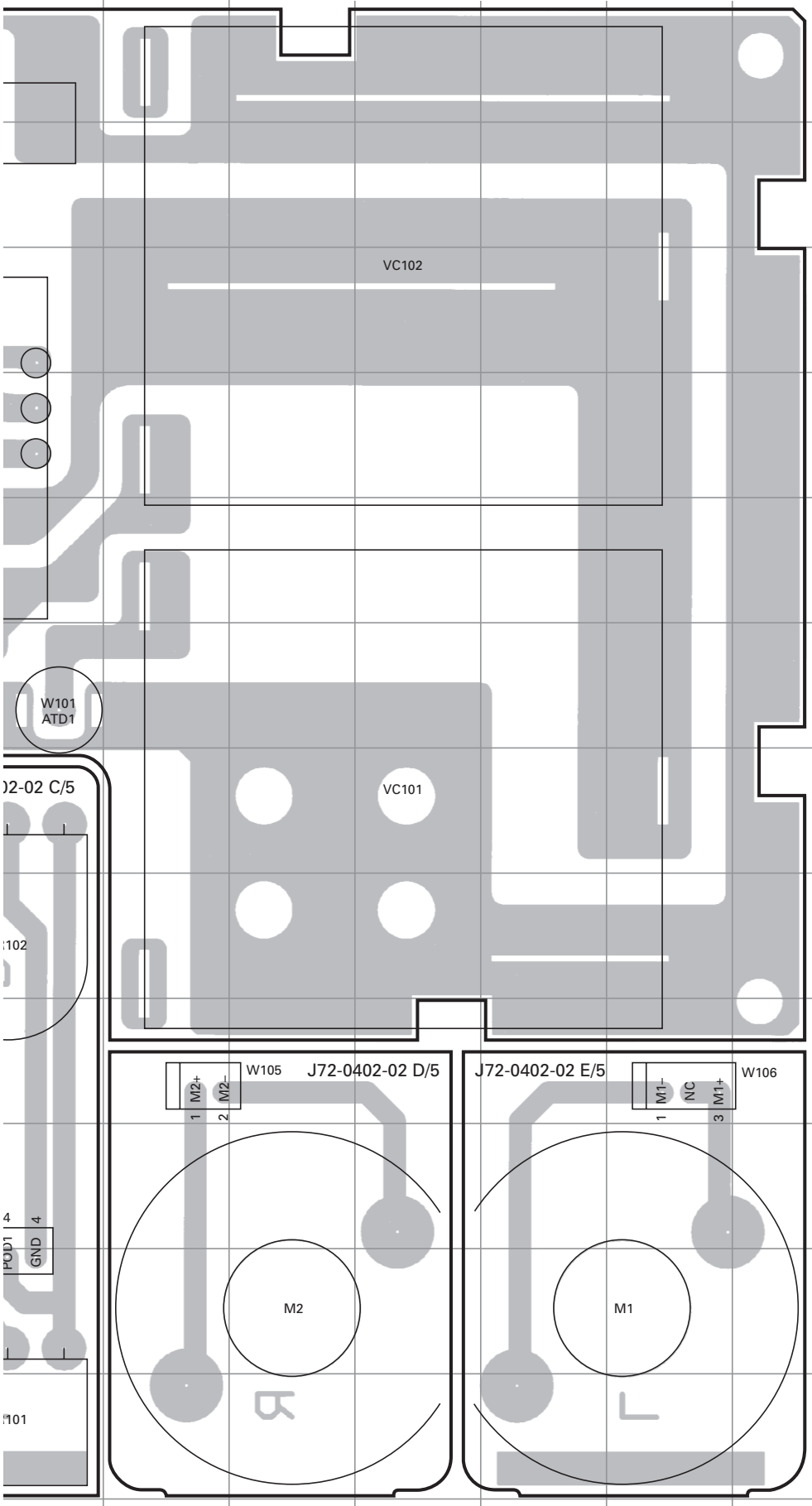

Ref. No.	Address
IC4	10G
IC5	10F
D1	9D
D2	11D

Component side
Layer 1
Layer 2
Foil side

KAT-2 (PC BOARD) TK-80

AT UNIT (X53-3630-20) Component side view (J72-0402-02)

AT UNIT (X53-3630-20) Component side view (J72-0402-02)

Ref. No.	Address
IC4	10G
IC5	10F
D1	9D
D2	11D

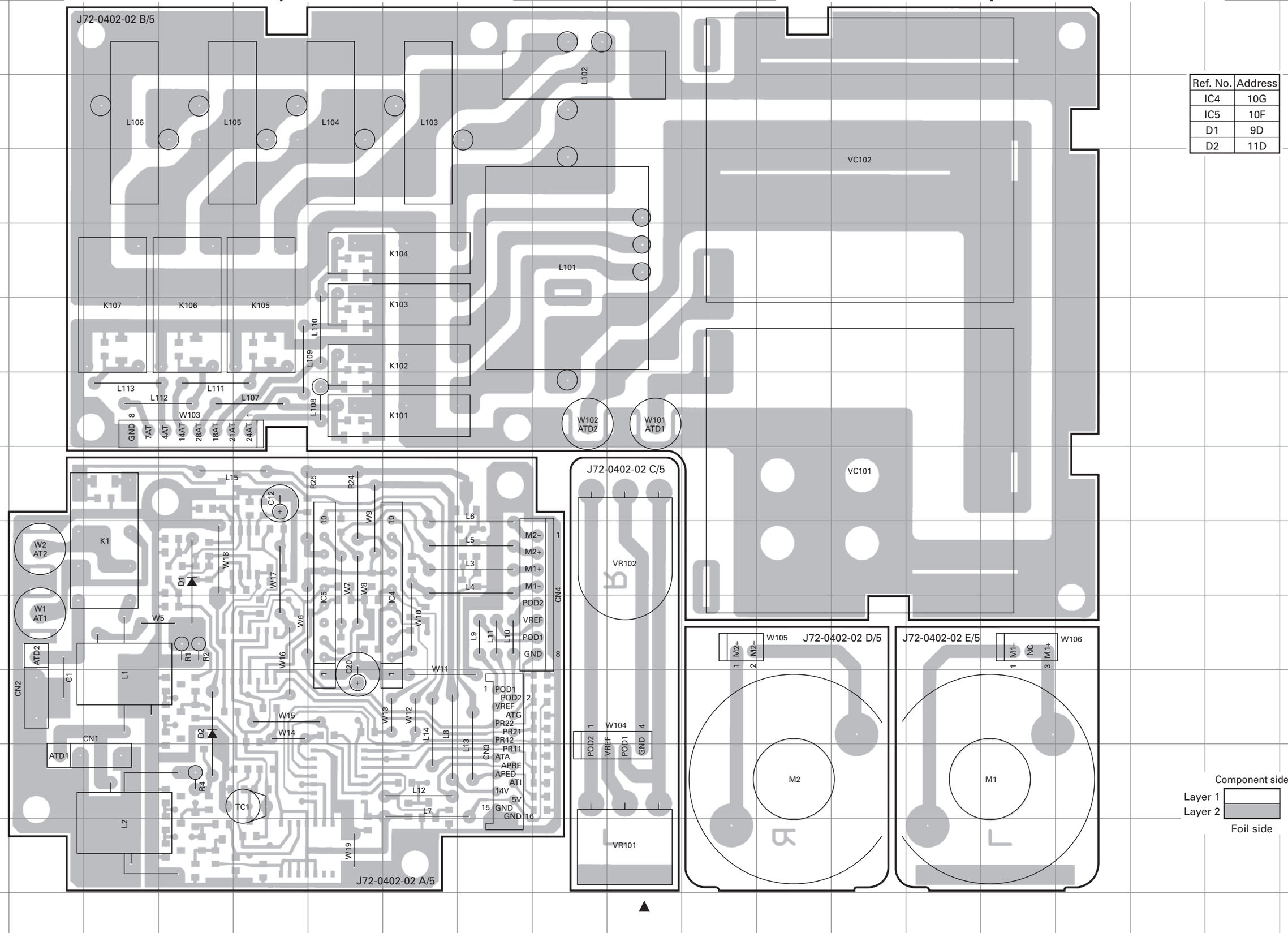

TK-80 KAT-2 (PC BOARD)

AT UNIT (X53-3630-20) Foil side view (J72-0402-02)

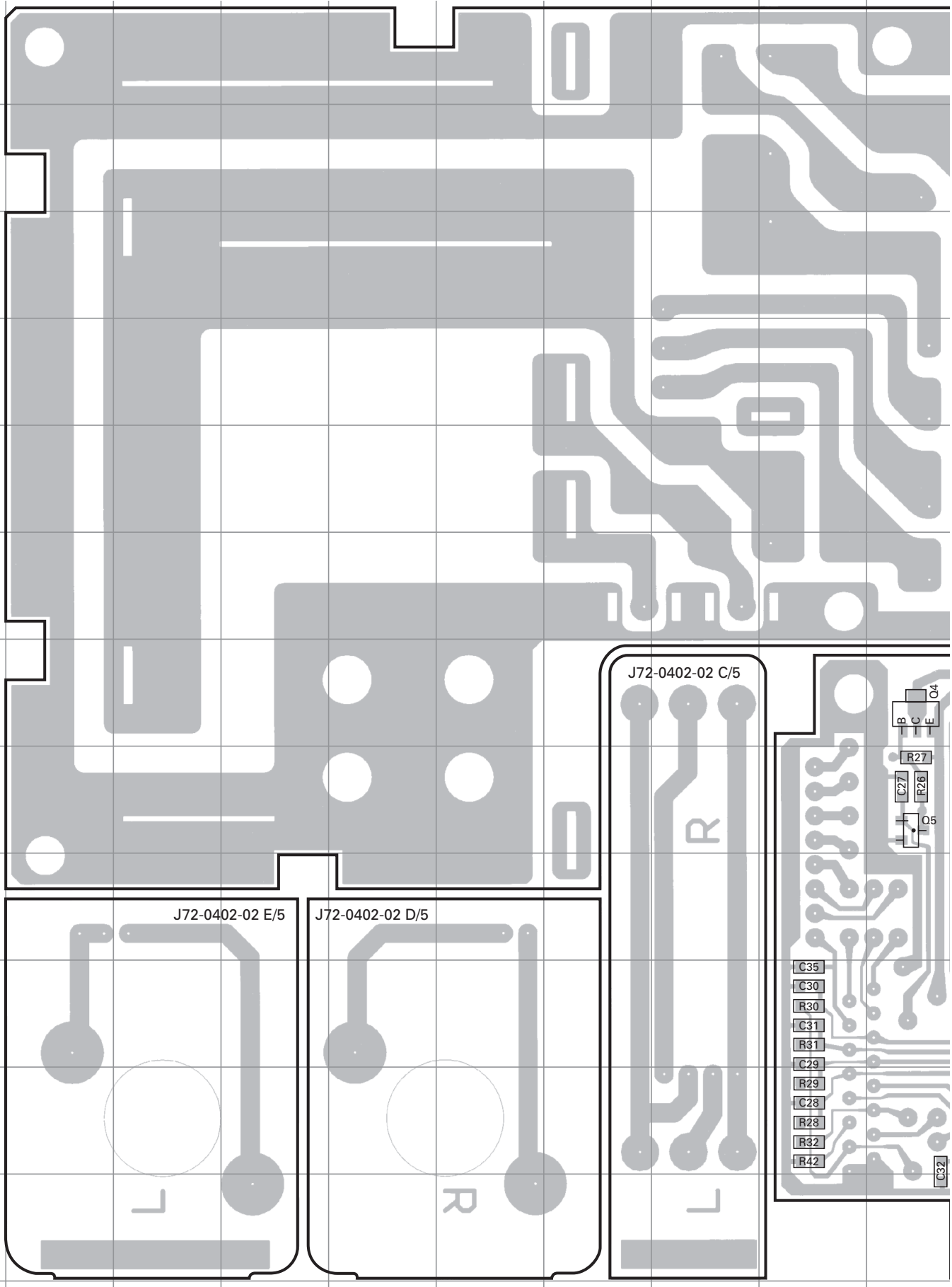

AT UNIT (X53-3630-20) Foil side view (J72-0402-02)

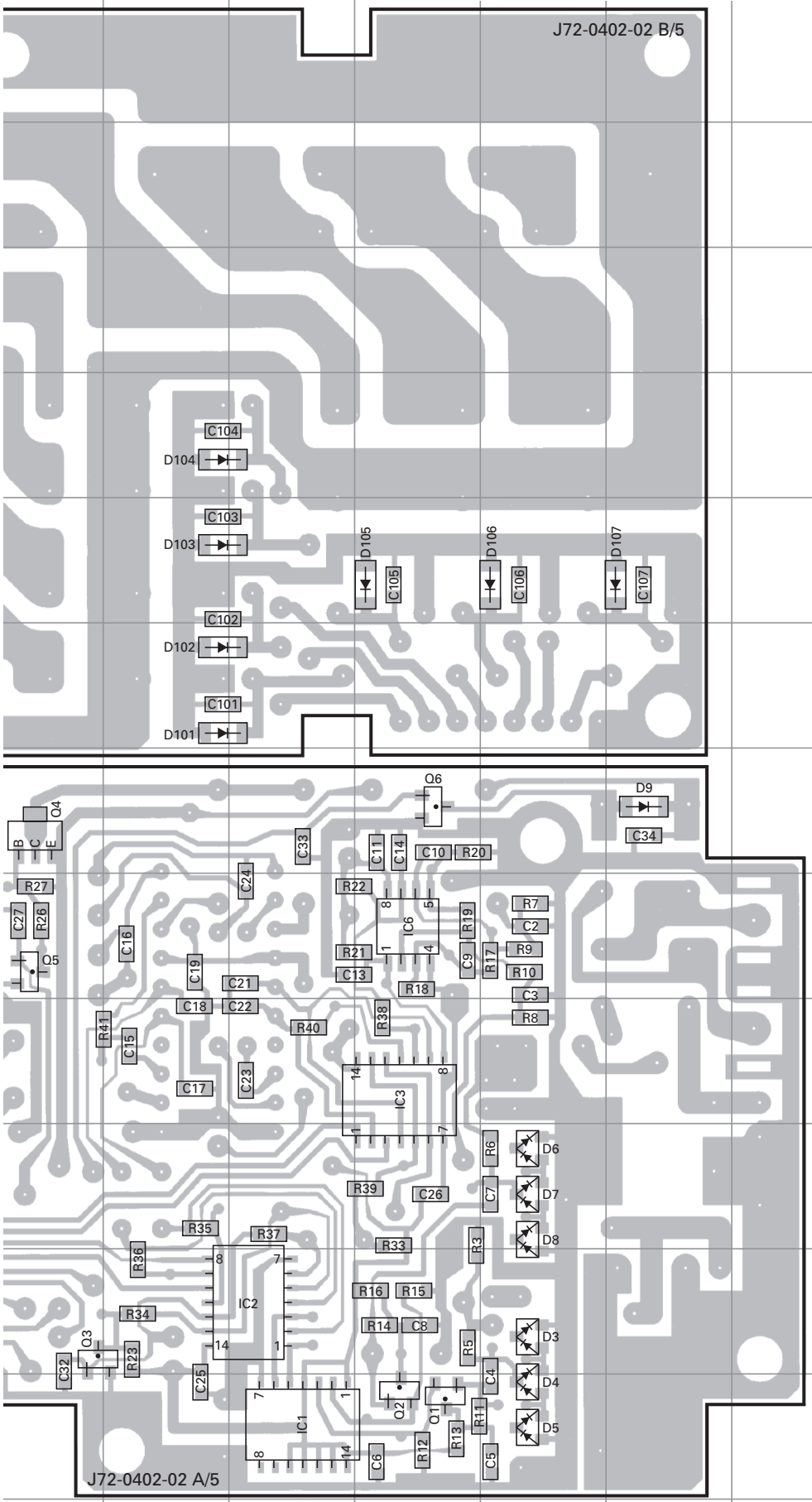

Ref. No.	Address
IC1	13L
IC2	12L
IC3	10M
IC6	9M
Q1	13M
Q2	13M
Q3	12J
Q4	8J
Q5	9J
Q6	8M
D3	12N
D4	13N
D5	13N
D6	11N
D7	11N
D8	11N
D9	8O
D101	7K
D102	7K
D103	6K
D104	5K
D105	6M
D106	6N
D107	6O

Component side
Layer 1
Layer 2
Foil side

TK-80 KAT-2 (PC BOARD)

TK-80 KAT-2 (PC BOARD)

AT UNIT (X53-3630-20) Foil side view (J72-0402-02)

AT UNIT (X53-3630-20) Foil side view (J72-0402-02)

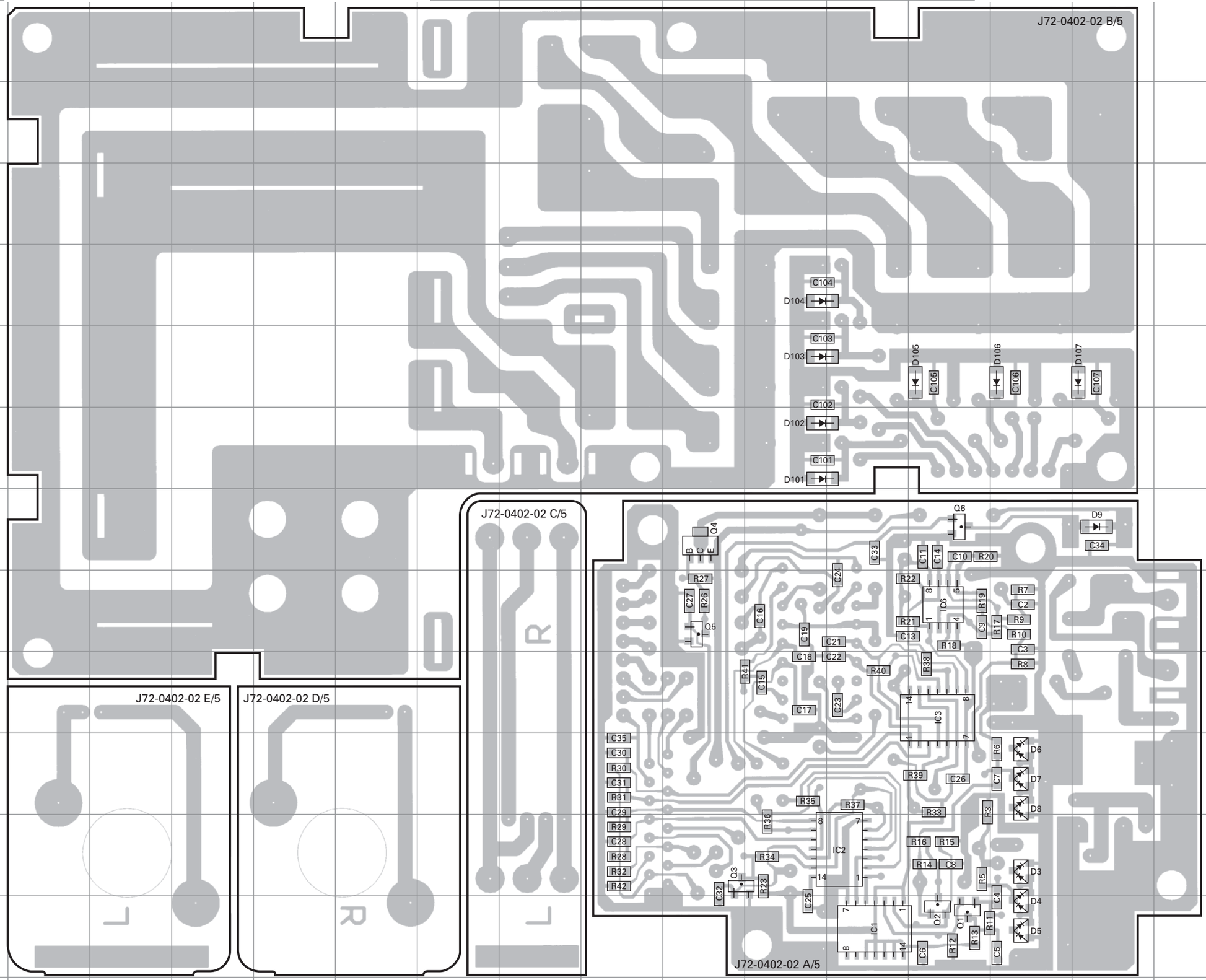

Ref. No.	Address
IC1	13L
IC2	12L
IC3	10M
IC6	9M
Q1	13M
Q2	13M
Q3	12J
Q4	8J
Q5	9J
Q6	8M
D3	12N
D4	13N
D5	13N
D6	11N
D7	11N
D8	11N
D9	8O
D101	7K
D102	7K
D103	6K
D104	5K
D105	6M
D106	6N
D107	6O

Component side
Layer 1
Layer 2
Foil side

TK-80 KAT-2 (SCHEMATIC DIAGRAM)

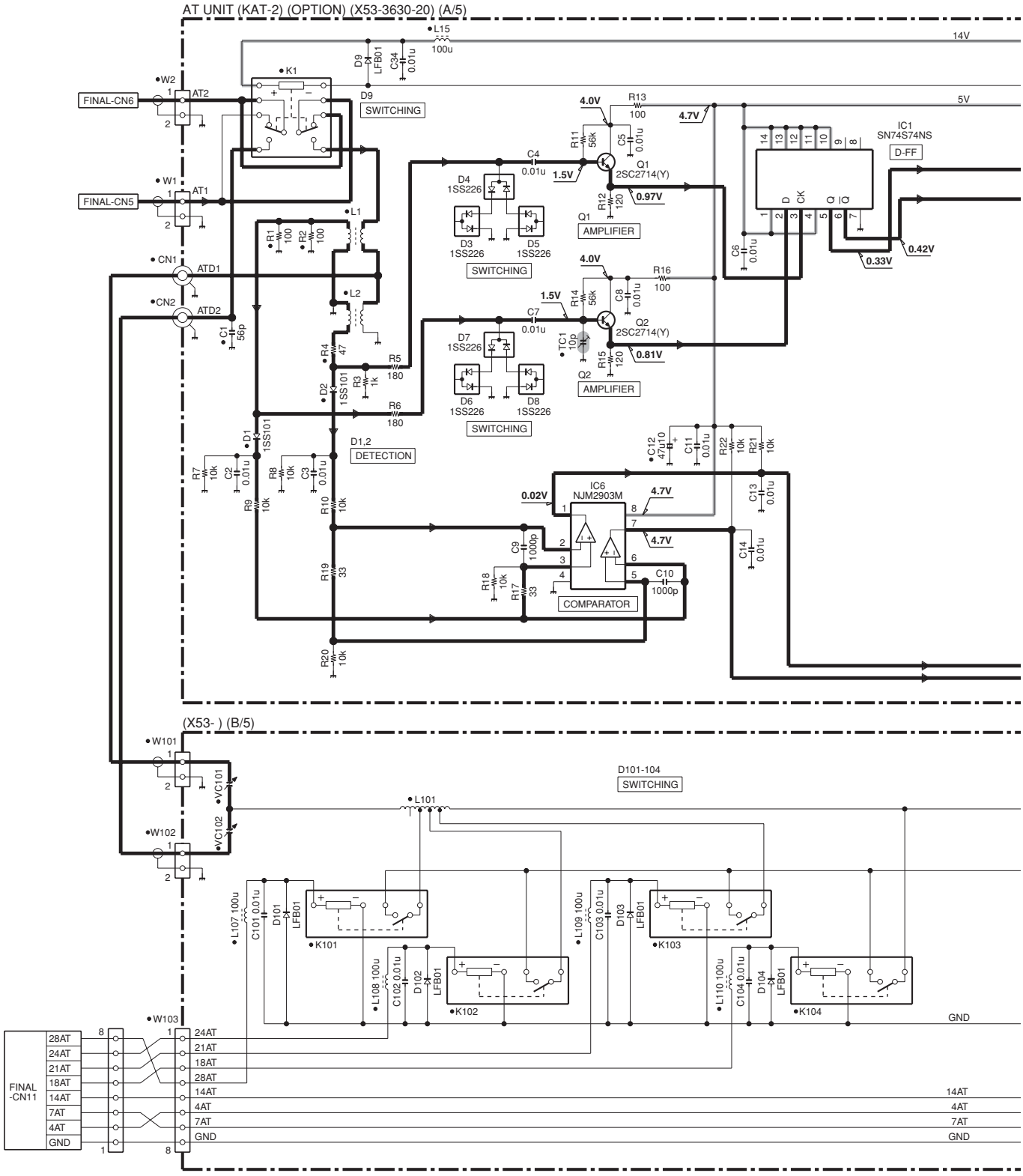

AT UNIT (KAT-2) (OPTION) (X53-3630-20) (A/5)

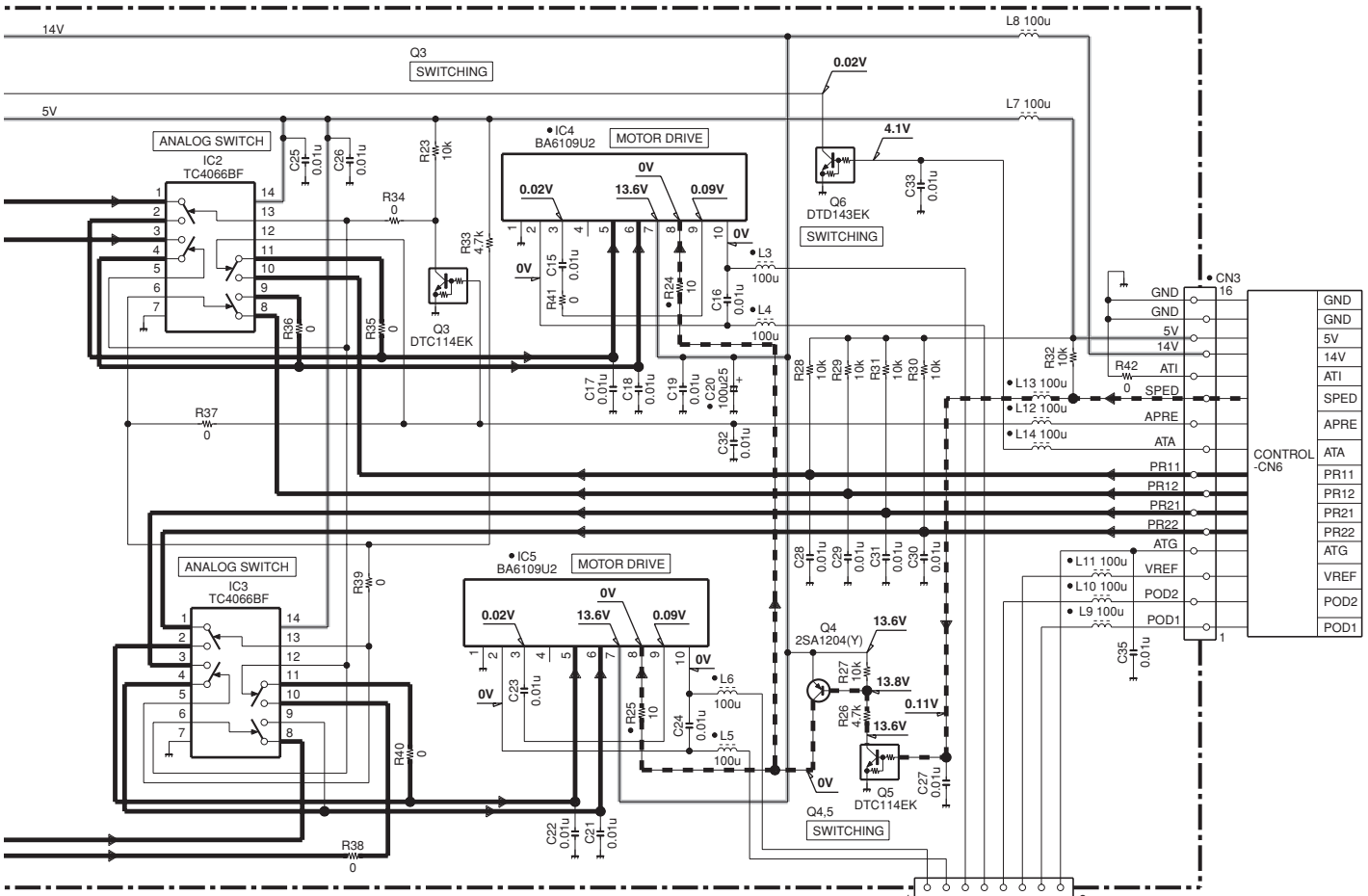

(X53-) (B/5)

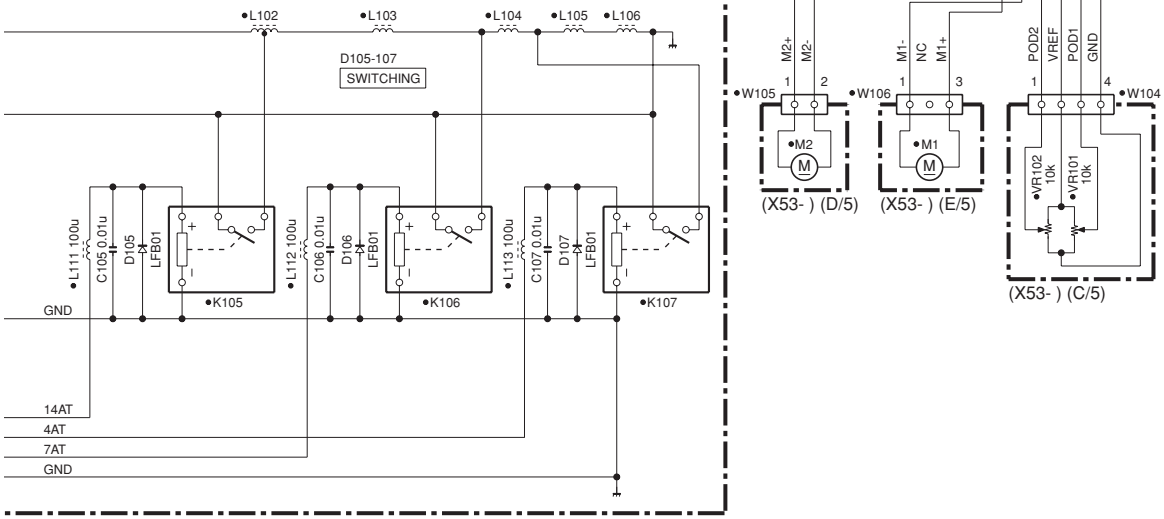

Note : The components marked with a dot (•) are parts of layer 1.

AT UNIT (KAT-2) (OPTION) (X53-3630-20) (A/5)

(X53-) (B/5)

(X53-) (D/5)

(X53-) (E/5)

(X53-) (C/5)

KPE-1 (Selective Call Kit)

External View

Components Description

SELECTIVE CALL UNIT (X52-3300-20)

Ref. No.	Use / Function	Operation / Condition
IC1	FSK demodulator	
IC2	Buffer	
IC3	DTMF decoder	
D4	LED	Lights when "MARK" signal input
D5	LED	Lights when "SPACE" signal input
D6	LED	Lights when "FSK" signal input

Circuit Description

The selective call unit consists of the DTMF decoder section and the FSK decoder section circuits.

1. DTMF decoder

The DTMF tone input from the LCD assembly microphone input connector is input to IC3 via the TX-RX unit. When an effective tone is detected, the STD terminal becomes "H" and an enable TOE is output from the control unit's CPU. This in turn causes DTMF decode data to be output from IC3 and Q1 to Q4. The control unit's CPU reads in this DTMF decode data, converts it to FSK data and transmits.

2. FSK decoder

The AF signal detected at the TX-RX unit is input to pin 2 of IC1. If it is an effective tone, the tone detect signal is output through buffer IC2 and FSL is sent to the control CPU. FSK decode data is sent from pin 7 of IC1 through buffer IC2 as the FSD to the control unit's internal CPU. The CPU detects conformity with code set for that unit and changes the mode clears AF muting, etc.

The IC1 internal VCO central frequency (fo) is determined by C5, R9 and VR1 and adjusted to 2210Hz. The tracking bandwidth (Δf) is determined by R6, R9, and VR1.

Terminal Function

CN No.	Pin No.	Pin Name	Function
CN1	1	AF	Audio
	2	AFG	Audio GND
	3	MIC	MIC signal input
	4	MICG	MIC GND
CN2	1	DGND	Digital GND
	2	TOE	DTMF decoder control
	3	Q1	DTMF decode data
	4	Q2	DTMF decode data
	5	Q3	DTMF decode data
	6	Q4	DTMF decode data
	7	STD	Single tone detector
	8	DGND	Digital GND
	9	5A	5V
	10	FSD	Selective call data
	11	FSL	Selective call signal detector
	12	DGND	Digital GND

Adjustment

Item	Condition	Measurement			Adjustment			Specifications/ Remarks
		Test-equipment	Unit	Terminal	Unit	Parts	Method	
1. Frequency adjustment	1) S1 changes to TEST.	f. counter	Selective call	TP1	Selective call	VR1	2210Hz	±2Hz

KPE-1 (Selective Call Kit)

Parts List

✻ New Parts.

Ref. No.	Address	New parts	Parts No.	Description	Destination
KPE-1					
1		✻	B62-0531-10	INSTRUCTION MANUAL	
2			E37-0502-05	FLAT CABLE	
3			E37-0504-05	LEAD WIRE WITH CONNECTOR	
4			L77-1627-05	TCXO ACCESSORY	
4			L77-1628-05	TCXO ACCESSORY	
A			N87-3006-46	BRAZIER HEAD TAPTITE SCREW	
SELECTIVE CALL UNIT (X52-3300-20)					
D4-6			B30-2004-05	LED (RED)	
C1			CK73FF1E104Z	CHIP C 0.10UF Z	
C2			C92-0009-05	CHIP-TAN 4.7UF 10WV	
C3			CK73FF1E104Z	CHIP C 0.10UF Z	
C4			CQ92M1H184J	MYLAR 0.18UF J	
C5			C91-1167-05	LAMINATED C 0.015UF J	
C6			CQ92M1H104J	MYLAR 0.10UF J	
C7			CQ92M1H822J	MYLAR 8200PF J	
C8			CQ92M1H392J	MYLAR 3900PF J	
C9			CK73FF1E104Z	CHIP C 0.10UF Z	
C10			CK73FB1H103K	CHIP C 0.010UF K	
C11,12			CC73FCH1H330J	CHIP C 33PF J	
C13			CK73FF1E104Z	CHIP C 0.10UF Z	
C14			C92-0009-05	CHIP-TAN 4.7UF 10WV	
C15			CK73FF1E104Z	CHIP C 0.10UF Z	
C16			CQ92M1H153J	MYLAR 0.015UF J	
CN1			E40-3239-05	PIN ASSY	
CN2			E40-5758-05	FLAT CABLE CONNECTOR	
L1-4			L40-1801-18	SMALL FIXED INDUCTOR (18UH)	
X1			L78-0301-05	RESONATOR (3.5795MHZ)	
R1			RK73FB2A474J	CHIP R 470K J 1/10W	
R2,3			RK73FB2A472J	CHIP R 4.7K J 1/10W	
R4			RK73FB2A474J	CHIP R 470K J 1/10W	
R5			RK73FB2A393J	CHIP R 39K J 1/10W	
R6			RK73FB2A394J	CHIP R 390K J 1/10W	
R7			R92-0670-05	CHIP R 0 OHM	
R8			RK73FB2A104J	CHIP R 100K J 1/10W	
R9			RK73FB2A223J	CHIP R 22K J 1/10W	
R10			RK73FB2A332J	CHIP R 3.3K J 1/10W	
R11-13			RK73FB2A471J	CHIP R 470 J 1/10W	
R14			RK73FB2A473J	CHIP R 47K J 1/10W	
R15			RK73FB2A684J	CHIP R 680K J 1/10W	
R16			RK73FB2A334J	CHIP R 330K J 1/10W	
R17			RK73FB2A473J	CHIP R 47K J 1/10W	
VR1			R32-0754-05	SEMI FIXED VARIABLE RESISTOR (10K)	
S1			S62-0412-05	SLIDE SWITCH	
IC1			NJM2211M	MOS-IC	
IC2			SN74ALS04BNS	MOS-IC	
IC3			LC7385M	MOS-IC	

Packing

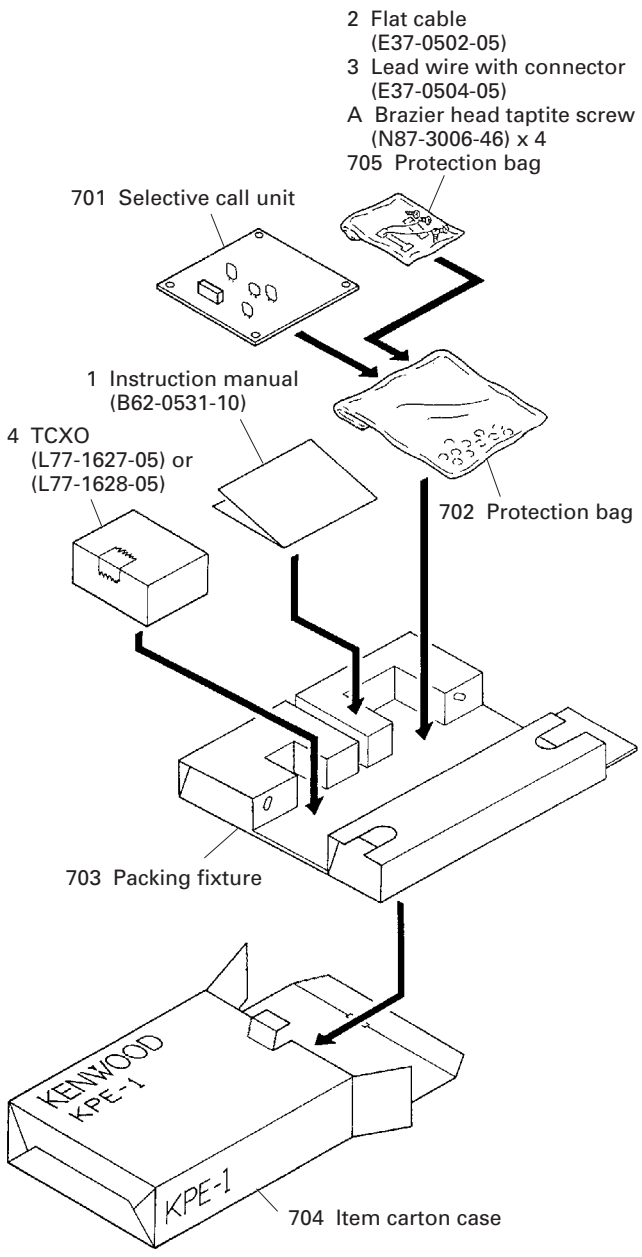

Parts with the exploded numbers larger than 700 are not supplied.

TK-80 KPE-1 (PC BOARD)

SELECTIVE CALL UNIT (X52-3300-20) Component side view

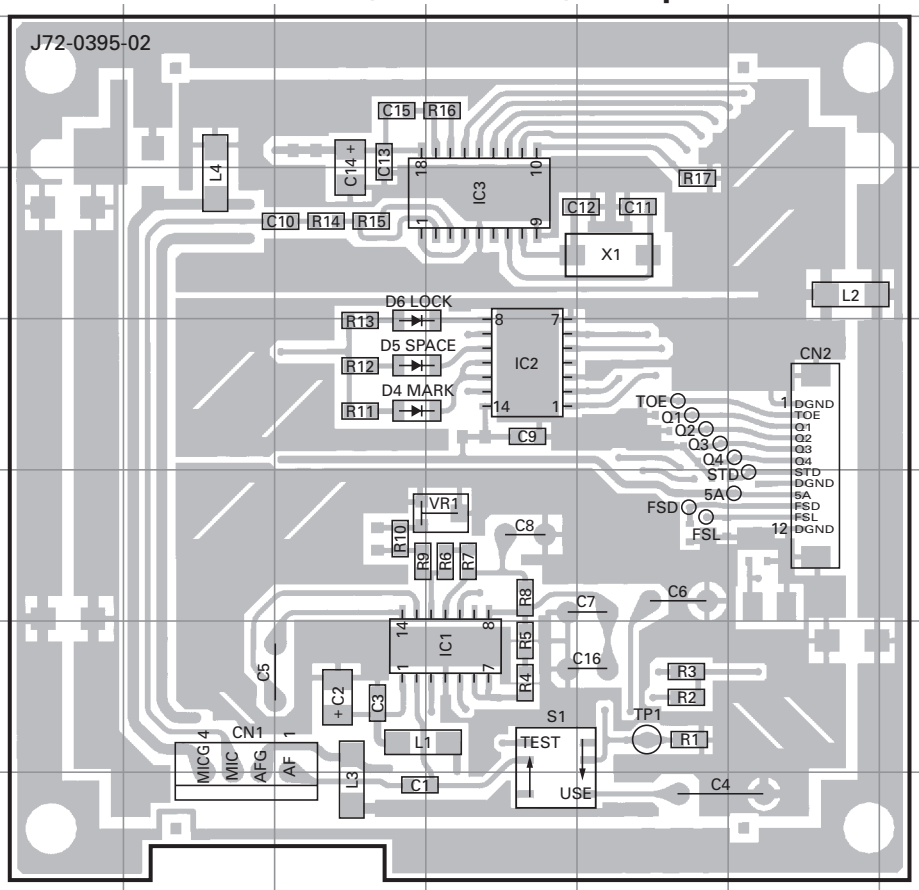

Ref. No.	Address
IC1	6E
IC2	4E
IC3	3E
D4	4D
D5	4D
D6	4D

Component side
Layer 1
Layer 2
Foil side

SELECTIVE CALL UNIT (X52-3300-20) Foil side view

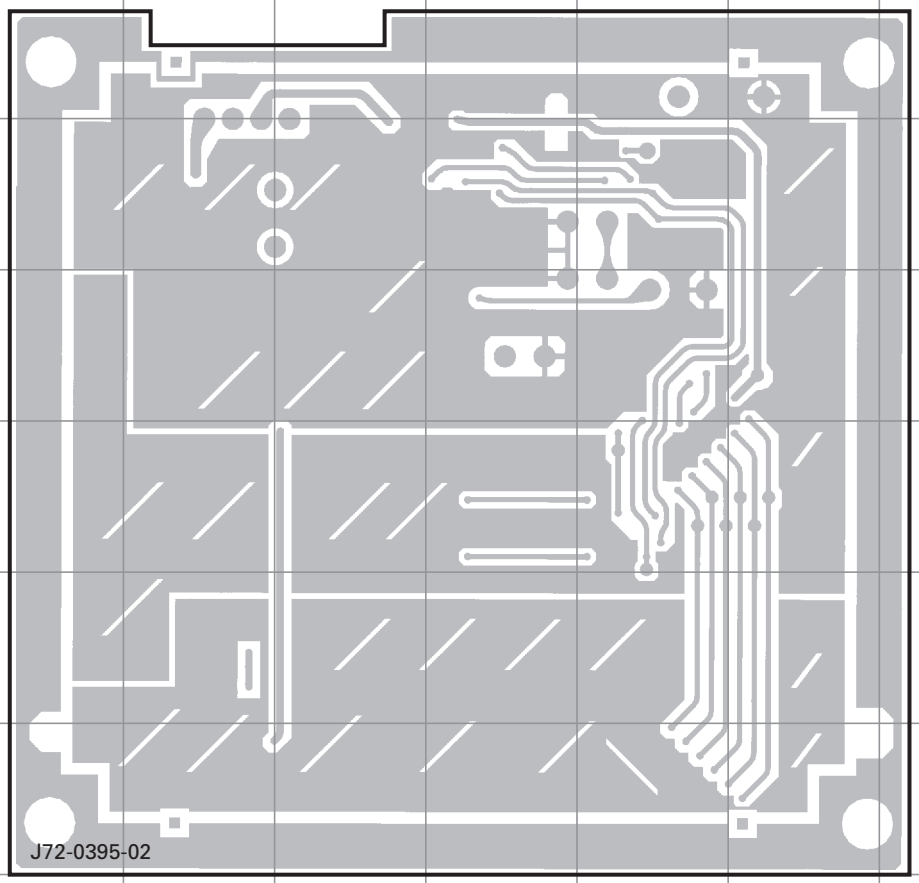

Component side
Layer 1
Layer 2
Foil side

SELECTIVE CALL UNIT (KPE-1) (OPTION) (X52-3300-20)

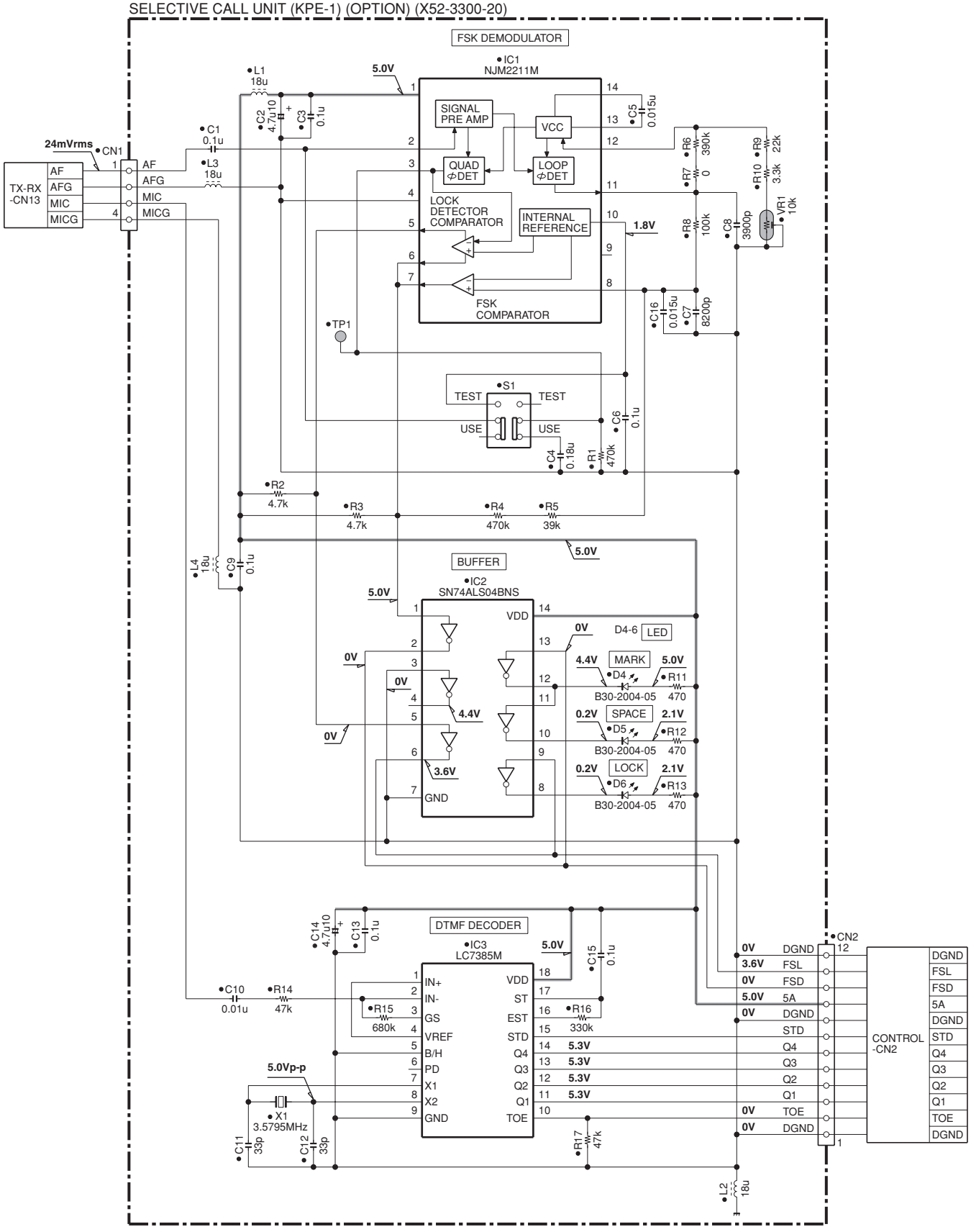

Note : The components marked with a dot (•) are parts of layer 1.

TK-80

SPECIFICATIONS

General

Transmitter frequency range
- TK-80 only ..... 1.8~2.39999MHz
  3.5~4.49999MHz
  6.0~7.99999MHz
  11.0~14.49999MHz
  16.0~21.49999MHz
  24.0~29.99999MHz
- TK-80 + KAT-2 ..... 2.0~2.39999MHz
  3.5~4.49999MHz
  6.0~7.99999MHz
  11.0~14.49999MHz
  16.0~21.49999MHz
  24.0~29.99999MHz

Receiver frequency range ..... 0.5~29.99999MHz
Modes ..... J3E (SSB), A1A (CW), A3E (AM), F1B (FSK), J2B (AFSK)
Operating temperature ..... –20°C~+60°C
Power requirement ..... 13.6V DC ±15% (negative ground)
Current drain
- Receive ..... Less than 1.45A
- Transmit ..... Less than 20.5A

Frequency stability ..... –10°C~+50°C, within ±10ppm
–20°C~+60°C, within ±15ppm
–10°C~+50°C, within ±0.5ppm (with SO-2)
–20°C~+60°C, within ±1.0ppm (with KPE-1)
Applicable MIL-STD ..... MIL-STD 810D: Vibration, Method 514.3, Category 10, Procedure 1
Antenna impedance 50Ω
Dimensions (W x H x D)
..... 270 (10-5/8) x 96 (3-3/4) x 271 (10-11/16) mm (inch)
Weight (net) ..... 5.2kg (11.5 lbs)

Receiver

Circuitry ..... Double conversion superheterodyne
Intermediate frequencies
- 1st IF 73.045MHz
- 2nd IF 10.695MHz

Sensitivity
- SSB/CW/FSK (10dB S/N) ..... Less than 1μV (0.5~1.79999MHz)
  Less than 0.25μV (1.8~29.99999MHz)
- AM (10dB S/N) ..... Less than 7.94μV (0.5~1.79999MHz)
  Less than 2.5μV (1.8~29.99999MHz)

Spurious response
- IF image ratio ..... More than 70dB
- IF rejection ..... More than 80dB

Selectivity
- SSB/CW/FSK ..... More than 2.2kHz (–6dB)
  Less than 4.8kHz (–60dB)
- AM ..... More than 5.0kHz (–6dB)
  Less than 40.0kHz (–60dB)
- CW (with YK-107C) ..... More than 0.5kHz (–6dB)
  Less than 2.0kHz (–50dB)

Clarifier variable range ..... ±1.1kHz (10Hz step)
Dealer setting: ±110Hz (1Hz step)
Audio output ..... More than 3.5W (4Ω, 10% distortion)
Audio output impedance 4Ω

Transmitter

RF power output
- SSB/CW/FSK 100W
- AM (unmodulated signal) 25W

Carrier suppression ..... More than 40dB
Unwanted sideband suppression ..... More than 50dB (1.0kHz)
Microphone impedance 600Ω

Optional accessories

KAT-2 (Internal automatic antenna tuner)
KAT-1 (External automatic antenna tuner)
MC-60A (Desktop microphone)
KPE-1 (Selective call kit)
KIF-1 (SSB filter 2.7kHz)
YK-107C (CW filter 500Hz)
SO-2 (Temperature controlled crystal oscillator; TCXO)
PC-1A (Phone patch interface)
MB-430 (Mobile mount bracket)
PS-53 (DC power supply 22.5A)
PS-33 (DC power supply 20.5A)
HS-6 (Headphones)

Kenwood Corporation

2967-3, Ishikawa-machi, Hachioji-shi, Tokyo, 192-8525 Japan

Kenwood U.S.A. Corporation

P.O. BOX 22745, 2201 East Dominguez Street, Long Beach, CA 90801-5745, U.S.A.

Kenwood Electronics Canada Inc.

6070 Kestrel Road, Mississauga, Ontario, Canada L5T 1S8

Kenwood Electronics Deutschland GmbH

Rembrücker Str. 15, 63150 Heusenstamm, Germany

Kenwood Electronics Belgium N.V.

Leuvensesteenweg 248 J, 1800 Vilvoorde, Belgium

Kenwood Electronics France S.A.

L'Etoile Paris Nord 2, 50 Allée des Impressionnistes, Bp 58416 Villepinte, 95944 Roissy Ch De Gaulle Cedex

Kenwood Electronics UK Limited

KENWOOD House, Dwight Road, Watford, Herts., WD18 9EB United Kingdom

Kenwood Electronics Europe B.V.

Amsterdamseweg 37, 1422 AC Uithoorn, The Netherlands

Kenwood Electronics Italia S.p.A.

Via G. Sirtori, 7/9 20129 Milano, Italy

Kenwood Ibérica, S.A.

Bolivia, 239-08020 Barcelona, Spain

Kenwood Electronics Australia Pty. Ltd.

(A.C.N. 001 499 074)
16 Giffnock Avenue, Centrecourt Estate, North Ryde, N.S.W. 2113 Australia

Kenwood Electronics (Hong Kong) Ltd.

Unit 3712-3724, Level 37, Tower one Metroplaza, 223 Hing Fong Road, Kwai Fong, N.T., Hong Kong

Kenwood Electronics Singapore Pte Ltd

1 Ang Mo Kio Street 63, Singapore 569110