Radio Receiver RX-321

The Manual That Never Was

Frank Gentges K0BRA
based on a webpage by
Jim Handcock

December 2007

TABLE OF CONTENTS

Preface	3
Chapter 1, General Information	4
Chapter 2, Operation	6
Chapter 3, Functional Description	12
Chapter 4, Circuit Diagrams	15
Appendix 1, eBay Auction Text	27
Appendix 2, Reviews	29
Appendix 3, Toys	34
Appendix 4, User Groups	35

PREFACE

Globe Wireless contracted with Ten Tec a some years ago to produce a modified version of the RX-320 for shipboard use as a secondary receiver in their shipboard communications system, and Ten-Tec designated it the RX-321. GW was able to do this as GW is one of Ten-Tec's single largest customers. GW uses the RX-330(A&B) and the RX-331 receivers at their shore side stations of their global HF digital maritime communications network. They have well over 300 of them in use worldwide with great success.

As delivered to GW, there is a hardware remote control, with volume and on/off controls, two GMDSS modules, as well as a speaker and LED indicators all in a machined box. Also included is a spool of coax cable, and a huge weatherized metal enclosure.

The RX321 was based on the RX320 and was built to their specifications for Globe Wireless for a shipboard GMDSS project..

> "The Global Maritime Distress and Safety System (GMDSS) is an international system which uses improved terrestrial and satellite technology and ship-board radio systems. It ensures rapid alerting of shore-based rescue and communications authorities in the event of an emergency. In addition, the system alerts vessels in the immediate vicinity and provides improved means of locating survivors." -Globe Wireless in letter to Ten-Tec

Globe Wireless abandoned the project and sold off the unused units – best guess as to quantity is around 100 units.

Ten-Tec has made it clear that they do not provide support for the RX-321. It seems no manual was ever prepared for the RX-321 and Globe Wireless just relied on the unit's niche application and in-house engineering to avoid having to ever need to pass an understanding of how the receiver works or is used. Jim Handcock started collecting information on the RX-321 and put up a fine web page at

http://blacktailbooks.com/rx321.html

A lot of people provided tidbits and pieces of the RX-321 for his web site. We saw a need for a User Guide for the RX-321. This should be something a RX-321 owner could print out and have to refer to from time to time about the receiver. We mainly used Jim's web site and a few other pieces to construct **Radio Receiver RX-321 The Manual That Never Was**.

A real tip of the hat to Jim and all his contributors. Jim is very much into books with his own bookstore out in Kalispell Montana. What a great way work and place to live.

Frank Gentges K0BRA

CHAPTER 1

GENERAL INFORMATION

The RX-321 DSP HF receiver is a computer controlled communications receiver which contains Radio Frequency (RF) and Digital Signal Processing (DSP) circuitry to receive radio signals and convert them to audio. Unlike conventional receivers, the RX-321 has no front panel controls and instead relies on the computer for all user functions of control and display.

The RX-321 is a triple conversion receiver with intermediate frequencies of 45 MHz, 455 kHz and 12 kHz-the final conversion being for the DSP circuitry. The receiver covers the range of 100 kHz to 30 MHz and provides for AM, SSB and CW reception. The RF circuitry provides for tuning in 1 Hz steps with 10 Hz accuracy and the DSP circuitry provides 33 selectable bandwidths. The RF circuitry also provides a set of ½ octave passband filters and high dynamic range mixers for high performance in the presence of other local signals. The receiver runs off of a single DC source of 12 to 28 volts DC. Pictures of the receiver front is shown in Figure 1 and the rear in Figure 2.

FIGURE 1: RX-321 Front View

FIGURE 2: RX-321 Rear View

CHAPTER 2

OPERATION

The RX-321 control software defines the operation of the receiver. A large number of software programs have been written for the RX-320 and work for the RX-320. Each program seeks to provide a set of displays and controls to meet the operational needs of the user. As a diverse set of users seek different features, diverse software provides different functions and features. Each user should try the different programs and select those programs best suited to the use and needs of that user.

Most RX-320/RX-321 control programs present the receiver with a front panel looking much like a traditional receiver and controls. The user should consult the documentation for each program to determine the details of operation.

The RX-321 utilizes the same serial control interface as the RX-320. Ten Tec control software (and others, including the Palm OS version) works exactly the same. Receiver parameters available (as observed) are the same. The front end bandpass filters are selected by the RX-321 firmware and the process is transparent to the receiver tuning process.

For details on writing software for RX-320/RX-321 tuning and control, refer to the RX-320 PC RADIO Programmer's Reference Guide.

Physical:

8 inches wide x 8 inches deep x 3 inches high.
Bottom mounting ears with holes for bulkhead mounting are provided.

Receiver Frequency Coverage:

100 kHz to 30 MHz

Receiver Tuning Step:

1 Hz tuning steps

Receiver Modes:

Amplitude modulation (AM)
Lower sideband (LSB)
Upper sideband (USB)
Continuous-wave (CW)

Receiver Performance:

AM sensitivity: 0.64 uV, wide filter
(80% modulation, 1 kHz tone, 12 dB S+N/N).

SSB sensitivity is 0.3 uV, 2.5 kHz filter.

Receiver Bandwidths:

Filter #	Bandwidth
0	6000
1	5700
2	5400
3	5100
4	4800
5	4500
6	4200
7	3900
8	3600
9	3300
10	3000
11	2850

Filter #	Bandwidth
12	2700
13	2550
14	2400
15	2250
16	2100
17	1950
18	1800
19	1650
20	1500
21	1350
22	1200
23	1050

Filter #	Bandwidth
24	900
25	750
26	675
27	600
28	525
29	450
30	375
31	330
32	300
33	8000

Receiver Input:

Power: DC power of 12-28 VDC on a barrier terminal strip.
An On-Off switch is provided on the rear panel
A power indicator is provided on the rear panel

Antenna: SO-239 connector

Receiver Output:

Audio Output: Speaker, barrier terminal strip
DB9-M connector includes remote features with the following pinouts:

Pin 1 Line audio (balanced)
Pin 6 Line audio (center tap)
Pin 2 Line audio (balanced)
Pin 5 Mute (?) (ground to mute?)
Pin 9 Ground
(The line transformer is a standard feature of remote site receivers for 600R balanced lines.)

Receiver Intermodulation Performance:

3rd order: +15 dBm intercept point
2nd order: +60 dBm intercept point

The RX-321 has a set of front end bandpass filters and controls these filters transparently and no special tuning commands are required to to control them.

Receiver Control:

Serial Interface: DB9-F connector
USB Adapters: USB Port to RX-321 Operation:

Some computers are not supplied with a serial port but do have a USB port. Some users with these computers use a USB to Serial converter. Some converters known to work well in this application are:

- Belkin Usb To Serial Portable Adaptor, Part # F5U409v1, the Belkin F5U103 and F5U109 usually work well also.
- Tripplite Usb/Serial Converter Cable
- Keyspan USA-19QW or USA-19W
- Cables To Go USB To Db9 Serial Adapter USBa/db9m Rs-232
- The RadioShack 9 pin Serial to USB adapter cat#26-183 works well through both USB 2.0 ports and through powered USB hubs.
- IOgear GUC232A works great with the RX-320D. It also has drivers for Vista (not with the hardware; you have to download new drivers).

CALLSIGN SOFTWARE provides some insights on problems with these.

"USERS WITH USB to SERIAL Adapters: Some of our users have had many problems with these devices because most cannot keep up with the duty cycle rates of a NULL Modem or the supplied software driver does not properly comply with the Microsoft Windows(c) Driver model. NULL Modem compliance means that they MUST be capable of sustaining a continuous data stream much like that encountered when downloading files. They must also support modem controls for data flow control which we use on all the radio products that support this.

Failure of the USB/Serial Adapter to comply with this will result in improper operation of the software. These capabilities must be stated on the product. We recommend the RadioShack 9 pin Serial to USB adapter cat#26-183. It is less than $50.00, comes with an XP and 2000 driver, and is widely available. We have been using this adapter (four of them) and have had no problems with them on Window's 2000, XP PRO, and XP Home. We have been using them with a USB 2.0 port and a four port USB 2.0 hub. We have also tested the software with PCMCIA (Serial Gear RS-232C) to serial adapters. We have thoroughly tested the software with the previously mentioned adapter(s) and found no problem with them for the past three(3) years. These adapters have software drivers that are well behaved in Windows and do not interfere with the operation of Window's, or other drivers, as some VERY POORLY written drivers do from some of the other vendors."

Control Programs

Ten-Tec had the wisdom to publish the control codes for the RX320 as RX-320 PC RADIO Programmer's Reference Guide. The result was a number of different programs to control and display the RX-320. These programs work transparently with the RX-321 and the Past & present RX320/RX321 Control programs, mods are shown here. Some of these programs are in the Files section of the Yahoo RX320 group. See the Monitoring Times article at:

<http://www.monitoringtimes.com/html/mtrx320.html>

on the RX320 for more information.

SHORTWAVE LOG

<http://www.shortwavelog.com>

Natively supports the RX321 & allows the RX321 to be controlled remotely via a web page.

SCAN320

<http://www.mindspring.com/%7Etom2000/rx320/Scan320.html>

Designed for scanning Utes, modified for general purpose

RxPlus

<http://teledata.qc.ca/RxPlus/>

Swiss Army Knife. it does it all with DSP.

MICHAEL A. NEWELL

<http://wb4huc.home.texas.net/rx320>

Software for the Palm OS

George Privalov's Synchronous AM Controller

<http://www.apptd.com/rx320.htm>

Ten-Tec

<http://www.tentec.com>

OEM software

TRX MANAGER

<http://www.trx-manager.com/>

CLIFTON TURNER'S RX320 & DB320

<http://www.qsl.net/ab9b/KF5OJ/>

The first and still about the best.

Gerd Niephaus' GNRX320

<http://www.boatanchors.de/software/>

can use the Klingenfuss Ute database.

N4PY

<http://www.qsl.net/tentec/>

Radio320

<http://www.tufox.com/jim/rx320/index.html>

Designed for function.

RXWings

<http://home.wxs.nl/%7Ejarkest/swl/swl.html>

DXTRA

<http://www.dxtra.com>

ERGO

<http://swldx.com/>

RXtra320

<http://www.ip.pt/coaa/rxtra320.htm>

SCANCAT

<http://www.scancat.com>

Scopestation

<#>

The closest thing to a Ham controller.

RX320 software for Linux

<http://xclass.sourceforge.net/rx320.html>

*Click here to install xclass for above Linux program
<http://xclass.sourceforge.net/rx320.html>*

Hamsoft Linux Controller

<#>

PenguinSoft linux Controller

<http://www.penguin-soft.com/penguin/man/1/rx320.html>

Debian RX320 package

<http://packages.debian.org/sarge/rx320>

PDA Cogwheel

<http://www.cogwheel.com/rx320/index.php>

Dos programs

Tom Cooper

<http://home.att.net/%7Ejacksonharbor/rx320.htm>

David Wilson

<http://www.erols.com/dlwilson/rx4.exe>

A hardware controller & case for the RX32 radios <#>*

CHAPTER 3

FUNCTIONAL DESCRIPTION

RX-320/RX-321 Design Details and Differences:

- The basic heterodyne scheme is shown Figure 4.

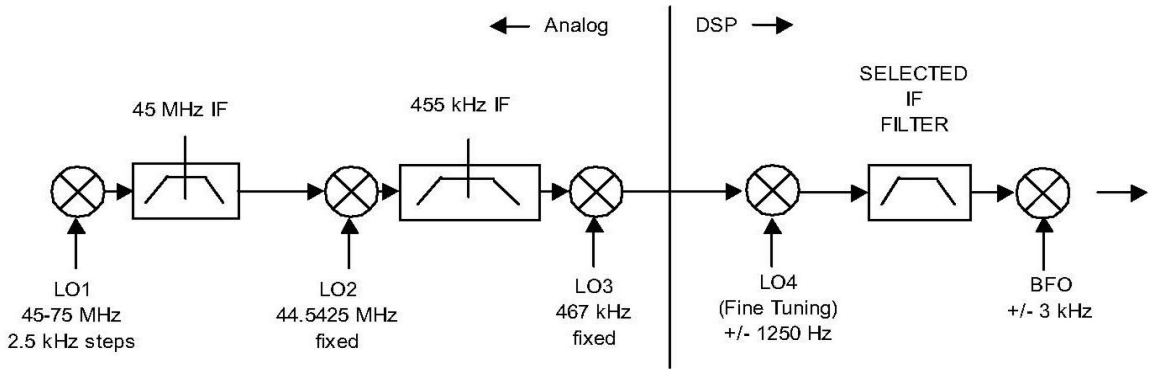

FIGURE 4: RX-320/RX-321 Mixing Block Diagram

- Receiver Tuning Speed:
  When changing synthesizer frequency, there is significant "chuffing" (short noise bursts as the synthesizer steps in frequency) at times, enough to make VFO type operation (many steps over a short time interval) somewhat annoying to the listener.

  The RX-321 is intended for use in a channelized system without the need for frequent retuning. The "chuffing" is probably a result of lengthened PLL loop filter time constants to improve the phase noise characteristics of the synthesizer, and the chuffing noise is generated as the PLL unlocks temporarily upon a frequency change.

  There is a compromise in PLL design between lock time and VCO phase noise, and apparently Ten Tec chose to favor decreased phase noise over lock time in their design, which is acceptable in this application. This kept costs down by eliminating the need for a higher-performance, i.e. More complex and expensive synthesizer.

- TCXO's for 2nd and 3rd LO oscillators are added. The RX321 is dead on within 10Hz cold or

warm.

Reference Oscillators: The two oscillator cans on the RF board are not "ovenized" but are TCXOs (Temperature Compensated Crystal Oscillators) built most likely by Fordahl and are spec'd at +/- 10 Hz over 0 to 40 degrees C. These TCXOs bear the part number of "DFA 14 KHV". From Fordahl's "Generic Ordering Codes" sheet this part number translates as:

DFA = TCXO
14= DIL 14 (dual in-line 14 pin)
K= -30 to +60 degrees C
H= HCMOS logic level output
V=external control voltage.
That final V suggests the little pots (R104 and R106) next to the oscillators create a trimming voltage to put each on its frequency.

- 7 front end filters added. switched by pin diodes. Firmware provides control of this front end filtering.
- 1st mixer has improved double-balanced quad fet mixer for higher IP values.
- AGC injection on 3 points with extra gain controlled dual-gate FET right after 45 MHz IF filter.
- Added Pin diode AGC following preselection and 45Mhz filter.
- The active antenna circuitry inside the RX320 is gone with the RX321. That circuit could have been a source of intermodulation products.
- The antenna connector is an SO-239 on the RX321 instead of the RCA plug on the RX320.
- The DC power is shown as 12-28VDC on the RX321 instead of the unspecified power on the RX320.
- Power supply: separate board for voltages. Added a step-up voltage regulator for higher voltages for front end. I measured 18V to front end. Low ripple and noise.
- DC power and the speaker connect via a terminal strip on the RX321 while the RX320 uses phone plugs and DC coaxial connectors.
- RS232 device is a ADM232AARN instead of max232 type.
- Remote audio line out on the RX321 is a balanced, center tapped transformer. Line level audio output through an isolation transformer, balanced audio out.

- The RX321 has a mute connection.
- The RX321 comes with a nice little 120 VAC to 12 VDC switching power supply.
- The RX321 has a power LED and a more rugged power switch.
- The RX321 runs on RX320 software and it seems to work just fine with all functions doing what they should. The DSP board is slightly different with a different part number and different EPROM identifier.
- The IF is not brought out like on the RX320D for digital radio. The cable can be spliced and an IF output added.
- It works down to 100 kHz.

CHAPTER 4

CIRCUIT DIAGRAMS

Somewhere along the line, an anonymous person provided a set of circuit diagrams for the RX-321. We are all appreciative for these.

Prior to this, we took a picture of the RF board and marked the various circuit areas and what function was in each place. That picture is included. It should prove helpful for finding different parts of the circuitry for modification or repair.

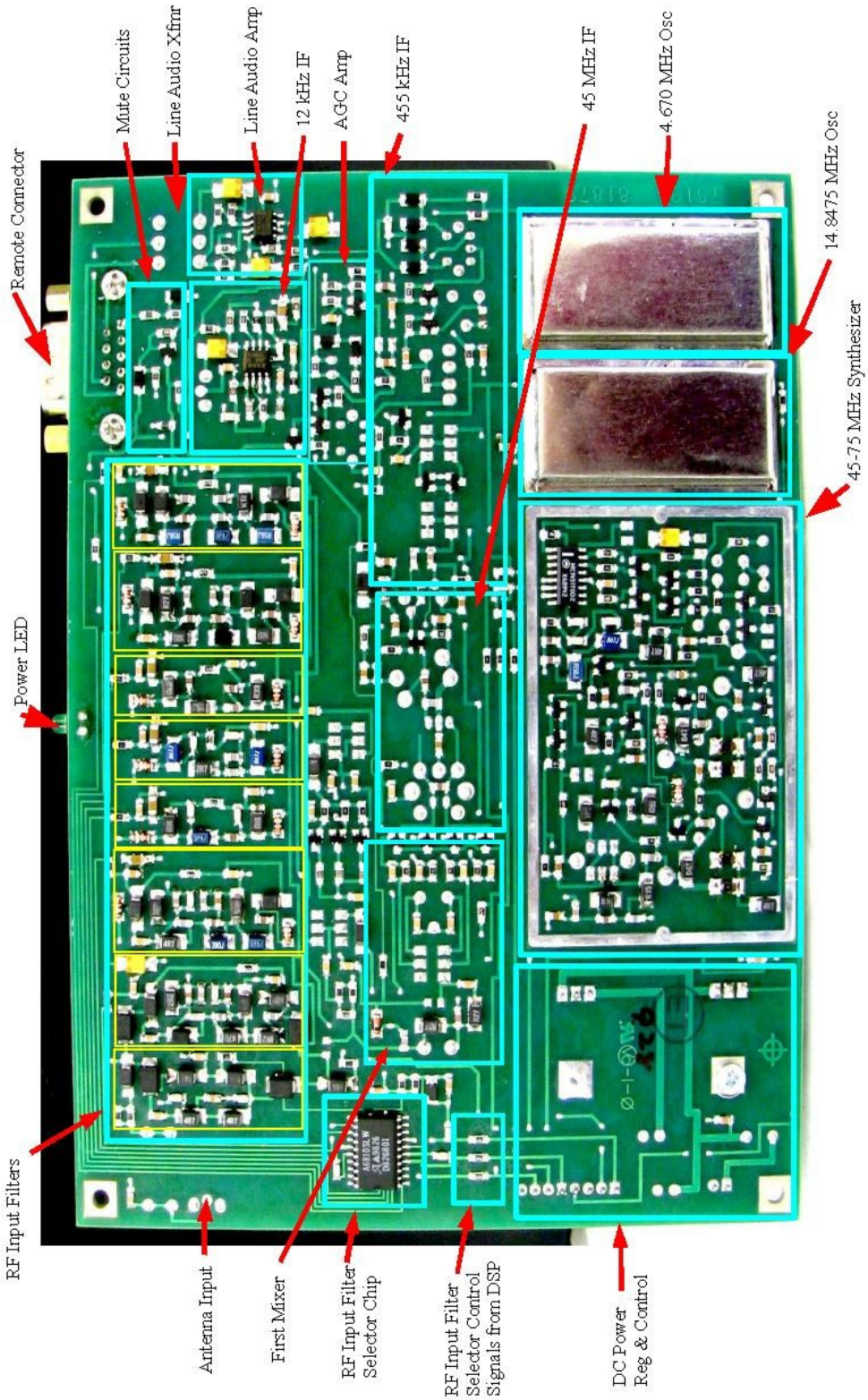

RX-321 RF Board Layout, Bottom

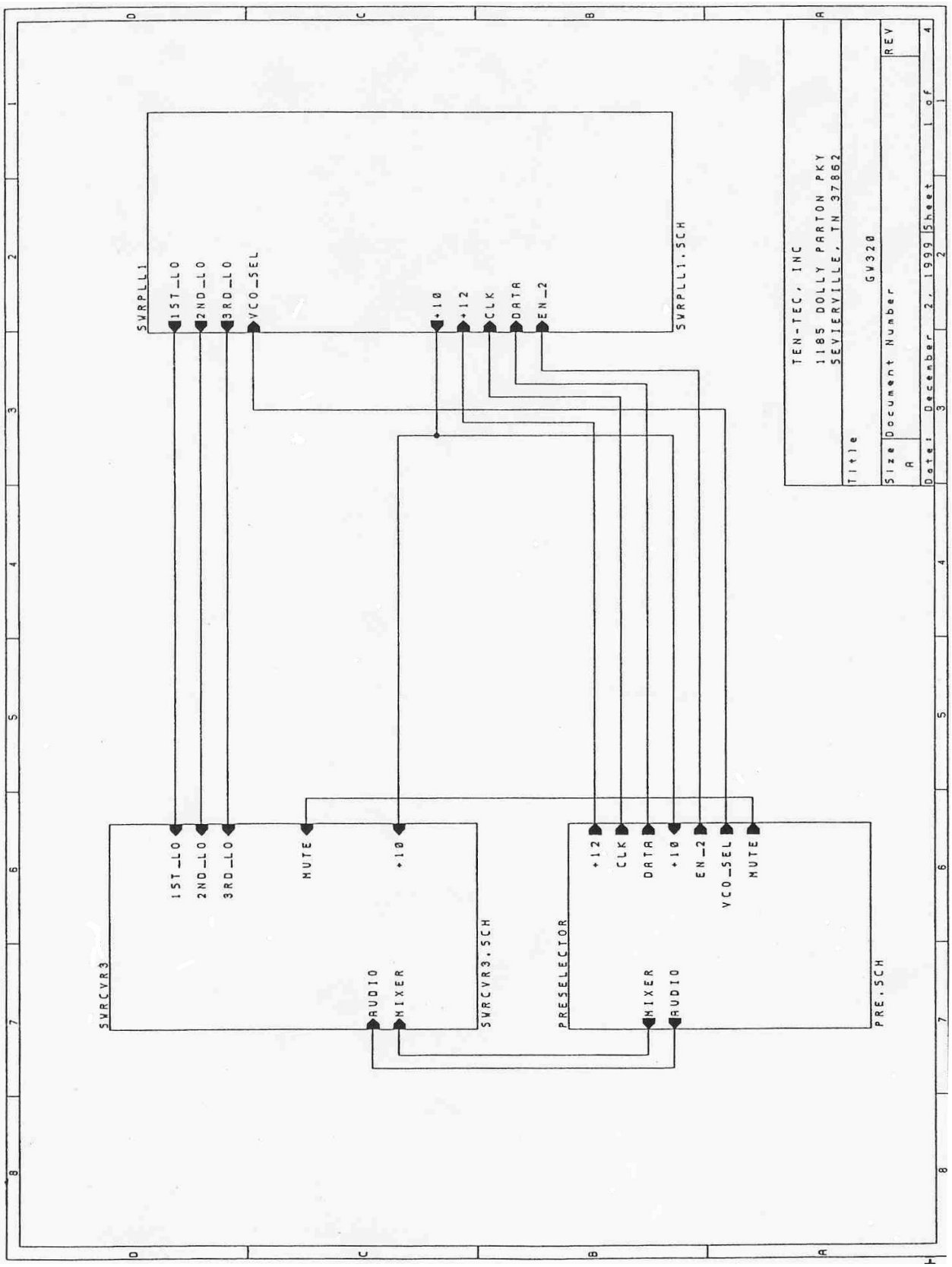
SVRPLL1
1ST_LO
2ND_LO
3RD_LO
VCO_SEL
+10
+12
CLK
DATA
EN_2
SVRPLL1.SCH
TEN-TEC, INC
1185 DOLLY PARTON PKY
SEVIERVILLE, TN 37862
Title
GV320
Size
A
Document Number
REV
Date: December 2, 1999
Sheet 1 of 1
1ST_LO
2ND_LO
3RD_LO
MUTE
+10
AUDIO
MIXER
SVRCVR3
SVRCVR3.SCH
+12
CLK
DATA
+10
EN_2
VCO_SEL
MUTE
MIXER
AUDIO
PRESELECTOR
PRE.SCH

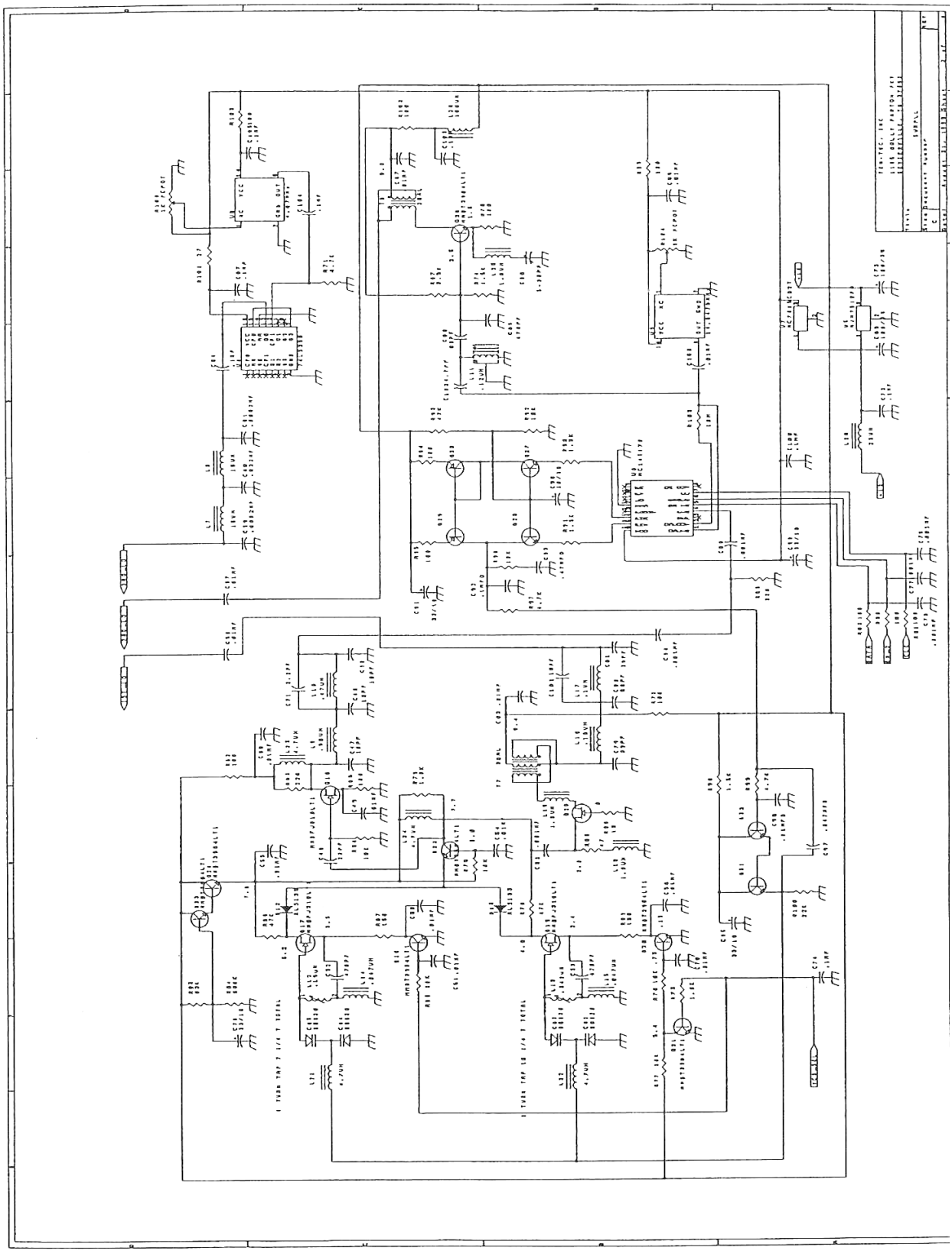

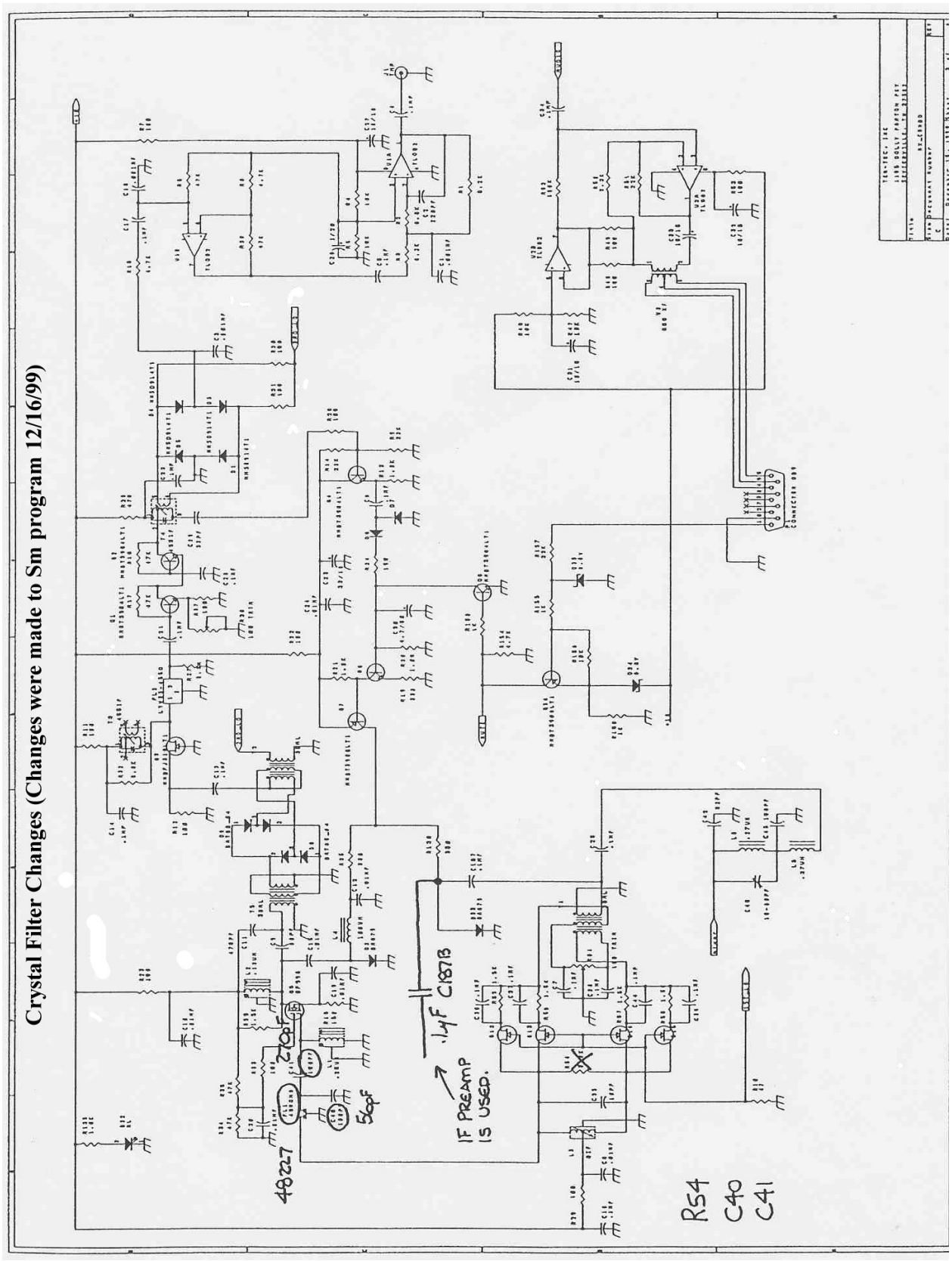
Crystal Filter Changes (Changes were made to Sm program 12/16/99)
.1μF C187B
IF PREAMP IS USED.
270pf
56pf
49.27
RS4
C40
C41

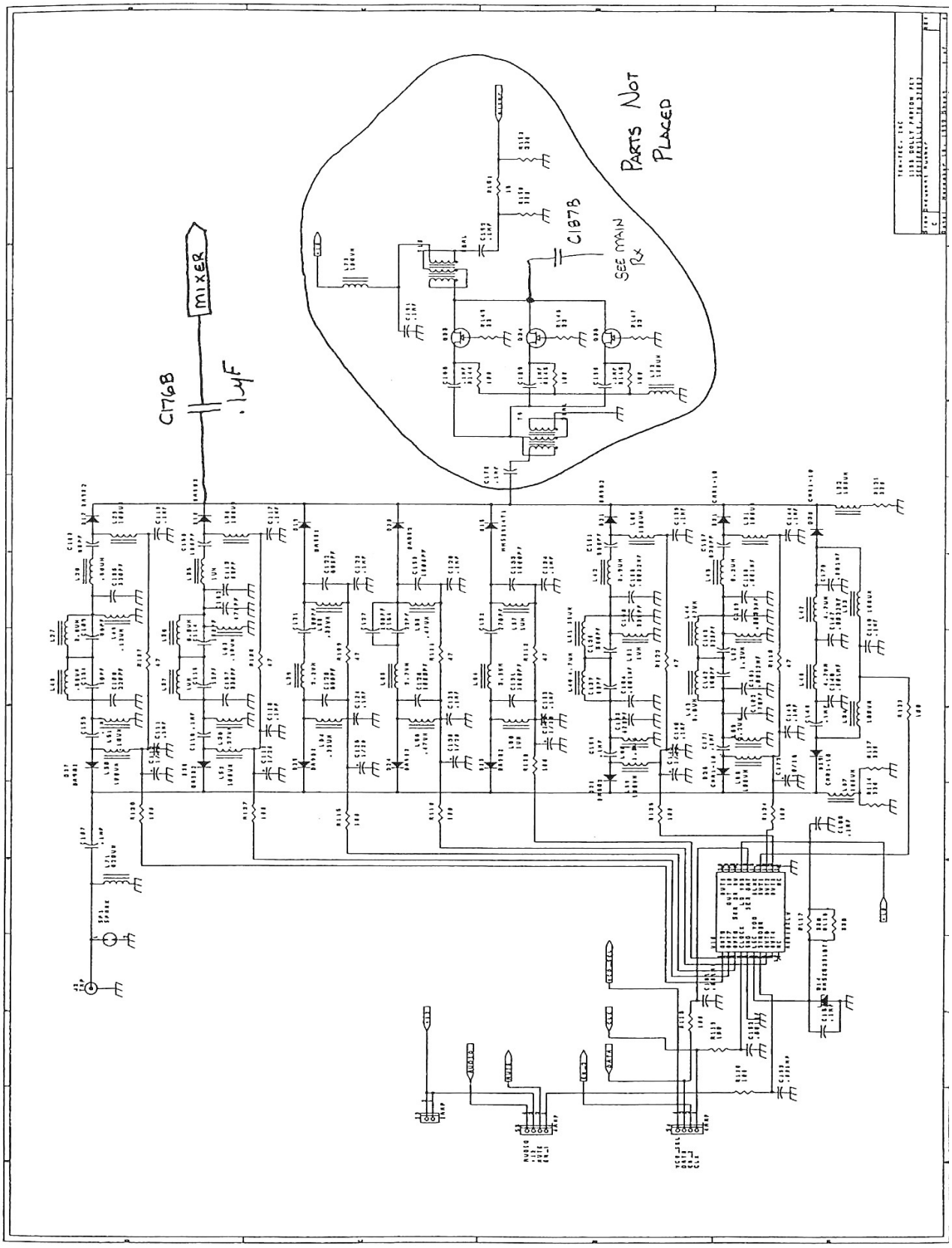
PARTS NOT PLACED
C187B
SEE MAIN RX
MIXER
C176B
.1μF

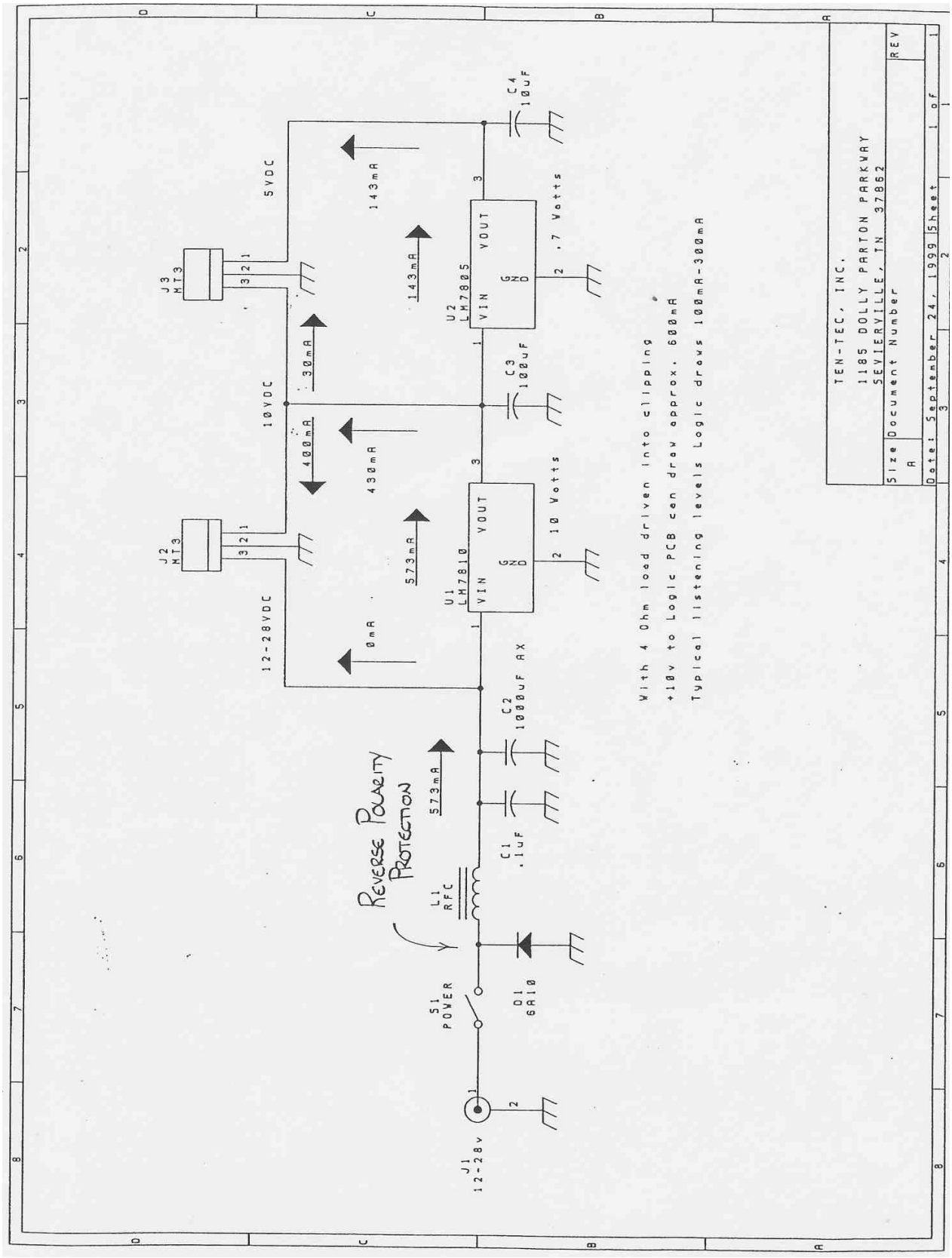
TEN-TEC, INC.
1185 DOLLY PARTON PARKWAY
SEVIERVILLE, TN 37862
Size A
Document Number
REV
Date: September 24, 1999 Sheet 1 of 1
J1 12-28v
J2 MT3
J3 MT3
S1 POWER
D1 6A10
L1 RFC
C1 .1uF
C2 1000uF RX
C3 100uF
C4 10uF
U1 LM7810 VIN GND VOUT
U2 LM7805 VIN GND VOUT
12-28VDC
10VDC
5VDC
0mA
573mA
400mA
430mA
30mA
143mA
143mA
573mA
573mA
10 Volts
.7 Volts
REVERSE POLARITY PROTECTION
With 4 Ohm load driven into clipping
+10v to Logic PCB can draw approx. 600mA
Typical listening levels Logic draws 100mA-300mA

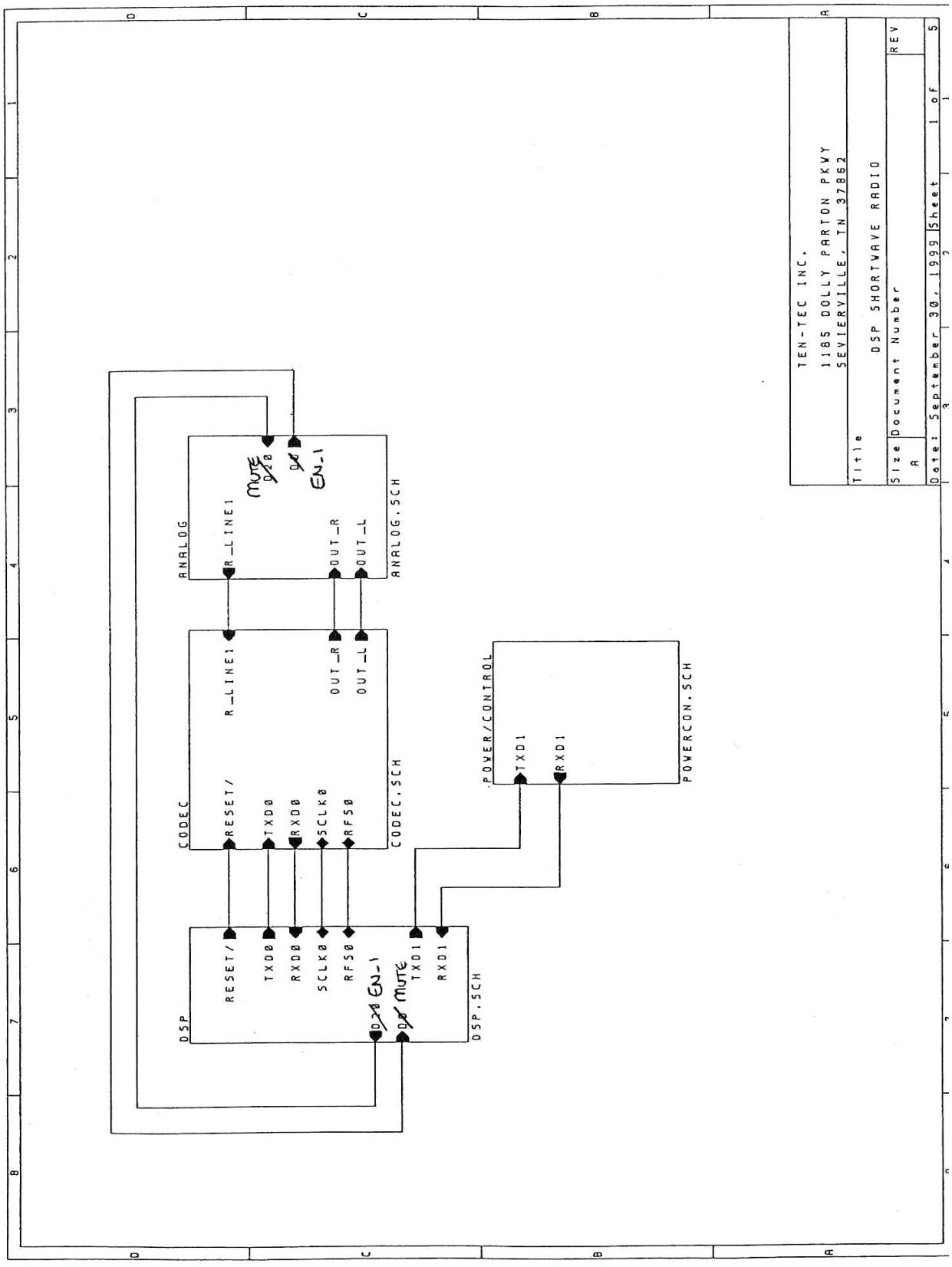
TEN-TEC INC.
1185 DOLLY PARTON PKWY
SEVIERVILLE, TN 37862
Title
DSP SHORTWAVE RADIO
Size
A
Document Number
REV
Date: September 30, 1999
Sheet 1 of 5
ANALOG
R_LINE1
MUTE
EN_1
OUT_R
OUT_L
ANALOG.SCH
CODEC
RESET/
TXD0
RXD0
SCLK0
RFS0
R_LINE1
OUT_R
OUT_L
CODEC.SCH
POWER/CONTROL
TXD1
RXD1
POWERCON.SCH
DSP
RESET/
TXD0
RXD0
SCLK0
RFS0
EN_1
MUTE
TXD1
RXD1
DSP.SCH

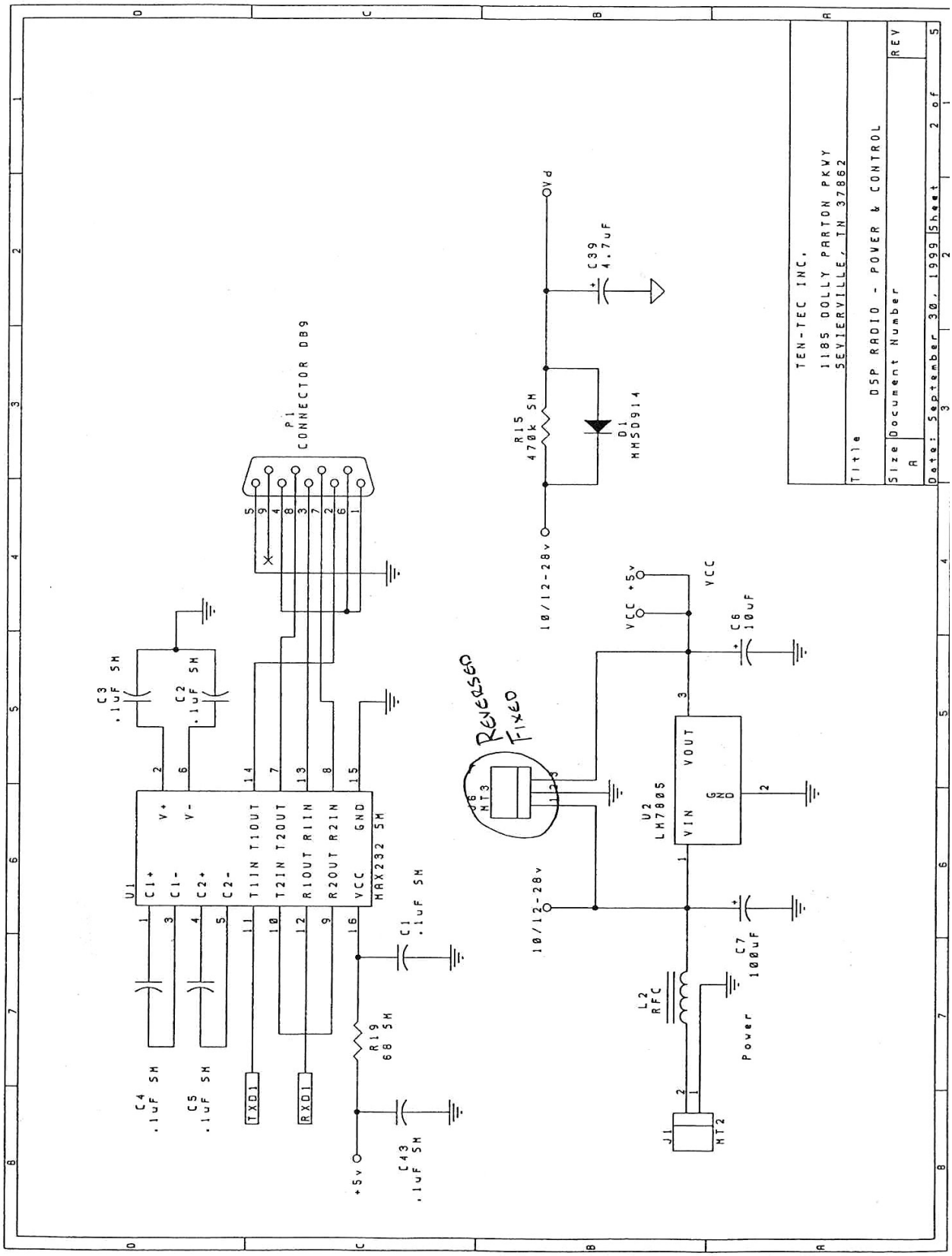
TEN-TEC INC.
1185 DOLLY PARTON PKWY
SEVIERVILLE, TN 37862
Title
DSP RADIO - POWER & CONTROL
Size A
Document Number
REV
Date: September 30, 1999 Sheet 2 of 2
P1
CONNECTOR DB9
U1
MAX232 SM
C1+
C1-
C2+
C2-
V+
V-
T1IN T1OUT
T2IN T2OUT
R1OUT R1IN
R2OUT R2IN
VCC
GND
C1 .1uF SM
C2 .1uF SM
C3 .1uF SM
C4 .1uF SM
C5 .1uF SM
C43 .1uF SM
R19 68 SM
TXD1
RXD1
+5v
Vd
C39 4.7uF
R15 470k SM
D1 MMSD914
10/12-28v
VCC +5v
VCC
C6 10uF
Released
Fixed
J6 MT3
U2 LM7805
VIN
VOUT
GND
C7 100uF
L2 RFC
Power
J1 MT2

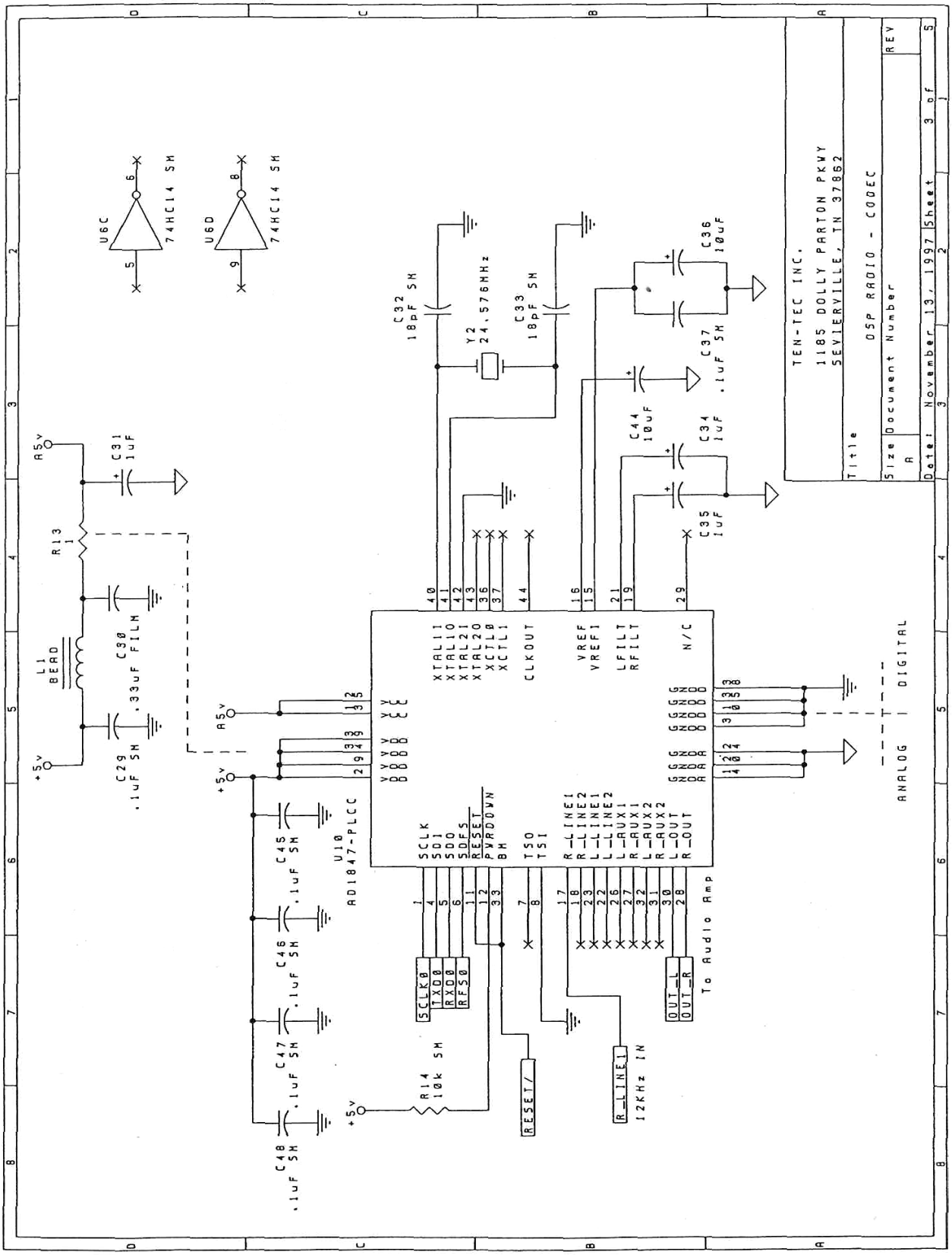
TEN-TEC INC.
1185 DOLLY PARTON PKWY
SEVIERVILLE, TN 37862
Title
DSP RADIO - CODEC
Size Document Number
A
REV
Date: November 13, 1997 Sheet 3 of 5
U10
AD1847-PLCC
U6C
74HC14 SM
U6D
74HC14 SM
Y2
24.576MHz
C32
18pF SM
C33
18pF SM
C36
10uF
C37
.1uF SM
C44
10uF
C34
1uF
C35
1uF
C31
1uF
R13
1
L1
BEAD
C30
.33uF FILM
C29
.1uF SM
C45
.1uF SM
C46
.1uF SM
C47
.1uF SM
C48
.1uF SM
R14
10k SM
+5v
A5v
XTAL1I
XTAL1O
XTAL2I
XTAL2O
XCTL0
XCTL1
CLKOUT
VREF
VREFI
LFILT
RFILT
N/C
SCLK
SDI
SDO
SDFS
RESET
PWRDWN
BM
TSO
TSI
R_LINE1
R_LINE2
L_LINE1
L_LINE2
L_AUX1
R_AUX1
L_AUX2
R_AUX2
L_OUT
R_OUT
SCLK0
TXD0
RXD0
RFS0
OUT_L
OUT_R
To Audio Amp
RESET/
R_LINE1
12KHz IN
ANALOG | DIGITAL

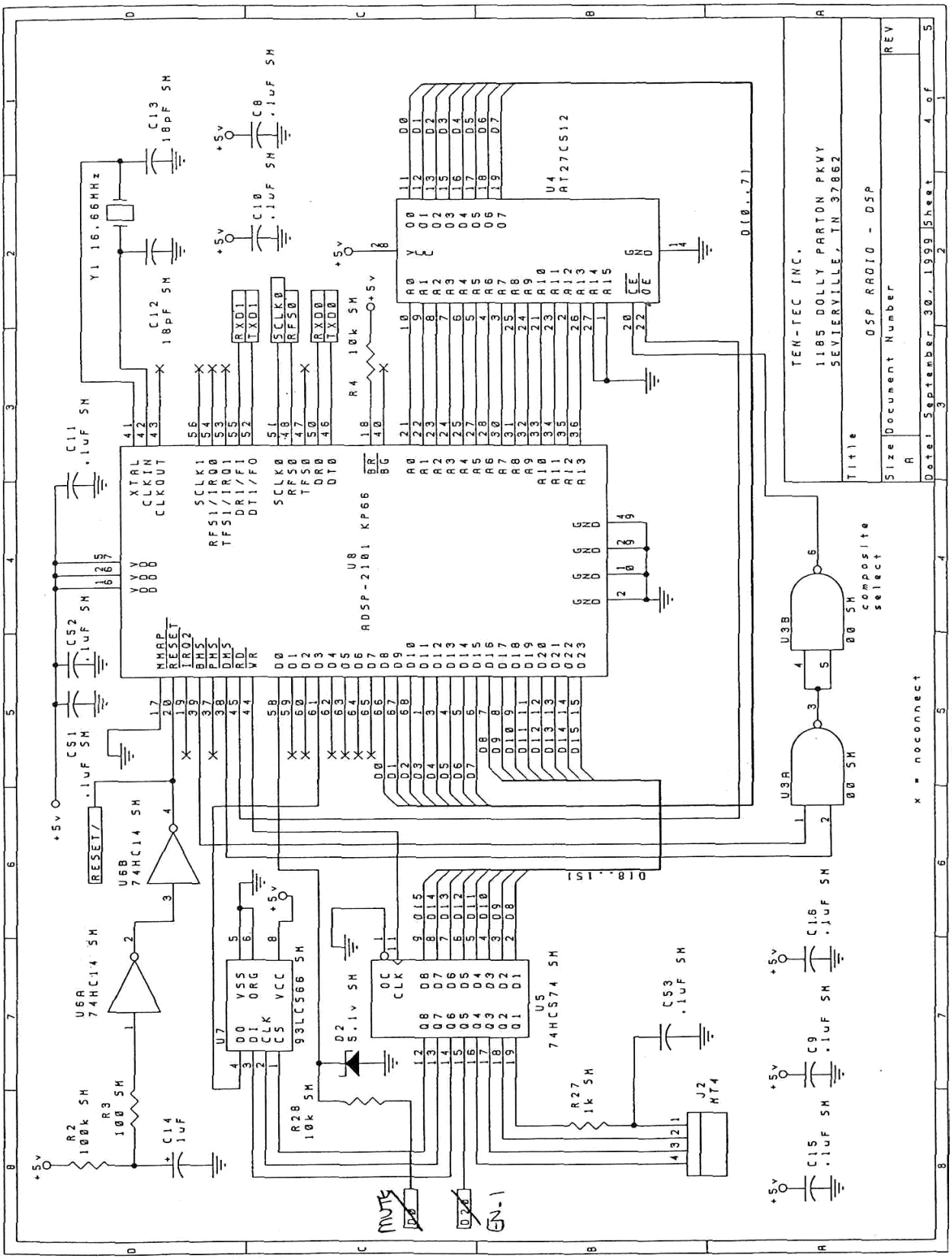
TEN-TEC INC.
1185 DOLLY PARTON PKWY
SEVIERVILLE, TN 37862
Title
OSP RADIO - DSP
Size
A
Document Number
REV
Date: September 30, 1999
Sheet
4 of
ADSP-2101 KP66
U8
AT27C512
U4
74HC14 SM
U6
74HC574 SM
U5
93LC56B SM
U7
Y1 16.66MHz
C13 18pF SM
C12 18pF SM
C8 .1uF SM
C10 .1uF SM
C11 .1uF SM
C52 .1uF SM
C51 .1uF SM
C53 .1uF SM
C16 .1uF SM
C9 .1uF SM
C15 .1uF SM
C14 1uF
R4 10k SM
R2 100k SM
R3 100 SM
R28 10k SM
R27 1k SM
D2 5.1v SM
J2 HT4
U3A 00 SM
U3B 00 SM
composite select
x = noconnect
RESET/
RXD1
TXD1
SCLK0
RFS0
RXD0
TXD0
D[0..7]
D[8..15]

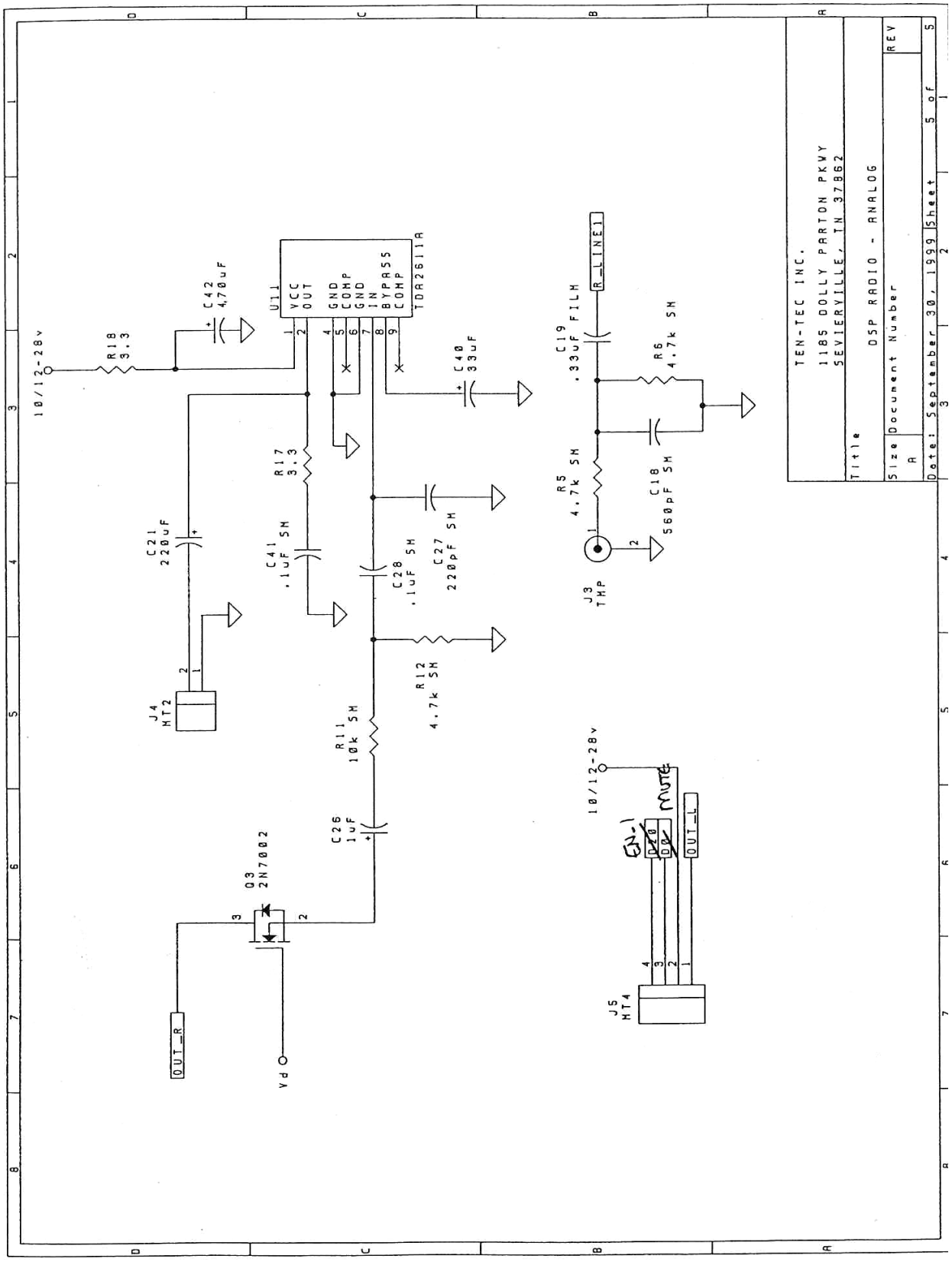
TEN-TEC INC.
1185 DOLLY PARTON PKWY
SEVIERVILLE, TN 37862
Title
DSP RADIO - ANALOG
Size
A
Document Number
REV
Date: September 30, 1999
Sheet 5 of 5
10/12-28v
R18
3.3
C42
4.70uF
U11
VCC
OUT
GND
COMP
GND
IN
BYPASS
COMP
TDA2611A
C40
33uF
R17
3.3
C21
220uF
C41
.1uF SM
C28
.1uF SM
C27
220pF SM
R12
4.7k SM
R11
10k SM
C26
1uF
Q3
2N7002
OUT_R
Vd
J4
MT2
R_LINE1
C19
.33uF FILM
R6
4.7k SM
R5
4.7k SM
C18
560pF SM
J3
TMP
10/12-28v
EN-1
MUTE
OUT_L
J5
MT4

APPENDIX 1

eBAY AUCTION TEXT

Ten-Tec RX-321 HF Receiver. DRM ready This receiver is the RX-321made by Ten-Tec, it is a custom version of the RX-320 PC Radio. It has also been modified professionally, to add 12 kHz DRM output at the remote jack. As mentioned it has been modified for DRM. The DRM pin has been professionally added to the 9-pin jack on the rear panel, see picture.

I am including the HF radio receiver, RX-321 and the small switching power supply that powers it. I have purchased several over the last few months and had them all modified. I am running 3 now, but just have a few spares. They really work great, I'm sure you'll be pleased with your purchase and the specifications are better than the RX-320's, as is the performance.

I am not providing any documentation with this radio. However, more information can be found at the ten-tec website:

`http://radio.tentec.com/Amateur/Receivers/TT320`

along with free software. There is also a users group at:

`http://groups.yahoo.com/group/RX320`

NOTE: This radio is similar to the RX-320D, not the older RX-320. It does have an IF output at the DB-9 connector (clearly marked, see picture) allowing for quick DRM functionality. You will have to get the proper software for DRM. The radio control software and programming manual for the RX-320 can be found at:

`http://radio.tentec.com/Amateur/Receivers/TT320/Downloads`

There are lots of shareware and free programs as well as some very nice professional programs available that will operate this radio. RX-320 vs. RX321: The RX-321 has the following physical differences from the RX320:

1. There is NO independent Line Out jack jack, however audio out is accessible through the "Remote" DB9 connector.

2. There is NO whip antenna provision. (Almost useless anyhow, a real antenna should always be used.)

3. An antenna is required via the UHF connector, not a cheap RCA type connector, as on the Rx-320.

The RX-321 has the following Performance Improvements:

1. Improved oscillator w/ +-10 Hz frequency stability. (0 to 40 C).

2. 2nd order intercept +60 dBm. 3. 3rd order intercept +15 dBm. If you want a more complete list of RX-320 Specifications (not true RX-321 Spec?s) visit:

http://radio.tentec.com/Amateur/Receivers/TT320

"Remote" Connector Pinout: Pin 1 Line audio 600 Ohm Pin 2 Line audio 600 Ohm Pin 3 12Khz IF Pin 4 Ground Pin 6 Line audio (center tap) Pin 9 Ground.

Please note that Ten-Tec does not provide customer support for the RX-321, since it was a custom radio made for Global Wireless. This is a surplus radio and they are in very good condition.

Cash, Certified Bank Check or U.S. Postal Money Order only. U.S. Orders only. A fixed shipping/Insurance charge will be $20.00 via U.S. Post Office Insurance value will be for the full winning amount. It will be carefully wrapped and shipped with 2 days of receipt of payment. Thanks for looking, you?ll really enjoy this radio and Good luck.

APPENDIX 2

REVIEWS

Eham reviews of the RX321:

Reviews Summary for Ten-Tec RX-321 (Globe Wireless)

Ten-Tec RX-321 (Globe Wireless) Reviews: 7 Average rating: 5.0/5
MSRP: $(missing?add MSRP <http://www.eham.net/reviews/edit/4999?item=MSRP>)
Description: Computer controlled HF receiver
More info: http://

You can write your own review
<http://www.eham.net/reviews/addreview/4999> of the Ten-Tec RX-321
(Globe Wireless).

N1LF <http://www.eham.net/user/profile/N1LF> Rating: 5/5 Apr 22, 2006
10:57 Send this review to a friend
<http://www.eham.net/reviews/mailto/48113>
Great value! Time owned: more than 12 months
I use this receiver primarily for MW DXing, and find that the RX-321 compares very favorably to my Drake R8B, and my Icom 746Pro for this purpose.

Connections are simple. 50 Ohm Antenna, Ground, 12 Volt DC, serial cable for the PC, and a shielded audio cable that runs to your soundcard.

Lots of software, (freeware and otherwise) available...virtually anything that works with the RX-320 works fine with the RX-321.

Best features? Lots of bandwidth options, Passband tuning...etc. I also often feed the 8khz wide audio signal to the DReaM software, which requires a 14khz IF signal, but works fine using the 8khz wide audio signal as an IF...this then allows you to customize any filter shape and see the spectrum. Amazing combination for MW DXing, at a very affordable price.

If you're serious about MW DXing and on a budget, you'll find it hard to beat the RX-321. Also use it to monitor secondary frequencies during Hurricane Season, and it works great as a SW-HF receiver too.

SWL377 <http://www.eham.net/user/profile/SWL377> Rating: 5/5 Aug 2, 2005 10:32 Send this review to a friend <http://www.eham.net/reviews/mailto/41543>
Great rcvr but a Ten Tec orphan Time owned: 0 to 3 months
I own both a Ten Tec 320 and, finally succumbing to the chat group pressure, a 321. The 321 has considerably better front end and freq stability specs than the 320, but I have yet to see any real world difference in performance. Maybe in a strong signal environment the 321 would outshine the 320, but at my location they seem to be about the same performance wise. Remember if you buy a 321 you are on your own, Ten Tec will NOT service them or even answer any questions about them. The otherwise nice folks at Ten Tec snarl and snap if you even ask about support for non standard radios like the SP 325 they made for the US Navy (yes, I have one of these too).

Globe Wireless apparently had the 321 custom engineered by Ten Tec as the heart of a GMDSS rcvr system that as far as I can tell never made it to market. My guess is that there were less than 100 of these made.

Do I enjoy using my 321? Well, actually not so much. I just don't like the computer user interface. I like knobs and switches. There are some aftermkt knob and switch kits for these rcvrs, but they still don't give you the feel of a full panel of knobs like you'd find on an old Hammarlund or Hallicrafters.

Should you buy a 320 or a 321? If you are worried about service, get a 320 definitely. If you must have the better specs in a 320-like radio and are willing to risk breakdowns without any service availability, then get a 321. Both are fine rcvrs and truly AMAZING values when you examine price vs performance. Nothing else comes close, not even the Sony 2010 which for years was the value leader.

Either the 320 or 321 will outperform non DSP rcvrs costing perhaps ten times their price. Would a 321 stand up against the holy Collins R 390 A? Don't know. Synthesizer noise in the 321 could be an issue, but the DSP magic might gain back the advantage lost by the synth. Would be an interesting SW rcvr shootout indeed.

VA3TY <http://www.eham.net/user/profile/VA3TY> Rating: 5/5 Jul 16, 2005 06:16 Send this review to a friend <http://www.eham.net/reviews/mailto/41132>
Excellent commercial upgrade to the TenTec RX-320 Time owned: 6 to 12 months
Globe Wireless had the specifications of the RX-320, with which I already owned and am quite pleased, upgraded for maritime use.

-Frequency stability is rock steady. Accuracy is ALWAYS within a hertz or two of WWV/CHU Standards. This is due to the temperature compensated crystal oscillator (TCXO). (Hint, you can use this receiver to align your other equipment in the shack)

-Sensitivity has been improved from the already great RX-320 model from which it was modified. Actually the sensitivity is most likely the same as the RX-320, but because of better front end design, the receiver doesn't suffer from desensing due to nearby strong signals.

-Automatic Pre-Selectors prevent out of band blow-through of very strong locals.

If you see this radio come up on eBay for the same of less price of a new RX-320, buy it!

KC0PPA <http://www.eham.net/user/profile/KC0PPA> Rating: 5/5 May 1, 2005 23:18 Send this review to a friend <http://www.eham.net/reviews/mailto/39319>
The software makes it. Time owned: 0 to 3 months
I found out that the RX-321 is as good or better than my Drake R-8. What makes the computer controled RX-321 great is the control software. I have been trying many of the programs out there. I have not decided on the best one yet. Each has it pluses ond minues.
I like the ability to download the station lists from the internet. From this you can quite easily id or find a station. The way you can run down the list one by one is a nice way to see whats on. The band scan function lets you see at a glance what is on that band. It is also easy to make your own list. With the ability to make more than one list it is like having unlimited memories. Just a click of a button and it is added. Many regular radios have this function. But with the list on on the software it is much easier to pull up.
Like I told a fellow radio friend, "It is better then sliced bread"

It got my interest back into the shortwave hobby.

TUBESAREKING <http://www.eham.net/user/profile/TUBESAREKING> Rating: 5/5 Apr 21, 2005 07:14 Send this review to a friend <http://www.eham.net/reviews/mailto/39023>
Superb Time owned: 0 to 3 months
Just bought this for $220 US on eBay. The seller was 1st class all the way. The product is spectacular.

I'm using it with a 1996 era Toshiba laptop [Pentium 1]running Windows 98 and that ancient combo works just fine with this hi-tech black box receiver.

Sensitivity is the equal or better to my Drake R8. Selectivity is much better on the Ten-Tec than the Drake. The RX-321 can handle my two local MW 10KWers even with my 70 foot V antenna, 6 foot ground rod, and SWL1G balun. The poor Drake gets images of these stations everywhere unless I really pad the antenna down.

Audio quality is very good at 8 KHz BW. For DX, there is a wide choice of narrower BWs to choose from.

I am primarily a MW DXer, and was pleased to see that it pulled in 530 KHz from the Turks and Caicos solidly and free of noise. The Drake pulled in the same station but with moderate background noise.

A local beacon prevents reception of Ireland on 252 KHz on the Drake, no matter how much you use BW options, USB/LSB, PBT etc. Simply impossible. With the Ten-Tec RX-321, all you do is choose the 3.1 KHz BW and presto, Ireland 252 coming in clear as a bell.

France 1377 - audible but noisy on the Drake. Noise free on the Ten-Tec. the Ten-Tec is great for TA MW DX.

The Ten-Tec RX-321 is simply the best LW, MW, SW receiver I have ever experienced. Period.

It looks like the last of these may be gone. Perhaps Ten-Tec will introduce this for regular sale. It is a winner. Since it was a custom project, they may have to revise it somewhat for regular sale, but it is a winner. Just add the Ten-Tec logo to the front, and a 12 KHz IF output jack to the back, call it the RX-321D and watch the orders roll in.

Clearly superior to the Drake R8. That is not to knock the Drake, which in my opinion is a very good receiver. It is just that Ten-Tec has made a PC based black box which runs circles around virtually anything else. The Drake R8 family is very high end consumer grade. The Ten-Tec RX-321 is commercial/military grade.

The Ten-Tec has a real case, unlike the thin material on the Drake.

The only thing it lacks is the "feel" of a conventional receiver.

Kudos Ten-Tec!

Prince Edward Island Canada

K8SWL <http://www.eham.net/user/profile/K8SWL> Rating: 5/5 Mar 20, 2005 16:04 Send this review to a friend <http://www.eham.net/reviews/mailto/38257>
Great Receiver Time owned: months
Having had an RX-320 for about 6 years, I didn't hesitate to buy an RX-321 for $200. I wasn't worried about factory service as the RX-321 has been running without shutting sdown since new without a failure. The RX-321 has more stability and a much stronger front end compared to the RX-320. An outstanding receiver.

K6YC <http://www.eham.net/user/profile/K6YC> Rating: 5/5 Mar 12, 2005 21:39 Send this review to a friend <http://www.eham.net/reviews/mailto/38033>
Excellent Receiver Time owned: 0 to 3 months
This is a custom version of the Ten-Tec RX-320 made for Global Wireless. It is functionally very similar to the RX-320 and uses the same control interface software. The receiver is very sensitive and very good in a high RF level environment. I modified mine to bring the 12 Khz IF out for my DRM demodulator. The DSP works great and the frequency is dead on. I picked this receiver up on e-Bay for $200 and it is a great buy. There is no tech support for these from either Ten-Tec or Globe Wireless but it is well made and should last for a long time.

APPENDIX 3

TOYS

Griffin Powermate

<http://www.griffintechnology.com/products/powermate/>

USB knob

RX321 DRM modification

<http://www.g7ltt.com/drm/rx321mods/index.htm>

APPENDIX 4

USER GROUPS

These groups support the RX320 & RX321

Subscribe to Yahoo RxPlus Users Group

* <http://groups.yahoo.com/group/RxPlus/join>*

Subscribe to Yahoo RX320 Users Group

* <http://groups.yahoo.com/group/RX320/join>*

Yahoo group for Shortwave Log <http://groups.yahoo.com/group/swlog_users/>

Yahoo group for TRX Manager <http://groups.yahoo.com/group/TRX-Manager/>

Yahoo group for N4PY software <http://groups.yahoo.com/group/n4pysoftware/>

Yahoo group for Ergo <http://groups.yahoo.com/group/ergoradio/>

Yahoo group for Bonito Radiocom <http://groups.yahoo.com/group/RadioCom/>

Yahoo group for Callsign software <http://groups.yahoo.com/group/CallSignSoftware-Support/>

Yahoo group for Dxtra Worldstation <http://groups.yahoo.com/group/worldstation/>

Yahoo group for Frequency Manager <http://groups.yahoo.com/group/frequencymanager/>