Downloaded by
RadioAmateur.EU

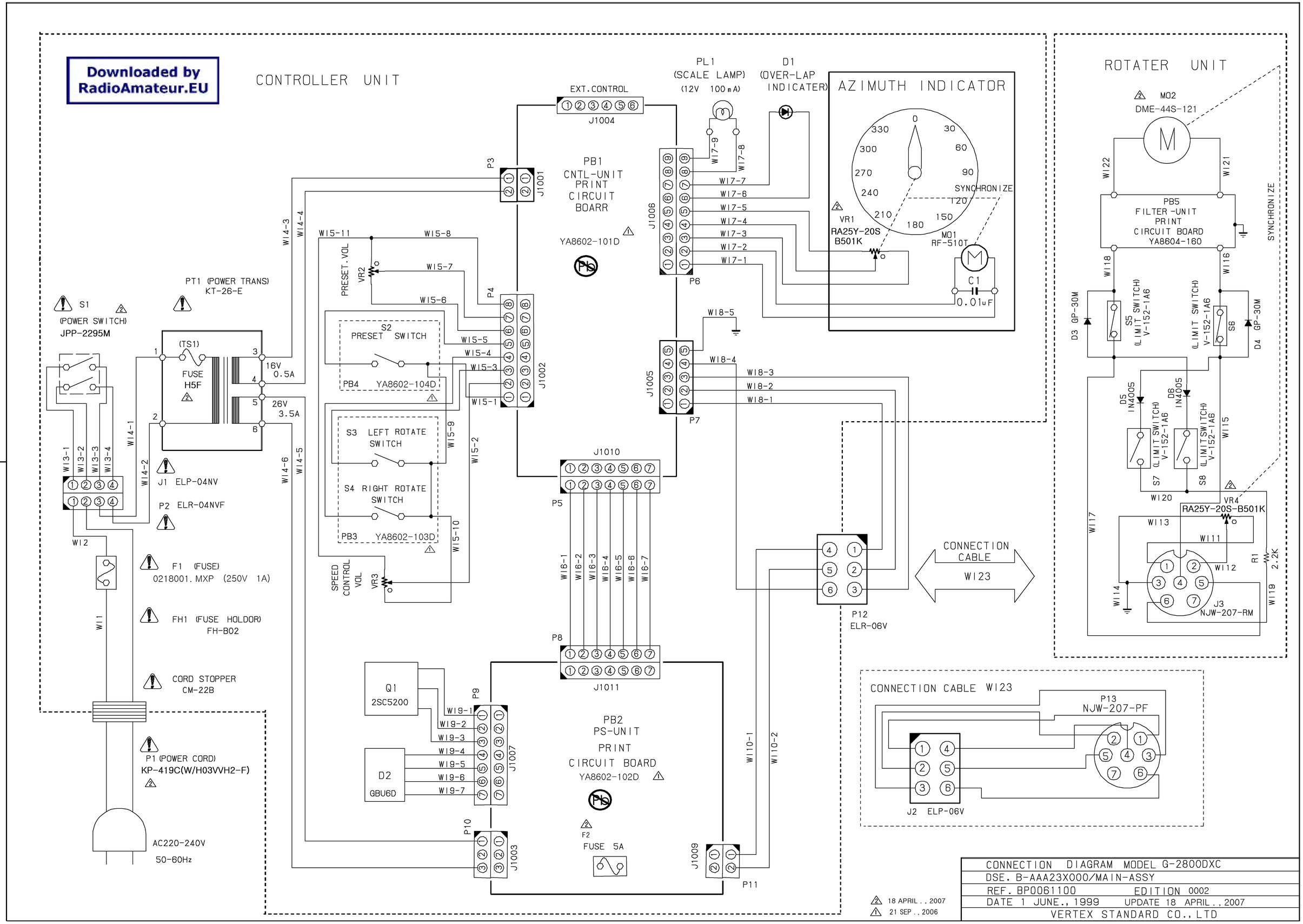

CONNECTION DIAGRAM MODEL G-2800DXC	
DSE. B-AAA23X000/MAIN-ASSY	
REF. BP0061100	EDITION 0002
DATE 1 JUNE., 1999	UPDATE 18 APRIL., 2007
VERTEX STANDARD CO., LTD	

2 18 APRIL., 2007
1 21 SEP., 2006

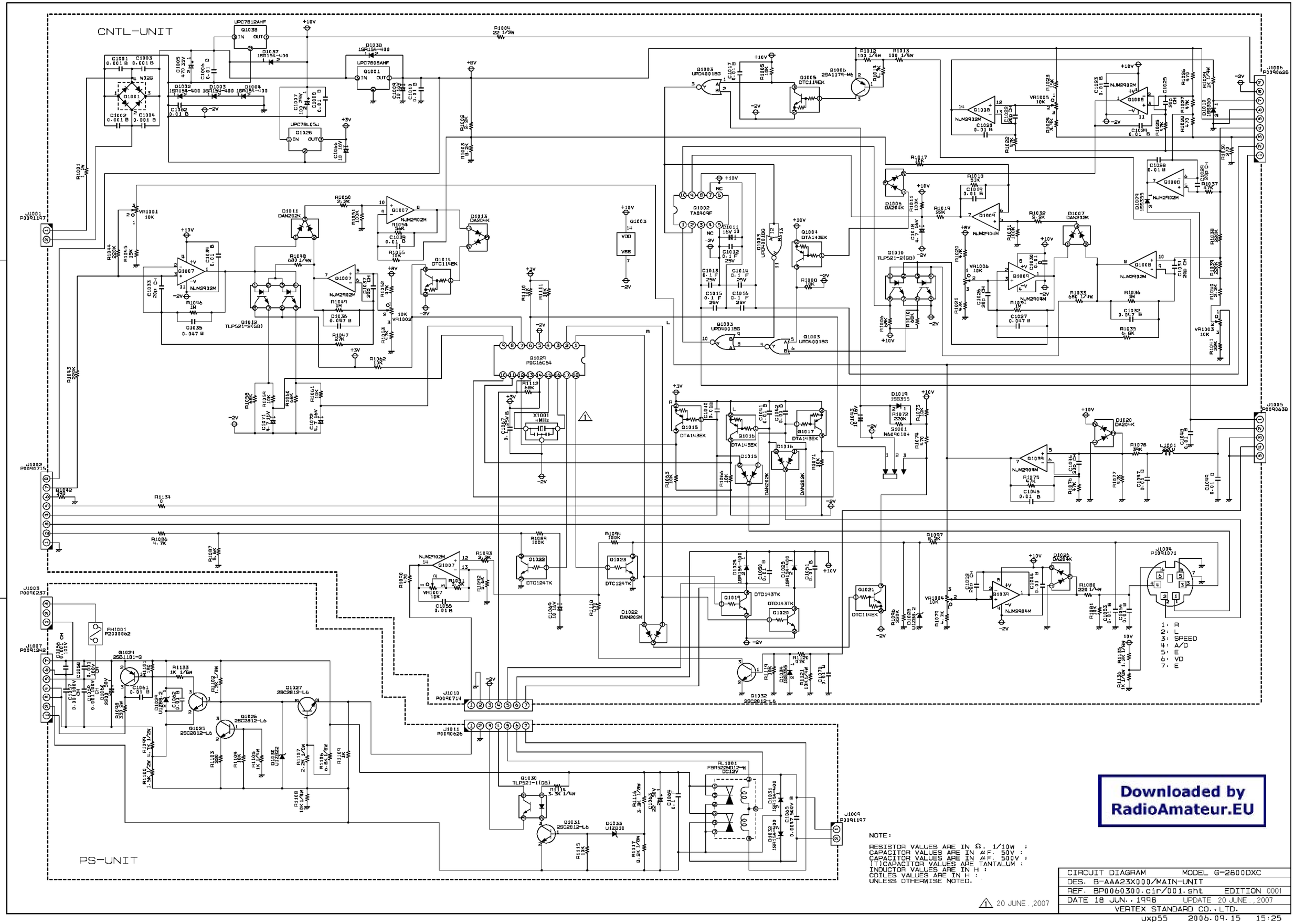

Downloaded by RadioAmateur.EU