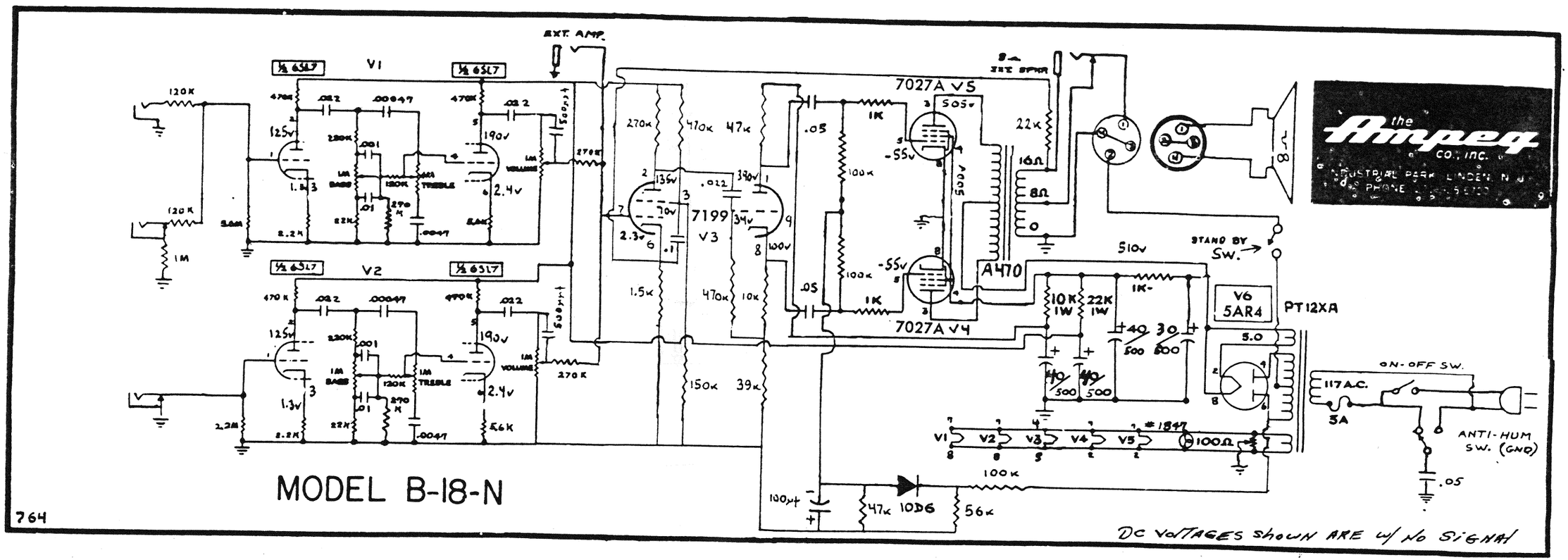
MODEL B-18-N
764
DC VOLTAGES SHOWN ARE w/ NO SIGNAL
the Ampeg CO., INC.
INDUSTRIAL PARK LINDEN N.J.
PHONE
½ 6SL7
V1
V2
½ 6SC7
EXT. AMP.
7199
V3
7027A V5
7027A V4
A470
PT12XA
V6
5AR4
STAND BY SW.
ON-OFF SW.
117 A.C.
3A
ANTI-HUM SW. (GND)
1D6
8Ω