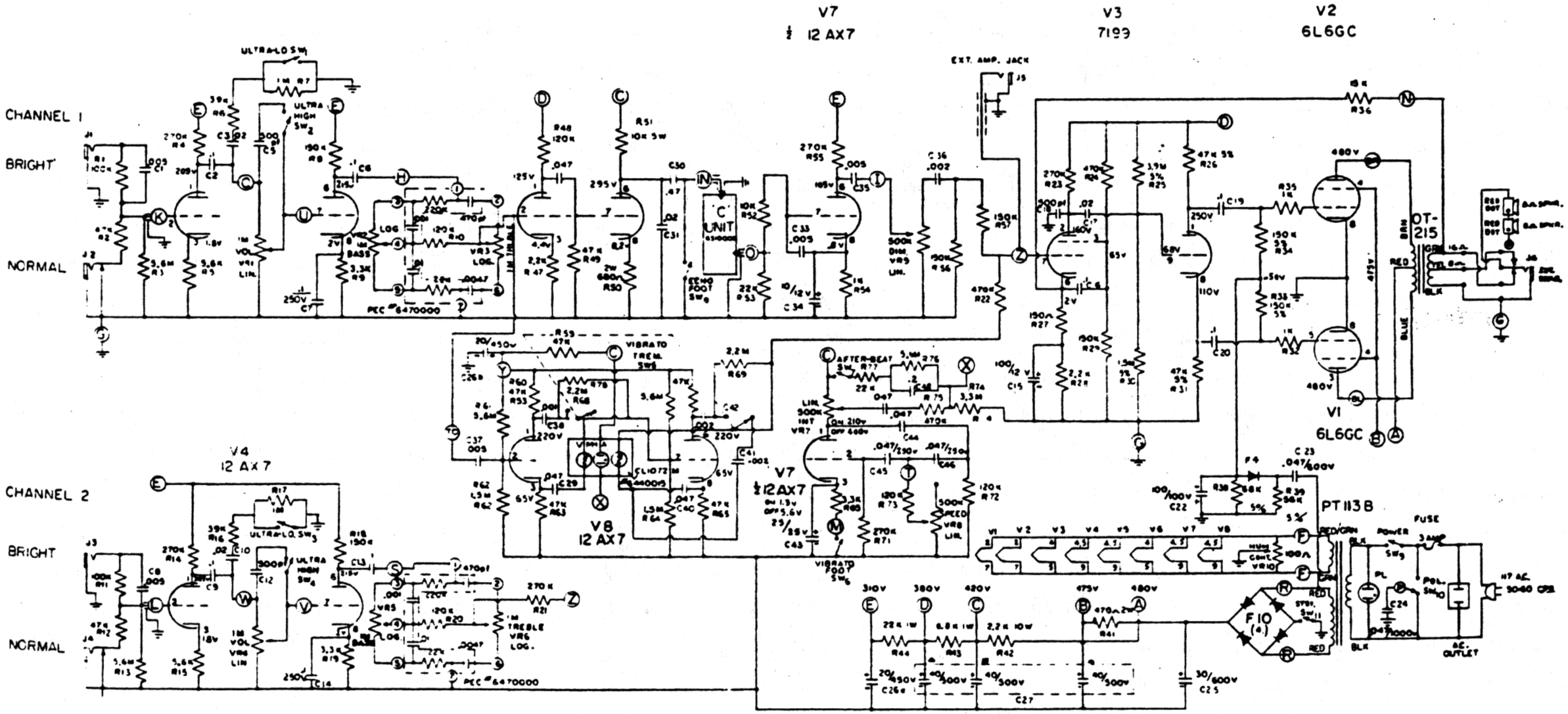

Ampeg Model GV22

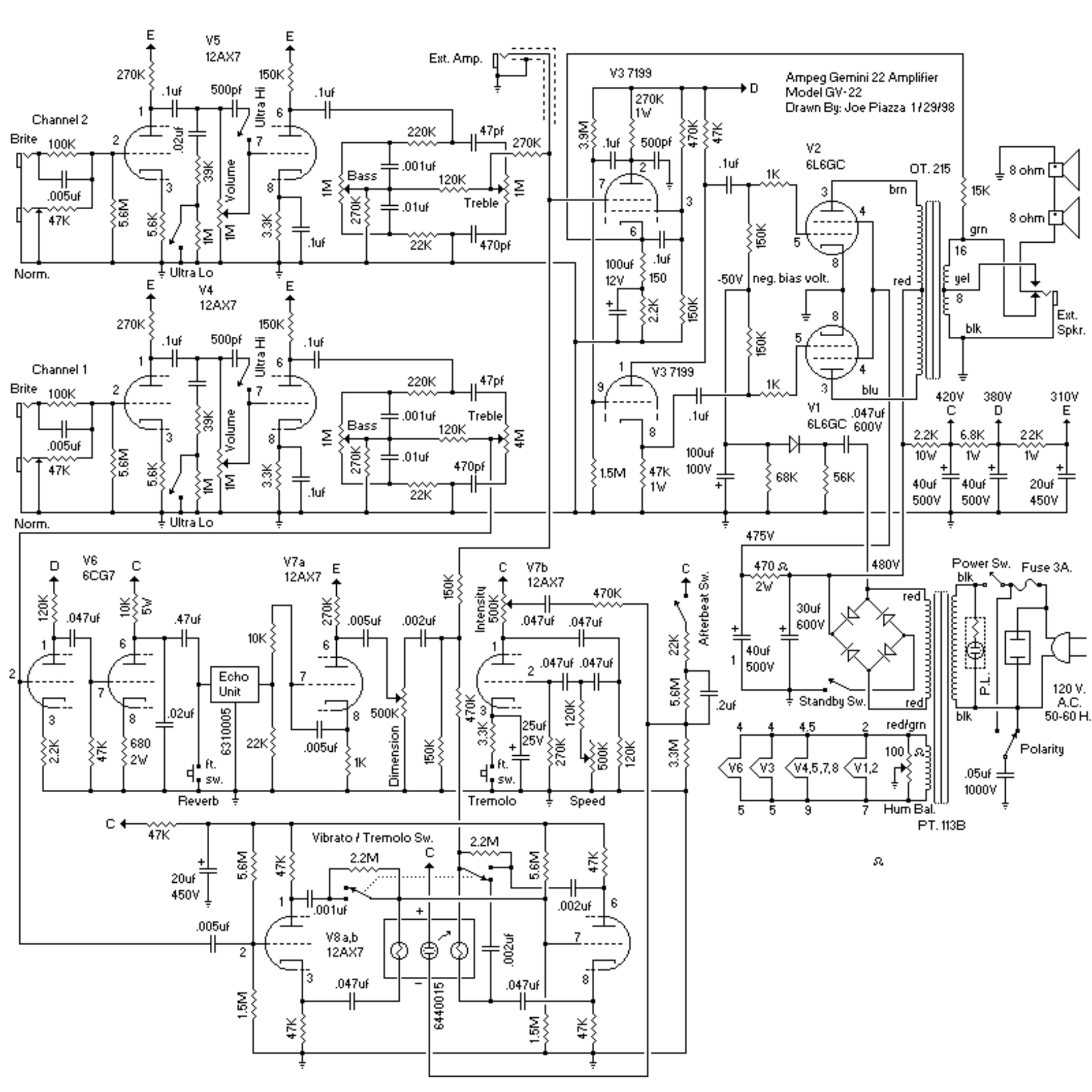
Ampeg Gemini 22 Amplifier
Model GV-22
Drawn By: Joe Piazza 1/29/98
V5
12AX7
V4
12AX7
Channel 2
Channel 1
Brite
Norm.
Ultra Hi
Ultra Lo
Volume
Bass
Treble
Ext. Amp.
V3 7199
V2
6L6GC
V1
6L6GC
OT. 215
8 ohm
Ext. Spkr.
neg. bias volt.
-50V
420V
380V
310V
475V
480V
V6
6CG7
V7a
12AX7
V7b
12AX7
Echo Unit
6310005
Intensity
Dimension
Afterbeat Sw.
Standby Sw.
Power Sw.
Fuse 3A.
120 V. A.C. 50-60 H.
Polarity
Hum Bal.
PT. 113B
Reverb
Tremolo
Speed
Vibrato / Tremolo Sw.
V8 a,b
12AX7
6440015