SS-70 PREAMP PC BOARD ASSY# 07-510-01

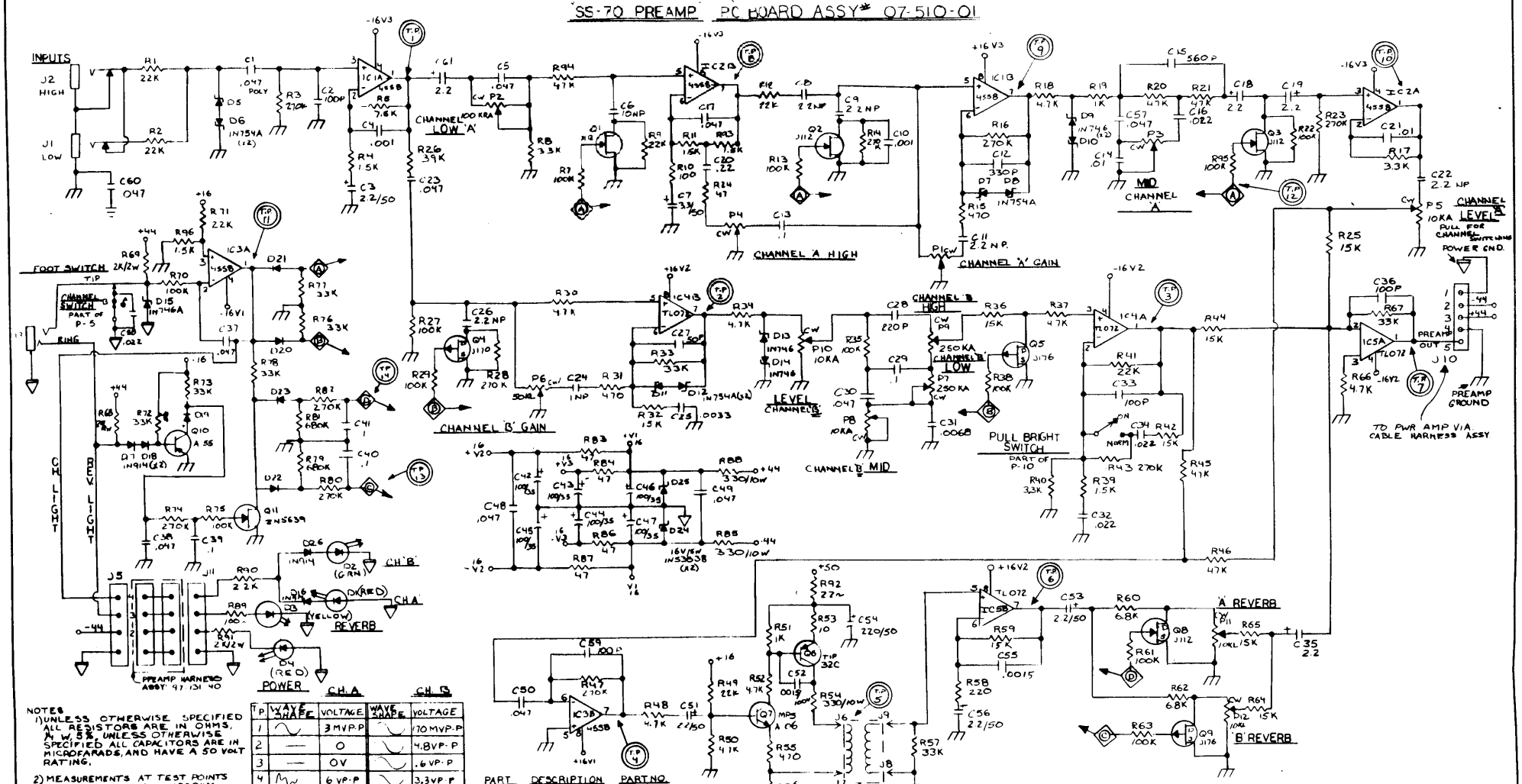

NOTES

1) UNLESS OTHERWISE SPECIFIED ALL RESISTORS ARE IN OHMS, ¼ W, 5%, UNLESS OTHERWISE SPECIFIED ALL CAPACITORS ARE IN MICROFARADS, AND HAVE A 50 VOLT RATING.

2) MEASUREMENTS AT TEST POINTS ARE MADE WITH A 1 MEGOHM INPUT OSCILLOSCOPE

CHANNEL 'A'
GAIN, LEVEL @ 10
ULTRA MID, LOW, HIGH @ 5

CHANNEL 'B'
GAIN, LEVEL @ 10
TONES @ 5
BRIGHT BOOST OFF

T.P.	CH. A WAVE SHAPE	CH. A VOLTAGE	CH. B WAVE SHAPE	CH. B VOLTAGE
1	∿	3 MVP-P	∿	170 MVP-P
2	—	0	∿	4.8 VP-P
3	—	0V	∿	.6 VP-P
4	∿	6 VP-P	∿	3.3 VP-P
5	∿	15 VP-P	∿	4.5 VP-P
6	∿	1.2 VP-P	∿	55 MVP-P
7	∿	2.5 VP-P	∿	1.3 VP-P
8	∿	60 MV	—	0V
9	∿	11 VP-P	—	0V
10	∿	1.1 VP-P	—	0V
11	—	-14 VDC	—	14 VDC
12	—	-13V DC	—	0V
13	—	0V	—	12 VDC
14	—	-12V DC	—	0VDC

PART	DESCRIPTION	PART NO.
IC1	4558	37-458-01
IC2	4558	37-458-01
IC3	4558	37-458-01
IC4	TL072	37-072-01
IC5	TL072	37-072-01
J1	¼ CLIFF	39-116-01
J2	"	39-116-01
J3	"	39-117-01
J4	5 PIN HD	17-309-05
J5	4 PIN HD	17-310-04
J6-9	.187 TAB	17-894-01
J10	4 PIN HD	17-310-01
J11	#6 LUG	17-500-01
H.S.	TO-220 H.S.	33-541-01

PART	DESCRIPTION	PART NO.
P1	100 KRA	70-104-23
P2	100 KRA	70-104-23
P3	50 KA	70-503-22
P4	50 KRA	70-503-23
P5	10 KA w/SWITCH	70-103-28
P6	50 KL	70-133-01
P7	250 KA	70-254-22
P8	10 KA	70-103-22
P9	250 KA	70-254-22
P10	10 KA w/SWITCH	70-103-28
P11	10 KL	70-132-01
P12	10 KL	70-132-01

PART	DESCRIPTION	PART NO.
Q1	J112	96-112-01
Q2	J112	96-112-01
Q3	J112	96-112-01
Q4	J176	96-176-01
Q5	J176	96-176-01
Q6	TIP 32C	96-032-03
Q7	MPSA06	96-006-01
Q8	J112	96-112-01
Q9	J176	96-176-01
Q10	MPSA55	96-055-01
Q11	J112	96-112-01

PCB# 07-510-01 SHT 1 of 2

AMPEG SS-70 PREAMP

SLM ELECTRONICS
HARD BORMAN ST LOUIS MO 63146

TOLERANCES	REVISIONS NO.	DATE	BY
DECIMAL	4	4-15-87	TJC
FRACTIONAL	10	10/24/87	JV
ANGULAR	11	5-8-87	DEF

DRAWN BY TJC
CHK'D
TRACED
SCALE
DATE 4-15-87
MATERIAL
DRAWING NO. 16-035-01 1 of 2