SVT **POWER AMP (REV F)**

Ampeg

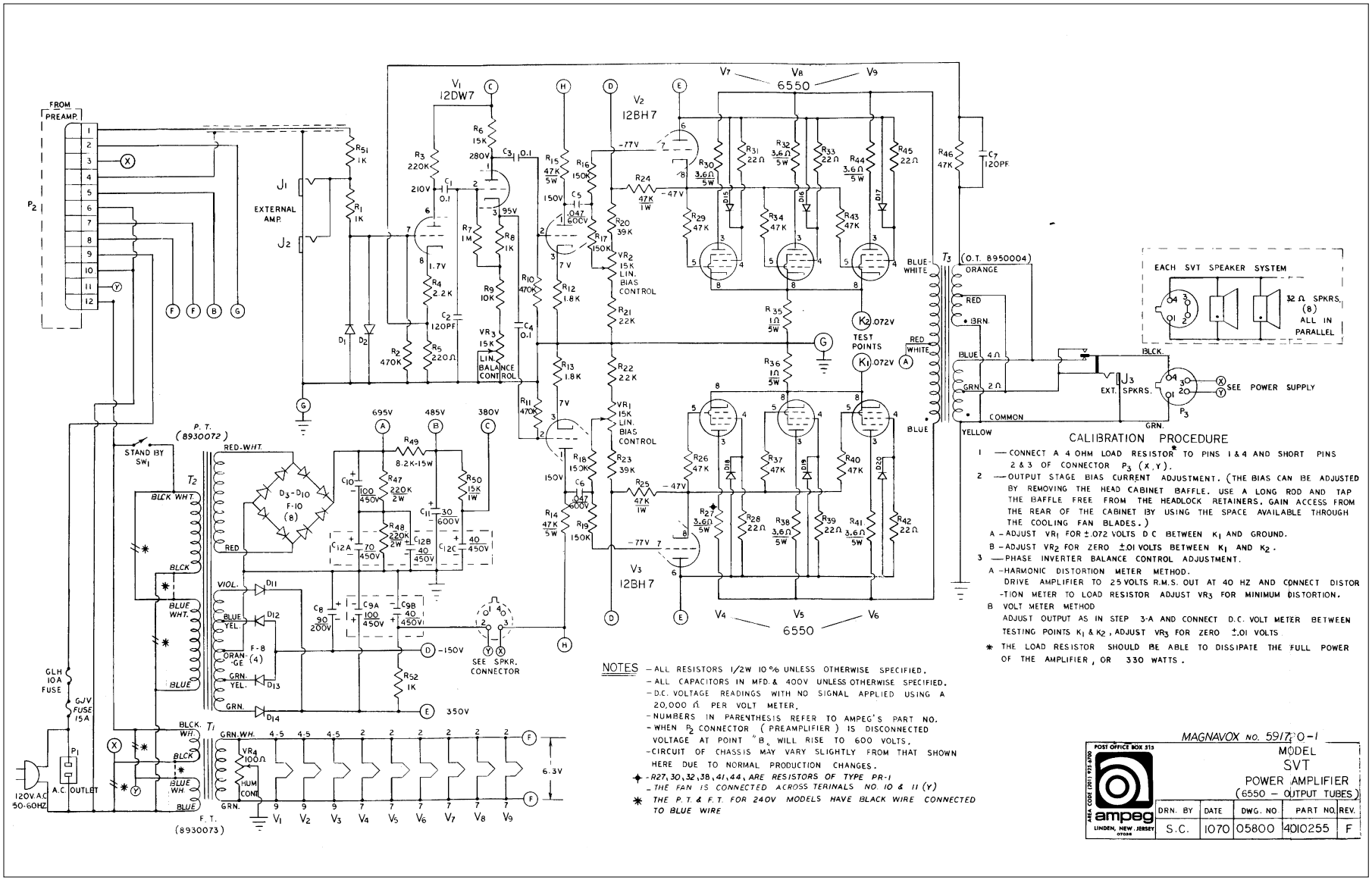

NOTES
- ALL RESISTORS 1/2W 10% UNLESS OTHERWISE SPECIFIED.
- ALL CAPACITORS IN MFD. & 400V UNLESS OTHERWISE SPECIFIED.
- D.C. VOLTAGE READINGS WITH NO SIGNAL APPLIED USING A 20,000 Ω PER VOLT METER.
- NUMBERS IN PARENTHESIS REFER TO AMPEG'S PART NO.
- WHEN P_2 CONNECTOR (PREAMPLIFIER) IS DISCONNECTED VOLTAGE AT POINT "B" WILL RISE TO 600 VOLTS.
- CIRCUIT OF CHASSIS MAY VARY SLIGHTLY FROM THAT SHOWN HERE DUE TO NORMAL PRODUCTION CHANGES.

✦ - R27, 30, 32, 38, 41, 44, ARE RESISTORS OF TYPE PR-1
- THE FAN IS CONNECTED ACROSS TERINALS NO. 10 & 11 (Y)

✱ THE P.T. & F.T. FOR 240V MODELS HAVE BLACK WIRE CONNECTED TO BLUE WIRE

CALIBRATION PROCEDURE

1 — CONNECT A 4 OHM LOAD RESISTOR✱ TO PINS 1 & 4 AND SHORT PINS 2 & 3 OF CONNECTOR P_3 (X, Y).

2 — OUTPUT STAGE BIAS CURRENT ADJUSTMENT. (THE BIAS CAN BE ADJUSTED BY REMOVING THE HEAD CABINET BAFFLE. USE A LONG ROD AND TAP THE BAFFLE FREE FROM THE HEADLOCK RETAINERS. GAIN ACCESS FROM THE REAR OF THE CABINET BY USING THE SPACE AVAILABLE THROUGH THE COOLING FAN BLADES.)

A - ADJUST VR_1 FOR ±.072 VOLTS D C BETWEEN K_1 AND GROUND.

B - ADJUST VR_2 FOR ZERO ±.01 VOLTS BETWEEN K_1 AND K_2.

3 — PHASE INVERTER BALANCE CONTROL ADJUSTMENT.

A - HARMONIC DISTORTION METER METHOD.
DRIVE AMPLIFIER TO 25 VOLTS R.M.S. OUT AT 40 HZ AND CONNECT DISTORTION METER TO LOAD RESISTOR ADJUST VR_3 FOR MINIMUM DISTORTION.

B VOLT METER METHOD
ADJUST OUTPUT AS IN STEP 3-A AND CONNECT D.C. VOLT METER BETWEEN TESTING POINTS K_1 & K_2, ADJUST VR_3 FOR ZERO ±.01 VOLTS.

✱ THE LOAD RESISTOR SHOULD BE ABLE TO DISSIPATE THE FULL POWER OF THE AMPLIFIER, OR 330 WATTS.

MAGNAVOX NO. 5917-0-1

POST OFFICE BOX 515 — AREA CODE (201) 925-8700 — ampeg — LINDEN, NEW JERSEY 07036

MODEL SVT POWER AMPLIFIER (6550 – OUTPUT TUBES)

DRN. BY	DATE	DWG. NO	PART NO.	REV.
S.C.	1070	05800	4010255	F