BOSS CS-1 SERVICE NOTES

SPECIFICATIONS

Power	Battery DC9V (1) AC Adaptor
Current draw	DC9V, 5mA
Control	Sustain, Level, Mode
Others	Normal/Effect Changeover Switch, Battery Check Lamp
Jack	Input, Output, AC Adaptor
Equivalent input noise	–100dB
Maximum input	+5dB
Maximum output	–10dB
Compression Range	60dB
Output load impedance	Over 10KΩ
Dimensions	70(W) x 55(H) x 125(D)mm
Weight	400g

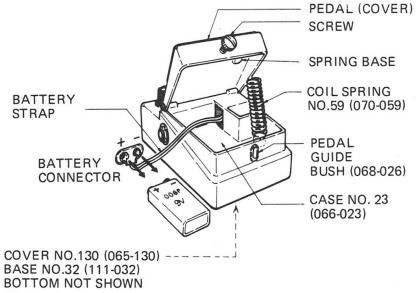

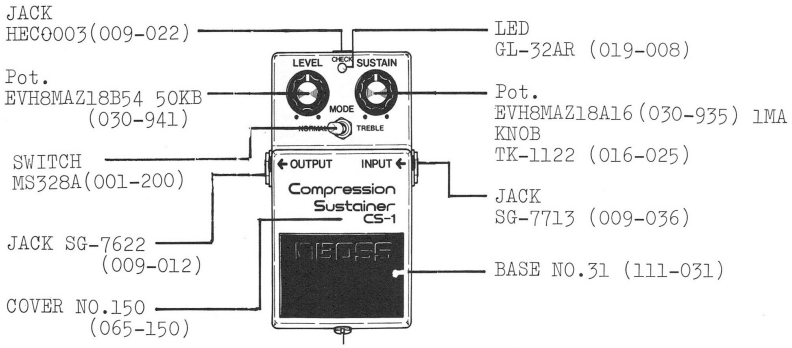

ORNAMENTAL SCREW 3x10mm

PARTS LIST

066-023	Case no.23 (blu)	
065-150	Cover no.150 (blu)	
065-130	Cover no.130 bottom	
111-031	Base no.31 pedal matt	
111-032	Base no.32 bottom	
068-026	Guide Bushing no.26	
064-151	Holder no.151 washer LED	
107-053	Cushion no.53 PCB	
065-153	Cover no.153 PCB	
070-059	Spring no.59 coil	
016-025	Knob TK-1122	
	POTENTIOMETERS	
030-935	EVH8MAZ18A16 1MA	
030-941	EVH8MAZ18B54 50KB	
009-022	Jack HEC-0003	
009-012	Jack SG-7622	
009-036	Jack SG-7713	
001-200	Switch MS-328A(wht)	
001-191	Switch J-P5005 or JM0400#1	

151-030B	PCB ET-30B	assy
052-288B	PCB ET-30B	less parts
	SEMICONDUCTORS	
017-110	2SC1815-Y transistor	
017-014	2SK30ATM-Y	FET
017-091	2SK30ATM-O	FET
018-059	1S1588	diode
018-038	RD4.7EB	zener
018-039	RD11EB	zener
018-075	RD5.1EB (05Z5.1L)	zener
019-008	GL-32AR	LED
019-006	P873G35-380	P.C
020-027	TA7136P	IC
	CAPACITORS	
032-092	0.15uF 35V	tantalum
032-099	1uF 35V	tantalum

SUS-TAIN	INPUT Signal Sine		OUTPUT Level Mode NORMAL	OUTPUT Level Mode TREBLE
			less than	
Max	1kHz	+10dBm	-5dBm	-5dBm
		0dBm	-8dBm	-7.5dBm
		-20dBm	-10dBm	-10.5dBm
		-40dBm	-11dBm	-11dBm
Min		-40dBm	-30dBm	-24dBm
Max	100Hz	-55dBm	-17dBm	-29dBm
Max	2kHz	-55dBm	-20dBm	-12dBm
			Acceptable tolerance ±3dB	
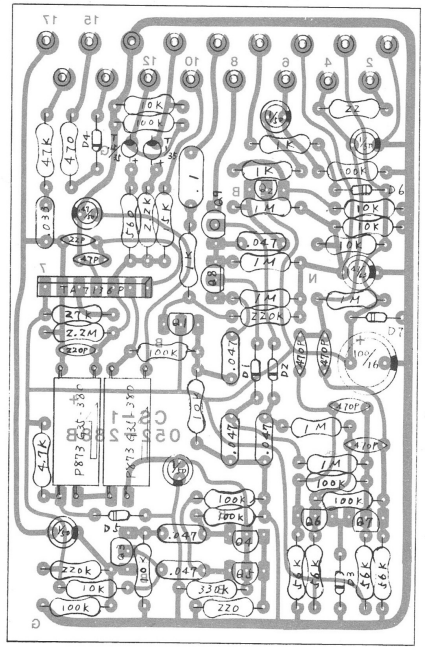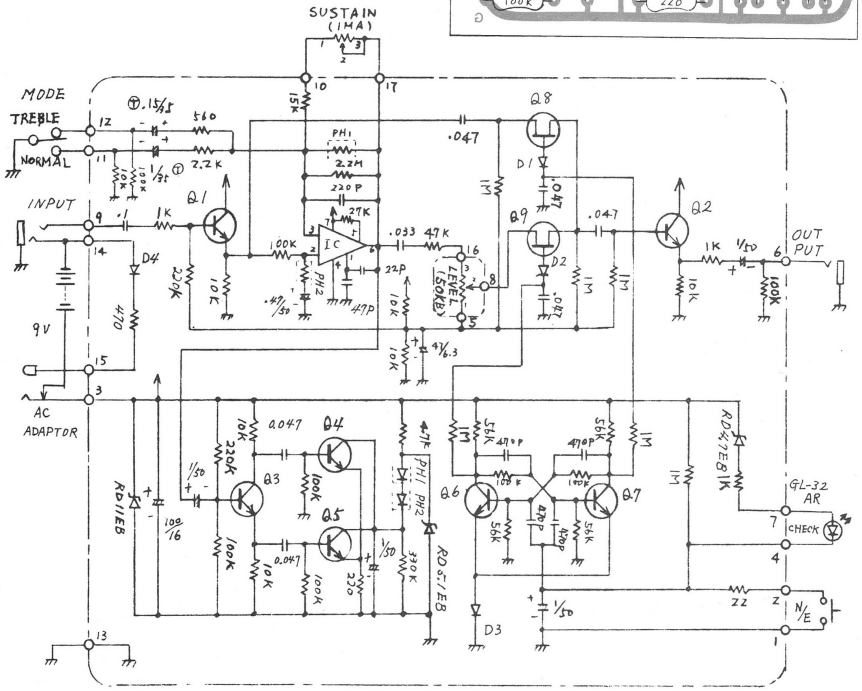
ET-30B (151-030B)