CARVIN	12340 World Trade Drive San Diego, CA 92128 (858) 487-1600 FAX 487-6629
DCM2500/2000	
DRAWN BY: GEORGE DREYER	DATE: 4 FEB 2003
APPROVED:	DATE:
PCB NO: 30-02500	REV: B
ASSY. NO: 80-02500	REV: A
REVISED BY: GEORGE DREYER	DATE: 12MAR2003

CHANGES FROM REV A TO B

1. drill hole correction on PCB

4. ADDED AS SECONDARY OPERATION.
3. ALL DIODES ARE TYPE 1N4003, EXCEPT AS NOTED.
2. ALL CAPACITORS IN MICORFARADS, EXCEPT AS NOTED.
1. ALL RESISTORS IN OHMS
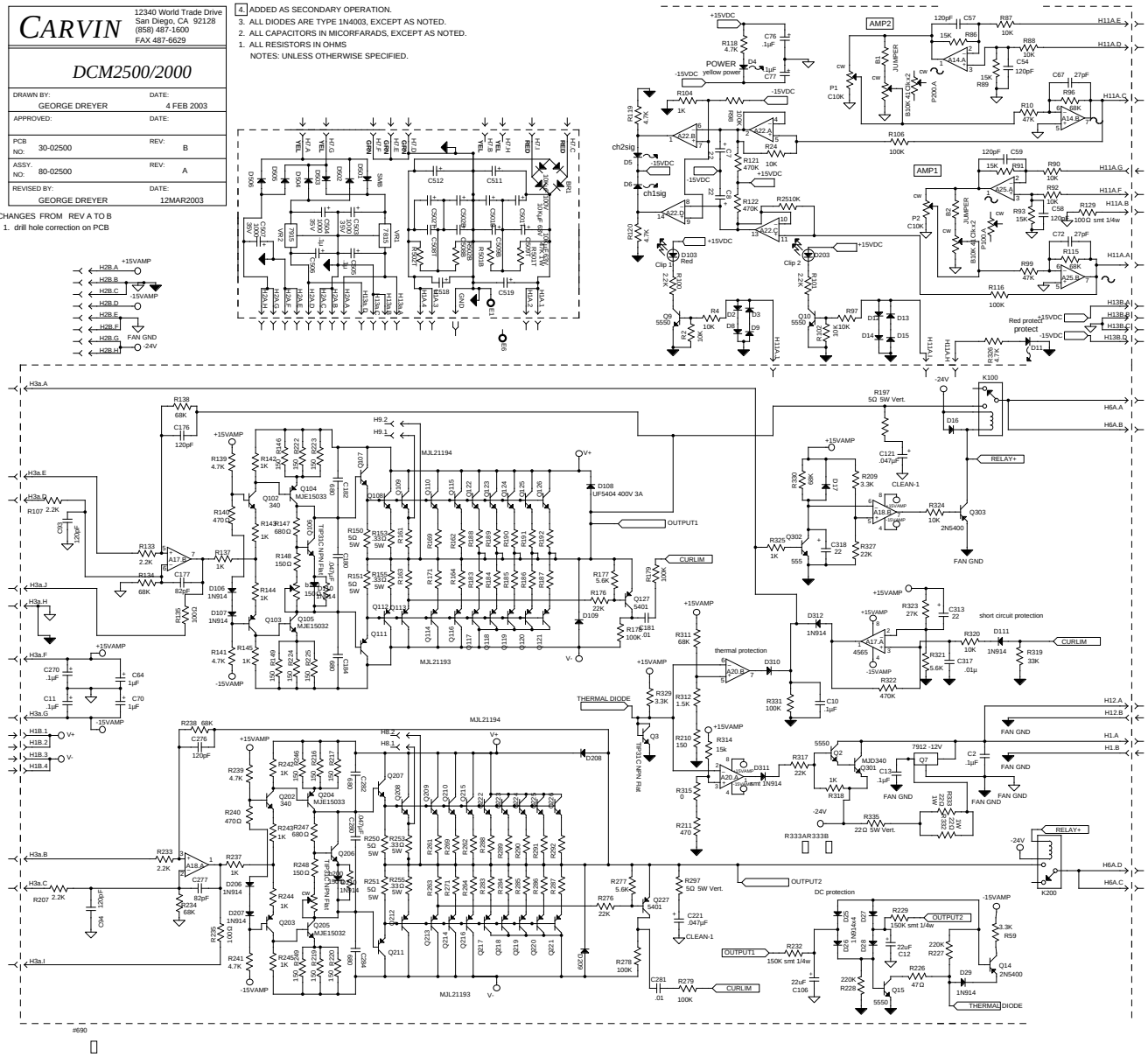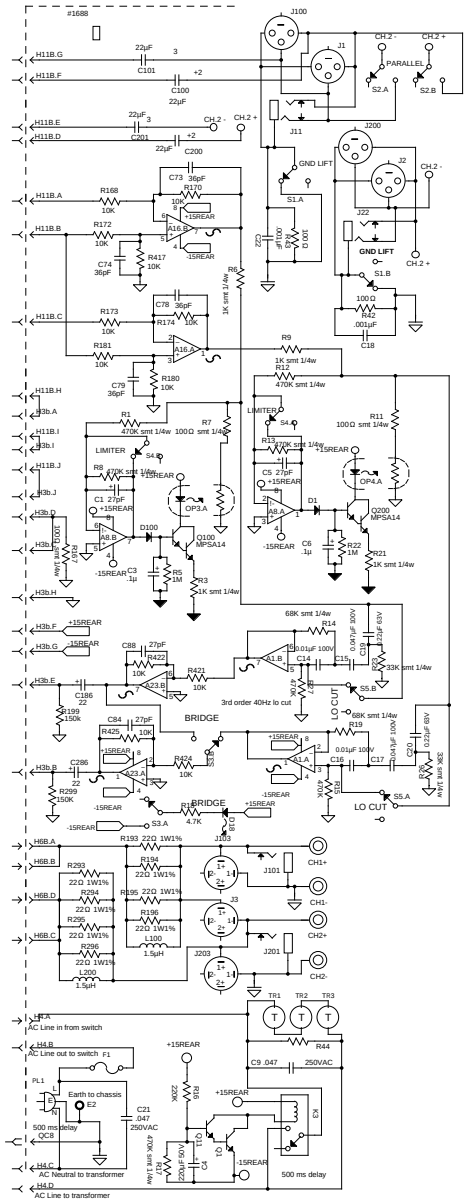
NOTES: UNLESS OTHERWISE SPECIFIED.