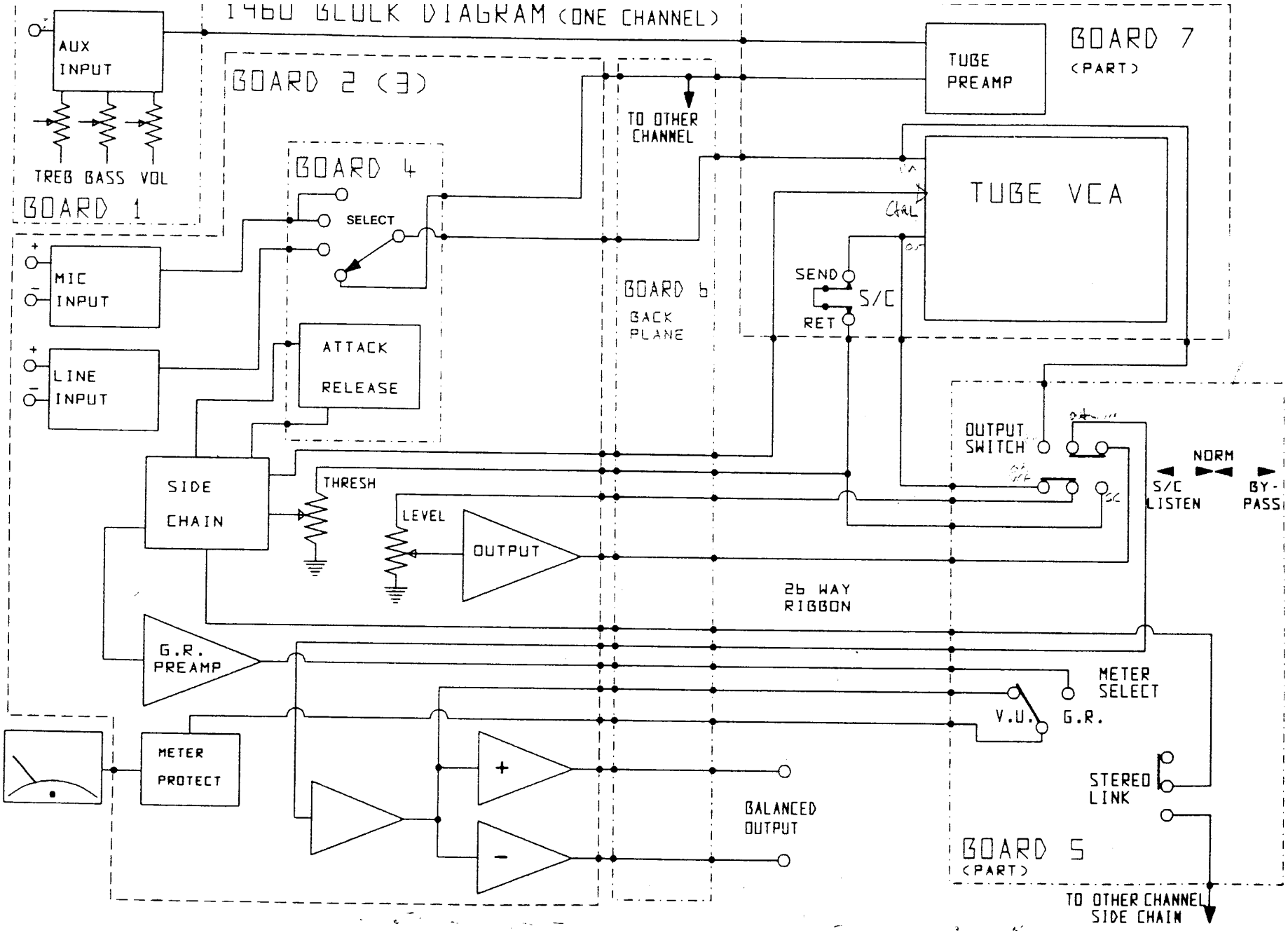
1960 BLOCK DIAGRAM (ONE CHANNEL)
AUX INPUT
TREB BASS VOL
BOARD 1
BOARD 2 (3)
BOARD 4
SELECT
MIC INPUT
LINE INPUT
ATTACK
RELEASE
SIDE CHAIN
THRESH
LEVEL
OUTPUT
G.R. PREAMP
METER PROTECT
TO OTHER CHANNEL
BOARD 6
BACK PLANE
26 WAY RIBBON
BALANCED OUTPUT
TUBE PREAMP
BOARD 7
(PART)
TUBE VCA
SEND
S/C
RET
OUTPUT SWITCH
NORM
S/C LISTEN
BY-PASS
METER SELECT
V.U.
G.R.
STEREO LINK
BOARD 5
(PART)
TO OTHER CHANNEL SIDE CHAIN

R 1k 50 ma T

1960 BOARD 7

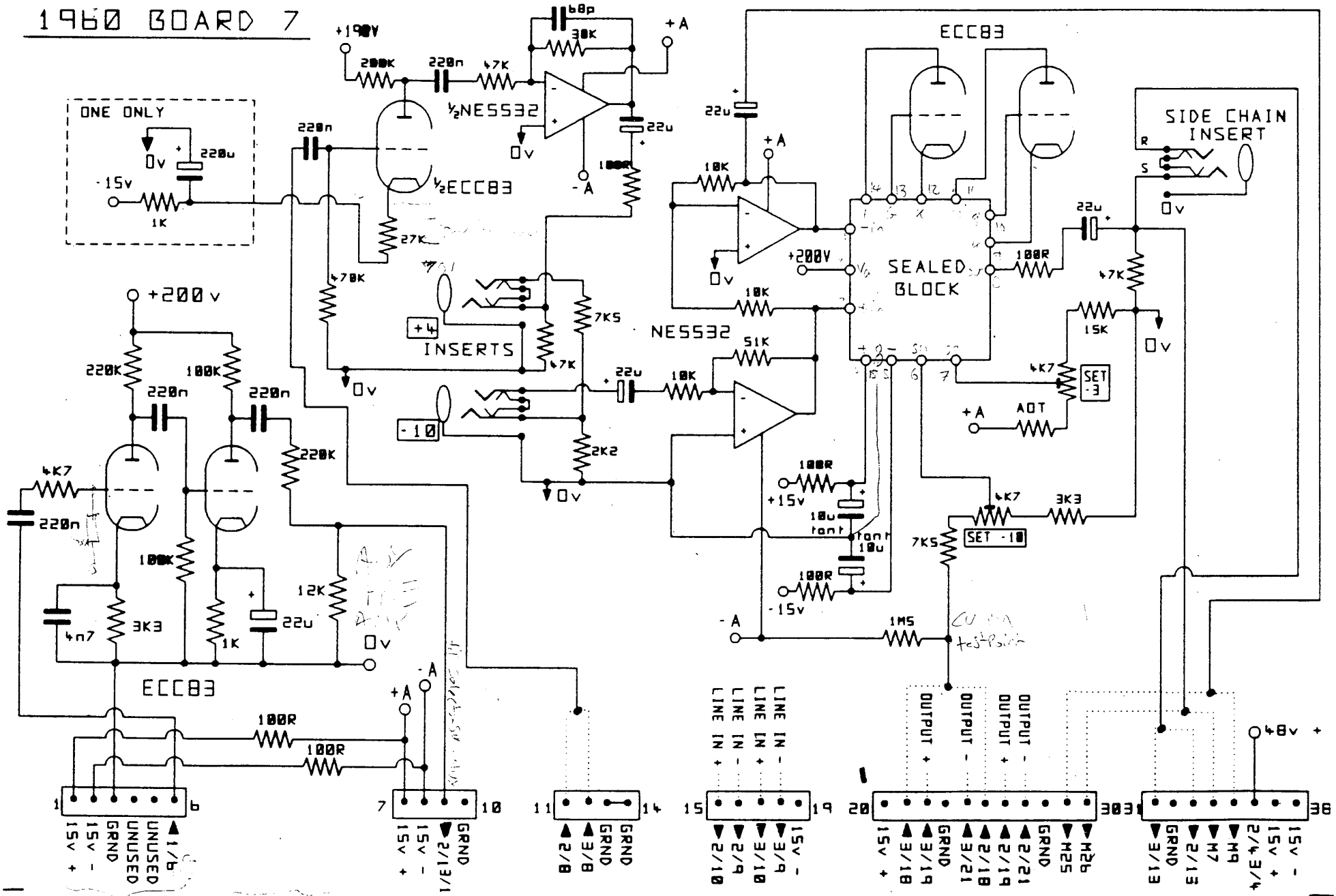
ONE ONLY
0v
220u
-15v
1K
+190V
200K
220n
47K
68p
30K
+A
½NE5532
22u
0v
-A
100R
½ECC83
27K
470K
+200v
220K
100K
220n
220n
220K
4K7
220n
100K
12K
3K3
4n7
1K
22u
0v
ECC83
+A
-A
100R
100R
1
6
7
10
15v +
15v -
GRND
UNUSED
UNUSED
1/9
15v +
15v -
GRND
2/13/1
+4
INSERTS
-10
7K5
47K
2K2
0v
22u
10K
NE5532
51K
10K
22u
10K
+200V
0v
ECC83
SEALED BLOCK
100R
+15v
10u tant
10u tant
100R
-15v
-A
1M5
test point
SIDE CHAIN INSERT
R
S
0v
22u
100R
47K
15K
0v
4K7
SET -3
+A
AOT
4K7
3K3
7K5
SET -18
11
14
GRND
GRND
2/8
3/8
15
19
LINE IN -
LINE IN +
LINE IN -
LINE IN +
2/10
2/9
3/10
3/9
15v -
20
30
OUTPUT +
OUTPUT -
OUTPUT +
OUTPUT -
15v +
3/18
3/19
GRND
3/21
2/18
2/19
2/21
GRND
M25
M26
31
36
48v +
3/13
GRND
GRND
2/13
M7
M9
2/4 3/4
15v +
15v -

1960 BOARD No.2 (3) {complete}

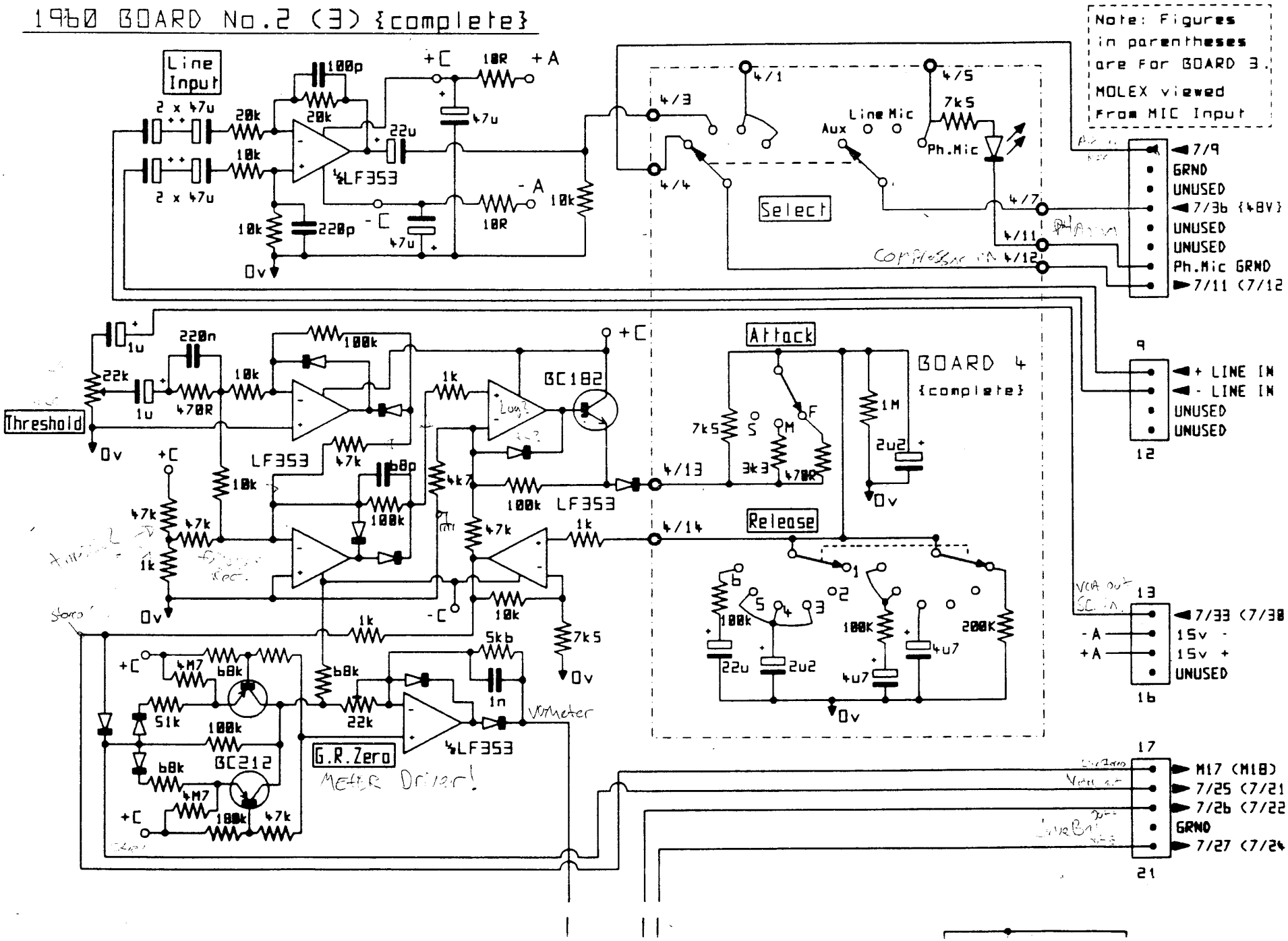

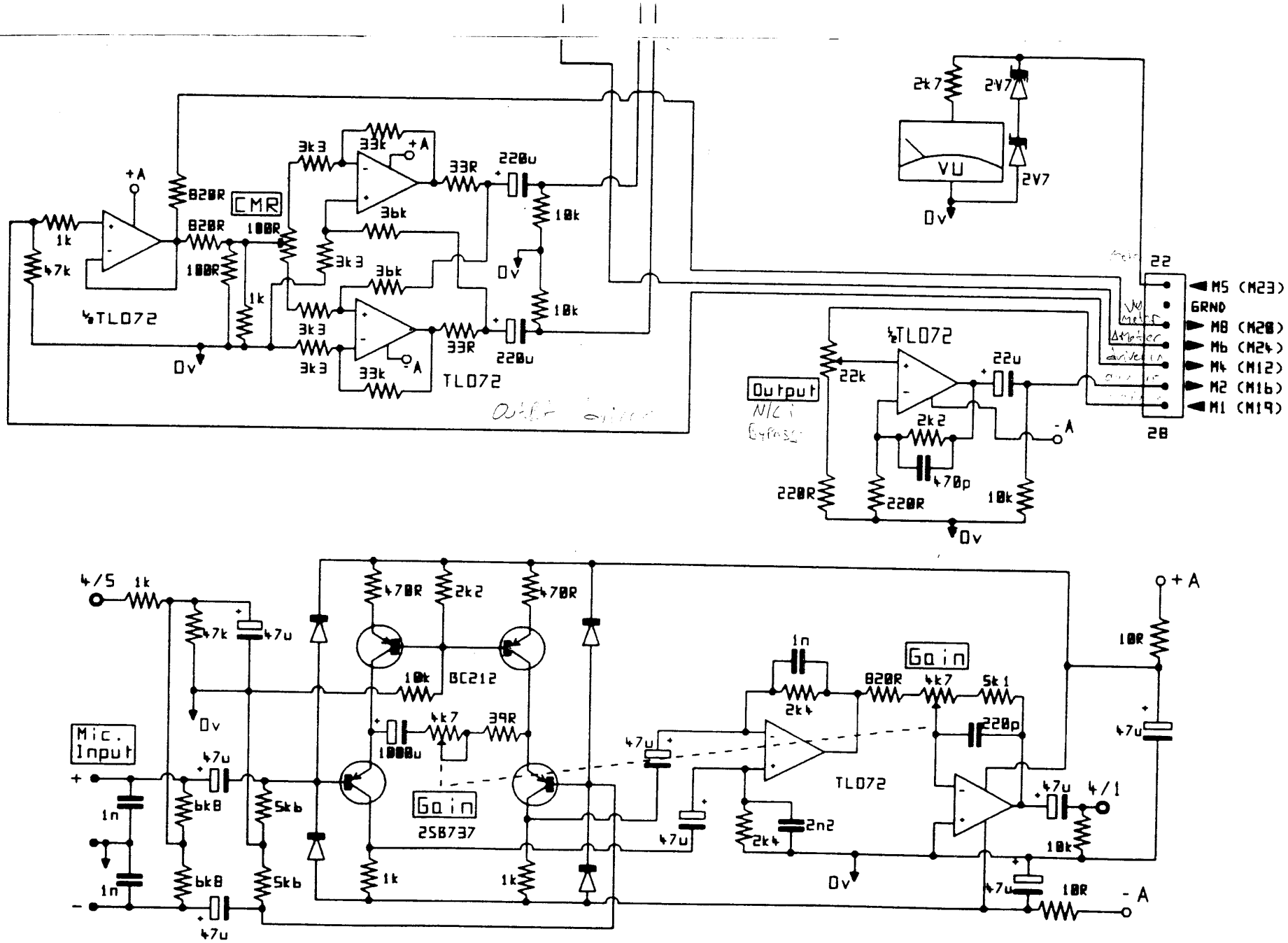
+A
820R
CMR
100R
1k
47k
½TL072
0v
3k3
33k
36k
33R
220u
10k
TL072
2k7
2V7
VU
22
M5 (M23)
GRND
M8 (M20)
M6 (M24)
M4 (M12)
M2 (M16)
M1 (M19)
28
Output
22k
22u
2k2
470p
220R
-A
4/5
470R
10k
BC212
4k7
39R
1000u
Gain
2SB737
Mic.
Input
47u
5k6
1n
2n2
820R
5k1
220p
4/1
10R

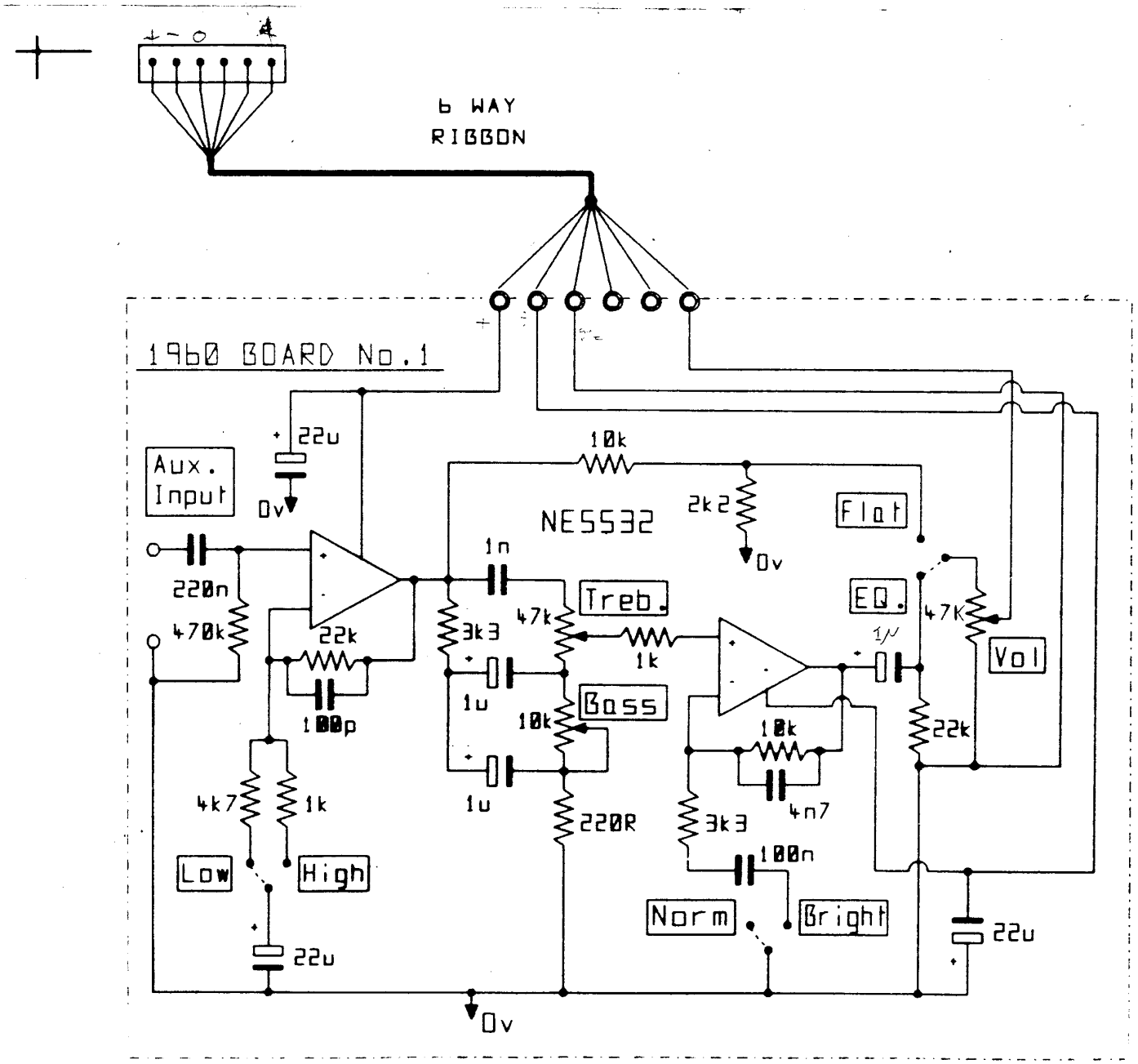
6 WAY
RIBBON
1960 BOARD No.1
Aux.
Input
22u
0v
220n
470k
22k
100p
4k7
1k
Low
High
22u
10k
NE5532
2k2
0v
Flat
1n
3k3
47k
Treb.
1k
1u
10k
Bass
1u
220R
EQ.
1µ
47K
Vol
10k
4n7
3k3
100n
22k
Norm
Bright
22u
0v

Output, V.U./G.R. Switching., Stereo Linking., Ribbon Cable Connector.

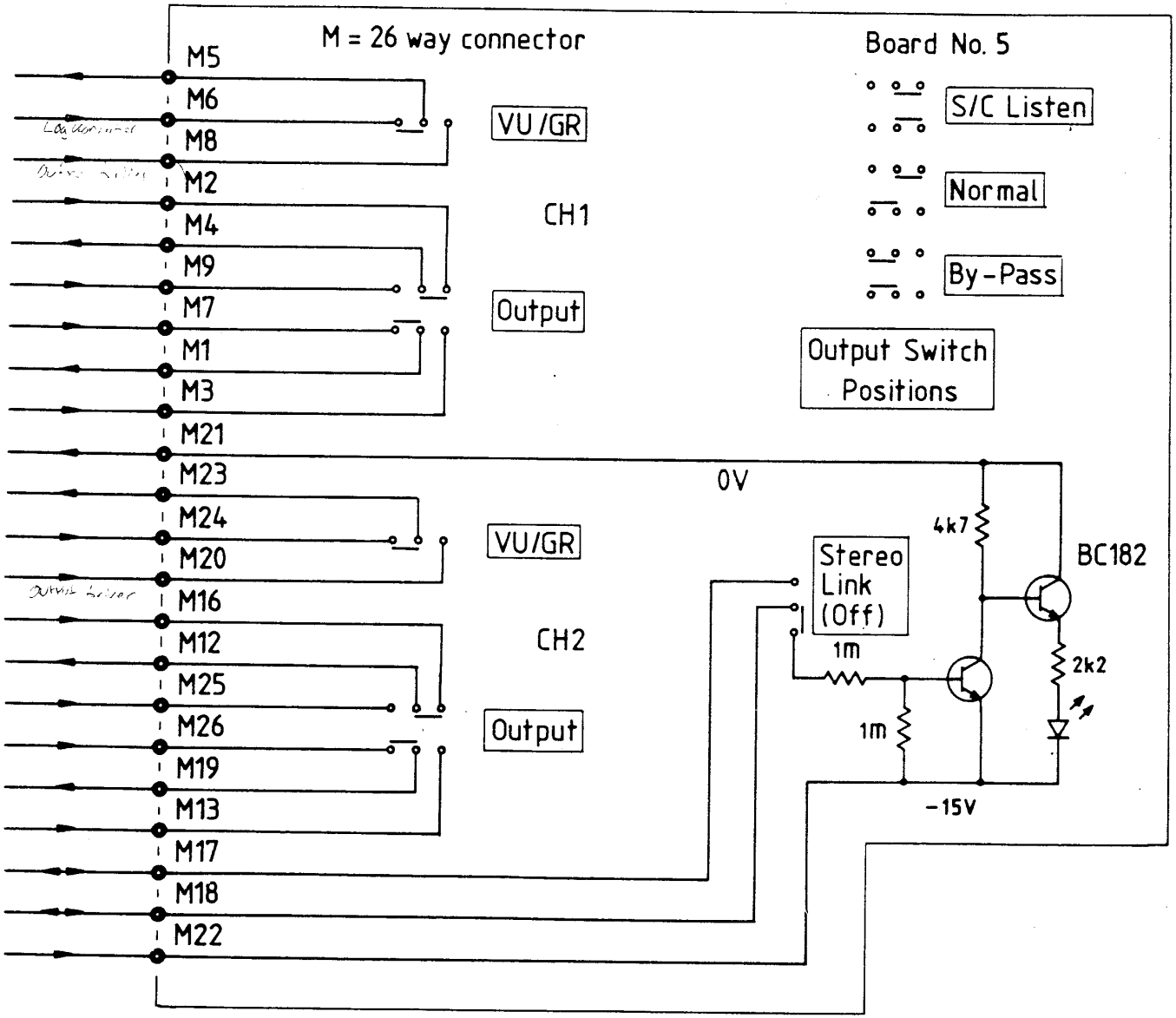

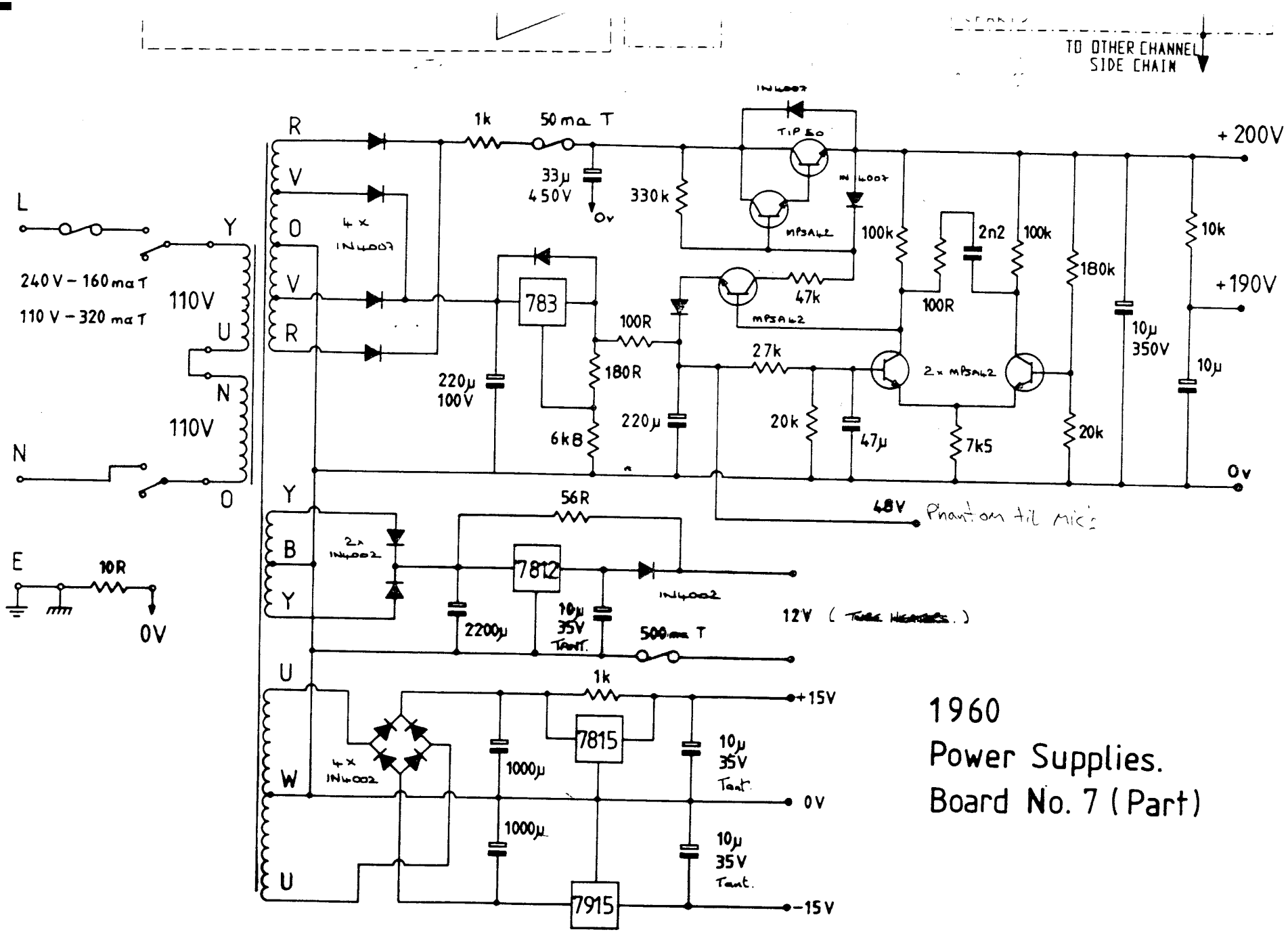

1960
Power Supplies.
Board No. 7 (Part)

1: inverting input

2: +200V (Va)

3: noninverting input

4: +15V stab.

5: −15V stab.

6: ~~CTRL/÷10db gr.~~ Set :

7: −3db gr. Set :

8: output. ÷dc?

9: K_1
10: g_1
11: A_1
} 1/2 ECC 82

12: K_2
13: g_2
14: A_2
} 1/2 ECC 82

15 0V./gnd.

Uctrl 2,2V = ÷3db gain
Uctrl 3,3V = ÷10db gain

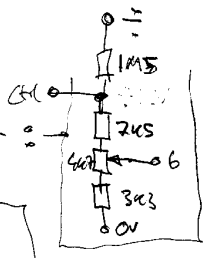

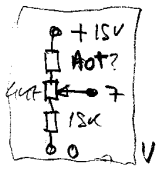

V Aot = Vctrl Set.

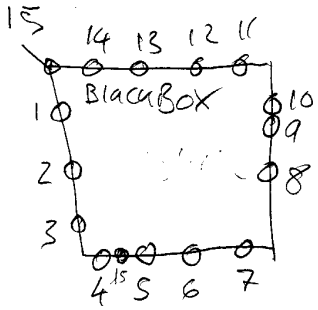

DRAWMER VACUUM TUBE COMPRESSOR AMPLIFIER 1960

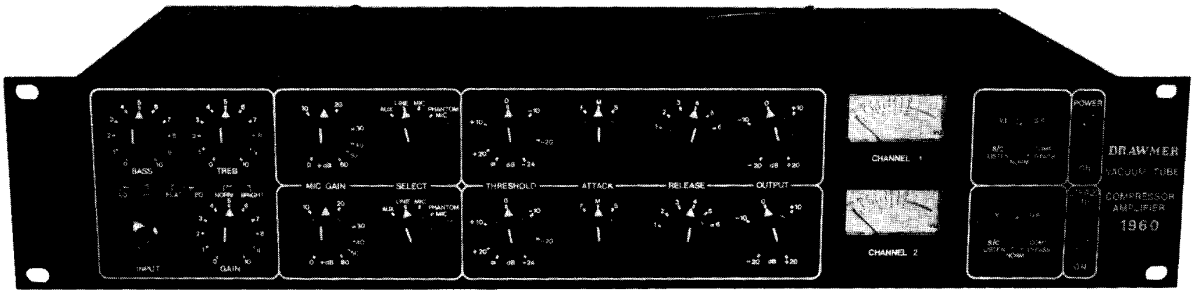

THERE IS LITTLE DOUBT IN THE MINDS OF MANY ENGINEERS AND MUSICIANS, THAT VACUUM TUBES POSSESS A UNIQUE SOUND QUALITY AND THERE IS SOME TECHNICAL EVIDENCE TO SUPPORT THIS BELIEF. SUCH EQUIPMENT IS SAID TO HAVE A "WARMER", MORE "ALIVE" SOUND.

The DRAWMER 1960 is a dual compressor amplifier, using vacuum tubes in conjunction with semiconductors, to provide a compact unit with additional capabilities.

Each channel comprises a tube compressor and pre-amplifier, feeding an electronically balanced output stage, giving a maximum output level of + 26d Bm. The compressor has a soft knee characteristic with variable threshold and switchable attack and release. An output level control provides gain make-up of upto 20dB.

In addition to a balanced line input, a low noise microphone input is provided with variable gain from 0 to 60dB. Phantom power is available if required, with a LED showing phantom power on.

A single auxiliary input on the front panel gives direct access for guitar or any other instrument. Equalisation is provided, along with sufficient gain to overload the tube preamp for sustain effects.

An insert point at the rear of each channel allows additional effects to be added before compression so that when using the mic preamp, equalisation may be used or flanging may be added when using guitar with the auxiliary input.

A second insert point provides for side chain equalisation should it be required. E.Q. applied in this way may be monitored via a "side chain listen" facility.

Analogue meters indicate signal levels or gain reduction.

Stereo linking is accomplished by means of a front panel switch with a LED showing linking in operation.

Signal access is via XLR connectors at the rear whilst inserts are un-balanced stereo jack (ring - send, tip - return).