MusicParts.Com

Technical Document Distribution

Brand:	**Ensoniq**
Model	**EPS, EPSm**
Product:	**Performance Sampler Keyboard**
Description:	**Diagnostics And Troubleshooting Guide**

Musicparts Document Number: 49718 TechTips: No Pages: 47 Dated: 1989

Hello,
Welcome to MusicParts.Com, Inc. your online resource for technical documents and service information. This PDF package may contain information, schematics, parts lists, images, engineering changes, previous versions, circuit descriptions, and many other unique features about the product you have chosen. This document was assembled from a variety of sources and is the result of our many years in the music repair business.

NOTE: Large original over-sized drawings will need to be taped together. We feel this is better than reducing them and losing the fine details.

VIEWING: This document is utilizing PAGE-ON-DEMAND downloading. This will let you navigate to any page without waiting for the entire file to download. Just click ON the thumbnails.

PRINTING: Very Important!

When the print dialog appears, please make sure **"REDUCE TO PAPER SIZE" OR "SHRINK OVERSIZED PAGES "** is checked, otherwise you may cut off the edge of the page. This will compensate for your printer's margins and produce a great looking printout. Also please stay online while printing this document to make sure you get all the pages.

Visit us on the web at: http://www.musicparts.com/
Email us at: customerservice@musicparts.com

© 2006 MusicParts.Com, Inc.

Service Manual

ensoniq®

THE TECHNOLOGY THAT PERFORMS

EPS

Performance Sampler

EPS m

MusicParts.com

P/N 9312 000 701-B

TABLE OF CONTENTS

			Page
Important Things to Know About the EPS/EPS-M			2
Communications Path			4
Checking the Power Supply			5
Power Supply Measurements			6
Transformer and Power Supply Voltage Check Points			6
Testing the Power Supply Unloaded			7
Display Self-test Mode			7
Using Self-test Mode to Diagnose the Keypad/Display			7
Troubleshooting Guide			8
EPS/EPS-M Diagnostics			13
Most Commonly Asked User Questions			14
EPS/EPS-M Test Procedure			15
EPS/EPS-M Burn-in Test Program			18
EPS Hardware Notes			19
EPS-M Hardware Notes			20
Software Notes (O.S. 1.1 to O.S. 2.35)			21
Section A	-	Replacing the EPS Main Board	25
Section B	-	Replacing the EPS Keypad/Display Board	25
Section C	-	Replacing the EPS Keyboard	26
Section D	-	Replacing the EPS Power Supply Board	27
Section E	-	Replacing the EPS Transformer	27
Section F	-	Replacing the EPS Pitch/Mod Wheel Assembly	28
Section G	-	Replacing the EPS Line Filter	28
Section H	-	Replacing the EPS Disk Drive	29
Section A	-	Replacing the EPS-M Main Board	31
Section B	-	Replacing the EPS-M Control Panel	32
Section C	-	Replacing the EPS-M KPC Board	32
Section D	-	Replacing the EPS-M Power Supply Board	33
Section E	-	Replacing the EPS-M Transformer	33
Section F	-	Replacing the EPS-M OEX-8 Board	33
Section G	-	Replacing the EPS-M Line Filter	34
Section H	-	Replacing the EPS-M Disk Drive	34
Figure 1	-	Communications Path	4
Figure 2	-	AC Line Voltage Check Points	5
Figure 3	-	Power Supply Voltage Check Points	6
Figure 4	-	Main Board Component Locations	7
Figure 5	-	No LEDs Lit (flow chart)	9
Figure 6	-	Some LEDs Lit (flow chart)	10
Figure 7	-	All LEDs Lit, No Display (flow chart)	11
Figure 8	-	All LEDs Lit, No Display, Continued (flow chart)	12
Figure 9	-	Mono to Stereo Cable Wiring	18
Figure 10	-	EPS Exploded View	24
Figure 11	-	EPS Button Colors	26
Figure 12	-	EPS Bottom of Case	27
Figure 13	-	EPS-M Exploded View	30

MusicPartsCom

IMPORTANT THINGS TO KNOW ABOUT THE EPS AND EPS-M

As with every ENSONIQ product, all EPS and EPS-M service will be handled through the ENSONIQ Module Exchange Program. Rather than diagnose and exchange individual components, you will replace complete modules. We feel that this is the most time and cost effective method of repair, both for you and your customers.

The instructions in this manual are for both the EPS and the EPS-M unless otherwise noted. Where the instructions say to check the keyboard of the EPS, substitute a check of the KPC board on the EPS-M. IF YOU DON'T READ ANY OTHER PART OF THIS MANUAL, READ THIS SECTION.

1. GETTING AROUND THE EPS/EPS-M

You will need:

a. EPS or EPS-M *Musician's Manual* (read pages 1-12)
b. EPS/EPS-M Burn-in Disk (version 3.0 or higher)
c. EPS/EPS-M Test Disk (including the latest O.S., ROCK PIANO, LEGATO FLUTE, and 8-OUT TEST)
d. Communications Test Board

2. THE EPS KEYBOARD and the EPS-M KPC BOARD

The Poly-Key™ Pressure Keyboard on the EPS (and the KPC board on the EPS-M) is a complex module which contains its own computer and software. For this reason, when necessary, you will be swapping it out as a whole unit. Display information sent to and from the Main Board is processed through the Keyboard/KPC. What might appear to be a frozen display, therefore, could be a bad Keyboard/KPC For more troubleshooting hints, see Communications Path on pages 4-5 and flow charts on pages 9-12 Be sure to have the serial number of the unit ready when ordering a replacement Keyboard/KPC

IMPORTANT! Keyboard EPROM Version **(EPS only)**

Each version of the Keyboard EPROM is optimized for the hardware that is within the keyboard. In most cases, you should *not* update this version *nor* change the KPC board that is attached to the Keyboard. The Keyboard and KPC are one complete unit

Cables

When reconnecting the 20-pin Keyboard/KPC cable to the Main Board, make sure that the marked line on the cable is aligned with pin 1 and that the cable is not mis-pinned. If the cable is mis-pinned or installed backwards, fuses F3 and F4 on the power supply board will blow. **NOTE:** If one fuse blows, the other will also blow; you will have to replace both.

When installing the keyboard back into the EPS, be sure that the keyboard cable is flat under the keyboard and that the ferrite bead is not trapped on top of the main board.

3. THE DISK DRIVE

Transporting a unit

Some of the units may be shipped with a protective plastic yellow sheet inserted in the Disk Drive. **You must remove this sheet before powering on the unit.** There is a printed label near the Disk Drive on every new unit shipped. This label contains important information concerning the care of the EPS/EPS-M Disk Drive and lists recommendations regarding the treatment of the drive during transport. To reiterate, **we do not, under any circumstances, recommend the insertion of an actual disk during transport nor do we recommend the use of cardboard disk sheets in place of plastic ones.** Transport the unit only with either a plastic sheet in the drive or nothing in the drive at all.

PLEASE DO NOT SHIP AN EPS, EPS-M OR A REPLACEMENT DISK DRIVE IN A BOX PACKED WITH PEANUTS. If you must, wrap the entire unit in plastic first. These peanuts may cause severe damage to the Disk Drive or Keyboard.

What disks to use

It is very important to use double-sided, double-density 3.5" micro-floppy disks. The EPS/EPS-M writes information to every track on a disk, so it is imperative that the disk be of superior quality and certified for double-sided use.

MusicPartsCom

Testing the Disk Drive

The best way to test the Disk Drive is by formatting a disk. When a disk is formatted, the EPS/EPS-M reads and writes every track on that disk. If the formatting attempt fails, it is likely that the disk itself is faulty. Always try formatting another blank disk before determining that the Disk Drive is faulty. Unlike some computer systems, the EPS/EPS-M does not automatically discard bad sectors when formatting. The entire disk must be good for successful formatting.

The Disk Drive shield **(EPS only)**

You will find that there is a metal plate located on the bottom of the Disk Drive (see **Figure 10**). The function of this plate is to keep the 34-pin ribbon cable from interfering with the Disk Drive motor. Replacement Disk Drives are not sent with metal plates attached. It is important, therefore, to transfer the metal plate from the old drive to the replacement drive. The plate is attached with two screws and accompanying star washers This plate must be installed to ensure proper operation of the drive.

4. OPERATING SYSTEM

The operating system is only on the EPS O.S. disk. This disk can be used in both the EPS and the EPS-M. The EPS-M, however, must use O.S. version 2.35 or higher. EPS's with serial numbers greater than 16582 should use O.S. Version 2.35 or higher.

An EPS O S. takes up approximately 170 blocks on a disk so without the O.S. on a disk you have more room for sounds. The O.S. Version on the disk can be easily updated by following the procedure on page 22 of the EPS *Musician's Manual* (page 25 of the EPS-M *Musician's Manual*). For best results when testing, use the latest version of the operating system. Call ENSONIQ Customer Service for the latest O.S. version.

5. PLASTIC CASE (EPS only)

Avoid Stripping Screws

Because the structural components (Base, Control panel, and Wheel cover) are made of plastic, *great care* should be exercised when assembling or disassembling any part of the EPS. **Avoid over-tightening screws in the plastic case when executing any repair procedure!**

When replacing any of the self-tapping screws, it is possible to over-tighten the screws and strip a hole in the case, making it necessary to replace the case or control panel. To keep this from happening, follow these procedures:

a. Before replacing a self-tapping screw (or screws), put a drop or two of LOCKTITE, Super Glue Gel, or RTV into the hole.
b. Install the screw, and tighten it only until the sub-assembly being attached is snug against the case. **Do not tighten the screws any further.** When the glue sets, the screws will hold the sub-assembly tightly in place.

It is important to make sure that there are no loose screws, as they may come loose and short out something

Brass Inserts

To prevent stripping, there are brass inserts in the Main Board ground boss and in the four control panel holes. Be sure to use machine screws in these locations. **Do not use a self-tapping screw in a brass insert as this will ruin the insert.**

6. EPS-M CONTROL PANEL

Avoid Stripping Screws

Because the Control Panel is an aluminum extrusion, great care should be taken when assembling or disassembling any part of it. To avoid stripping and to aid in alignment, you should use a hand screwdriver and try to install the screws into the existing holes in the panel

Buttons and Switches

Due to the variation in switch types on the EPS-M Keypad/Display board and button types on the Control Panel: the Control Panel, Keypad/Display board, and KPC board will be replaced as an assembly.

MusicParts.com

COMMUNICATIONS PATH

It is important that you completely understand the communications path of the EPS/EPS-M. Please read this carefully.

The EPS/EPS-M Main Board, Keypad/Display Board and Keyboard/KPC are complete computer systems in themselves, each with its own microprocessor and operating software. The modules communicate with each other using serial communication ports. Whenever a key is played on the Keyboard, for example, the Keyboard microprocessor transmits this information to the microprocessor on the Main Board.

The Keypad/Display Board communicates with the Main Board through the Keyboard/KPC. Whenever the Main Board wants to put a message on the Display, it sends the message to the Keyboard/KPC which then passes it on to the Display. Whenever a button is pressed on the control panel, the Keypad/Display Board sends the message to the Keyboard/KPC which, in turn, passes it on to the Main Board.

The communications path is shown in **Figure 1**. The Main Board communicates with the Keyboard/KPC over a two-line asynchronous interface carried by the 20-pin Keyboard/KPC ribbon cable. The Keyboard/KPC communicates with the Keypad/Display Board over a three-line synchronous interface which is carried over to the Main Board via the 20-pin ribbon cable, then up to the Keypad/Display Board via the 7-pin Display cable on the EPS and the 10-pin Display cable on the EPS-M.

Due to the complexity of the modules involved, it is often difficult to determine which module is at fault when a communications problem occurs. In order to facilitate troubleshooting, a Communication Test Board, Test Disk and Burn-in Test Disk are available.

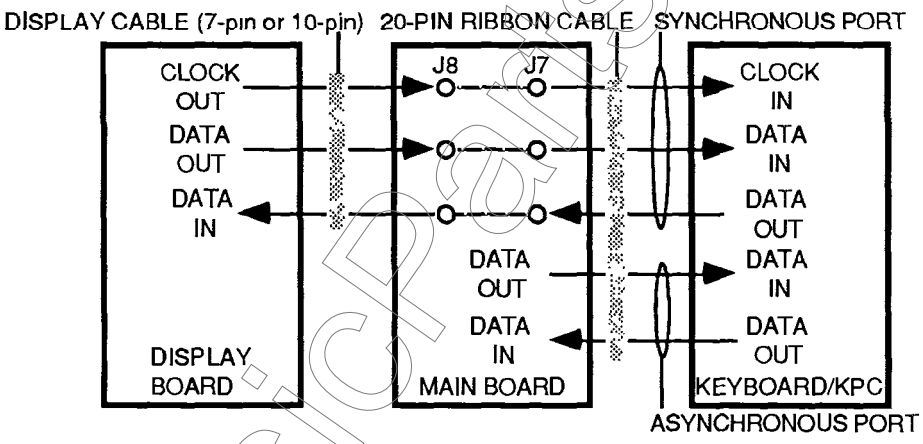

FIGURE 1 - Communications Path

If the Main Board is operational but cannot communicate properly with the Keyboard/KPC, you will hear a slowly repeating low pitched tone upon power up. If the Main Board is operational and in communication with the Keyboard/KPC, but the Keyboard/KPC cannot communicate properly with the Keypad/Display Board, you will hear a quickly repeating high pitched tone. **NOTE:** These tones are quite loud, so keep the sound system volume low.

slow - low pitched tone = Main Board to Keyboard/KPC communication problem
quick - high pitched tone = Keyboard/KPC to Keypad/Display Board communication problem

The occurrence of either of these tones indicates a communications problem. It could be something as simple as a bad ribbon cable or Display cable, or it could be a problem in one of the modules. In order to help you identify a faulty module, a special Communication Test Board is included with this service kit. The Communication Test Board simulates the operation of the Keyboard/KPC and can be used as a "known good" module in place of the Keyboard/KPC for troubleshooting.

IMPORTANT!

When using the Communication Test Board, keep in mind that it is sensitive to static discharge. Handle the board by the edges and store it in the anti-static shipping bag when not in use. Do not let the board short out when testing, place an insulator (cardboard, paper, etc.) underneath it.

MusicParts.com

Attaching the Communications Test Board

If an EPS or EPS-M has a communications problem, turn the unit off and unplug the 20-pin Keyboard/KPC ribbon cable from the Main Board at connector **J7** (**J6** on the EPS-M). Plug the 20-pin ribbon cable from the Communication Test Board into **J7** (**J6** on the EPS-M). This will eliminate the Keyboard/KPC as a variable. Turn the system on. If the communications problem persists, you know the Keyboard/KPC is not at fault If communication is restarted, however, the Keyboard/KPC is at fault. See the flow charts on pages 9-12 for troubleshooting procedures.

There is one further complication. Since the communications path between the Keyboard/KPC and Keypad/Display Board is routed through the Main Board, there is a remote possibility that the printed circuit connections between the two connectors are defective. If you have an EPS or EPS-M which has a problem communicating with its Keypad/Display Board, you may want to verify continuity between the connectors on the Main Board. Turn off the power and unplug the 20-pin ribbon cable from the EPS Main Board at **J7** (**J6** on the EPS-M) and the EPS 7-pin Display cable from the Main Board at **J8** (EPS-M 10-pin Display cable from the Main Board at **J7**). Using an Ohmmeter, verify continuity between the following points on the Main Board

20-pin Keyboard Connector		7-pin or 10-pin Display Connector
Pin 1	to	Pin 1
Pin 3	to	Pin 2
Pin 5	to	Pin 3

CHECKING THE POWER SUPPLY

Many EPS/EPS-M problems may be related to a faulty Power Supply, Transformer or Line Filter You should check these before troubleshooting the rest of the unit.

Check to make sure that all the cable connections are secure and correct. Plug the EPS in and turn it on. After the EPS has warmed up for five minutes, begin to test the voltages at the points shown in **Figures 2** and **3** If the voltages vary outside the allowable limits, follow the procedure described under **TESTING THE POWER SUPPLY UNLOADED** before replacing it.

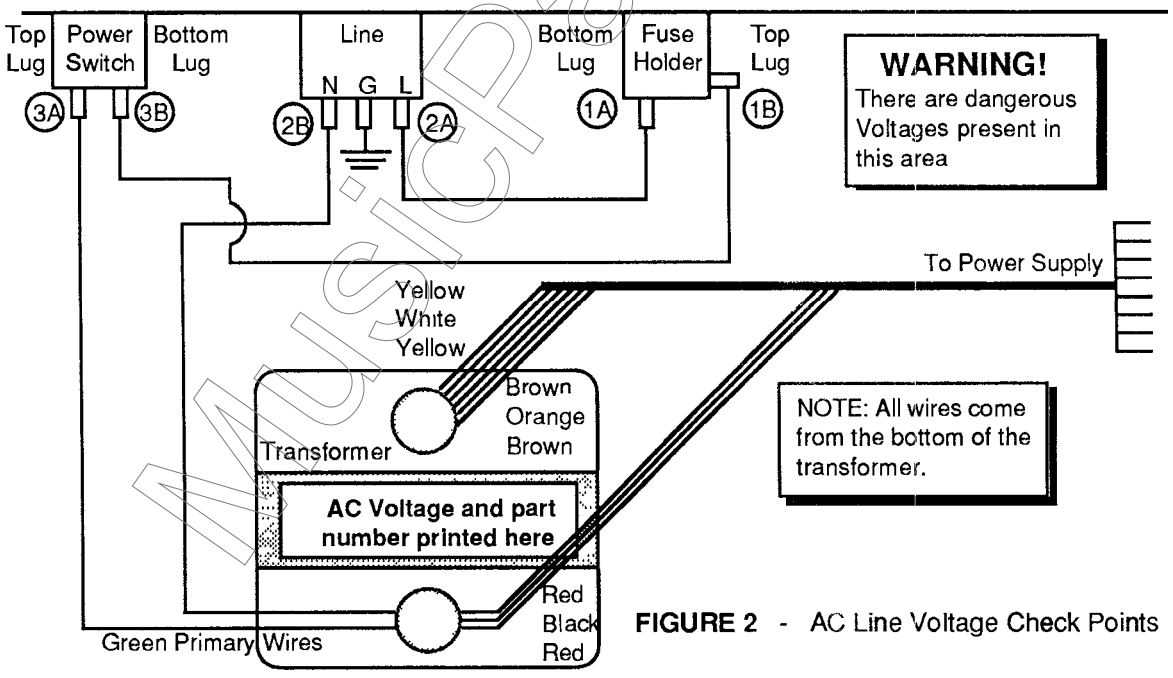

FIGURE 2 - AC Line Voltage Check Points

AC LINE VOLTAGE MEASUREMENTS (See Figure 2)	
With the power switch **OFF**, the proper AC Line Voltage should read from: 2B-1A, 2B-2A, 2B-3B	With the power switch ON, the proper AC Line Voltage should read from: 2B-1A, 2B-1B, 2B-3B, 2B-3A There should be no voltage across the power switch.

MusicPartsCom

POWER SUPPLY MEASUREMENTS

The voltage and part number of the Transformer is denoted by the label on the top of the Transformer The Power Supply part number is silk-screened on the lower left of the Power Supply PC board.

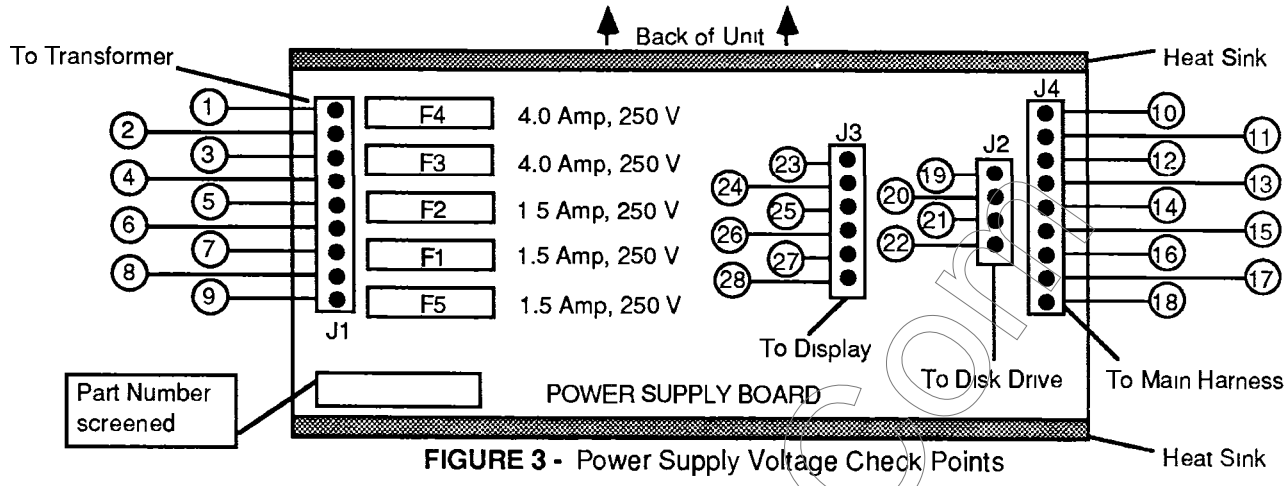

FIGURE 3 - Power Supply Voltage Check Points

The original and current Transformer/Power Supply configurations for the EPS/EPS-M are·

EPS Original Transformer Part Number and Voltage	EPS/M Current Transformer Part Number and Voltage	EPS Power Supply Part Number	EPS-M Power Supply Part Number
1450000602 V115	1450000142 V120	4001007701	4001007702
1450000612 V220	1450000152 V230	4001007701	4001007702
1450000632 V240	No Change	4001007701	4001007702
1450000422 V100	No Change	4001007701	4001007702

TRANSFORMER AND POWER SUPPLY VOLTAGE CHECK POINTS

The proper AC Line Voltage for each EPS/EPS-M should be printed on the top of the Transformer **Figure 2** shows the check points for reading the AC Line Voltage. **Figure 3** shows the connector terminal numbers for the Power Supply and Transformer. It is normal for Line Voltage to vary +/- 10%.

The following chart lists the voltage ranges for proper operation of each supply (fully loaded) and the appropriate terminals to read across with the volt meter (refer to **Figure 3** for terminal locations):

Designation	Terminals +	Terminals -	Connector	Allowable range	Units
Digital Supply	1	3	J1	13 to 18.7	VACrms
Analog Supply	4	6	J1	22 to 28.6	VACrms
Display Filament	7	9	J1	4.7 to 6.05	VACrms
+VA	10	11	J4	+15.3 to +19.8	VDC
-VA	12	11	J4	-15.3 to -19.8	VDC
+5 Analog	14	13	J4	+4.75 to +5.25	VDC
+V Digital	15	13	J4	+7.2 to +12.1	VDC
+5 Memory	16	13	J4	+4.75 to +5.25	VDC
+5 Digital	18	17	J4	+4.75 to +5.25	VDC
+5 X	24	23	J3	+4.75 to +5.25	VDC
-35	25	23	J3	-29 to -37.2	VDC
Filament	27	28	J3	4.7 to 6.05	VACrms
Display Offset	27	26	J3	-22.7 to -31.5	VDC
+5 X	19	20	J2	+4.75 to +5.25	VDC
+12 Disk	22	21	J2	+11.4 to +12.6	VDC

MusicPartsOnly.com

TESTING THE POWER SUPPLY UNLOADED

If the Power Supply readings exceed the indicated tolerance (particularly the +5 Digital line between terminals 18 and 17 or +5 Memory line between terminals 16 and 13) it is possible that a defective component on the Main Board is drawing the Power Supply down. In this case, you should test the Power Supply unloaded before proceeding. To do so, follow this procedure:

Turn the unit OFF and remove the three connectors on the right side of the Power Supply, leaving only the connector from the Transformer attached at **J1**.

Voltages should read as in the chart on page 6. If these readings are normal when the supply is unloaded, but incorrect when the power supply is loaded then this usually indicates a problem with the Main Board or Keypad/Display Board.

DISPLAY SELF-TEST MODE

When the Keypad/Display is receiving power from the Power Supply but is not in proper communication with the Main Board, the Keypad/Display Board enters **Self-test mode**. In Self-test mode, the Display remains blank until you press the buttons on the control panel. Pressing various control panel buttons will cause the Display to print characters, home the cursor, etc.

Using Self-test Mode to Diagnose the Keypad/Display Assembly

1. **If the unit comes in with a blank display, but is in Self-test mode** (i e. the Display prints out characters when control panel buttons are pressed in accordance with the chart on page 8) this indicates the problem is either the Main Board or the communication link between the Main Board, Keyboard/KPC and the Keypad/Display Board Before replacing anything, check all connections, particularly the 20-pin cable to the Keyboard/KPC.

   If pressing buttons causes only the leftmost character of the display to change, this usually indicates a defective cable connection between the Main Board and Keyboard/KPC or possibly a bad Keyboard/KPC.

2. **If the unit is in Self-test mode but the display does not respond according to the above chart,** the problem is most likely in the Keypad/Display Board. If certain buttons do not function properly during normal EPS/EPS-M operation, test them while the display is in Self-test mode.

If you can't isolate a problem that seems related to the display, the display can be forced into Self-test mode using the following procedure. With the power off, face the front of the unit, then:

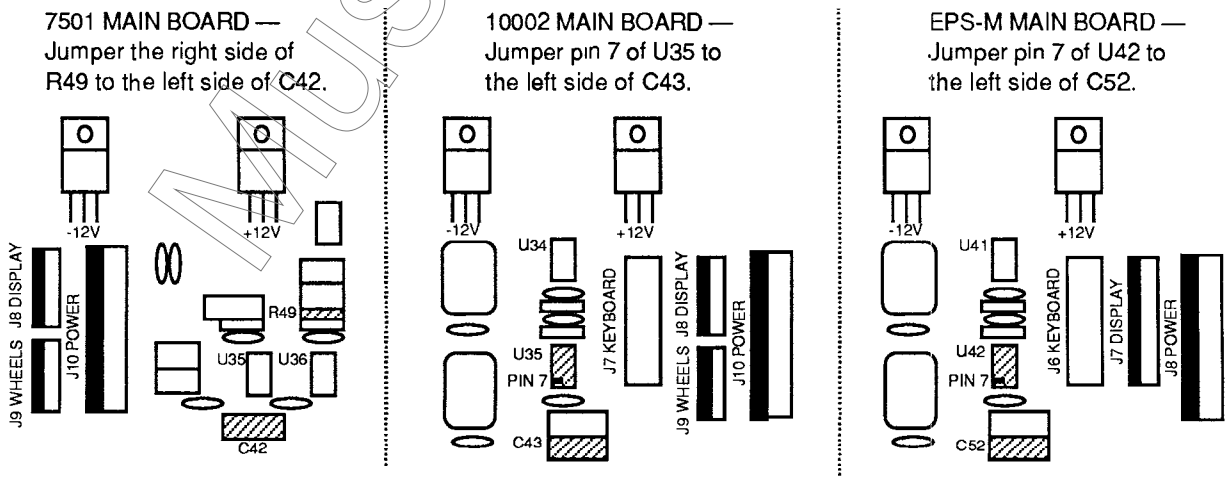

FIGURE 4 - Main Board Component Locations

On power up, the display will stay in Self-test, allowing you to check the Keypad/Display Board independently

MusicParts.com

The Chart below details how the control panel buttons are mapped in Self-test mode:

Press:	Display Reads:	Press:	Display Reads:
LOAD	8	Down Arrow	4.
EDIT	$	Left Arrow	.
COMMAND	1.	Right Arrow	/
INSTRUMENT	-	CANCEL•NO	?
SEQ•SONG	3	ENTER•YES	(Home Cursor)
MIDI	9	Instrument•Track 1	Space
SYSTEM	'	Instrument•Track 2	&
1/ENV 1	+	Instrument•Track 3	,
2/ENV 2	0	Instrument•Track 4	2
3/ENV 3	1	Instrument•Track 5	"
4/PITCH	6	Instrument•Track 6	(Home Cursor)
5/FILTER	7	Instrument•Track 7	5.
6/AMP	<	Instrument•Track 8	4
7/LFO	=	SAMPLE	2.
8/WAVE	(Home Cursor)	SET KEYBOARD	>
9/LAYER	(Home Cursor)	RECORD	0.
0/TRACK	*	STOP/CONTINUE	5
Up Arrow	3.	PLAY	6.

TROUBLESHOOTING GUIDE

In most cases, the faulty module in an EPS/EPS-M can be determined through normal use. In some cases, however, it is difficult to isolate the problem. The following flow charts can help you diagnose units which appear dead (no display).

When troubleshooting an EPS, always disconnect any expansion devices which may be present (such as memory expanders, the SCSI Interface or the OEX-8 Output Expander). This will prevent a faulty expander from complicating your troubleshooting. The procedures for testing the Memory Expanders and the SCSI Interface are included with the corresponding expander. The procedure for testing the OEX-8 can be found on page 17.

The following pages include troubleshooting flow charts:

Page	Problem
9	EPS/EPS-M with No LEDs Lit
10	EPS/EPS-M with Some LEDs Lit
11-12	EPS/EPS-M with All LEDs Lit, No Display

MusicParts.Com

TROUBLESHOOTING AN EPS/EPS-M WITH NO LEDS LIT

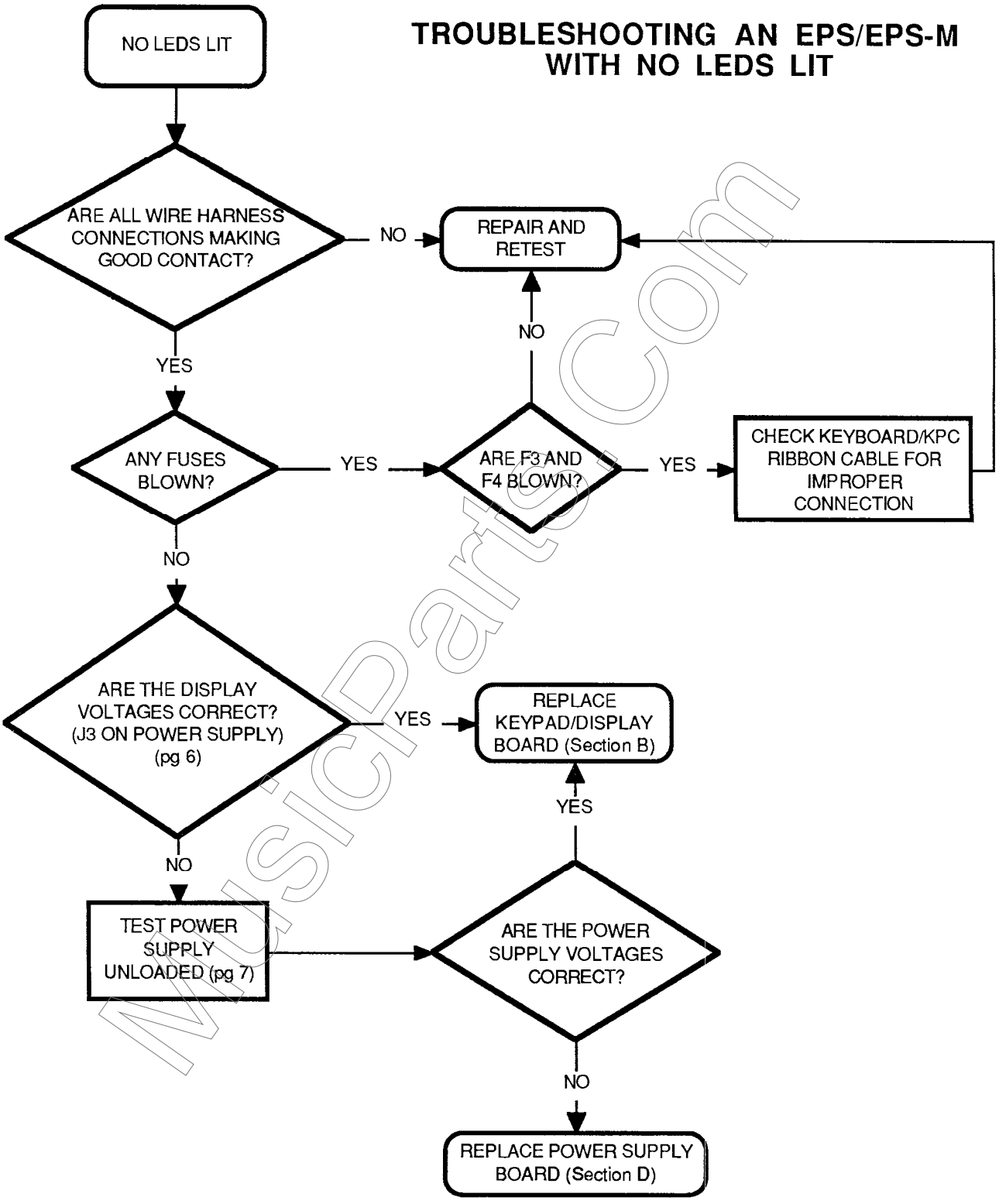

FIGURE 5 - No LEDs Lit

MusicPartsCom

TROUBLESHOOTING AN EPS/EPS-M WITH SOME LEDS LIT

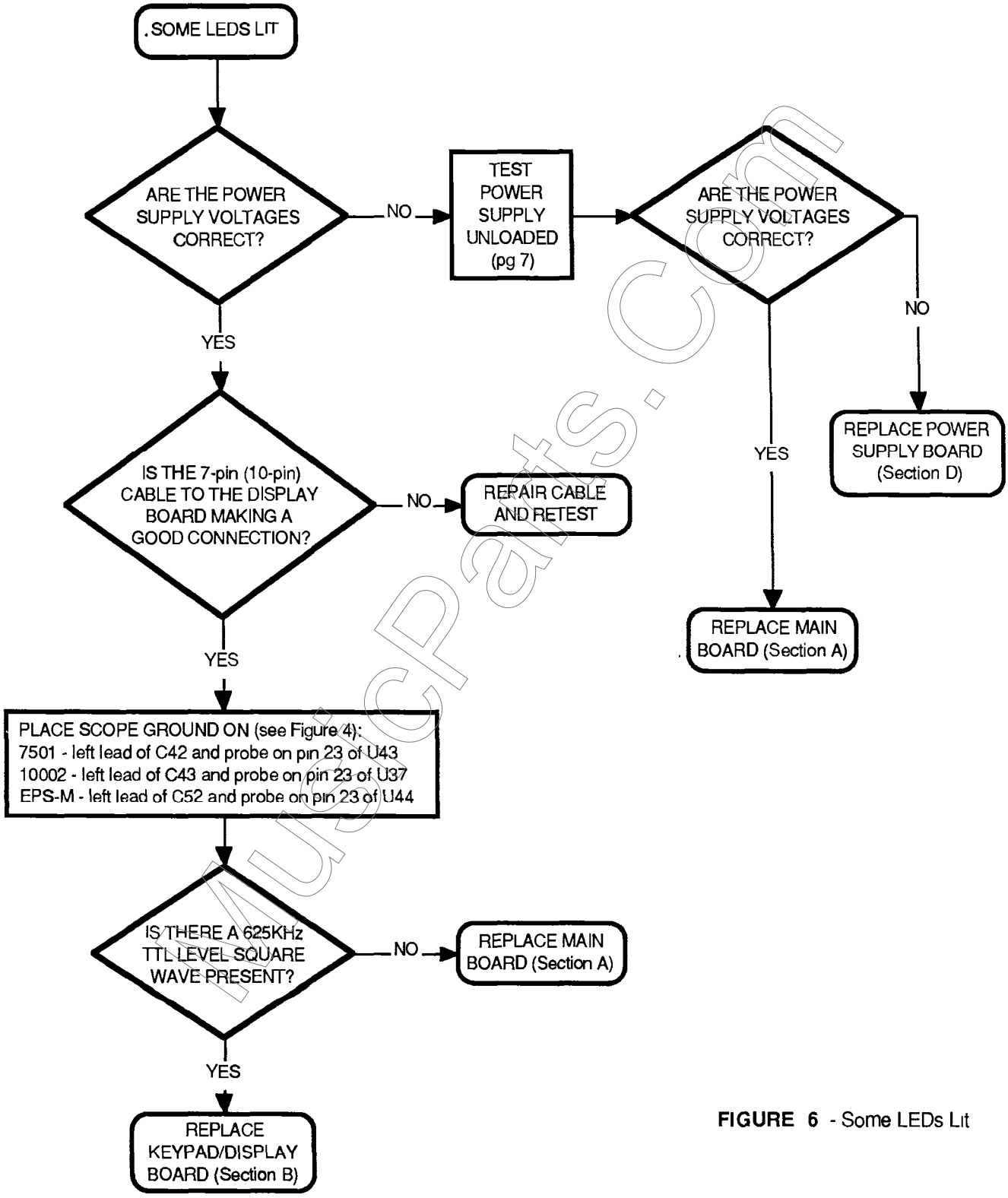

FIGURE 6 - Some LEDs Lit

MusicPartS.Com

TROUBLESHOOTING AN EPS/EPS-M WITH ALL LEDS LIT, NO DISPLAY

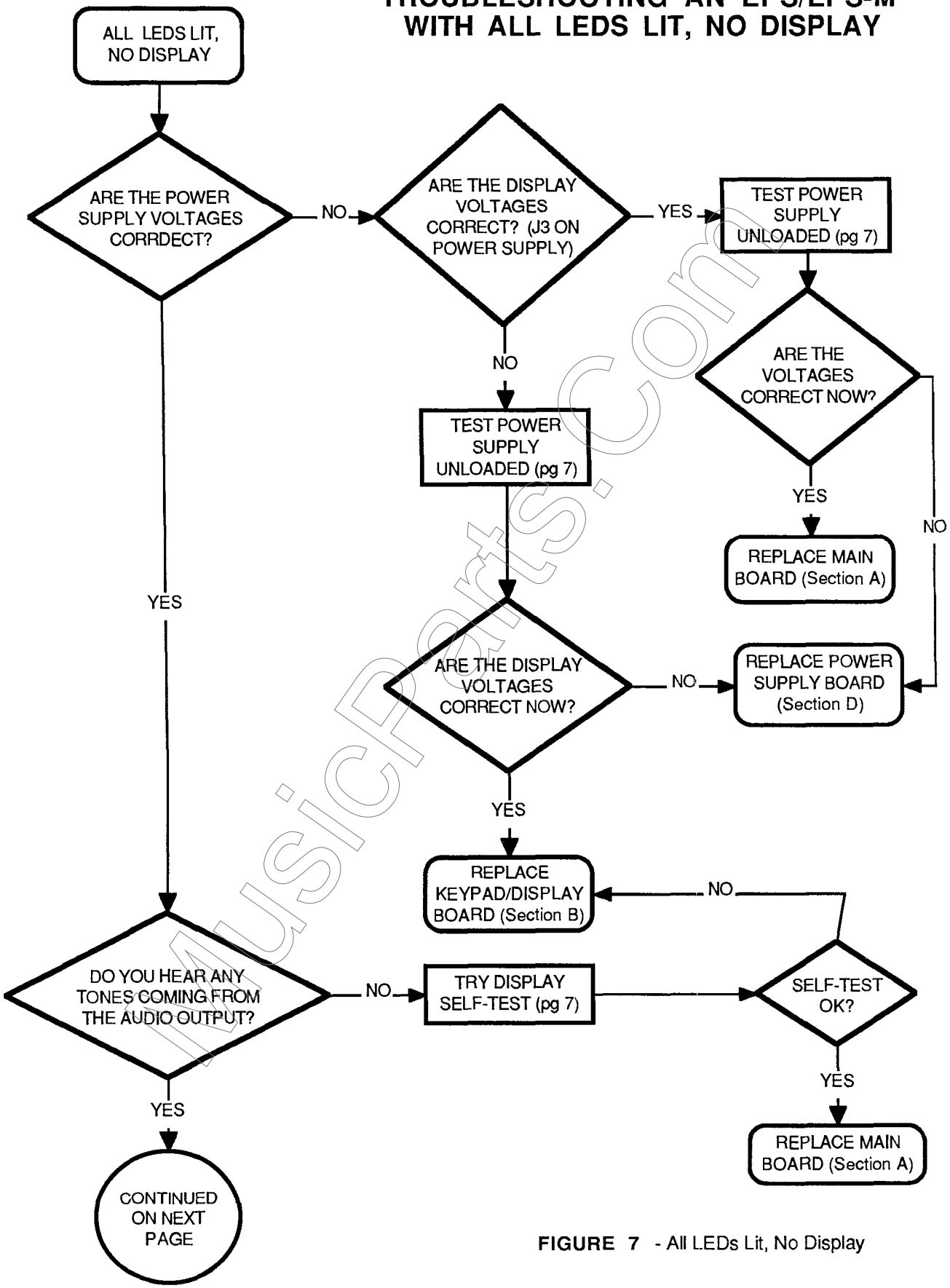

FIGURE 7 - All LEDs Lit, No Display

MusicParts.com

ALL LEDS LIT, NO DISPLAY CONTINUED

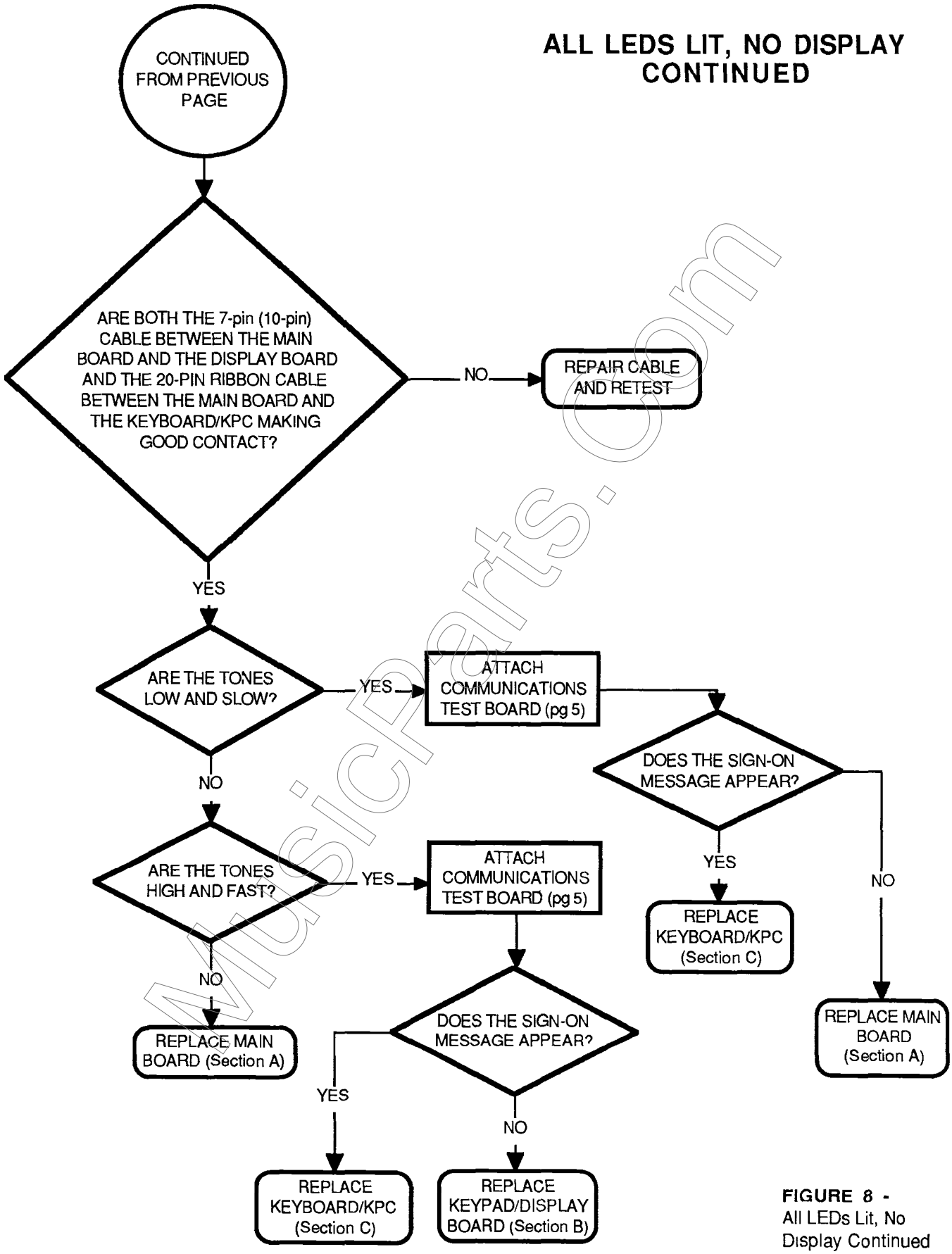

FIGURE 8 - All LEDs Lit, No Display Continued

MusicParts.com

EPS/EPS-M DIAGNOSTICS

A number of EPS's have been incorrectly diagnosed as having a faulty main board when the real problem was a faulty power supply. The following are the most common problems which could be caused by a faulty power supply:

1. **Problem**: Hum or buzz in audio output; EPS crashes randomly; or problems develop after inserting a memory expander.
   Solution: Check the voltages on the power supply at **J4** with the power supply loaded (main board and display board connected). Using pin 11 as ground (see **Figure 3**), the voltages on pins 14, 16, and 18 (of **J4**) should be +4.75 to +5.25 VDC. The AC ripple on these pins should be less than 50mV. If the voltages are not within this range or the AC ripple is greater than 50mV, replace the power supply.

2. **Problem**: EPS is dead on power up.
   Solution: Perform solution 1 above. If no problem is found, check the voltages on the power supply at **J3**. Using pin 23 as ground (see **Figure 3**), the voltages on pins 27 and 28 (of **J3**) should be -22.7 to -31.5 VDC. If the voltages are not within this range, replace the power supply. If no problem is found, check the voltage at pin 25 (of **J3**). It should be -29 to -37.2 VDC. If the voltage is not in this range, replace the power supply.

3. **Problem**: EPS has disk drive loading problems.
   Solution: Perform solution 1 above. If no problem is found, check the voltages on the power supply at **J2**. Using pin 11 of **J4** as ground (see **Figure 3**), the voltage on pin 22 (of **J2**) should be +11.4 to 12.6VDC. The AC ripple on this pin should be less than 50mV If the voltage is not within this range or the AC ripple is greater than 50mV, replace the power supply.

The following are other common problems:

4. **Problem**: After executing the LOAD command, the EPS locks up.
   Solution: Use the Communication Test Board to check the Keyboard/KPC. We usually find this problem is caused by a defective Keyboard/KPC.

5. **Problem**: Chronic Disk Drive error messages such as DATA CORRUPTED, DISK ERROR, NOT AN EPS DISK or DISK NOT IN DRIVE.
   Solution: Some drives may have had a half inch square metal plate fall out of them as a result of a glue problem. This plate could be loose inside the EPS. Find and remove the plate to prevent it from shorting components. Remove the Disk Drive (see Section H) and check the datecode on the label on the top side of the drive. The correct glue was used on those drives which have a bar above the datecode (regardless of the datecode).

   Replace the drive if:
   - the datecode is *lower* than 8801, or
   - the datecode *is* 8801 *and* the serial number label on the side of the drive is *lower* than 1035801.

MusicPartsCo

MOST COMMONLY ASKED USER QUESTIONS

The following questions are the most commonly asked by end users. Our Customer Service Representatives (CSR) resolve these situations over the telephone daily.

Question: How do I Mix a Track or a Song?

CSR: You must use EPS O.S. Version 1.95 or higher, as follows:

Sequences (Tracks)

1) Set RECORD MODE to ADD
2) Select the Instrument•Track
3) Press *Edit* then *Track*, scroll left to MIX
4) Set mix to the desired value
5) Hold *Record* and press *Play*
6) Let the Sequencer play one bar
7) Press *Stop*
8) Answer *Yes* to KEEP=OLD - NEW

In Song Mode

1) Chain sequences into a Song
2) Set RECORD MODE to ADD
3) Select the Instrument•Track
4) Press *Edit* then *Track*, scroll left to MIX
5) Hold *Record* and press *Play*
6) Mix Track through entire Song using the Data Entry Slider or the CV Pedal with PED=VOL
7) Answer *Yes* to KEEP=OLD - NEW

Question: The EPS will not record a sequence from external sequencer in MULTI mode.

CSR: The EPS Sequencer will only record one track at a time. The EPS Sequencer will not record incoming MIDI events when the MIDI IN MODE is set to MULTI Mode. When transferring a sequence into the EPS, record one Track at a time on the EPS Base Channel. Set up each track of the sending device on a different MIDI channel. (*Example: TRACK1= CHAN1; TRACK2= CHAN2; etc.*) For each Track you transfer, first select the appropriate Instrument•Track on the EPS, then set the EPS Base Channel to the channel of the Track you want to transfer.

Question: Why won't the EPS let me edit converted Mirage sounds?

CSR: WS=1 contains the actual wavesample information for the Lower sound, WS=17 for the Upper. All other wavesamples (30 of them) are copies of WS=1 or WS=17. Therefore, isolate the desired wavesample(s) as follows:

1) Create a new Instrument
2) Create a new Layer in that Instrument
3) Copy desired wavesample into the new Layer
4) Truncate the new wavesample
5) Edit as you wish

Question: When appending a track using O.S. Version 2.2 (or higher), the display may read TRACKS NOT TRANSFERRED. When listening to the appended version, you realize that the EPS has only transferred some tracks.

CSR: There was not enough memory in the EPS to append all tracks. Therefore, only some of the tracks were transferred. Either edit your sounds to free up some memory or select sounds that use fewer blocks.

Question: Why do some other manufacturer's instruments crash when played from an EPS keyboard?

CSR: These instruments cannot handle the vast amount of MIDI data that Poly-Key generates. Turn the key pressure settings to CHAN or OFF on MIDI and each INSTRUMENT, as follows:

1) Press *Edit*, then *MIDI*
2) Scroll to BASECHANNEL PRESSURE=KEY
3) Change it to CHANNEL or OFF
4) Press *Edit*, then *Instrument*
5) Scroll to PRESSURE MODE=KEY
6) Change it to CHANNEL or OFF

MusicParts.Com

EPS/EPS-M TEST PROCEDURE

The following procedure will ensure the thorough testing of the EPS/EPS-M and will also aid in troubleshooting the unit. To perform the following tests you will need a MIDI cable, a Dual Footswitch, and a Control Voltage (CV) Pedal. The EPS/EPS-M should be connected to a sound system in stereo.

If it is not known whether the Keypad/Display board is good, it can cause confusion in tracking down the problem. If you do not have known-good correlation modules and suspect a Keypad/Display problem, you should test this module first (see **Using Self-test Mode...,** page 8).

1. **Power Up** (see page 9 of the EPS *Musician's Manual* for more information)
   a. Turn unit on. All the red and yellow LED's above the Instrument•Track buttons should light and the display should read ENSONIQ EPS, then PLEASE INSERT DISK.
   b. Insert Test disk. The display should read LOADING SYSTEM. The EPS will then display TUNING KBD - HANDS OFF When the keyboard is tuned, all LEDs should go out.

2. **Load in Sounds** (see page 10 of the EPS or EPS-M *Musician's Manual*)
   a. Load in ROCK PIANO from the Test disk (press *Enter•Yes,* then Instrument•Track button #1). The display will say LOADING <filename> and the red LED for Instrument•Track #1 will blink The file is done loading when the display briefly shows FILE LOADED and the red LED stays on.
   b. Load LEGATO FLUTE into Instrument•Track #2.
   c. Select ROCK PIANO by pressing Instrument•Track button #1 (the yellow LED will light).

3. **Sound Check**
   Using ROCK PIANO, play a bit to check sound quality. Play up the keyboard to verify that the ROCK PIANO pans from left to right. Hold the sustain pedal down and play ten notes, listen carefully for distorted voices (ROCK PIANO has two layers).

4. **Keyboard Test (EPS Only)**
   Select LEGATO FLUTE (Instrument•Track #2), press each key down only until normal key travel ends. Do not press into the pressure zone Verify that no pressure effect occurs. Continue to press the key into the pressure zone and verify that pressure causes vibrato. **NOTE**: This sound is monophonic
   * **Failure indicates a Keyboard problem.**

5. **Mono Output and Headphone Test (EPS Only)**
   a. Unplug the *Left/Phones* output cable and verify that both the high and low end of the keyboard are heard in the RIGHT output (there will be no output from the left).
   b. Unplug the *Right/Mono* output cable and plug headphones directly into the *Left/Phones* jack.
   c. Play a few notes to check for stereo.
   * **Failure indicates a Main Board problem.**

6. **Mono Output and Headphone Test (EPS-M Only)**
   a. Alternately unplug the *Left/Mono* and *Right/Mono* output cables and verify that the output is in MONO.
   b. Plug headphones directly into the *Headphones* jack.
   c. Play a few notes to check for stereo.
   d. Reconnect the audio cables.
   * **Failure indicates a Main Board problem.**

7. **MIDI Test (EPS Only)**
   a. Connect *MIDI In* to *MIDI Out* with a MIDI cable.
   b Hold down a few keys.
   d. Disconnect one end of the MIDI cable
   d. When you release the keys, the notes should sustain.
   e Play twenty or more keys simultaneously to re-initialize the voices.
   * **Failure indicates a Main Board problem.**

MusicPartsCom

8. **Disk Check**
   a. Select a sound to save back to disk. Press *Command*, and double-click on the *Instrument* button. The display shows SAVE INSTRUMENT, press *Enter•Yes*.
   b. The display will show NAME=<filename> Press down arrow to change the name Press *Enter•Yes*. The display will show SAVING <filename>. The message DISK COMMAND COMPLETE will appear briefly when finished. (If you save the same sound more than once, the display will ask UPDATE OLD FILE? Answer appropriately)
   * **In case of failure, check the components in the following in order: 1) disk, 2) disk drive cables, 3) Disk Drive, and 4) Main Board.**

9. **Footswitch Tests**
   a Plug the Dual Footswitch into the *Ft. Sw.* jack on the back of the EPS/EPS-M.
   b. Create a short sequence by pressing *Record* and *Play* at the same time Use the sustain (right) pedal to verify that sustain works, then stop the sequencer using the sequencer (left) pedal Press *Cancel•No*

If one or both of the footswitches do not operate properly, make sure that the footswitches are set to the proper mode as outlined on page 50 of the EPS *Musician's Manual* The above test assumes that the left pedal is set for sequencer control and the right pedal is set for sustain (this is the default). It is possible to set the left footswitch to act as a sequencer control switch or as the left Patch Select Button and the right footswitch to act as a sustain pedal or as the right Patch Select Button

If the footswitch mode is correct and the footswitch still doesn't function properly, there is either a problem with the Main Board, the Keyboard/KPC or the 20-pin ribbon cable connecting the two Although the footswitch jack is mounted on the Main Board, the footswitch signals are carried over to the Keyboard/KPC by the 20-pin ribbon cable, where they are sensed by the Keyboard/KPC microprocessor

Attach the Communications Test Board as described on page 5. This eliminates the Keyboard/KPC as an unknown Boot the system up normally. On an EPS, the Keyboard will fail calibration (because there is no keyboard attached to calibrate) Press *Cancel•No* in response to the KBD FAILED-TRY AGAIN? message. Set both footswitches to act as patch select buttons as described on page 50 of the EPS *Musician's Manual* Load in and select ROCK PIANO, press *Edit*, then *Instrument* Pressing either footswitch should cause the appropriate patch indicator to appear in the leftmost two characters of the display.

If the indicators appear with the Communications Test Board installed, but not when the Keyboard/KPC is used, the Keyboard is at fault. If the indicators don't appear even when the Communications Test Board is used, the Main Board is at fault

MusicParts.com

10. Analog Test Page

a. Go to the Analog Test Page (press *Command*, *Env 1*, scroll right until EXAMINE ANALOG INPUTS is displayed, then press *Enter•Yes*).

b Examine the analog inputs using the following procedure:
Press the *Up Arrow* button to select the appropriate input, then press *Enter•Yes* to take a reading. Verify that the values are as follows:

	Fully down	Fully up		
PITCH WHEEL	0	127	center = 64	**(EPS-M - N/A)**
MOD WHEEL	0	127		**(EPS-M - N/A)**
VOLUME (slider)	0	255		
PEDAL (CV)	0	127	unplugged = 127	

When testing the Data entry slider (Mr Knob), you must scroll right so that the value is underlined. Press *Enter•Yes* to take readings.

MR KNOB (data slider)	0	255

Scroll left then up to test the Patch Select Buttons

PATCH (select buttons)	both up=0	right=32	left=64	both=127

* **These values may differ slightly if you are testing with O.S. Version 1.3 or lower. Be sure to use the latest O.S. to insure proper operation. Failure indicates a problem with the corresponding part, although it could also indicate a Power Supply failure or a Main Board problem. If all readings are off, then it is most likely that there is a problem with the Main Board.**

11. Sampling Test

a Plug the microphone into the *Audio In* Delete ROCK PIANO by pressing and holding down Instrument•Track #1 and pressing *Cancel•No*.

b Press *Sample* and select Instrument•Track #1 for VU meter Scroll right to INPUT LEVEL and set it to MIC, then scroll back to the VU meter. Press *Enter•Yes* and sample by speaking into the microphone You should hear what you are sampling at the Audio Output. Press *Cancel•No* when you are done the sample.

c. Play back the sample and listen critically.

d. Press the *Up Arrow* button once and play the sample in the BACKWARD, NO LOOP mode.

e Unplug the microphone from the *Audio In* jack

* **Failure indicates a Main Board problem. For more information on Sampling, see pages 23-28 of the EPS *Musician's Manual*.**

12. OEX-8

When troubleshooting an EPS with an OEX-8 that is not operating properly, you will need to determine whether the EPS or the OEX-8 is at fault. If possible, try the OEX-8 with another EPS, or try the problem EPS with a different OEX-8 The operation of the OEX-8 can be tested using the following procedure:

a Load and select the sound called 8-OUT TEST.

b. While playing the the same note on the keyboard, listen to each OEX-8 output individually. You should hear a single square-wave tone in each output and the tone in each successive output should be a semitone higher in pitch than the previous output. **Note** that the OEX-8 outputs are not designed to drive headphones directly and should be plugged into a suitable line-level pre-amp such as a mixing board.

* **If the EPS itself is found to be defective, the problem is in the Main Board.**

MusicPartS.com

BURN-IN TEST PROGRAM

In order to run the Burn-in Test Program, you must have the following items:

- One EPS/EPS-M Burn-in Test Disk (ver. 3.0 or higher can be used with either the EPS or EPS-M)
- One MIDI Cable
- One 1/4" Mono to 1/4" Mono cable
- One 1/4" Mono to 1/4" Stereo cable (see **Figure 9** for instructions on how to make this cable).

The Burn-in Test Program is used at ENSONIQ to exercise the system hardware of a complete unit. There are two test operations which the program can perform: 1) A continuous (burn-in) test of all components, and 2) a keypad integrity test.

The continuous operations test the Dynamic RAM, MIDI In/Out, Audio In/Out, Keyboard, Sustain Footswitch, Aux Footswitch and Disk Drive Read and Write. The Disk Drive test is run approximately every ten minutes and takes about five minutes to run. Failures of components can be automatically detected in all operations.

A Mono to Stereo cable:

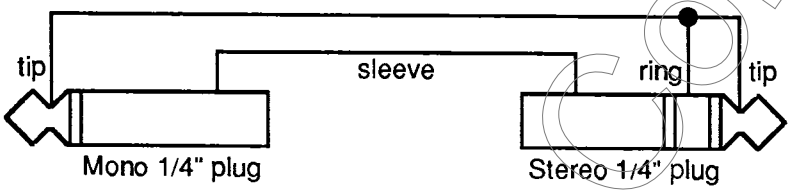

FIGURE 9 - Mono to Stereo Cable Wiring

BURN-IN TEST

1. Plug MIDI Loop Cable into *MIDI In* and *MIDI Out* jacks. Plug the Mono to Mono cable into the *Audio In* and *Right* jacks. Plug the Mono to Stereo cable into the *Left* (mono side) and *Ft. Sw.* (stereo side) jacks.
2. Power up the unit and insert the BURN-IN TEST DISK VER. X.X (version 3.0 or higher can be used with either the EPS or the EPS-M), making certain that the disk is not write-protected (i.e., the window must be closed).
3. Once the disk has been loaded, the display will read: DISK TEST COUNT XXX. If no buttons are pressed the Burn-in Test cycle will begin automatically after twenty seconds.

NOTE: The "Disk Test Counter" is used to automatically monitor test disk usage and to indicate when a test disk becomes unreliable. The "counter" is increased by one every time a DISK WRITE test is done. After about two weeks of continuous Burn-in Testing, the "counter" will reach its limit, and the disk will not boot the system properly. Instead, the display will read: DISK NO LONGER USABLE. Contact ENSONIQ Customer Service for a replacement disk.

4. Press *Enter•Yes*. The display will read: DO BUTTON TEST ?

NOTE: If you wish, press *Cancel•No* to by-pass the Button and Display tests and immediately begin the Burn-in Test cycle. The display will read: OK-HIT ENTER TO START. Go to Step 9 to start the Burn-in Test cycle.

5. Press *Enter•Yes*. All the special segments on the left side of the display will light and the display will read: LEFT SIDE ON-HIT ENTER.
6. Press *Enter•Yes*. All the special segments on the right side of the display will light and the display will read: RIGHT SIDE ON-HIT ENTER.
7. Press *Enter•Yes*. All the red and yellow LEDs will light and the display will read: LEDS ALL ON-HIT ENTER.
8. Press *Enter•Yes*. The display will read: PRESS EVERY BUTTON. Press all the control panel buttons in any order. All the LEDs will flash as each button is pressed (don't forget to press the eight Instrument•Track buttons). Once all the buttons are pressed, the display will read: OK-HIT ENTER TO START.
9. Press *Enter•Yes* to start the Burn-in Test cycle. As the Burn-in Test runs, the display will indicate which of the tests is currently active. If the Dynamic Ram is being tested, for example, the display will read TESTING DYNAMIC RAM.

MusicPartsOnly.com

BURN-IN FAILURE MODES

1. If there is a failure in any of the tests, the special segments in the display and the control panel LEDs will flash alternately. The test cycle will continue.
2. To determine which test has failed, press *Cancel•No* repeatedly until the display indicates the PASS/FAIL STATUS mode. If the Dynamic Ram has passed, for example, the display will read DYNAMIC RAM GOOD.
3. Pressing any of the arrow keys will cause the program to page through and display the pass/fail status of each of the eight tests. Once the failed test has been located, you can clear the pass/fail status mode by pressing *Cancel•No*. This should be done ONLY as a diagnostic function. Once all failure status indicators have been cleared, press *Enter•Yes* to restart the Burn-in Test cycle at the displayed test.

Failed Test	Likely Problem
DYNAMIC RAM	Main Board
MIDI IN/OUT	Check cable continuity and cable insertion, Main Board
AUDIO IN/OUT	Check cable continuity and cable insertion, Main Board
KEYBOARD	Keyboard cable, Keyboard
SUSTAIN FOOTSWITCH	Check cable continuity and cable insertion, Main Board, Keyboard
AUX FOOTSWITCH	Check cable continuity and cable insertion, Main Board, Keyboard
DISK READ	Test Disk, Disk Drive cable, Disk Drive, Main Board
DISK WRITE	Test Disk, Disk Drive cable, Disk Drive, Main Board

---

HARDWARE NOTES (EPS Only)

1. **Main Fuse**
   On units with serial numbers beginning with approximately 10170 (100/115V) and *500011* (*220/240V*), the main fuse was changed from a 1.0 Amp to a 1.5 Amp. If you replace a 1 0 Amp fuse with a 1.5 Amp, be sure to correct the fuse label on the back of the unit with a permanent marker.

2. **Power Supply Fuses**
   To reduce the occurrence of fuse failure when a memory expander is installed, fuses F3 and F4 were changed from 3.0 Amp to 4.0 Amp. Units with serial numbers beginning with approximately 11580 (100/115V) and *500695* (*220/240V*) have this change. If you replace a 3.0 Amp fuse with a 4.0 Amp, be sure to correct the fuse label above the Power Supply with a permanent marker.

3. **Eight Output Expander, OEX-8**
   a. **CAUTION!!! IMPORTANT!!!**
      The 9-pin connector on the rear panel of the EPS should only be used to connect the OEX-8 Output Expander to the unit. This connector does not simply supply audio outputs and signal ground and, therefore, cannot be used to generate separate outputs without the OEX-8. The EPS generates a multiplexed audio waveform which must be distributed and filtered externally. The signals present on this connector include differential multiplexed audio, de-multiplexing control signals and +/- 12 VDC. Improper connections to these signals could easily damage the EPS or any external device connected. The OEX-8 should never be plugged in or unplugged with the EPS power on, as this could damage the EPS.
   b. **Connectors**
      On some early EPS systems (prior to serial number 11220 (100/115V) and *500575* (*220/240V*) the Output Expander connector could be defective. If you have a problem with an OEX-8 when used with an EPS in this serial number range, the Main Board may need to be replaced.

www.cats.com

4. The 7501 Main Board and the 10002 Main Board

ENSONIQ is now using a new version of Main Board in the EPS. The 10002 board is basically a new layout of the 7501 Main Board with the tower board included, the new square gate array chip replaces several individual chips, and it uses a different size RAM chip. When replacing a main board, you should replace it with the same version that is in the unit. **Replacing a 7501 Main Board with a 10002 board should be done only when 7501 main boards are not available to you.** The 10002 board has all of the connectors (except the disk drive connector, **J2**) in a different place from the 7501 board. If you must replace a 7501 Main Board with a 10002 Main Board, three cables must be replaced. **Do not attempt to switch boards without acquiring these cables from ENSONIQ Customer Service:** Keyboard Cable, Main Board Power Cable (attached to main harness), and SCSI Cable (if applicable).

a. Remove the 7501 main board as described in EPS **Section A**.
b. Clip the four wire ties that hold the Main board Power Cable (9-pin) to the main harness. Discard this cable.
c. Insert the new 10002 main board as described in EPS **Section A**.
d. Attach the *new* main board power cable to the power supply at **J4** and to the main board at **J10**.
e. Reconnect the cables to the display board (**J8**), wheels (**J9**), and disk drive (**J2**).
f. Use two wire ties to bundle the *new* main board power cable out of the way. NOTE: Leave the wheels cable out of the wire ties.
g. If applicable, install the *new* longer SCSI cable (the 34-pin ribbon cable from the SCSI board to the auxiliary expansion, **J6** on the main board).
h. Replace the existing keyboard cable on the keyboard with the new longer keyboard cable.
i. Re-install the keyboard as described in EPS Section C.
j. For best results, boot the unit with the latest O.S. disk (2.35 or higher).

HARDWARE NOTES (EPS-M Only)

1. Bootup ROM

Units with serial numbers of 10075 or lower contain version 2.11 bootup ROM. These units will crash when program changes are received and TRANSMIT ON=INST CHAN. To update these units, contact ENSONIQ Customer Service.

MusicPartsCom

SOFTWARE NOTES

Error Messages

Any error message means that there is a problem. These messages were designed for our software debug and are not very helpful for anything else. The error messages that are helpful to you are error 18 and 144. A bad DOC 2 chip could cause error 18 and a bad keyboard or excessive MIDI data could cause error 144. The errors are as follows:

16	VC (Voice Generator) received unknown message
17	voice list corrupted
32	DUART overrun from MC68HC11
49	PARSER - bad parameter type
56	memory allocation error - getblock
57	memory allocation error - freeblock
63	RAM error (main ram)
64	No SCSI connected
128	bus error
129	odd address error
130	divide by zero error
131	illegal instruction error
132	CHK instruction error
133	TRAPV instruction error
134	privilege violation
135	trace error
136	line 1010 emulator error
137	line 1111 emulator error
138	spurious interrupt
139	unused vector
144	out of system buffers
145	unknown sampling interrupt
192	unknown sequencer event
194	no more sequencer event buffers

The following are changes that were included in O.S. Version **1.1**:

1. **SEQUENCER** - The QUANTIZE TRACK command was repaired. With previous versions, notes were not always properly quantized.
2. **WAVE EDITING** - The function that allowed editing of the fractional loop end amount was repaired in Version 1.1. With Version 1.0, using this function caused FATAL ERROR 018.

The following are changes that were included in O.S. Version **1.2**:

1. **WAVE EDITING** - In previous versions, some WAVE commands could crash the system unpredictably when used in 20-voice mode.
2. **PITCH TABLES** - The system no longer crashes when editing a pitch table with no instruments loaded.

The following are changes that were included in O.S. Version **1.3**:

1. **GENERAL** - This is the minimum O.S. version when ROM Version 1.2 is installed.
2. **WAVE EDITING** - MIX, MERGE and SPLICE commands were potentially fatal in earlier versions. If the two wavesamples were in different instruments, the system would appear to be PROCESSING DATA continuously.

The following are changes that were included in O.S. Version **1.4**:

1. **GENERAL** - This version is more reliable than previous versions and its distribution and use are strongly recommended.
2. **SEQUENCER**
   a. EVENT STEP EDITING - In earlier versions, many aspects of the Step Editing function were either incomplete or caused fatal errors. Some examples are: attempting to delete an event when more than one occurred on the same clock caused fatal errors; setting note duration times was inconsistent and unpredictable; it was impossible to delete events that occurred on the last clock of the last bar of a sequence (this was a problem since the QUANTIZE command puts any unresolved notes of the last beat onto the last clock).
   b. SYNCING TO MIDI - In previous versions, the sequencer would wait for a key to be struck before entering RECORD on the first track when synced to MIDI. The EPS will now enter RECORD when it receives a START message from MIDI.
   c. OVER DUBBING - In previous versions, the EPS system would crash if you tried to overdub a track which contained a lot of controllers.
3. **BANKS** - In previous versions, loading banks more than once in succession did not always produce the same results.
4. **DATA TRANSFERS using ALCHEMY™** - Using O.S. Version 1.3 with Blank Software's ALCHEMY would consistently crash the EPS.

ManualsOnCD.com

5. **SYSEX DATA RECORDER**
   a. SENDING SYSEX DUMPS - In previous versions, sending SYSEX data files only worked properly if the EPS had previously RECORDED a SYSEX data file. If this function was attempted from bootup, it would fail.
   b. BACKING UP SYSEX FILES (NEW FEATURE) - With the release of O.S. Version 1.4, an enhancement has been added which allows multiple copies of SYSEX data files to be saved. After a file is loaded and before the user "quits" from the transfer, the EPS now displays the prompt: RESAVE SYSEX FILE? At this point, the user can re-save the file to a different disk.
6. **PARAMETER EDITING**
   a. EDITING SAMPLE START, END - In previous versions, attempting to change the START, END or LOOP points on extremely small waves (less than 100 samples) would cause SYSTEM ERROR 130.
   b. DATA ENTRY SLIDER - In previous versions, the function that allows you to use the Data Entry Slider to set values to zero did not work consistently on all machines.
7. **CLICKS AND POPS -** In previous versions, clicks and pops were audible when voices were "stolen" during dynamic voice allocation. This was most noticeable when the sustain pedal was held while playing piano-like sounds.
8. **SAMPLING** - With Version 1.3, the threshold level to trigger sampling did not work.

The following are changes that were included in O.S. Version **1.5**:

1. **CLICKS AND POPS**
   a. CLICK DURING KEY DOWN - In previous versions, audible clicks could occur at the start of notes.
   b. NOISE ON SOLO OUT 2 - In previous versions some low level clicking occurred randomly on the second Solo Output.
2. **BANKS** - In previous versions, loading banks would cause the volume of any higher-numbered Instruments which were not loaded as part of the bank to be set to VOLUME=0.

The following are changes that were included in O.S. Version **1.95**:

1. **SEQUENCER**
   a. MIXDOWN (NEW FEATURE) - The sequencer now records the TRACK MIX for each track when it is recorded; in addition, it will record TRACK MIX changes dynamically on SONG tracks.
   b. EVENT STEP EDITING - This command now ignores the SEQUENCE MODE parameter so that when you use step editing in ADD mode, it acts as if you were in REPLACE mode.
   c. INBOUND MIDI WHILE IN PLAY - The sequencer no longer crashes if MIDI information is received (in MULTI mode) on an Instrument that is playing sequence data. The most likely system error was 129.
   d. PUNCH IN - In previous versions, if you used the LOCATE function ("goto") to locate into a new track and then began recording from there, using LOCATE on playback and during audition gave unpredictable results. Fixed in 1.95
   e. SONG POSITION POINTER - The EPS now responds correctly to MIDI song position pointer information.
   f. TRANSMITTING MIDI STOP - The EPS now transmits a MIDI "stop" command when the end of a sequence is reached. Previously, this was sent only if the user pressed the *Stop* button.
2. **SAVING FILES**
   a. SAVING LARGE FILES (NEW FEATURE) - The EPS will now save Instrument files that are larger than the capacity of a floppy disk IF that Instrument is the only file on a disk. Multiple disk files appear with a number appended to the name (for example, "BIG PIANO 1.") to indicate the reload sequence.
   b. SAVING 39 FILES - Trying to save the 39th file to a disk no longer results in a system crash and an unusable disk.
3. **BANKS** - Loading a bank for which one of the Instrument files had been deleted from the disk could cause the system to hang if another Instrument in the bank was a COPY of the deleted Instrument. This has been fixed in 1.95.

manuals.com

The following are changes that were included in O.S. Version **2.00**:

1. **EDITING SOME PARAMETERS** - Parameters with a range of -99 to +99 now respond correctly to data entry slider changes.
2. **LOADING BANKS** - Banks that contained *copied* Instruments are now loaded correctly.
3. **SCSI USAGE** - This is the minimum Operation System version when EPS ROM version 2.0 is installed.
4. **CONVERTING MIRAGE SOUNDS** - An intermittent bug was found that causes the display to be blank when you convert a Mirage disk directly after booting. This was fixed in 2.00.
5. **EVENT STEP EDITING** - This command now ignores the SEQUENCE MODE parameter so that when you use step editing in ADD mode, it acts as if you were in REPLACE mode.

O.S. Version **2.10** makes the SCSI code more reliable.

The following are changes that were included in O.S. Version **2.20**:

1. **SEQUENCER**
   a. The EPS responds correctly to song position pointer messages in SONG mode.
   b. Selecting MIDI Instrument #8 while the sequencer is playing no longer crashes the EPS.
   c. The APPEND SEQUENCE command should work properly; appended tracks no longer lose sync with other tracks.
   d. Entering EVENT EDIT TRACK from within a track no longer plays all of the notes up to that point in the track at once. This caused system error 144.
2. **MIDI**
   a The sustain pedal is transmitted correctly over all MIDI channels.
   b. MIDI Instruments will now play incoming MULTI Mode keys locally.
   c. PRESETS transmit correct MIDI program changes when multiple Instruments are transmitting over one MIDI channel.
3. **SAVING FILES**
   a. Versions 1.95 - 2.10 allowed you to save Sequences, Songs, and Banks when there was not enough room left on the disk, resulting in a partial save and lost data when you tried to re-load the file. This has been fixed in 2.20.
   b. Re-saving a SYSEX file now uses the correct file name; previously, the file was saved using the name of the last-saved file.
4. **EDITING**
   a. Editing layer parameter with LYR=A now works correctly.
   b. Some commands on the Wave page have been made more reliable.
   c. Playing keys while using the CONVERT SAMPLE RATE command no longer results in system error 144.
5. **ALCHEMY** - Version 2.20 works more reliably with ALCHEMY using GET and SEND RANGE commands over SCSI.

The following are changes that were included in O.S. Version **2.30**:

1. **SEQUENCER** - The APPEND function should now be more reliable.
2. **EPS-M** - This is the minimum O.S. version that can be used with the EPS-M.
3. **MIDI** - The EPS now sends out the current state of controllers when you select an Instrument. If the CV pedal is used as a MOD pedal (MIDI Controller #4), the EPS will send the current value of the pedal for Controller #4 and full value ($7F) for Controller #7. If the CV pedal is used as a VOLUME pedal (MIDI Controller #7), the EPS will send the current value of the pedal for Controller #7 and an OFF value ($00) for Controller #4. The Yamaha® TX81Z (and the Roland® MKS20) interprets Controller #4 as Volume. If you want to use ROM factory presets on a TX81Z, you must have a CV pedal plugged in and you should set the pedal to MOD (on the EDIT/System Page).

The following are changes that were included in O.S. Version **2.35**:

1. **SEQUENCER** - The APPEND function should now be more reliable.
2. **GENERAL** - Random distortion and pitch shift that occurred during sampling was fixed.

www.ic-arts.com

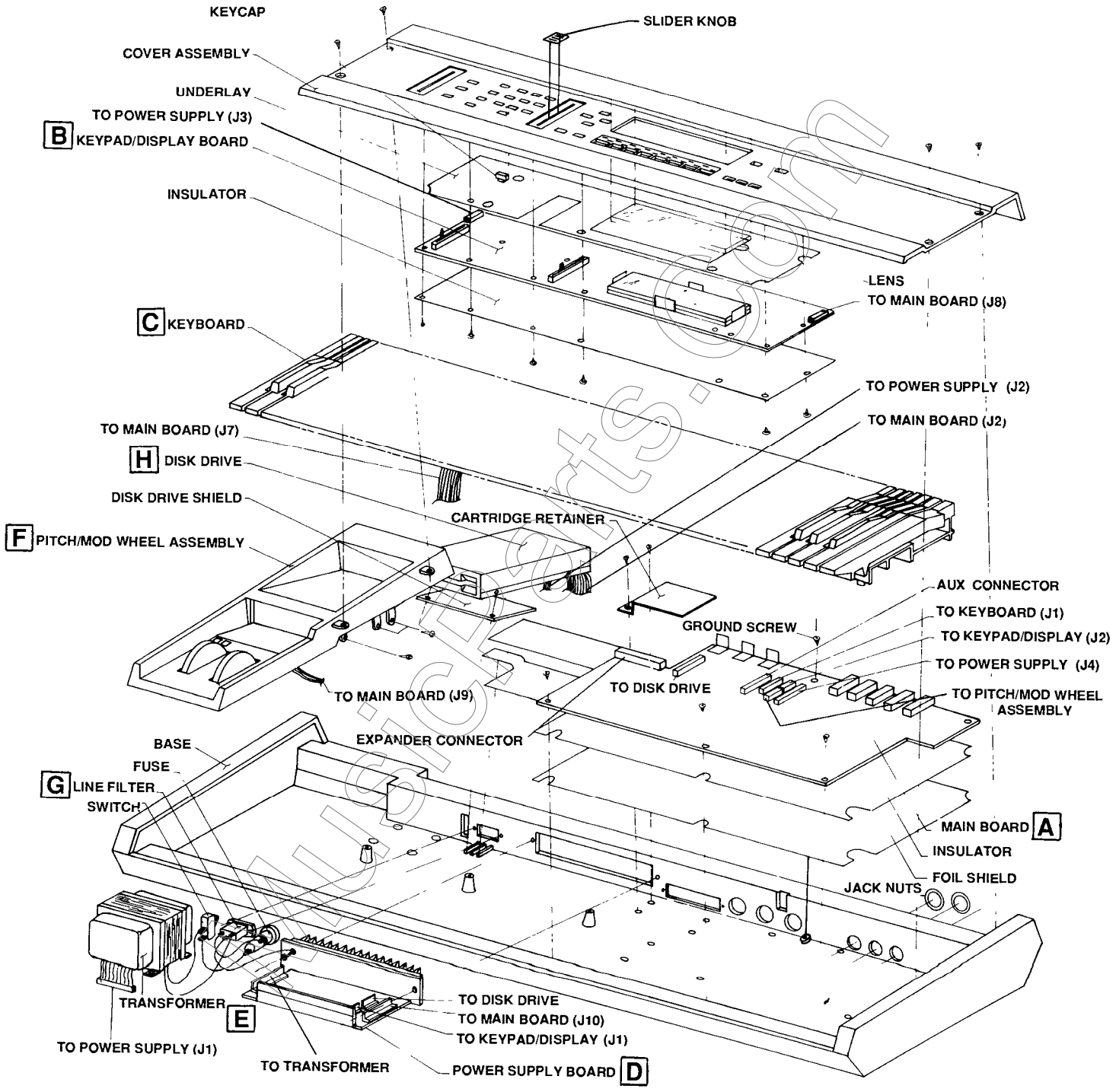

FIGURE 10 - EPS Exploded View

SECTION A

Replacing the EPS Main Board

1. Remove all cables connected to the EPS, including the Power cable.
2. Remove the four (4) screws that fasten the control panel with a 2.5mm hex wrench. **NOTE:** These are machine screws.
3. Remove the Keyboard (see **Section C**). Note that you should remove the 20-pin ribbon cable from the Main Board (at **J7**) instead of from the Keyboard.
4. Raise the control panel and disconnect the Main Harness from the Main Board (**J8**, **J9**, **J10**). Remove the five (5) 15 mm nuts from the rear panel jacks marked *Ft. Sw., Pedal•CV, Left/Phones, Right/Mono* and *Audio In.*
5. Remove the seven (7) self-tapping screws and one ground machine screw with star washer from the Main Board.
6. Before installing the new circuit board, make sure the cardboard insulator is in place.
7. With the board tilted on a slight angle, insert the jacks into the holes in the rear panel. Press the board down and into place.
8. Replace the Main Board screws and secure the jacks with the nuts. Connect the Keyboard, Disk Drive and main harness cables.
9. Re-install the Keyboard (see **Section C**).
10. Power up, test the unit, and close the control panel.

SECTION B

Replacing the EPS Keypad/Display Board

1. Remove all cables connected to the EPS, including the Power cable.
2. Remove the Volume and the Data Entry knobs. Remove the four (4) screws that fasten the control panel and raise the panel with a 2.5mm hex wrench. **NOTE:** These are machine screws.
3. Remove the six-wire cable from the left side and seven-wire cable from the right side of the Keypad/Display board. **Note** that these cables are keyed.

IMPORTANT! The individual colored buttons are held in place only by the Keypad/Display board underlay. Make sure the control panel is open all the way in order to prevent the buttons from falling out when the board is removed. If they do fall out, see **Figure 11** for button color placement.

4. Remove the fourteen (14) screws that hold the Keypad/Display in place and carefully remove the Keypad/Display. Remove the cardboard insulator that covers the bottom of the Keypad/Display board.
5. To re-assemble, first make sure that the underlay and all the buttons are in place and that the lens is clean and in its proper position.
6. Install the new Keypad/Display board with the cardboard insulator using the fourteen (14) screws. Re-connect the two cables paying particular attention to the polarity. Re-install the knobs on the Data Entry and Volume sliders.
7. Power up, test the unit, and close the control panel.

MusicPorts.com

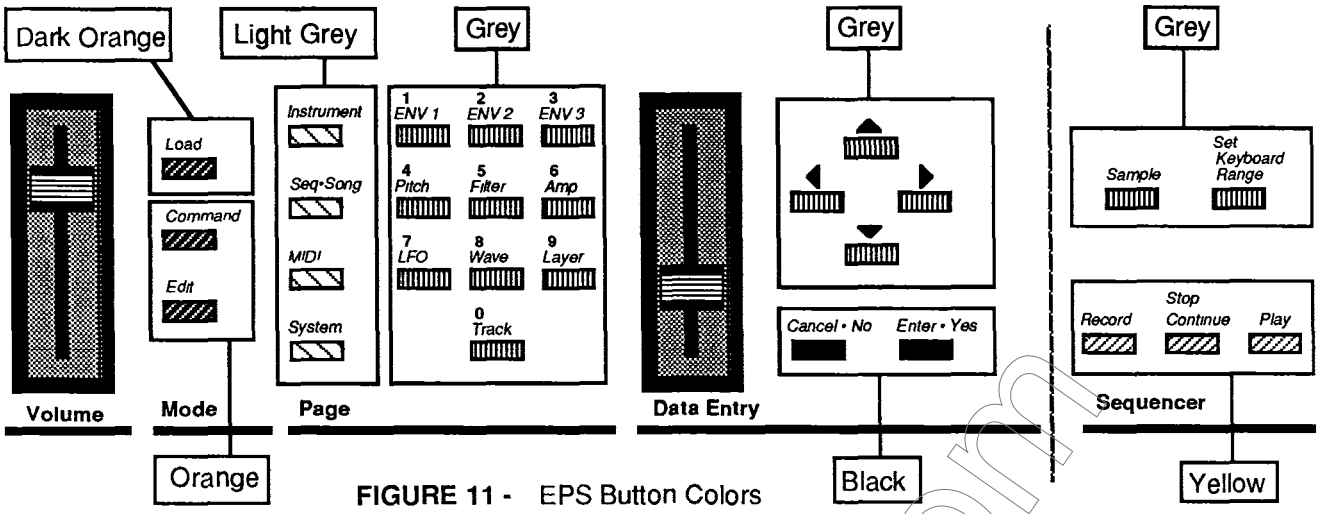

FIGURE 11 - EPS Button Colors

SECTION C

Replacing the EPS Keyboard

1. Remove all cables connected to the EPS, including the Power cable.
2. Remove the four (4) screws that secure the control panel with a 2.5mm hex wrench. **NOTE:** These are machine screws.
3. Place the unit upside down on a soft surface and remove the ten (10) screws that attach the Keyboard to the case. See **Figure 12** for location of screws.
4. Carefully turn the unit right side up. Raise the control panel and disconnect the Keyboard Ribbon cable (**J7**) from the Main Board, paying particular attention to the polarity.
5. Remove the Keyboard from the case by gently lifting up the front of it while pulling it toward the front of the unit. Once the rear of the Keyboard has cleared the control panel mounting tabs, the Keyboard can be removed from the Keyboard cavity. (See **Important Things to Know - The Keyboard**, page 2.)
6. While paying particular attention to polarity, remove the Keyboard Ribbon cable from the old Keyboard and install it on the new Keyboard.
7. Connect the Keyboard Ribbon cable to the Main Board. Be sure that the cable lies flat beneath the Keyboard and is not pinched under the Keyboard frame.

IMPORTANT! If the ribbon cable is mis-pinned, fuses F3 and F4 on the power supply will be blown.

8. Insert the new Keyboard rear first into the unit at the front of the Keyboard cavity. Gently slide the Keyboard toward the rear of the unit, lowering the front of the Keyboard as needed to clear the control panel mounting tabs.

IMPORTANT! Make sure the Disk Drive ribbon cable is not caught under the Keyboard standoffs.

9. Turn the unit upside down on a soft surface and replace the ten (10) screws that secure the Keyboard to the case.
10. Power up, test the unit, and close the control panel.

MusicRadio.com

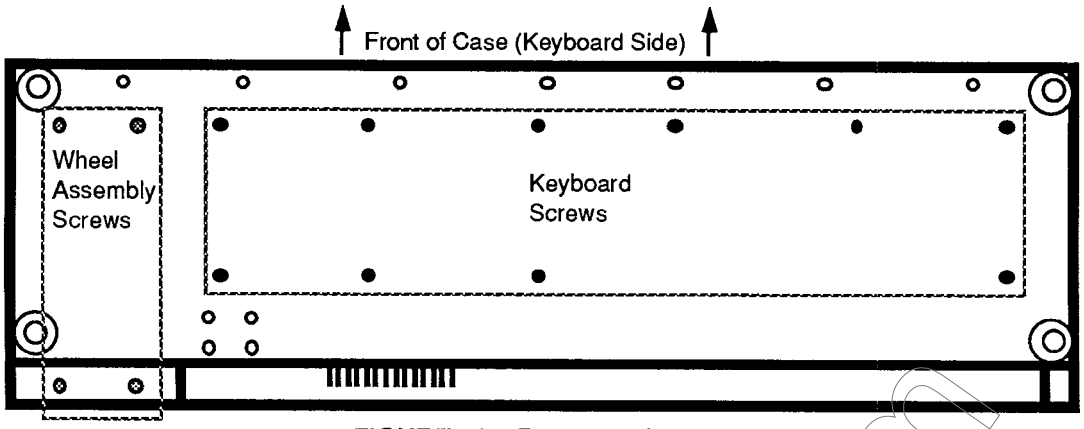

FIGURE 12 - Bottom of Case

SECTION D

Replacing the EPS Power Supply Board

1. Remove all cables connected to the EPS, including the Power cable.
2. Remove the four (4) screws that fasten the control panel with a 2.5mm hex wrench. **NOTE:** These are machine screws.
3. Disconnect the 9-pin connectors (**J1**, **J4**), the 6-pin connector (**J3**), and the 4-pin connector (**J2**) from the Power Supply Board. Note that these connectors are keyed.
4. Remove the two (2) screws and nuts that secure the Power Supply to the case (note that there are star washers on each screw). There is a ground wire leading from the Line Filter to a screw on the finned heat sink. Remove this wire from the Line Filter.
5. Remove the Power Supply board by pulling the front of the board toward the Keyboard and then lifting it up so that the finned heat sink clears the case.
6. Before replacing the Power Supply board, first make sure that the cardboard insulator is in place. The standoffs are intended only for support and should not be stuck down to the case.
7. Insert the replacement Power Supply Board from the inside of the case, finned heat sink first. Lift the finned heat sink from the outside of the case so that it is centered in the opening.
8. Re-install the Power Supply screws and star washers and be sure to connect the ground wire to the Line Filter. Carefully re-connect the four cables, paying particular attention to the alignment of pins and connectors.
9. Power up, test the unit, and close the control panel.

SECTION E

Replacing the EPS Transformer

Due to problems that may occur with the plastic case, all units that need the Transformer replaced should be sent back to the factory. Contact your distributor if you are located outside the U.S.

MusicPro's.com

SECTION F

Replacing the EPS Pitch/Mod Wheel Ass'y

The Pitch and Mod Wheels are replaced as an assembly along with the main harness cables.

1. Remove all cables connected to the EPS, including the Power cable.
2. Remove the four (4) screws that fasten the control panel with a 2.5mm hex wrench. **NOTE:** These are machine screws.
3. Place the unit upside down on a soft surface and remove the four (4) screws that attach the Wheel Assembly to the case. See **Figure 12** for location of screws.
4. Return the unit to an upright position. Raise the control panel and cut the wire ties that hold the wire harness to the chassis. Disconnect the main harness from the Main Board, the Power Supply, and the Keypad/Display. Note that these connectors are keyed and have connector locks. Carefully lift the Wheel Assembly out of the case.
5. Disconnect the cables from the Disk Drive, paying particular attention to the polarity.
6. Remove the Disk Drive and place it into the new assembly as described in **Section H.** Re-attach the Disk Drive cables.
7. Connect the new wire harness to the Main Board (**J8**, **J9**, **J10**), to the Power Supply (**J2, J4**), and to the Keypad/Display (right hand side) paying particular attention to the alignment of pins and connectors Reconnect the wire harness to the case using wire ties.
8. Re-attach the Wheel Assembly to the case using the four screws.
9. Power up, test the unit, and close the control panel.

SECTION G

Replacing the EPS Line Filter

1. Remove all cables connected to the EPS, including the Power cable.
2. Remove the four (4) screws that fasten the control panel with a 2.5mm hex wrench. **NOTE:** These are machine screws.
3. Remove the three (3) wire tabs connected to the back of the Filter, paying particular attention to the polarity.
4. Remove the two (2) screws and nuts that secure the Filter to the case. Note that there are star washers on the inside only.
5. To replace the Line Filter, first make sure that the foil shield is in place. Install the new Line Filter from the outside of the case. The foil shield should make contact with the bottom of the new Line Filter.
6. Re-connect the three wires to the Filter, again noting the proper polarity.

IMPORTANT! Failure to connect the wires to their proper posts can lead to a potential shock hazard (see **Figure 2**).

7. Power up, test the unit, and close the control panel.

MicroParts.com

SECTION

H

Replacing the EPS Disk Drive

1. Remove all cables connected to the EPS, including the Power cable
2. Remove the four (4) screws that fasten the control panel with a 2.5mm hex wrench **NOTE:** These are machine screws.
3. Turn the unit over, top down, and remove the four (4) screws that attach the Wheel assembly to the case. See **Figure 12** for location of screws. Return the unit to an upright position and raise the control panel. Carefully lift the wheel assembly out of the case.
4. Disconnect the two cables from the Disk Drive, paying particular attention to the polarity. (See **Important Things to Know - The Disk Drive**, page 2).
5. Remove the four (4) screws and star washers that attach the Disk Drive to the wheel assembly.
6. Carefully slide the Disk Drive out of the wheel assembly. Remove the two (2) screws and star washers that attach the metal plate to the bottom of the Disk Drive.
7. Immediately place defective drive in the anti-static bag that the new drive came in. Attach the metal plate to the new Disk Drive using the two screws and star washers. (See **Important Things to Know - The Disk Drive** page 2).
8. Slide the new Disk Drive into place and mount it using the four screws and star washers Reconnect the two cables, paying particular attention to the alignment of pins and connectors.
9. Re-attach the wheel assembly to the case using the four screws.
10. Power up, test the unit, and close the control panel.

MusicParts.com

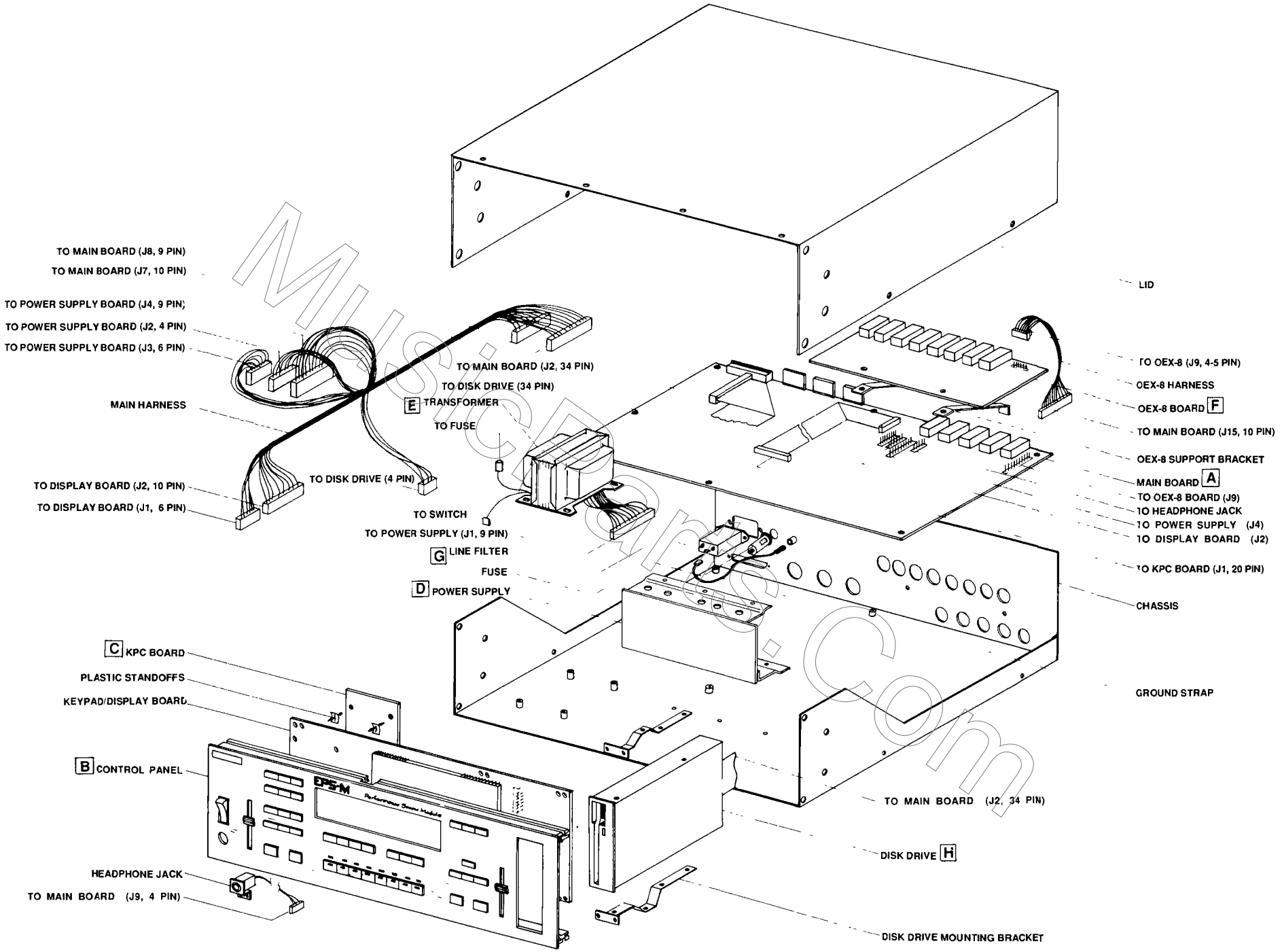

FIGURE 13 - EPS-M Exploded View

SECTION

A

Replacing the EPS-M Main Board

1. Remove all cables connected to the EPS-M, including the Power cable.
2. Remove the lid (see **below**). Remove the OEX-8 board (see **Section F** steps 3 through 6).
3. Remove the five (5) 14mm nuts from the rear panel jacks marked *Audio In, Right, Left, Pedal•CV*, and *Ft. Sw.*
4. Remove the seven (7) machine screws with star washers from the Main Board.
5. Disconnect all cables from the Main Board. Remove the two (2) screws that attach the SCSI connector to the back panel.
6. Before installing the new circuit board, make sure the cardboard insulator is in place.
7. With the board tilted on a slight angle, insert the jacks into the holes in the rear panel Press the board down and into place.
8. Replace the Main Board screws, SCSI connector screws and secure the jacks with the nuts. Re-connect the cables.
9. Re-install the OEX-8 board (see **Section F**) and secure the jacks with the nuts.
10. Power up, test the unit, and re-attach the lid (see **below**).

REMOVING THE LID

1. If the mounting ears are attached to the unit, remove the four (4) screws that hold each of them in place.
2. Remove the two (2) self tapping screws from each side of the unit.
3. Remove the five (5) self-tapping screws from the back of the unit.

IMPORTANT! **Be sure to install all screws into the Control Panel with a hand screw driver to avoid stripping the holes** (see Important Things to Know - page 3).

4. Remove the four (4) self-tapping screws from the top of the unit closest to the control panel.
5. Remove the one (1) machine screw from the top of the unit located about 1" back from the control panel (this screw goes through the disk drive mounting bracket inside the unit). Carefully remove the lid from the unit.

RE-ATTACHING THE LID

1. Install the five (5) self-tapping screws on the back of the unit.
2. Install the two (2) self tapping screws on either side of the unit.
3. Install the one (1) machine screw on the top of the unit located about 1" back from the control panel.
4. Install the four (4) self-tapping screws on the top of the unit closest to the control panel.
5. Install the mounting ears with four screws each (if present).

MicroParts.com

SECTION B

Replacing the EPS-M Control Panel

Due to the variation in switch types on the Keypad/Display boards and button types on the Control Panel: the Keypad/Display board, KPC board, and the Control Panel will be replaced as an assembly.

1. Remove all cables connected to the EPS-M, including the Power cable.
2. Remove the lid (see **Section A**).
3. Remove the two cables from the disk drive, two cables from the keypad/display board, two wires to the power switch, and unplug the headphones cable from the main board.
4. Carefully tip the unit onto its rear panel. Remove the four (4) self-tapping screws from the bottom of the unit closest to the control panel.
5. Remove the one (1) machine screw from the bottom of the unit located about 1" back from the control panel (this screw goes through the disk drive mounting bracket inside the unit).
6. Carefully remove the Control Panel from the unit just enough to unplug the 20-pin ribbon cable from the KPC board.
7. Place the Control Panel face down on a soft surface. Remove the disk drive (see **Section H**) from the assembly.
8. Install the disk drive onto the new control panel (see **Section H**).
9. Reconnect the 20-pin ribbon cable to the KPC board before sliding the new assembly into place (make sure the striped side of the ribbon cable is on pin 1).

IMPORTANT! **Reconnect the 20-pin ribbon cable to the KPC board before sliding the new assembly into place. Be sure to install all screws into the Control Panel with a hand screwdriver to avoid stripping the holes (see IMPORTANT THINGS TO KNOW - page 3).**

10. Install the four (4) self-tapping screws on the bottom of the unit closest to the control panel. Install the one (1) machine screw from the bottom of the unit located about 1" back from the control panel (this screw goes through the disk drive mounting bracket inside the unit).
11. Connect the two cables to the disk drive, two cables to the keypad/display, two wires to the power switch (see **Figure 2**), and plug the headphones cable into the main board paying particular attention to polarity.
12. Power up, test the unit, and re-attach the lid (see **Section A**).

SECTION C

Replacing the EPS-M KPC Board

1. Remove all cables connected to the EPS-M, including the Power cable.
2. Remove the lid (see **Section A**).
3. Remove the control panel (see **Section B**) OR remove the transformer (see **Section E**).
4. Disconnect the 20-pin ribbon cable from the KPC board.
5. Pop the KPC board from the four white standoffs by squeezing the standoffs.
6. Install the new KPC board onto the standoffs making sure the side of the board with the 20-pin connector is closest to the base of the unit.
7. Connect the 20-pin ribbon cable making sure that the striped side is on pin 1.
8. Re-install the control panel (see **Section B**) OR the transformer (see **Section E**).
9. Power up, test the unit, and re-attach the lid (see **Section A**).

MusicParts.com

SECTION D

Replacing the EPS-M Power Supply Board

1. Remove all cables connected to the EPS-M, including the Power cable.
2. Remove the lid (see **Section A**).
3. Carefully tip the unit onto its rear panel. While holding onto the Power Supply board with one hand, remove the three screws from the bottom that attach it to the base.
4. Disconnect the 9-pin cable (**J1**, **J4**), the 6-pin cable (**J3**), and the 4-pin cable (**J2**) from the Power Supply Board. Note that these cables are keyed.
5. Remove the Power Supply board.
6. Insert the replacement Power Supply Board.
7. Re-install the Power Supply screws. Carefully re-connect the four cables, paying particular attention to the alignment of pins and connectors.
8. Power up, test the unit, and re-attach the lid (see **Section A**).

SECTION E

Replacing the EPS-M Transformer

1. Remove all cables connected to the EPS-M, including the Power cable.
2. Remove the lid (see **Section A**).
3. Disconnect the transformer cables to the power supply, line filter, and power switch.
4. Remove the four screws and flat washers that hold the Transformer in place.
5. Insert the new Transformer and attach it to the base using the four screws and flat washers.
6. Re-attach the cables to the power supply, line filter, and power switch.
7. Power up, test the unit, and re-attach the lid (see **Section A**).

SECTION F

Replacing the EPS-M OEX-8 Board

1. Remove all cables connected to the EPS-M, including the Power cable.
2. Remove the lid (see **Section A**).
3. Remove the eight (8) 15mm nuts from the rear panel jacks marked *Solo Outputs 1* to *8*.
4. Disconnect the two cables from the OEX-8 board.
5. Pop the OEX-8 board from the two white standoffs by squeezing the standoffs.
6. Remove the OEX-8 board from the unit.
7. With the new OEX-8 board tilted on a slight angle, insert the jacks into the holes in the rear panel and snap the board onto the standoffs.
8. Re-connect the two cables from the main board. With the front of the unit toward you, the four-pin cable should be attached with the black wire on the left and the five-pin cable should be attached with the purple wire to the left.
9. Secure the jacks with the nuts.
10. Power up, test the unit, and re-attach the lid (see **Section A**).

MusicParts.com

SECTION G

Replacing the EPS-M Line Filter

1. Remove all cables connected to the EPS-M, including the Power cable.
2. Remove the lid (see **Section A**).
3. Remove the three (3) wire tabs connected to the back of the Filter, paying particular attention to the polarity.
4. Remove the two (2) screws and nuts that secure the Filter to the case. Note that there are star washers on the *both* sides.
5. Install the new Line Filter from the inside of the base using the screws, star washers and nuts.
6. Re-connect the three wires to the Filter, again noting the proper polarity.

IMPORTANT! Failure to connect the wires to their proper posts can lead to a potential shock hazard (see **Figure 2**).

7. Power up, test the unit, and re-attach the lid (see **Section A**).

SECTION H

Replacing the EPS-M Disk Drive

1. Remove all cables connected to the EPS-M, including the Power cable.
2. Remove the lid (see **Section A**). Remove the control panel (see **Section B**).
3. Remove the four (4) screws that attach the Disk Drive mounting brackets to the control panel.
4. Disconnect the two cables from the Disk Drive, paying particular attention to the polarity. (See **Important Things to Know - The Disk Drive**, page 2).
5. Remove the four (4) screws that attach the mounting brackets to the Disk Drive.
6. Immediately place the defective drive into the anti-static bag that the new drive came in.
7. Attach the mounting brackets to the new Disk Drive using the four screws.

IMPORTANT! **Be sure to install all screws into the Control Panel with a hand screw driver to avoid stripping the holes** (see Important Things to Know - page 3).

8. Attach the mounting brackets to the control panel trying to use the same holes.
9. Attach the control panel to the base (see **Section B**).
10. Connect the two cables, paying particular attention to the alignment of pins and connectors.
11. Power up, test the unit, and re-attach the lid (see **Section A**).

ensoniq
The Technology That Performs™

In the US: 155 Great Valley Parkway • Malvern, Pennsylvania 19355
Parts Ordering 1-800-441-1003

In Canada: Kaysound Imports, Inc.
2165 46th Avenue • Lachine • Quebec, Canada H8T2P1
Parts Ordering 514-331-8420

CHANGES TO EPS OPERATING SYSTEM VERSION 2.49

DISK DRIVE

The COPY FLOPPY utility on the ***EDIT/System*** page has been fixed.

Removable SCSI drives are no longer surveyed like the internal floppy drive for disk (cartridge) being changed. Since the disk change status will be saved for a SCSI device, changing the disk (cartridge) will still be handled correctly. This prevents MIDI communication problems from occurring when the EPS is being controlled by an external sequencer.

In previous versions, loading banks repeatedly from SCSI drives could cause the system to behave unpredictably. This has been fixed in the current version.

When resaving a multi-disk sound, it was possible to end up with part one saved twice, thereby making it impossible to reload. This has been fixed.

MIDI

Inbound controller #70 (patch select) messages are now handled correctly in MULTI mode. In version 2.40, patch select buttons which were pressed via MIDI were impossible to clear except by rebooting the EPS.

There was a bug in previous versions which caused the machine to behave unpredictably when files were loaded via MIDI commands AFTER a bank load. This has been fixed.

DISPLAY

The PAGE words in the display again indicate the file type during load operations. This function had been disabled in version 2.40.

SEQUENCER

In previous versions, the QUANTIZE operation could move notes near the end of a sequence to the last clock, rather than quantizing them to the nearest note. Sometimes, these notes were not heard. This has been fixed.

There was a bug which made it possible for a SONG file to use much more memory than it actually needed. This has been fixed.

In SONG mode, a newly-recorded song track played back out of time while auditioning, but was OK after a KEEP NEW. This has been fixed so that the track plays correctly in audition.

MusicParts.com

ensoniq®

Service Bulletin #2

December 16, 1988

THIS BULLETIN COVERS:

- **MOST COMMONLY ASKED QUESTIONS ABOUT THE EPS**
- **MOST COMMON EPS HARDWARE PROBLEMS**
- **CHANGES/FIXES MADE IN EPS OPERATING SYSTEM 1.95 AND 2.2**

EPS USER QUESTIONS

The following questions are the most commonly asked by end users. Our Customer Service Representatives (CSR) resolved these situations over the telephone daily. The hardware problems are the most commonly found by our Service Technicians.

Question: How do I Mix a Track or a Song?

CSR: You must use EPS OS Version 1.95 or higher, as follows:

Sequences (Tracks)

1) Set "RECORD MODE" to "ADD"
2) Select the Instrument•Track
3) Press *Edit* then *Track*, scroll left to"MIX"
4) Set mix to the desired value
5) Hold *Record* and press *Play*
6) Let the Sequencer play one bar
7) Press *Stop*
8) Answer *Yes* to "KEEP=OLD - NEW"

In Song Mode

1) Chain sequences into a Song.
2) Set "RECORD MODE" to "ADD"
3) Select the Instrument•Track
4) Press *Edit* then *Track*, scroll left to"MIX"
5) Hold *Record* and press *Play*
6) Mix Track through entire Song using the Data Entry Slider or the CV Pedal with PED=VOL
7) Answer *Yes* to "KEEP=OLD - NEW"

Question: The EPS will not record a sequence from external sequencer in MULTI mode.

CSR: The EPS Sequencer will only record one track at a time. The EPS Sequencer will not record incoming MIDI events when the MIDI IN MODE is set to MULTI Mode. When transferring a sequence into the EPS, record one Track at a time on the EPS Base Channel. Set up each track of the sending device on a different MIDI channel. (*Example: TRACK1=CHAN1; TRACK2=CHAN2; etc.*) For each Track you transfer, first select the appropriate Instrument•Track on the EPS, then set the EPS Base Channel to the channel of the Track you want to transfer.

Question: How come the EPS will not let me edit converted Mirage sounds?

CSR: WS=1 contains the actual wavesample information for the Lower sound, WS=17 for the Upper. All other wavesamples (30 of them) are copies of WS=1 or WS=17. Therefore, isolate the desired wavesample(s) as follows:

1) Create a new Instrument
2) Create a new Layer in that Instrument
3) Copy desired wavesample into the new Layer
4) Truncate the new wavesample
5) Edit as you wish

Question: When appending a track using OS Version 2.2 (or higher), the display may read "TRACKS NOT TRANSFERRED." When listening to the appended version, you realize that the EPS has only transferred some tracks.

CSR: There was not enough memory in the EPS to append all tracks. Therefore, only some of the tracks were transferred. Either edit your sounds to free up some memory or select sounds that use fewer blocks.

Question: Why do the Roland D110 and D20 crash when played from EPS keyboard?

CSR: Turn the key pressure settings to "CHAN" or "OFF" on MIDI and each INSTRUMENT, as follows:

1) Press *Edit*, then *Instrument*
2) Scroll to "PRESSURE MODE=KEY"
3) Change it to "CHANNEL" or "OFF"
4) Press *Edit*, then *MIDI*
5) Scroll to "BASECHANNEL PRESSURE=KEY"
6) Change it to "CHANNEL" or "OFF"

P/N 9360 0076 01

InstPartz.com

Service Bulletin #2

December 16, 1988

HARDWARE PROBLEMS

Problem: After executing the LOAD command, the EPS locks up.
Solution: Use the Communication Test Board to check the keyboard. We usually find this problem is caused by a defective keyboard.

Problem: Chronic Disk Drive error messages such as "DATA CORRUPTED," "DISK ERROR," "NOT AN EPS DISK" or "DISK NOT IN DRIVE."
Solution: Remove the Disk Drive and check the datecode on the label on the top side of the drive. If the datecode *lower* than 8801, replace the Drive. If the datecode *is* 8801, check the serial number label on the side of the drive. If the datecode is 8801 *and* the serial number is *lower* than 1035801, replace the Drive. (Note: There is a half inch square metal plate that fell out of some of these Drives due to inferior glue. This plate could be loose inside the EPS. Find and remove the plate to prevent it from shorting components.)

Problem: Hum or buzz in audio output. EPS crashes randomly.
Solution: Check for AC ripple at +5V and +12V on the power supply. The ripple must be less than *50mv*. If the ripple is greater than *50mv* replace the power supply. If the ripple is less than *50mv* replace the main board.

EPS OPERATING SYSTEM CHANGES

The following problems can be resolved with Operating System Version 1.95 AND 2.2. Remember, updating the EPS is as easy as copying a disk. End users with older Operating System disks should be referred to their local ENSONIQ Dealers for an upgrade. ENSONIQ Dealers have been authorized to copy new Operating Systems for end users who provide their own disk.

PROBLEMS SOLVED IN OPERATING SYSTEM 1.95

- The EPS no longer crashes (display reads "ERROR 129") when selecting MIDI instruments while sequencer is playing.
- Event editing works more reliably. *Example of a problem: After deleting one note you realize that three notes have been deleted.*
- The Song Position Pointer doesn't always point to desired location.

PROBLEMS SOLVED IN OPERATING SYSTEM 2.2

- The Sequencer tempo no longer gets erratic when appending more than twice.
- The EPS no longer crashes when selecting Instrument•Track location 8 button while sequencer is playing.
- The Sustain pedal information is now transmitted correctly over all MIDI channels.

MusicParts.com

ensoniq®

Service Bulletin #3

April 15, 1989

THIS BULLETIN COVERS:

- **EPS DIAGNOSTICS**
- **EPS - THE 7501 MAIN BOARD AND THE 10002 MAIN BOARD**

EPS DIAGNOSTICS

A number of EPS's have been incorrectly diagnosed as having a faulty main board when the real problem was a faulty power supply. The following are the most common problems which could be caused by a faulty power supply:

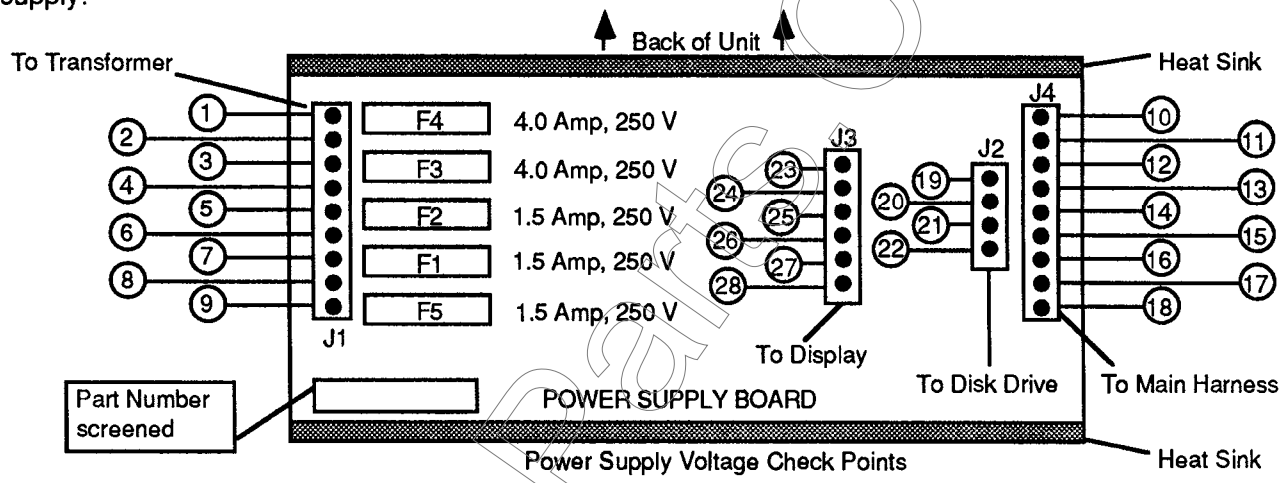

1. **PROBLEM**: Hum or buzz in audio output; EPS crashes randomly; or problems develop after inserting a memory expander.
   SOLUTION: Check the voltages on the power supply at J4 with the power supply loaded (main board and display board connected). Using pin 11 as ground, the voltages on pins 14, 16, and 18 (of J4) should be +4.75 to +5.25 VDC. The AC ripple on these pins should be less than 50mV. If the voltages are not within this range or the AC ripple is greater than 50mV, replace the power supply.

2. **PROBLEM**: EPS is dead on power up.
   SOLUTION: Perform solution 1 above. If no problem is found, check the voltages on the power supply at J3. Using pin 23 as ground, the voltages on pins 27 and 28 (of J3) should be -22.7 to -31.5VDC. If the voltages are not within this range, replace the power supply. If no problem is found, check the voltage at pin 25 (of J3). It should be -29 to -37.2 VDC. If the voltage is not in this range, replace the power supply.

3. **PROBLEM**: EPS has disk drive loading problems.
   SOLUTION: Perform solution 1 above. If no problem is found, check the voltages on the power supply at J2. Using pin 11 of J4 as ground, the voltage on pin 22 (of J2) should be +11.4 to +12.6 VDC. The AC ripple on this pin should be less than 50mV. If the voltage is not within this range or the AC ripple is greater than 50mV, replace the power supply.

MusicRadio.com

Service Bulletin #3

April 15, 1989

THE 7501 MAIN BOARD AND THE 10002 MAIN BOARD

Units with serial numbers 16582 or higher (*240V - 502603*) contain a new version of the EPS Main Board. The 10002 board is a new layout of the 7501 Main Board with: the tower board included; a new square gate array chip that replaces several individual chips; and a different size RAM chip. When replacing a main board, you should replace it with the same version that is in the unit. **Replacing a 7501 Main Board with a 10002 board should be done only when 7501 main boards are not available to you.** The 10002 board has all of the connectors (except the disk drive connector, J2) in a different place from the 7501 board. If you must replace a 7501 Main Board with a 10002 Main Board, three cables must be replaced. **Do not attempt to switch boards without acquiring these cables from ENSONIQ Customer Service:** Keyboard Cable, Main Board Power Cable (attached to main harness), and SCSI Cable (if applicable).

1. Remove the 7501 Main board as described in the EPS Service Manual.
2. Clip the four wire ties that hold the main board power cable (9-pin) to the main harness. Discard this cable.
3. Insert the new 10002 Main Board as described in the EPS Service Manual.
4. Attach the *new* main board power cable to the power supply at J4 and to the main board at J10.
5. Reconnect the cables from the display board (J8), wheels (J9), and disk drive (J2).
6. Use two wire ties to bundle the *new* main board power cable out of the way. NOTE: Leave the wheels cable out of the wire ties.
7. If applicable, install the *new* longer SCSI cable (the 34-pin ribbon cable from the SCSI board to the auxiliary expansion, connector J6 on the main board).
8. Replace the existing keyboard cable on the keyboard with the new longer keyboard cable.
9. Re-install the keyboard as described in the EPS Service Manual.
10. For best results, boot the unit with the latest O.S. disk (2.35 or higher).

MusicParts.com

ensoniq®

Service Bulletin #4

May 15, 1989

THIS BULLETIN COVERS:

- **EPS OUTPUT BOOST MODIFICATION**
  (This modification does not constitute a warranty repair, which means that there is no labor reimbursement from ENSONIQ.)

PURPOSE/BENEFIT

This modification increases the output level of earlier EPS keyboards by 6 dB for a hotter output. The modification also improves the overall signal-to-noise ratio by boosting the output level with respect to the noise floor of the EPS.

WHICH UNITS?

This modification applies only to EPS's with serial numbers prior to 16029 (*220V/240V - prior to serial number 502584*). All EPS keyboards with higher serial numbers incorporate this modification already. This modification applies only to 7501 main boards. The modification involves replacing two resistors and two capacitors on the EPS main board (accessible without removing the main board or keyboard).

EQUIPMENT REQUIRED

1) A 2.5mm hex wrench
2) Small needlenose pliers
3) solder removal braid (such as Soder Wick®)
4) 22 gauge 60/40 rosin-core solder for electronics work
5) A low power (60 watts maximum) soldering iron for electronics work

IMPORTANT: For best results, make sure your area is well lit.

WARNING: Never use a soldering gun or high-wattage soldering iron for electronics work. The excessive heat generated will cause the copper traces to lift up and ruin the circuit board.

WARNING: Never use acid-core solder or solder flux for electronics work. These chemicals will damage the components and the circuit board.

WARNING: Never work inside the EPS with the power cord plugged in. There are hazardous voltages present in the power supply section.

MusicParts.com

Service Bulletin #4

May 15, 1989

INSTALLATION INSTRUCTIONS

1) Both resistors and capacitors are located at the upper right corner of the main board near the 9-pin Output Expander connector. It is easily visible and **accessible without removing the keyboard**. With the EPS facing you, remove the four control panel screws with the hex wrench. Open the lid and locate the TL084 chip at location U61 as designated directly above the IC on the circuit board silk-screen. This is the 14-pin IC closest to the right side of the board. Figure 1 is a magnified view with each of the components to be replaced clearly labelled.

WARNING: Be sure to keep the soldering iron on an angle away from the plastic case to avoid burning the plastic case.

2) Carefully remove C121 and C136 by heating each lead individually from the top side of the board and pulling the lead gently from the board with small needlenose pliers. Then remove R122 and R134. The end of each lead is crimped slightly on the bottom side of the board, so you must gently rock each lead back and forth while pulling. Although the lead holes are plated-through and relatively difficult to damage, be careful not to pull up any traces.

3) After removing the components, clear any remaining solder from each of the lead holes using solder removal braid. You may need to add a small amount of solder to each hole so the braid will have contact with and absorb any remaining solder.

Location	Remove	Install
C121	150pF capacitor (marked 151)	100pF capacitor (marked 101)
C136	150pF capacitor (marked 151)	100pF capacitor (marked 101)
R122	11KΩ, 5% (brown-brown-orange-gold)	22KΩ, 5% (red-red-orange-gold)
R134	11KΩ, 5% (brown-brown-orange-gold)	22KΩ, 5% (red-red-orange-gold)

4) You may need to trim the leads of the new components to prevent the long leads from shorting out underneath the main board. Insert the new resistors into the appropriate lead holes. Then insert the new capacitors.

5) Carefully solder each lead of the new components on the top side of the board.

WARNING:Use solder sparingly as the solder can run down through the lead hole and expand on the bottom side of the board, possibly creating a short circuit which could damage the circuitry.

When you are finished, close the lid and attach the power cord. Boot up the EPS and load in a sound. The EPS should play normally, however the output should be noticeably louder than before at the same volume setting. If this is not the case, disconnect the power cord, open the lid and check your work. If a solder short occurred on the bottom side of the board, it will be necessary to remove the keyboard in order to remove the main board and repair the short (see the EPS Service Manual for disassembly instructions). If everything is working properly, install the four control panel screws using the hex wrench.

Note: The increased output level could lead to overload distortion in the unlikely event that all voices are assigned to the same stereo position and playing at full level. If this occurs, simply reduce the output volume, using the front panel Volume slider, until the distortion stops.

MusicPartsCom

Service Bulletin #4

May 15, 1989

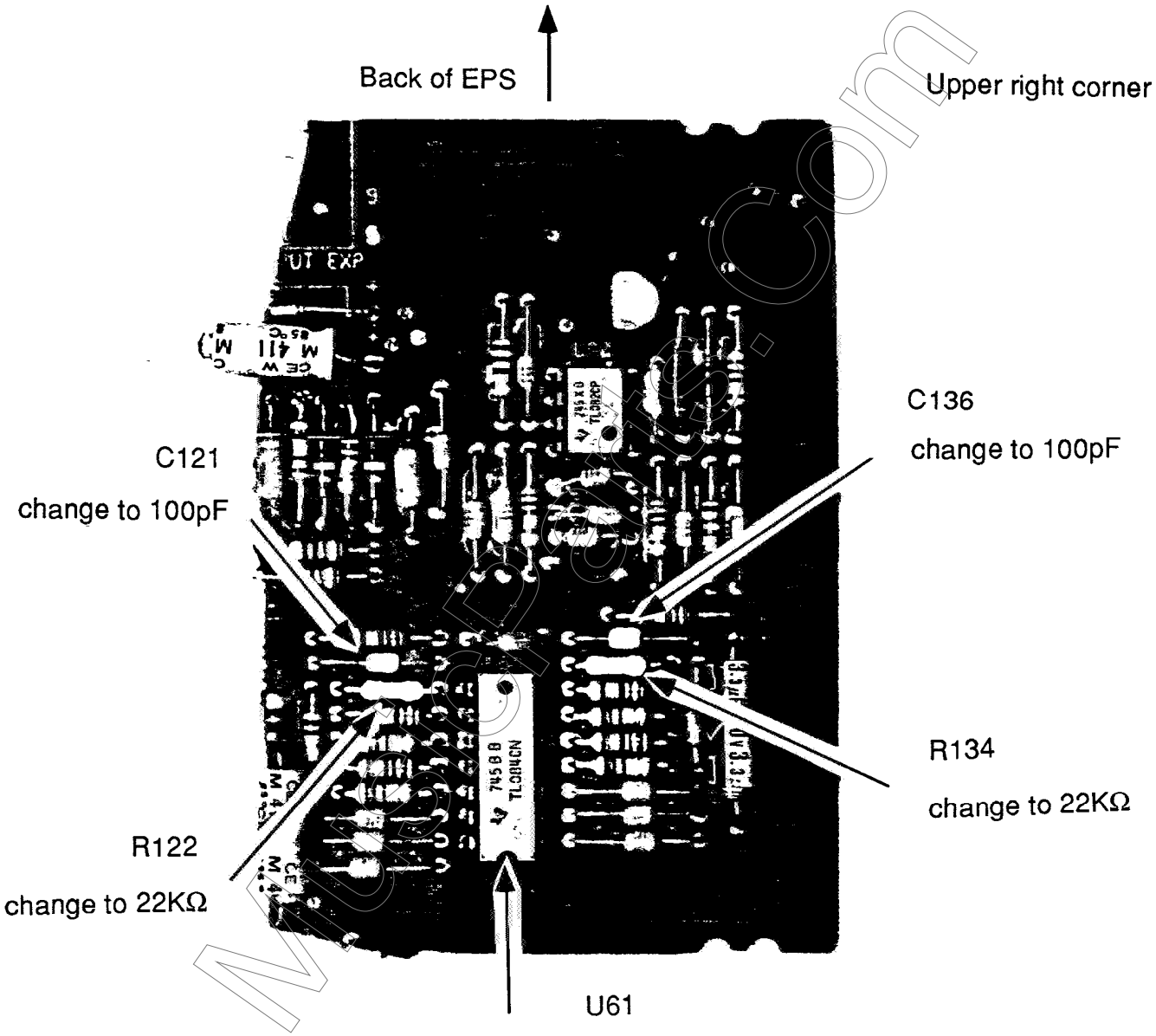

FIGURE 1

EPS 4090007501 Main Board

MacPartis.com

SCSI INSTALLATION INSTRUCTIONS

INCLUDED IN THIS KIT

- One SCSI PC Board (4090008901)
- One 25-pin ribbon cable with D-type connector
- One Plastic Mounting Standoff
- One 34-pin ribbon cable
- Four M3 x 24mm screws
- One set of New bootup EPROMs (Version 2 or higher)
- One New **EPS** O.S. Disk (Version 2 or higher) *** FOR CUSTOMER ***
- One SCSI User's Manual *** FOR CUSTOMER ***
- One Approved Drives Sheet *** FOR CUSTOMER ***
- One Stamped Addressed Bubble Envelope *** FOR RETURNING EPROMS ***

These instructions are the same for adapting a ME-1A or a ME-2.

A. GETTING READY

1. Remove all cables connected to the **EPS** including the Power cable.
2. Remove the four screws that fasten the control panel and raise the panel.
3. Remove the two screws that fasten the cartridge cover to the rear panel of the **EPS**. Discard the cartridge cover.
4. If a memory expander is installed, remove it.
5. Remove the two screws that fasten the metal cartridge retainer to the base and discard the screws and the retainer. If there is a cable-tie attached to the retainer, cut it.
6. Install new **EPS** Bootup EPROMs with the notch toward the keyboard. The EPROMs are labelled "LOWER" (U26) and "UPPER" (U27) indicating the appropriate socket on the **EPS** Main Board.
7. Place the old EPROMs into the black foam and small zip-lock bag. Use the stamped addressed bubble envelope provided to return the old EPROMs to ENSONIQ.

B. ADAPTING THE MEMORY EXPANDER TO ADD SCSI (**SEE FIGURE 1**)

1. Remove the four screws from the top housing of the Memory Expander module, and the two screws from the bottom housing. Remove the top cover.
2. Break away the rear portion of the top housing at the notched area. To aid in breaking away this portion, score the break with a razor knife. Discard the large portion of the top housing.
3. Remove the D-type connector plastic filler from the bottom housing to expose the D-type connector opening. Discard the plastic filler.

MusicParts.com

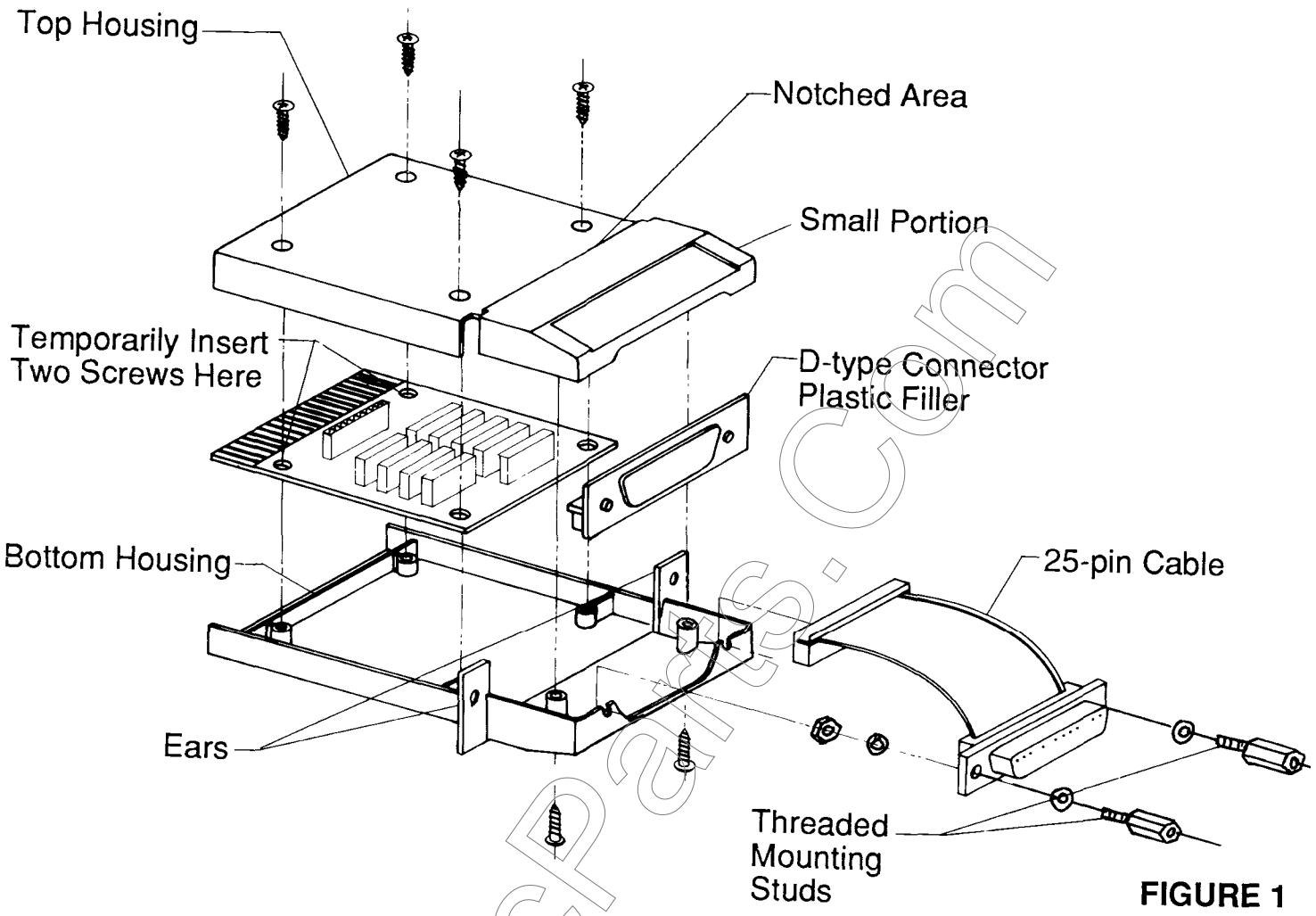

FIGURE 1

C. INSTALLING MEMORY EXPANDER PC BOARD (**SEE FIGURE 1**)

1. Loosen the two threaded mounting studs on the D-type connector.
2. With the card edge connector side of the module towards you, place the D-type connector into the opening in the bottom housing, keeping the striped edge of the 25-pin ribbon cable on the left.
3. Secure the D-type connector to the bottom housing by tightening the two threaded mounting studs on the connector until they are snug.
4. Secure the remaining small portion of the top housing to the bottom housing from the underside using two of the original Memory Expander screws. This will trap the D-type connector into the module assembly. Now, fully tighten the two threaded mounting studs on the D-type connector.
5. Temporarily use two of the original Memory Expander screws to fasten the front of the Memory Expander PC board to the bottom housing to hold it in place (it is only necessary to insert the screws one or two turns).
6. Slide the Memory Expander module carefully into the **EPS** case thru the cartridge opening and slide the 25-pin ribbon cable into the **EPS** case. Loosely attach the Memory Expander module to the back of the **EPS** with the original Memory Expander screws. Insert the screws through the ears of the module and into the holes in the cartridge cover opening.

MusicParts.Com

IMPORTANT!

*Some early **EPS** cases have a recessed System Expander Port. The module ears were not designed to fit into the recessed area. If the unit has a recessed System Expander Port, there will be a gap between the module ears and the case. This is normal. Do not try to force the module ears into this recess.*

7. Make sure the Memory Expander PC board is fully seated in the connector on the **EPS** Main Board.
8. Remove the two temporary screws (from step 5) that are holding the Memory Expander PC board to the bottom housing.

D. ATTACHING THE SCSI PC BOARD (**SEE FIGURE 2**)

1. Place the plastic mounting standoff onto the Memory Expander PC board.
2. Carefully connect the SCSI PC board (4090008901) to the Memory Expander PC board via the board-to-board 10-pin/socket connector. Rest the SCSI PC board on the plastic mounting standoff.

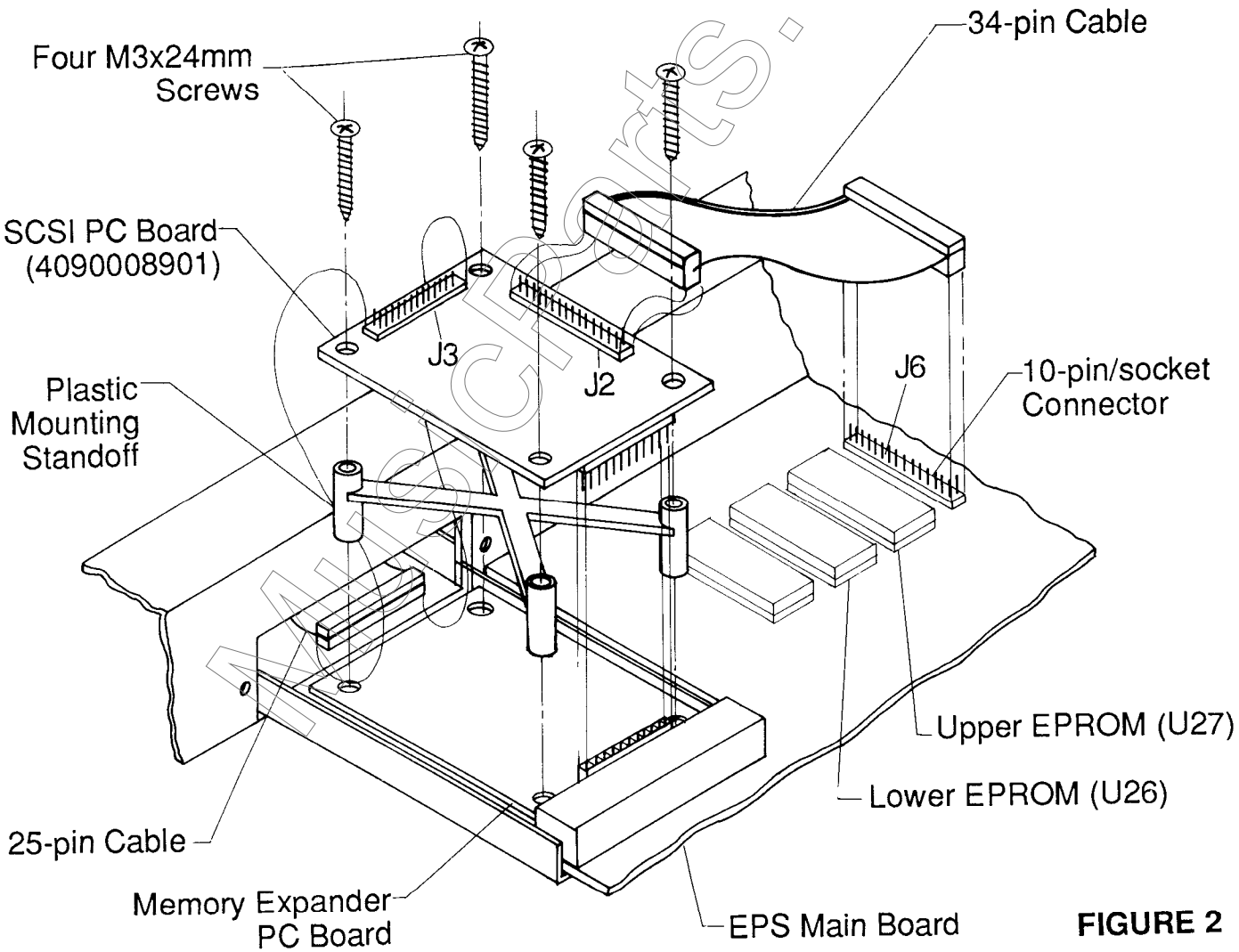

FIGURE 2

AllCPorts.com

3. Use the four M3 x 24mm screws to attach the SCSI PC board through the plastic mounting standoff and the Memory Expander PC board to the bottom housing.
4. Connect the 25-pin ribbon cable from the D-type connector to J3 on the SCSI PC board.
5. Connect the 34-pin ribbon cable from J6 (Auxiliary Expansion) on the **EPS** Main Board to J2 on the SCSI PC board, with the red stripe towards the back of the unit.
6. Tighten the two screws that hold the ears of the module to the cartridge cover opening.

E. TESTING

1. Turn on the **EPS** with no disk in the disk drive. If the **EPS** sees the SCSI card, the display will show "SCSI INSTALLED," and then, "ENSONIQ EPS," "PLEASE INSERT DISK."
   NOTE: *The **EPS** will show the SCSI message only once after power up.*
2. If the SCSI message does not appear, then there is a problem with the connections:
   a. Make sure that all the pins of the 10-pin/socket connector are making contact.
   b. Make sure the EPROMs are oriented correctly.
   c. Make sure the 34-pin ribbon cable is connected properly.
3. Insert the O.S. Disk provided. After the O.S. has loaded, but before you load any instruments or sequences, check the available memory. Press *Edit*, then double-click on the *System* button to see the amount of free memory. The amount of internal memory ("FREE SYSTEM BLOCKS = ") should now be greater than 2,000 (for a 2X expander) or 4,000 (for a 4X expander).
4. Close the control panel and replace the screws.

BE SURE TO GIVE THE CUSTOMER THE MANUAL, THE APPROVED DRIVES SHEET, AND THE O.S. DISK.

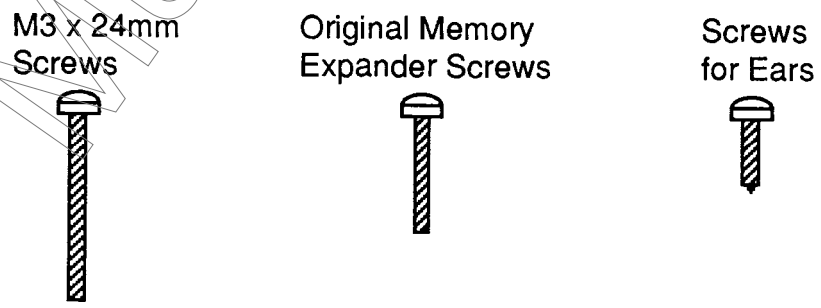

MusicPartsCom