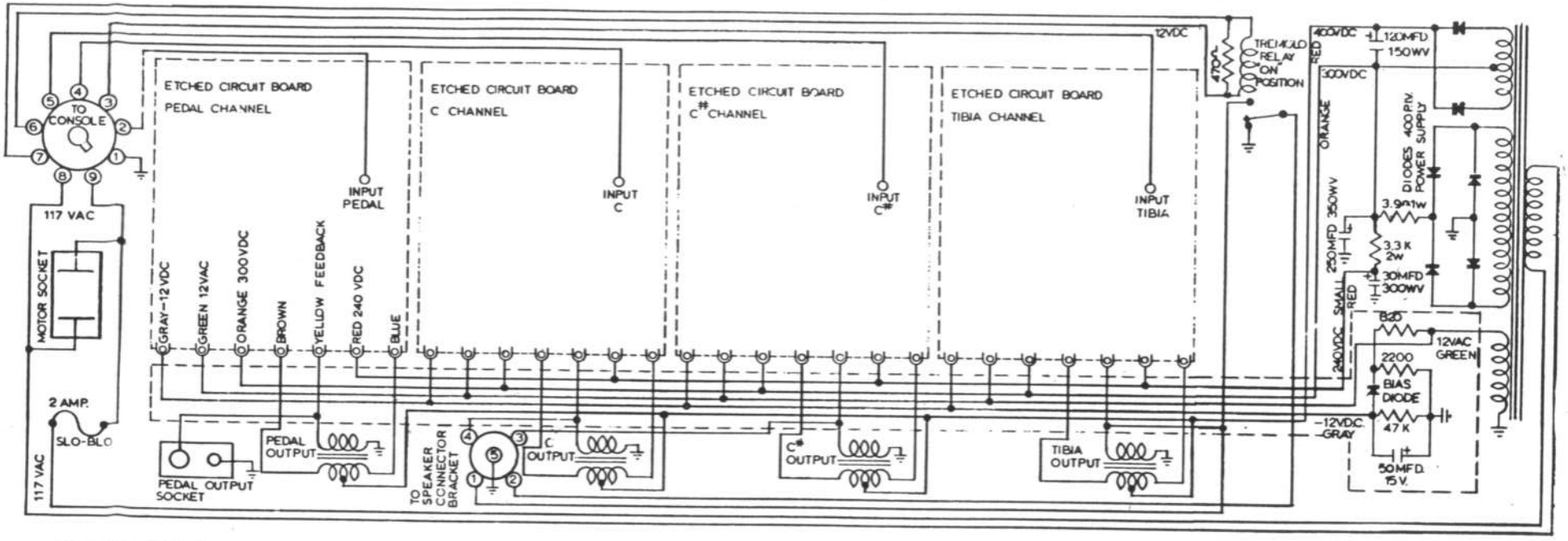

LESLIE TYPE 100GK FOUR-CHANNEL POWER AMPLIFIER

Above: General amplifier schematic showing:

1. Location of etched circuit boards for the four amplifier channels.
2. Location of bias and terminal strip board adjacent to circuit boards.
3. Connections between circuit boards, terminal board, and other major amplifier components.
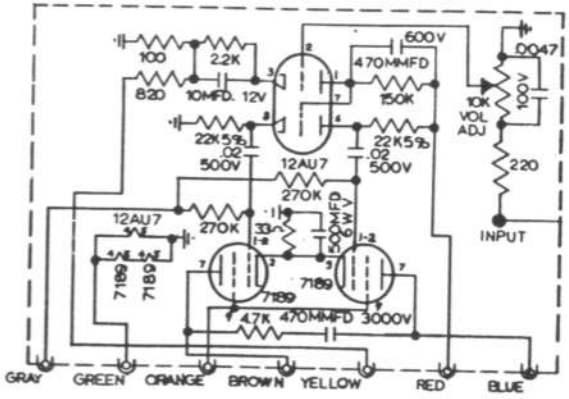
Right: Detail of one of the four identical etched circuit boards, part No. 100-13.