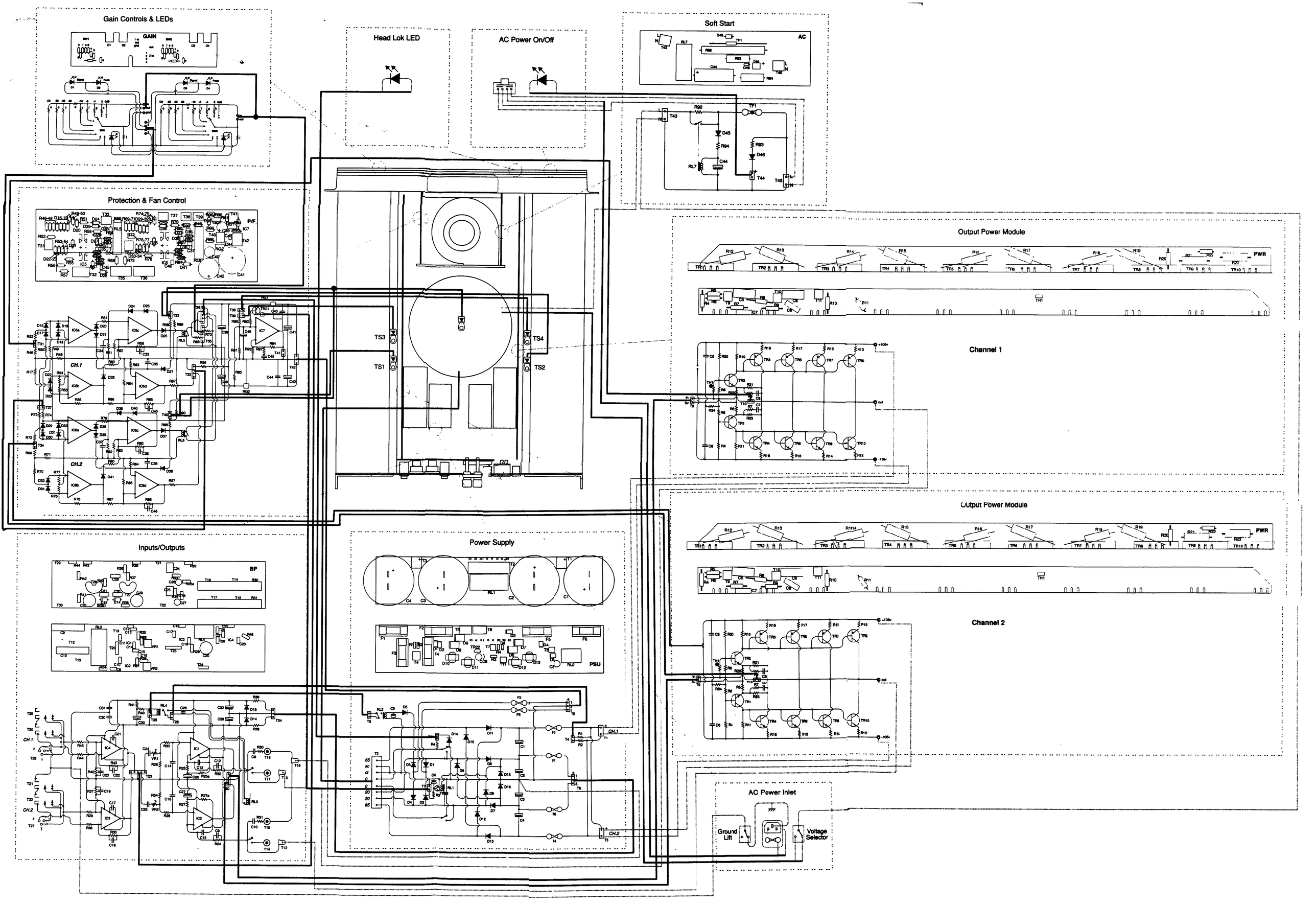
Gain Controls & LEDs
GAIN
Head Lok LED
AC Power On/Off
Soft Start
AC
Protection & Fan Control
P/F
Output Power Module
PWR
Channel 1
Output Power Module
PWR
Channel 2
TS3
TS1
TS4
TS2
CH.1
CH.2
Inputs/Outputs
BP
Power Supply
PSU
AC Power Inlet
Ground Lift
Voltage Selector

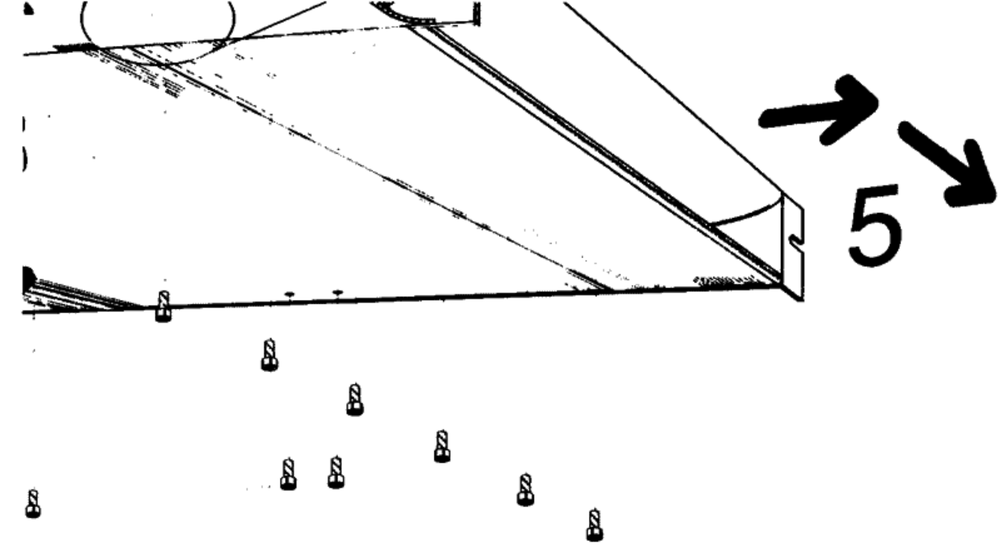

Chameleon

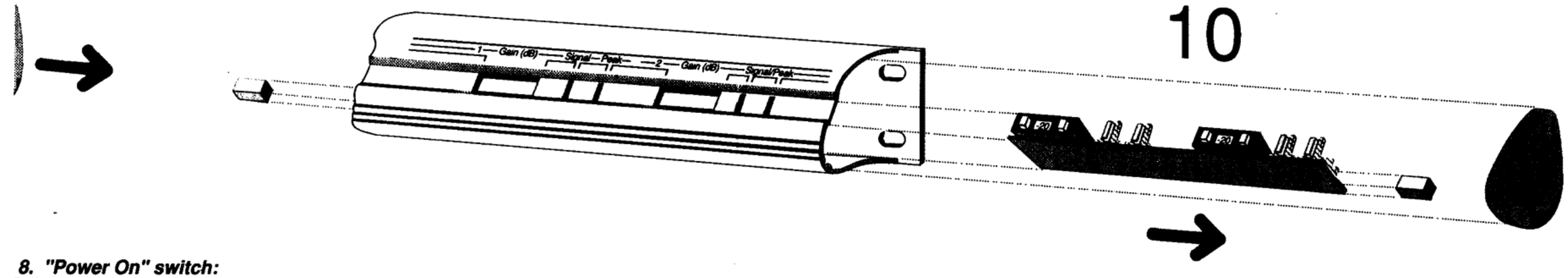

8. "Power On" switch:
Follow steps 1 through 6, removing the left side power dule and the "Power On" LED.
nserting a small pointed implement through the end of the it profile, carefully prise the actuator button out through its ning as shown in 7.
Slide the switch plate out of the end of the profile far enough eplace the defective switch, as shown in 8.

"Head-Lok" LED:
Unplug the wiring connecting the LED to the Fan/Protection B.
Slide the front profile's left inside protection-plug across the d hold opening, breaking the locking adhesive.
Free the LED holder from its retaining block as described in

Slide the LED holder backwards to free the LED from its ating hole, and remove it from the profile via the hand hold.

10. Gain Control and "Signal"/"Peak" LED module:
a. Unplug the cabling connecting the module to the Fan/Protection PCB.
b. Follow step 6a to remove the end-plug .
c. Remove the right hand "stop-block", located behind the Gain Control and LED module, prising it upwards slightly with a small pointed implement to break the locking adhesive.
c. Using a long, thin implement inserted through the right end of the profile, drive out the left hand "stop-block", tapping it lightly to break the locking adhesive.
e. Slide the module backwards to free it from its locating holes, and remove it from the end of the profile.

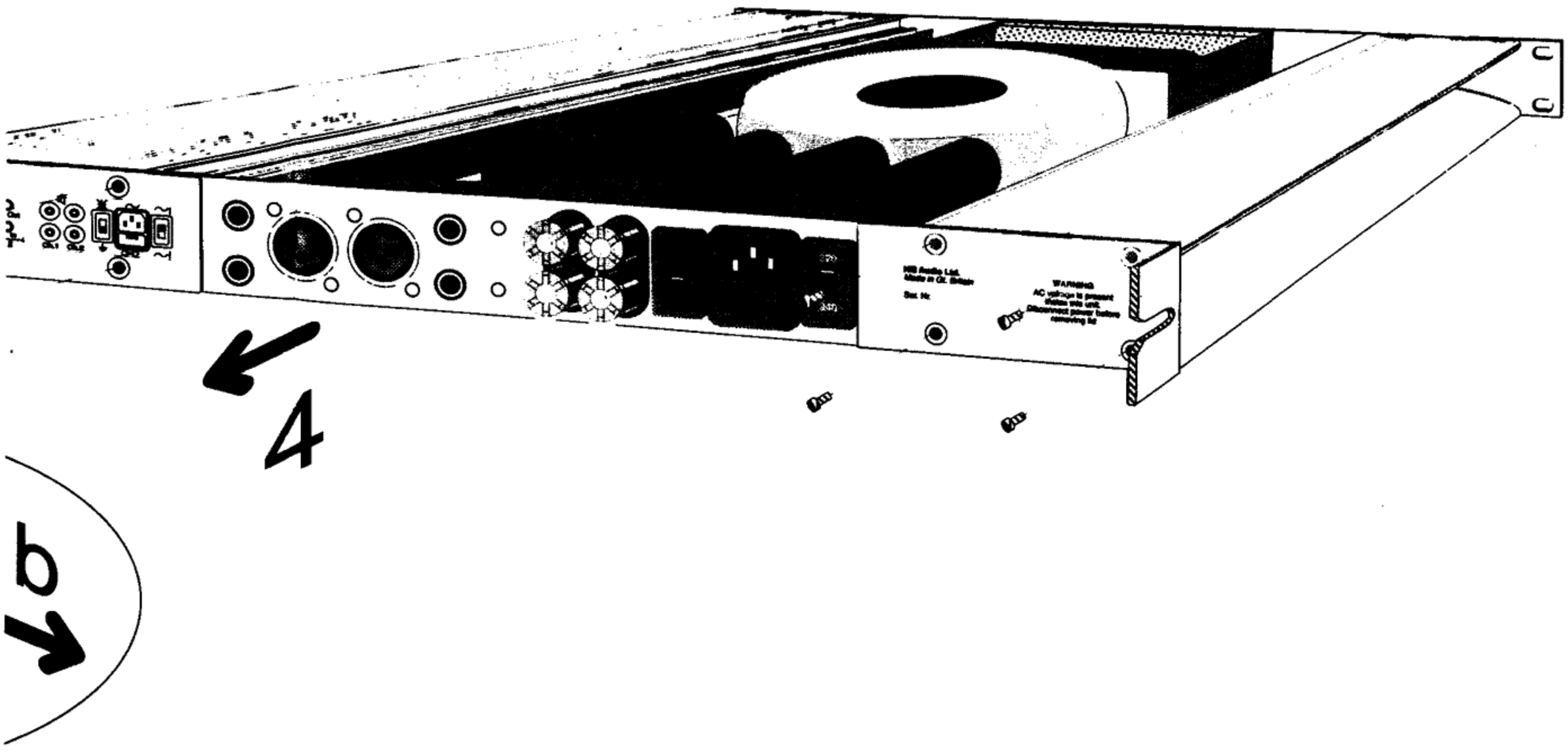

DISASSEMBLING

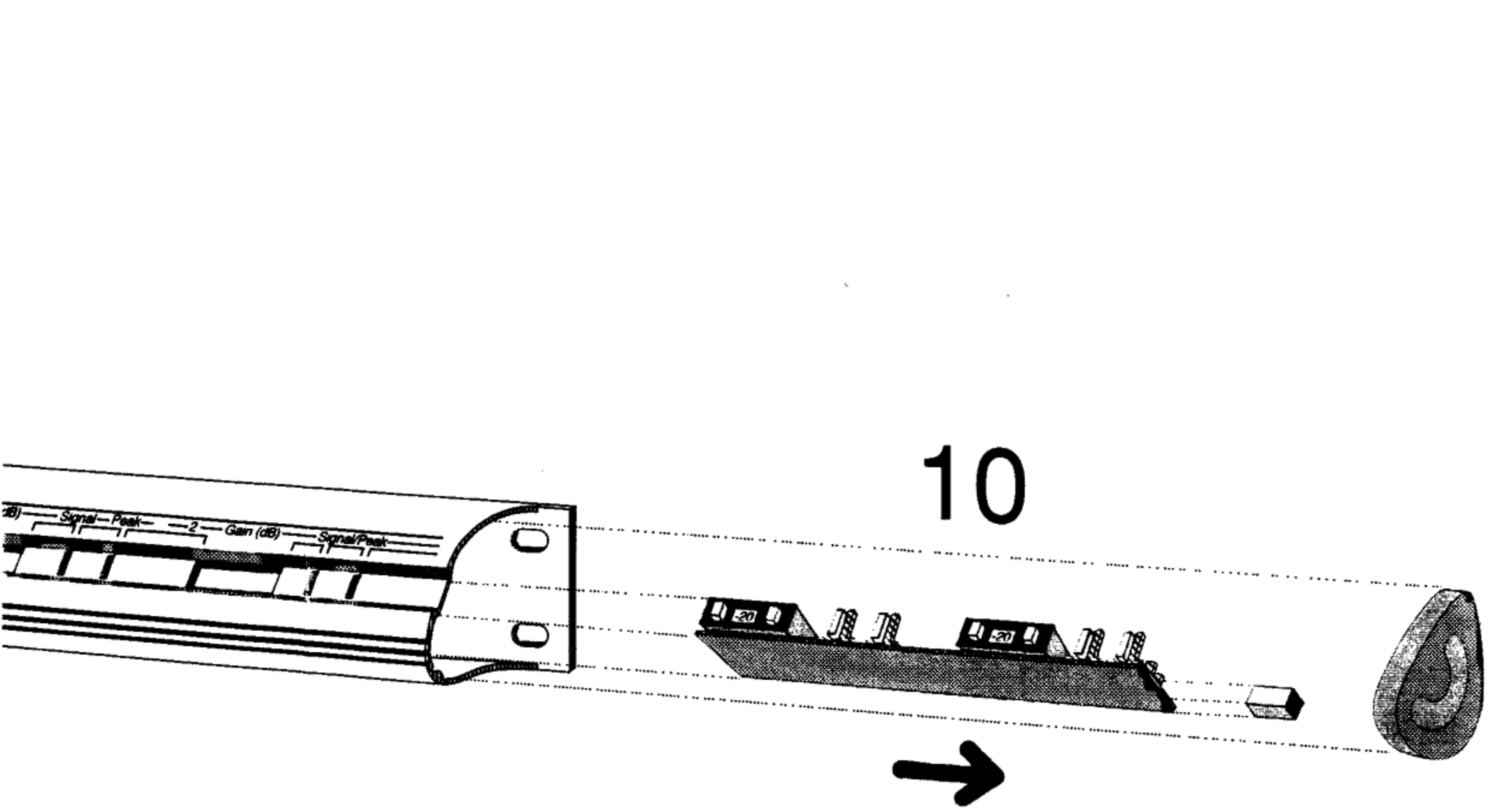

10. Gain Control and "Signal"/"Peak" LED module:

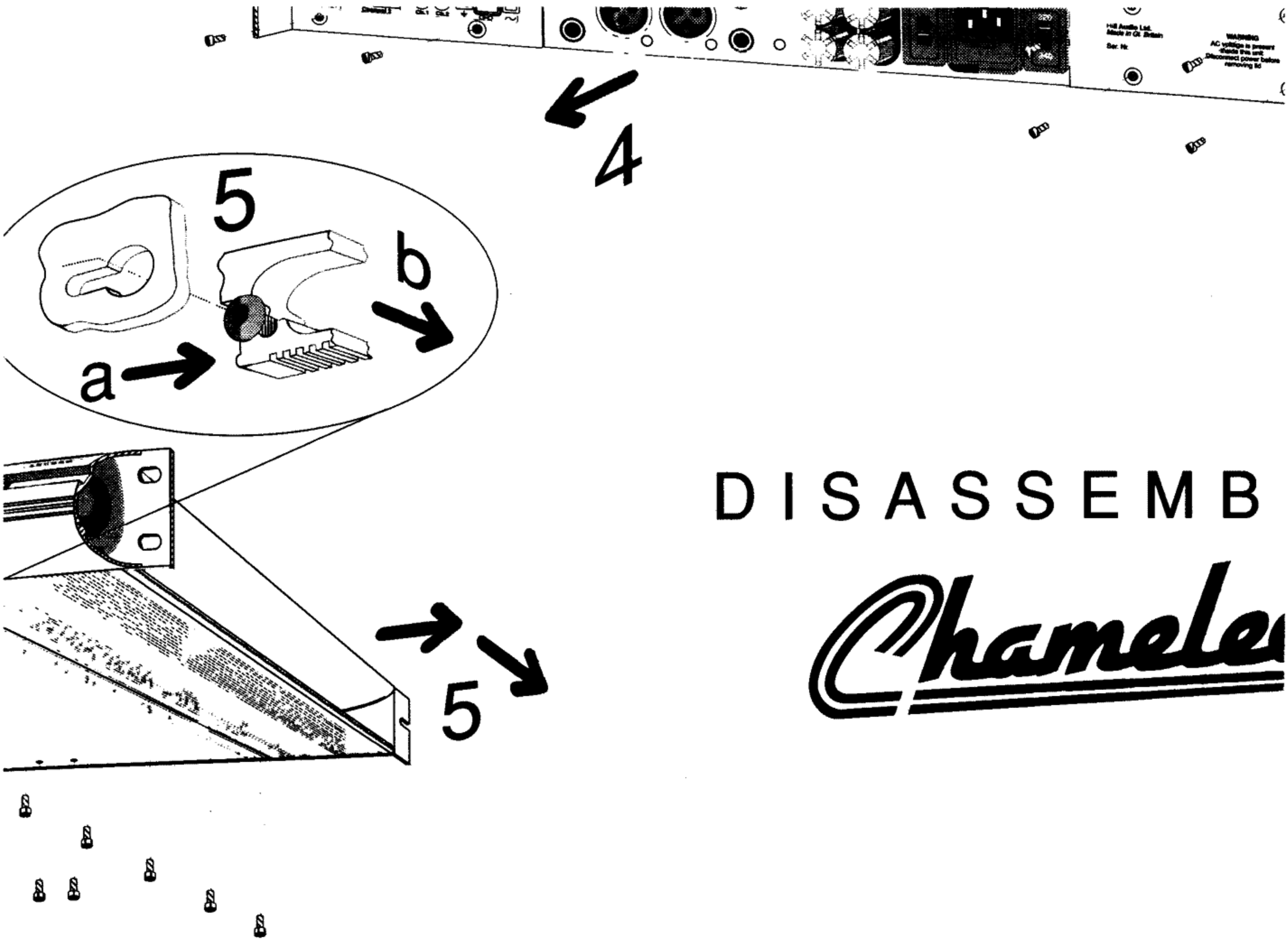

DISASSEMB

Chamele

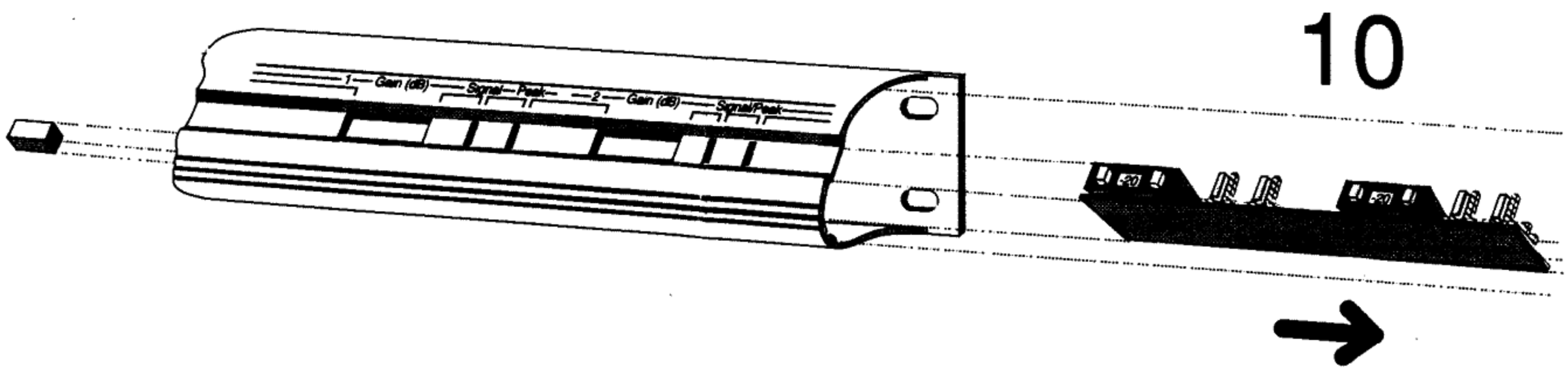

switch:

ough 6, removing the left side power
er On" LED.
ointed implement through the end of the
prise the actuator button out through its
7.
ate out of the end of the profile far enough
ve switch, as shown in 8.

:
connecting the LED to the Fan/Protection

file's left inside protection-plug across the
reaking the locking adhesive.
ler from its retaining block as described in

der backwards to free the LED from its
nove it from the profile via the hand hold.

10. Gain Control and "Signal"/"Peak" LED module:

a. Unplug the cabling connecting the module to the Fan/Protection PCB.
b. Follow step 6a to remove the end-plug .
c. Remove the right hand "stop-block", located behind the Gain Control and LED module, prising it upwards slightly with a small pointed implement to break the locking adhesive.
c. Using a long, thin implement inserted through the right end of the profile, drive out the left hand "stop-block", tapping it lightly to break the locking adhesive.
e. Slide the module backwards to free it from its locating holes, and remove it from the end of the profile.

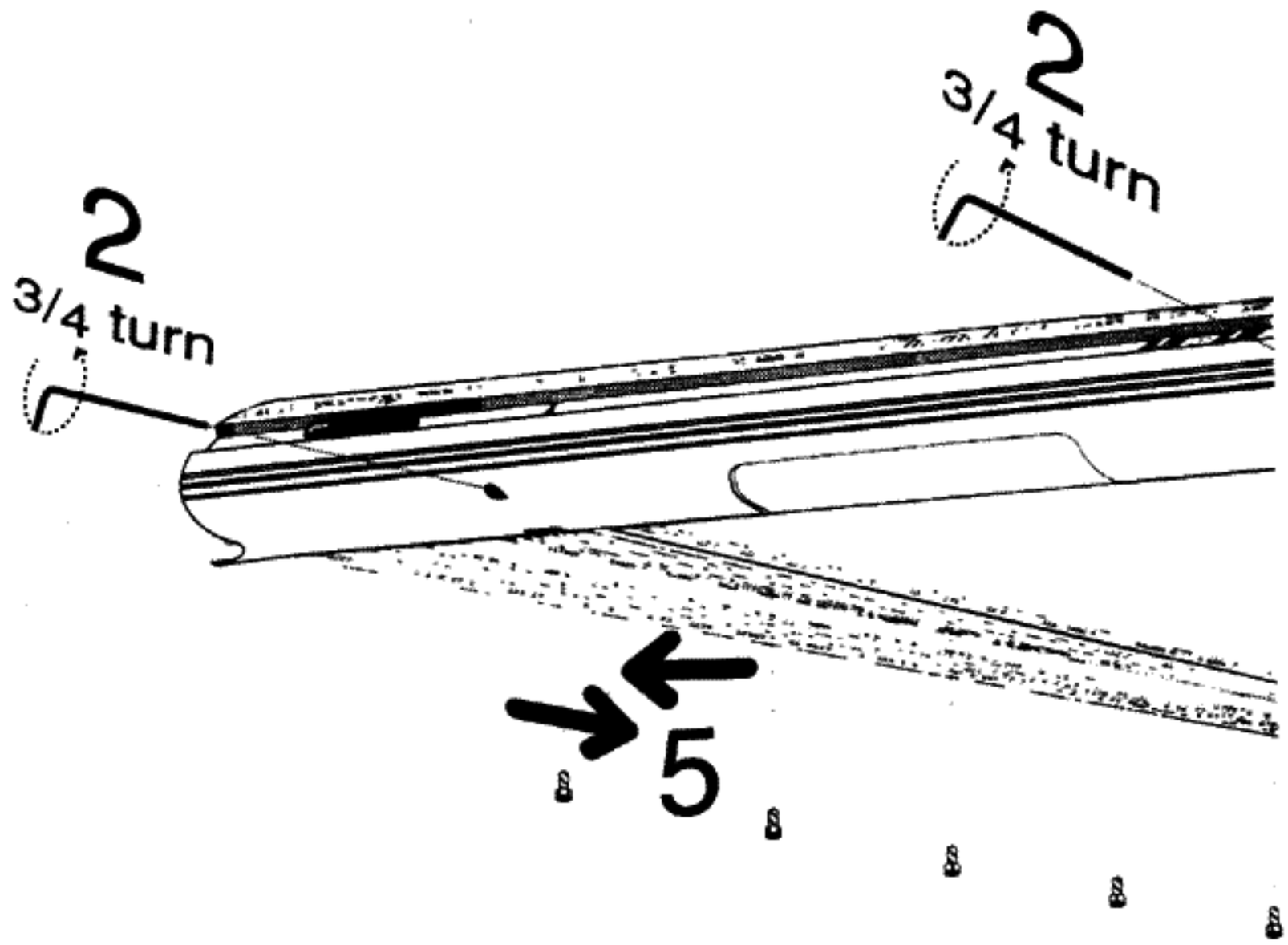

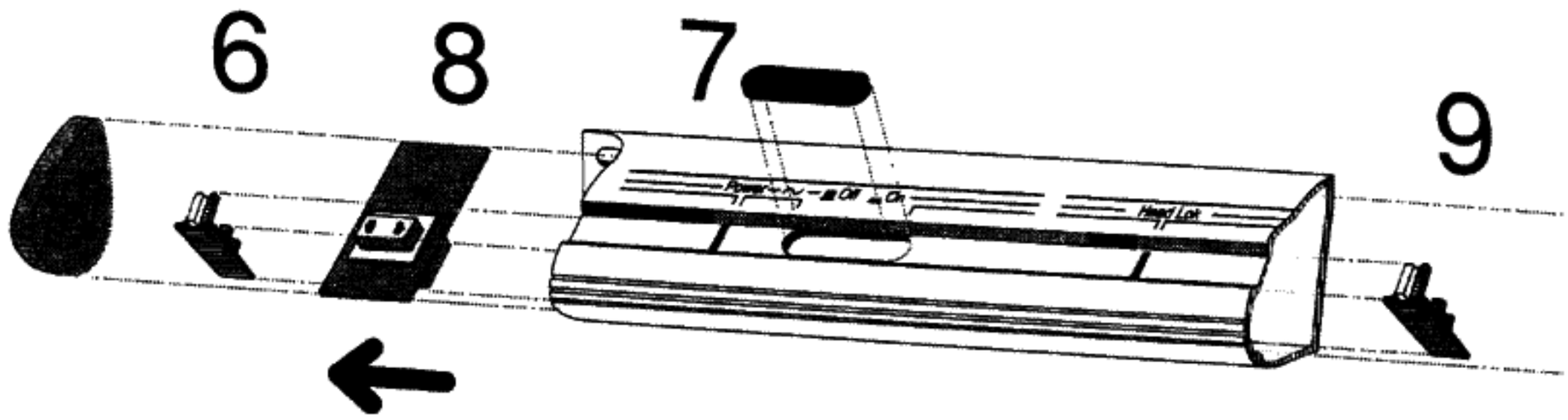

1. Removing Top Panel:
Unscrew the 8 hex-socket-head screws located in the top panel channels, and lift top panel vertically.

2 & 3. Removing Baseplate:
a. Follow step 1 to remove top panel.
b. Unplug all cabling connected to the baseplate.
c. Insert a 3mm hex-key through the holes located near the bottom of the front profile and loosen the 2 screws (which lock the front profile to the bottom panel) just 3/4 of a turn, as shown in 2.
d. Unscrew the 12 hex-head screws located in the baseplate channels, and the two countersunk screws located at the centre back of the baseplate.
e. Drop panel vertically as shown in 3.

Note: When replacing the Baseplate be sure to replace all the screws firmly, but without overtightening.

4 & 5. Removing a Power Module:
a. Follow steps 1, 2 and 3.
b. Unplug all cabling connected to the rear panel and relevant power module.
c. Remove the rear panel by unscrewing the 8 hex-socket-head screws as shown in 4.
d. Gently tap the power module outwards about 8mm (5/16"), until the screw heads are free in the "keyhole" openings, then slide it backwards, as shown in 5a & b.

Removing Front Profile Components:

6. "Power On" LED:
a. Remove the profile end-plug, breaking the locking adhesive, and slide it outwards.
b. Using a small, pointed implement, prise the bottom of the LED holder upwards to free it from its retaining block.
c. Slide the LED holder backwards to free the LED from its locating hole, and remove the unit from the end of the profile far enough to replace the defective LED.

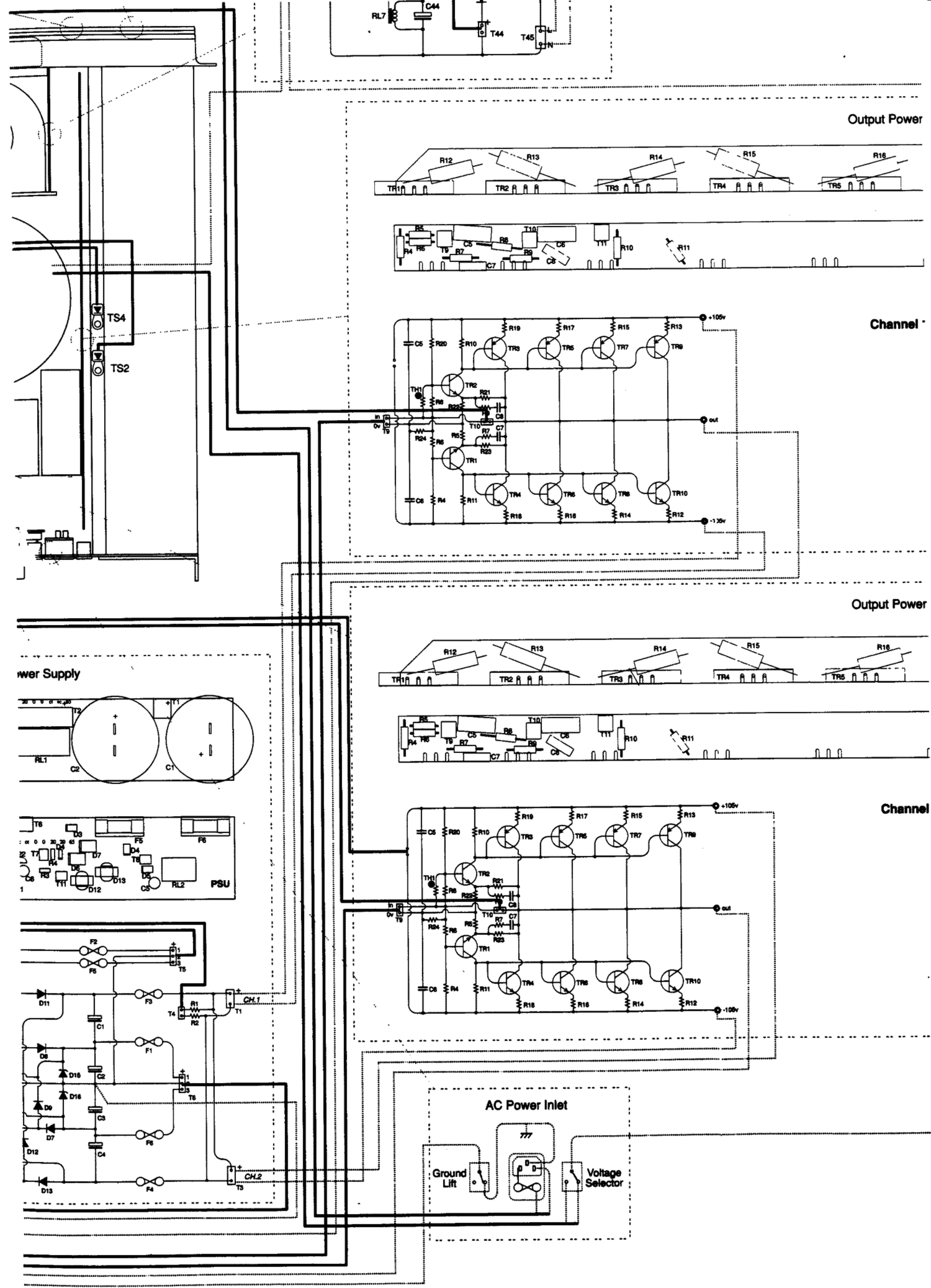
Output Power
Channel
Output Power
Channel
wer Supply
PSU
AC Power Inlet
Ground Lift
Voltage Selector
CH.1
CH.2
TS4
TS2
RL7
C44
T44
T45
RL1
C2
C1
RL2
+105v
-105v
in
0v
out

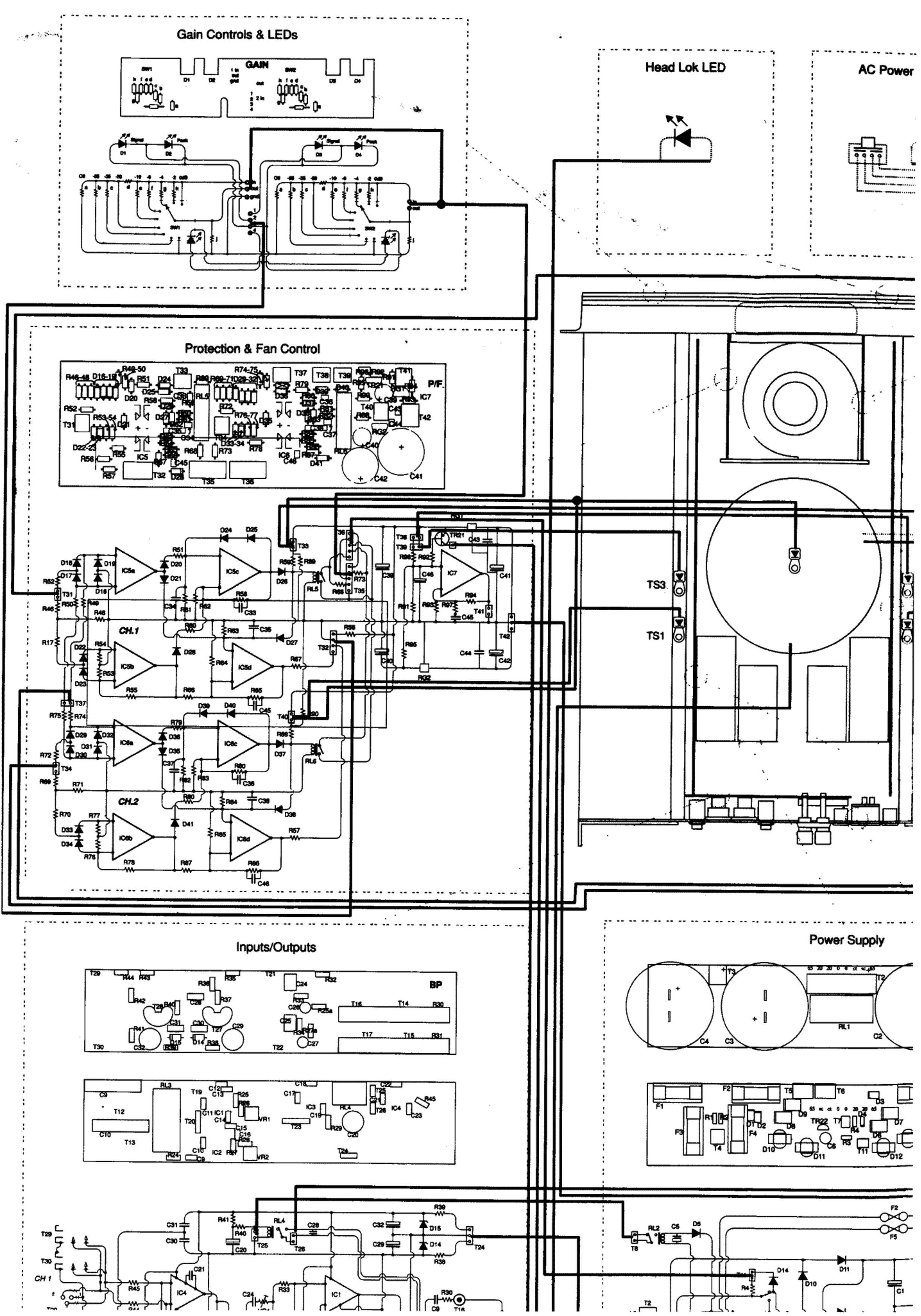
Gain Controls & LEDs
GAIN
Head Lok LED
AC Power
Protection & Fan Control
P/F
TS3
TS1
CH.1
CH.2
Inputs/Outputs
BP
Power Supply
CH 1

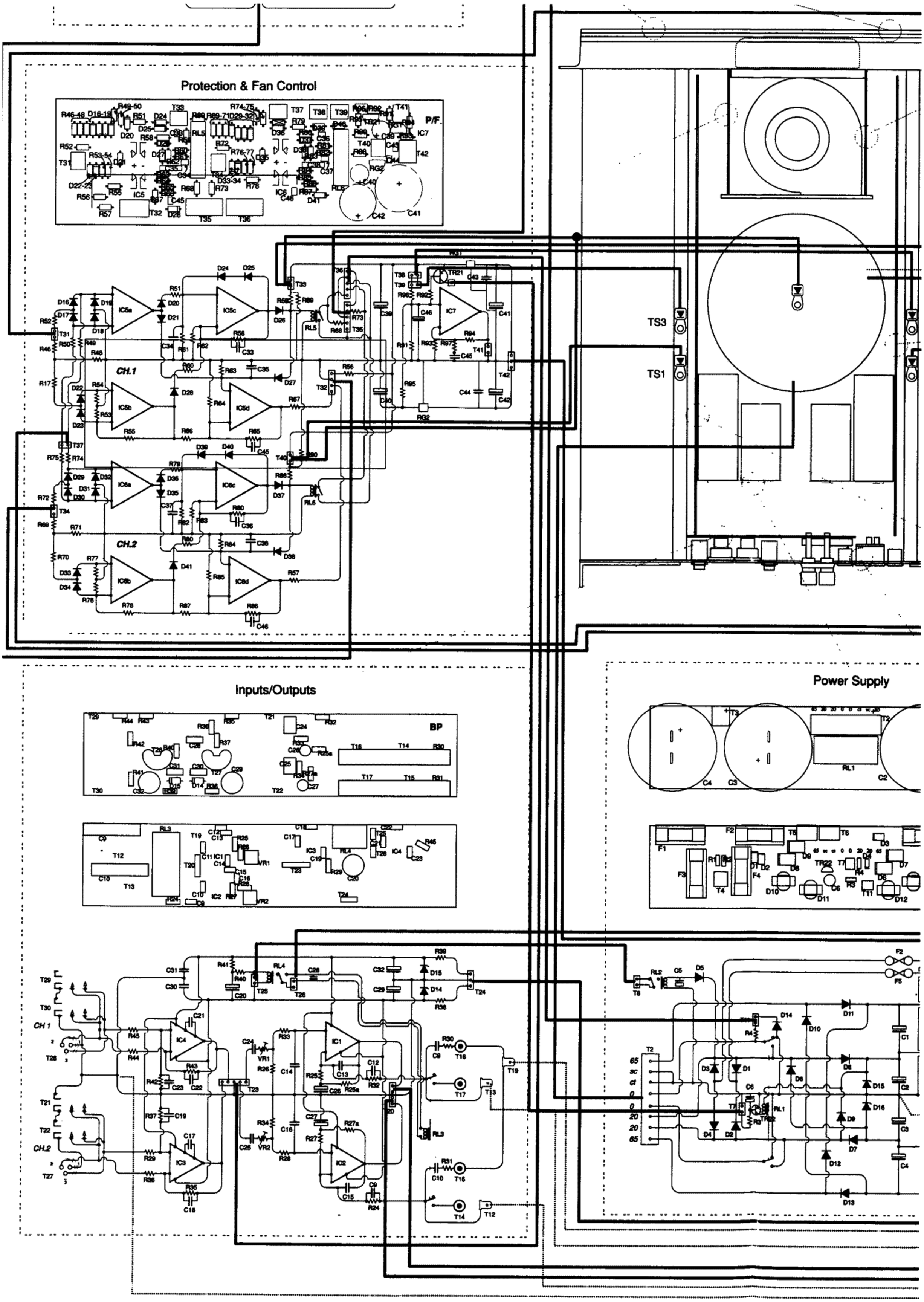
Protection & Fan Control
P/F
CH.1
CH.2
TS3
TS1
Inputs/Outputs
BP
Power Supply
CH 1
CH.2

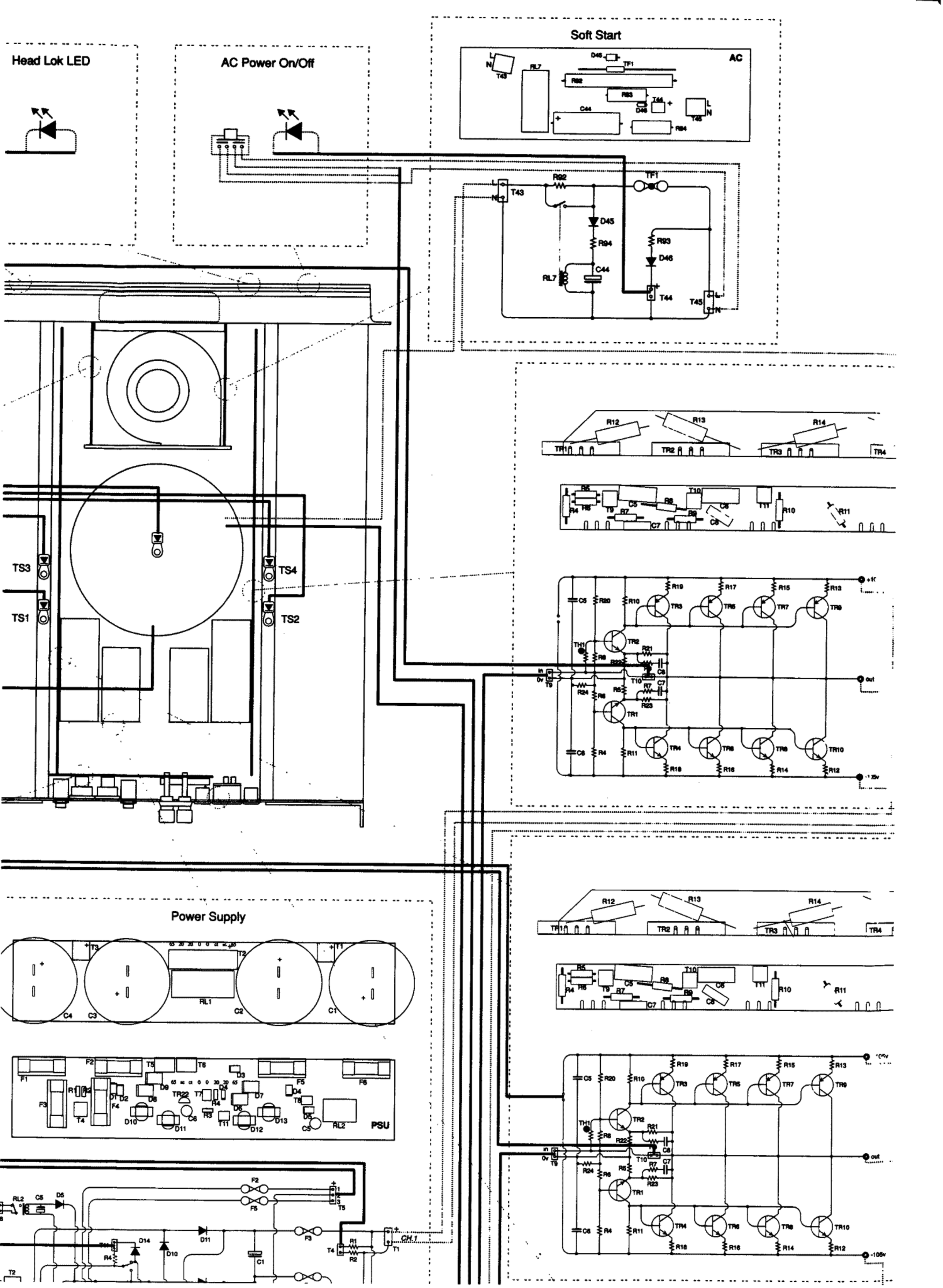
Head Lok LED
AC Power On/Off
Soft Start
AC
TS1
TS2
TS3
TS4
Power Supply
PSU
CH.1

Output Power Module

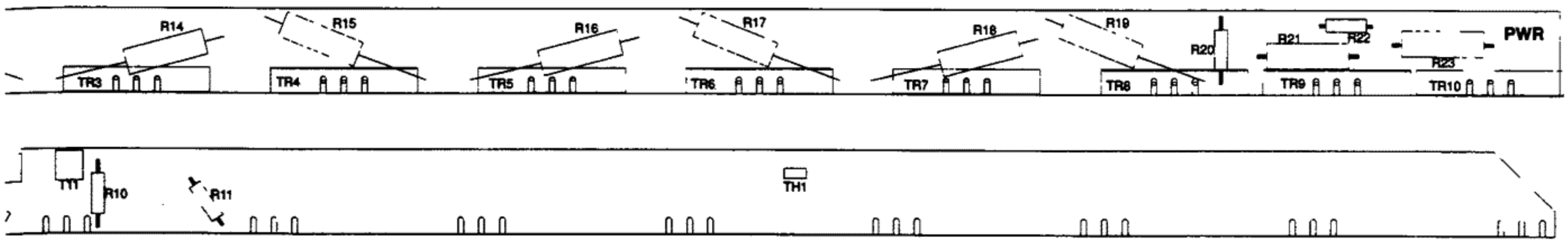

Channel 1

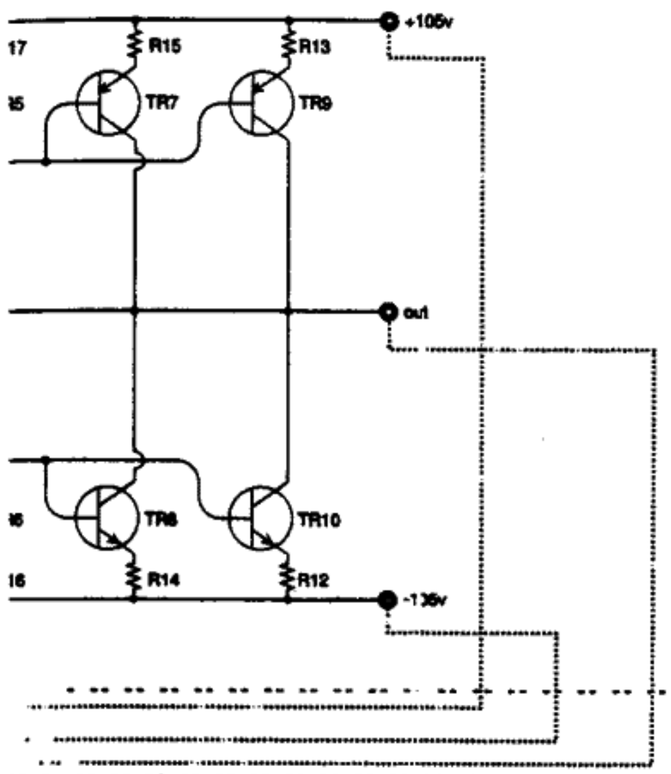

Output Power Module

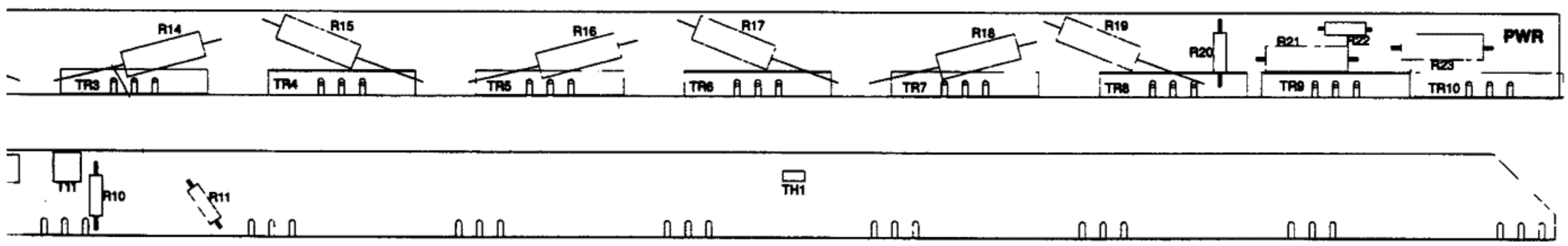

Channel 2

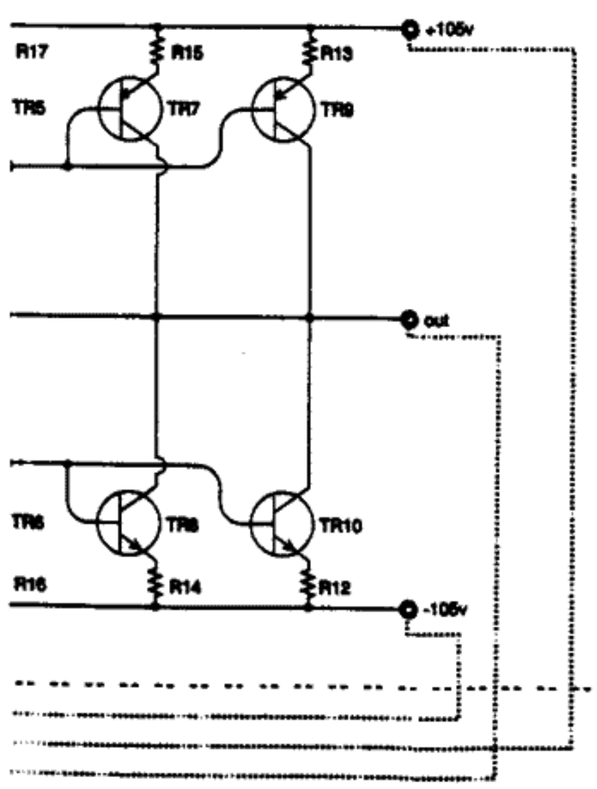

Voltage Selector