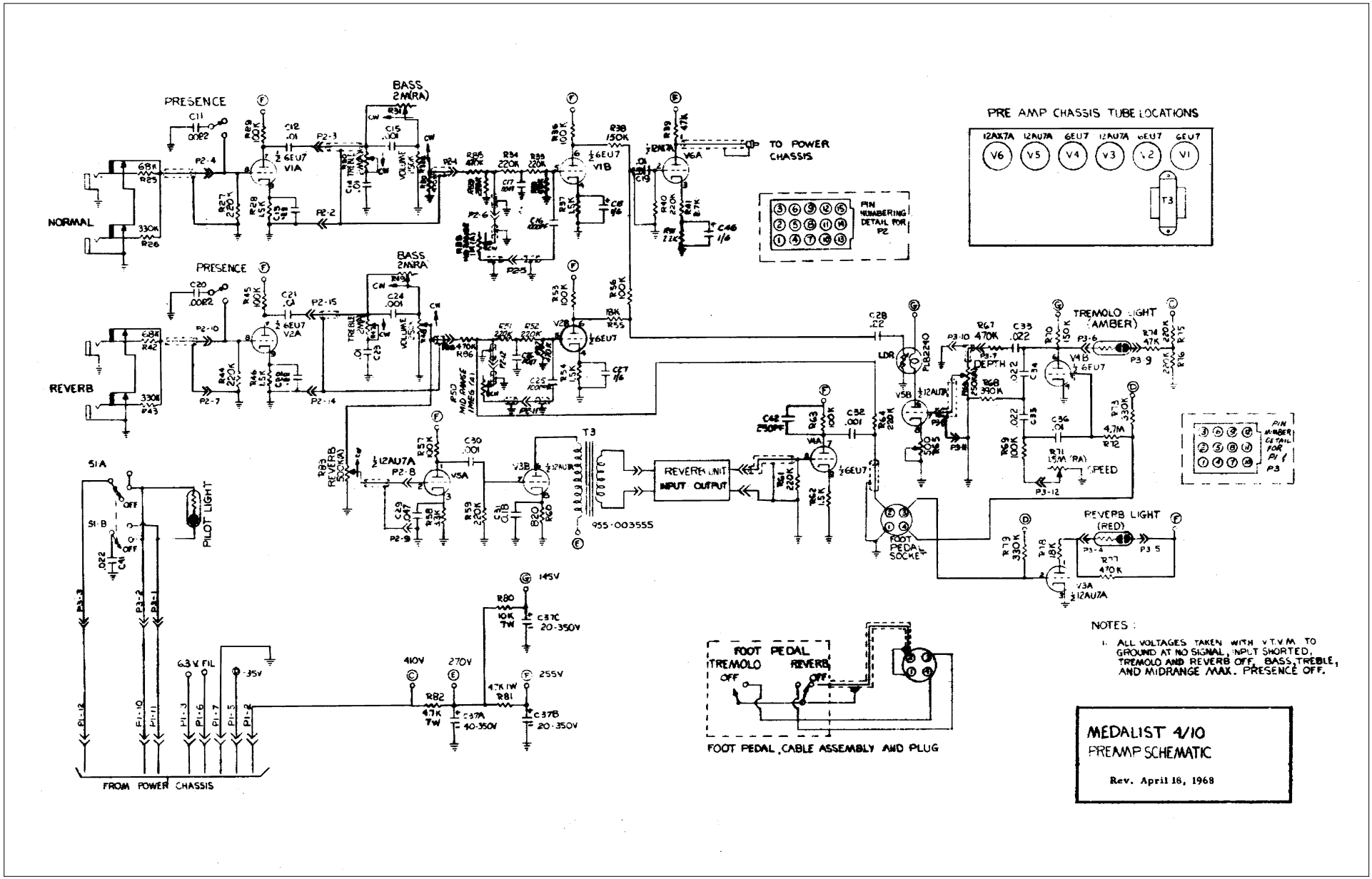
PRESENCE
BASS 2MRA
NORMAL
REVERB
TO POWER CHASSIS
PRE AMP CHASSIS TUBE LOCATIONS
12AX7A 12AU7A 6EU7 12AU7A 6EU7 6EU7
V6 V5 V4 V3 V2 V1
T3
PIN NUMBERING DETAIL FOR P2
TREMOLO LIGHT (AMBER)
DEPTH
SPEED
REVERB LIGHT (RED)
REVERB UNIT
INPUT OUTPUT
FOOT PEDAL SOCKET
PIN NUMBER DETAIL FOR P1 & P3
S1A
S1-B
PILOT LIGHT
FROM POWER CHASSIS
63 V FIL
145V
255V
410V
270V
955-003555
FOOT PEDAL
TREMOLO
REVERB
OFF
FOOT PEDAL CABLE ASSEMBLY AND PLUG
NOTES :
1. ALL VOLTAGES TAKEN WITH V.T.V.M. TO GROUND AT NO SIGNAL, INPUT SHORTED, TREMOLO AND REVERB OFF, BASS, TREBLE, AND MIDRANGE MAX. PRESENCE OFF.
MEDALIST 4/10
PREAMP SCHEMATIC
Rev. April 18, 1968