SERVICE MANUAL

Matrix-6

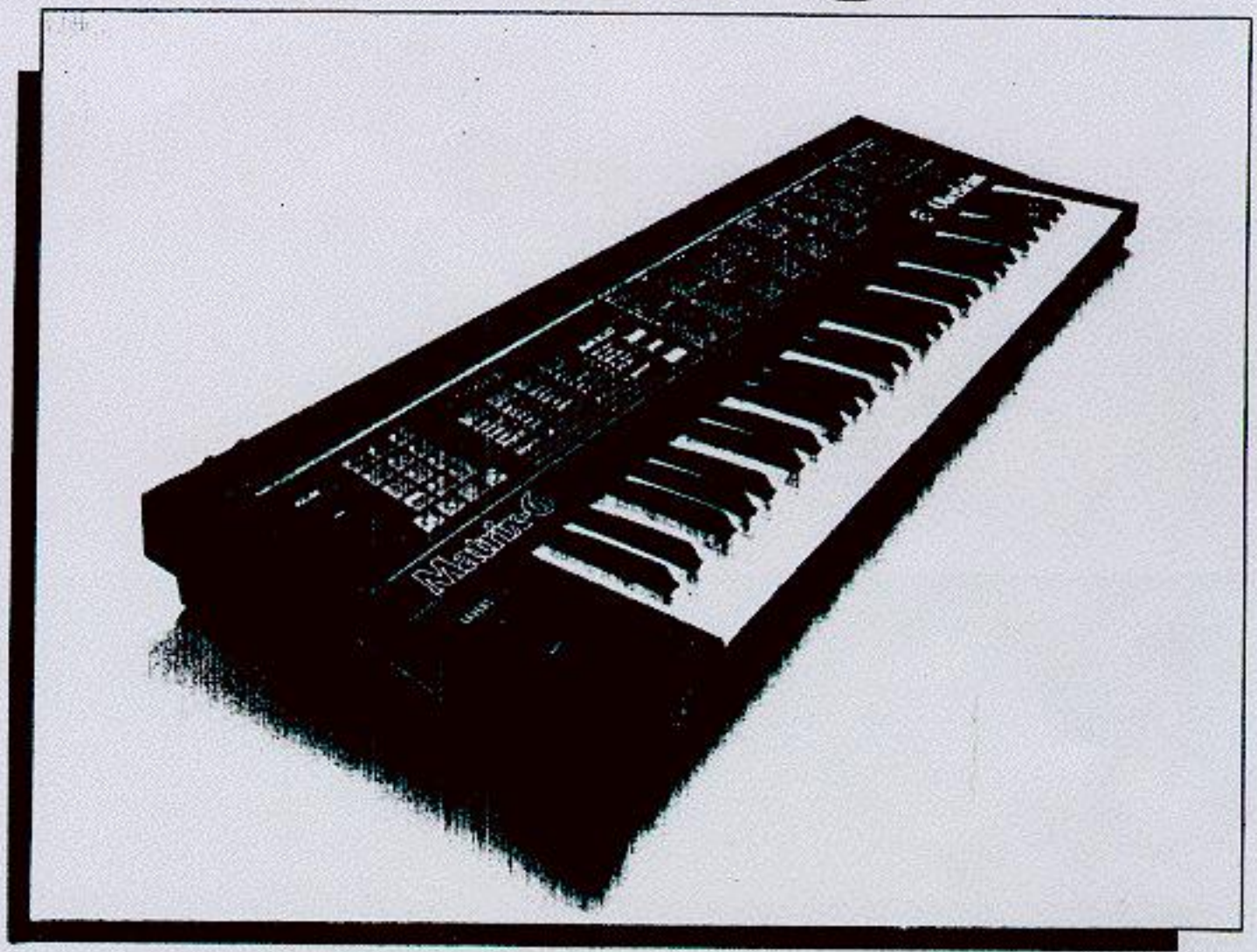

Oberheim

A Division of ECC Development Corporation

MATRIX-6 SERVICE MANUAL

PRELIMINARY EDITION - February, 1986

00 MATRIX-6

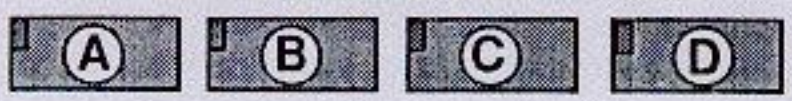

CALIBRATIONS

1. **TUNE** - While in MASTER EDIT, pressing the **B** button puts the MATRIX-6 into AutoTune. The cycle takes approximately two to three seconds to complete, during which time the display reads "***TUNING...***". While in TUNE mode, the processor is tuning the MATRIX-6's three High Frequency Oscillators (HFOs).

2. **CALIBRATE** - While in MASTER EDIT, pressing the **A** button puts the MATRIX-6 into Parameter Select mode. While in this mode, call up parameter 52 and the display should read "***52 CALIBRATE***". Now press the **D** button. This will put the MATRIX-6 into VALUE mode and the display will read "***READY?***". Press the YES button on the Keypad - the display will blank out during the Calibration routine. When the process is finished, the display will return to read "***52 CALIBRATE***".

   The CALIBRATE function calibrates the three HFOs as well as the VCF Frequency, Pulse Widths, Resonance amount and VCA2 level on each voice. If the MATRIX-6 encounters any problems while tuning the voices, it will display which voice and the section of that voice that is having the problem. To display tuning failures enter CALIBRATE mode and, with the display blank, press and hold the **C** button until the display returns to "***52 CALIBRATE***".

If the MATRIX-6 tunes all six voices without encountering any problems, the display will remain blank during the tuning process. When problems are encountered, the display will indicate which of the four sections of the tuning process and the voice or voices that are bad. Failures in any of the four sections of the tuning process are displayed with the following messages:

"BAD OSC ** "	for problems with the HFOs.
"BAD WAVE ** "	for oscillator waveform problems.
"BAD RES ** "	for resonance problems.
"BAD VCF ** "	for filter problems.

The two stars in each message represent a two digit number that indicates which voice or voices have failed that section of the Calibration. The number is a

decimal equivalent of a binary number, with each digit in the binary number corresponding to a particular voice. For example, if the display reads "***BAD OSC 63*** ", it would be broken down like this:

Decimal number -	63					
Value of binary digits -	32	16	8	4	2	1
Binary equivalent -	1	1	1	1	1	1
Corresponding bad voices -	V6	V5	V4	V3	V2	V1

So if the display reads "***BAD OSC 63*** " this means that all six of the voices have failed the Oscillator section of the tuning. Now if the display reads "***BAD WAVE 24*** ", it would be broken down like this:

Decimal number -	24					
Value of binary digits -	32	16	8	4	2	1
Binary equivalant -	0	1	1	0	0	0
Corresponding bad voices -	--	V5	V4	--	--	--

With "***BAD WAVE 24*** ", Voices four and five have failed the waveform Calibration.

Note: When trying to display the tuning failures, be sure to watch the display, because the failure displays are only shown for a short time.

When tuning failures are encountered, run the CALIBRATE function two more times. If there are no more failures after the third attempt, Tuning is OK. This will happen most often when the unit is cold.

3. DAC CALIBRATION - To enter this mode, the MATRIX-6 must be in MASTER EDIT parameter select mode. With parameter "52 CALIBRATE" displayed, first press and hold the **D** button. Next, press and hold the **C** button then press and hold the **B** button. The MATRIX-6 is now in DAC CALIBRATION mode and all three held buttons can be released. The display should read "***TUNING...***".

Caution: Be careful not to short any pins when zeroing the DAC.

With a DVM in the millivolt range, set the DAC output to 0.000 volts. The DAC output is measured at pin 6 of U712 on the Voice board. Connect the DVM ground to the ground leg of C13 (the leg toward rear of unit). C13 is directly behind U704. Adjust the DAC output to zero by turning the trimmer located directly behind U712. To exit DAC CALIBRATION mode press the MASTER button.

Note: After zeroing the DAC, the MASTER EDIT parameter number "52 CALIBRATE" must be preformed.

4. HFO CALIBRATION - To enter the High Frequency Oscillator Calibration mode, the MATRIX-6 must be in the MASTER EDIT parameter select mode.

Select parameter number "52 CALIBRATE". Now press and hold the **C** button, then press and hold the **B** button. The MATRIX-6 is now in HFO CALIBRATION mode and the held buttons can be released.

> **Caution:** when adjusting the coils of the HFO's, take care not to damage the very fragile core.
>
> When adjusting HFOs, be sure to remove adjusting tool from the core of the coil before taking the frequency measurement.

There are three High Frequency Oscillators which need to be adjusted when Calibrating HFO's. The adjustments are made first at L2, then L3 and last L1. Use a Frequency Counter to set the frequency of all three Oscillators between 3.500 and 3.505 MegaHZ. After L1 is set, the frequency of L2 and L3 should be double checked to make sure they have not changed.

> To adjust L2 connect Frequency Counter to pin 14 of U732.
> To adjust L3 connect Frequency Counter to pin 14 of U733.
> To adjust L1 connect Frequency Counter to pin 14 of U736.

After adjusting all three HFOs, exit HFO CALIBRATION mode by pressing MASTER button.

> **Note:** After Calibrating the HFOs, the MASTER EDIT parameter "52 CALIBRATE" must be preformed.

5. **PROCESSOR RESET & INITIALIZE** - First, make sure the AC power is turned off. Press and hold the red STORE button. Turn the AC power on and the display should have one or two characters flickering in the display. Now release the STORE button and the display will go blank for a few seconds. When the display resets, it will recall patch number "00". Although the unit will display patch "00", it will be playing the initialized patch.

POWER SUPPLY

VOLTAGE	TOLERANCES	J03 PIN # *
-5	+/- 200mv	1
+5A	+/- 200mv	3,4
+5B	+/- 200mv	5,6
+12	+/- 500mv	7,8
-12	+/- 500mv	9,10
-42	-41v to -45v	n/a **

* J03 is the connector located on the Power Supply board.

** The -42 volt supply is measured on the noncomponent side of the Display Board, at the point labeled "-42", located directly behind the fluorescent display.

MEMORY VOLTAGE

The memory voltage is measured at pin 28 of U7 orU8.

Power off: The voltage should range from +3 to +2.4 volts. If the voltage goes below +2.4, the MATRIX-6 may lose all or part of its memory.

Power on : The voltage should be 4.4 volts +/- 60mv.

TAD

MATRIX-6

BLOCK AND CABLING DIAGRAM

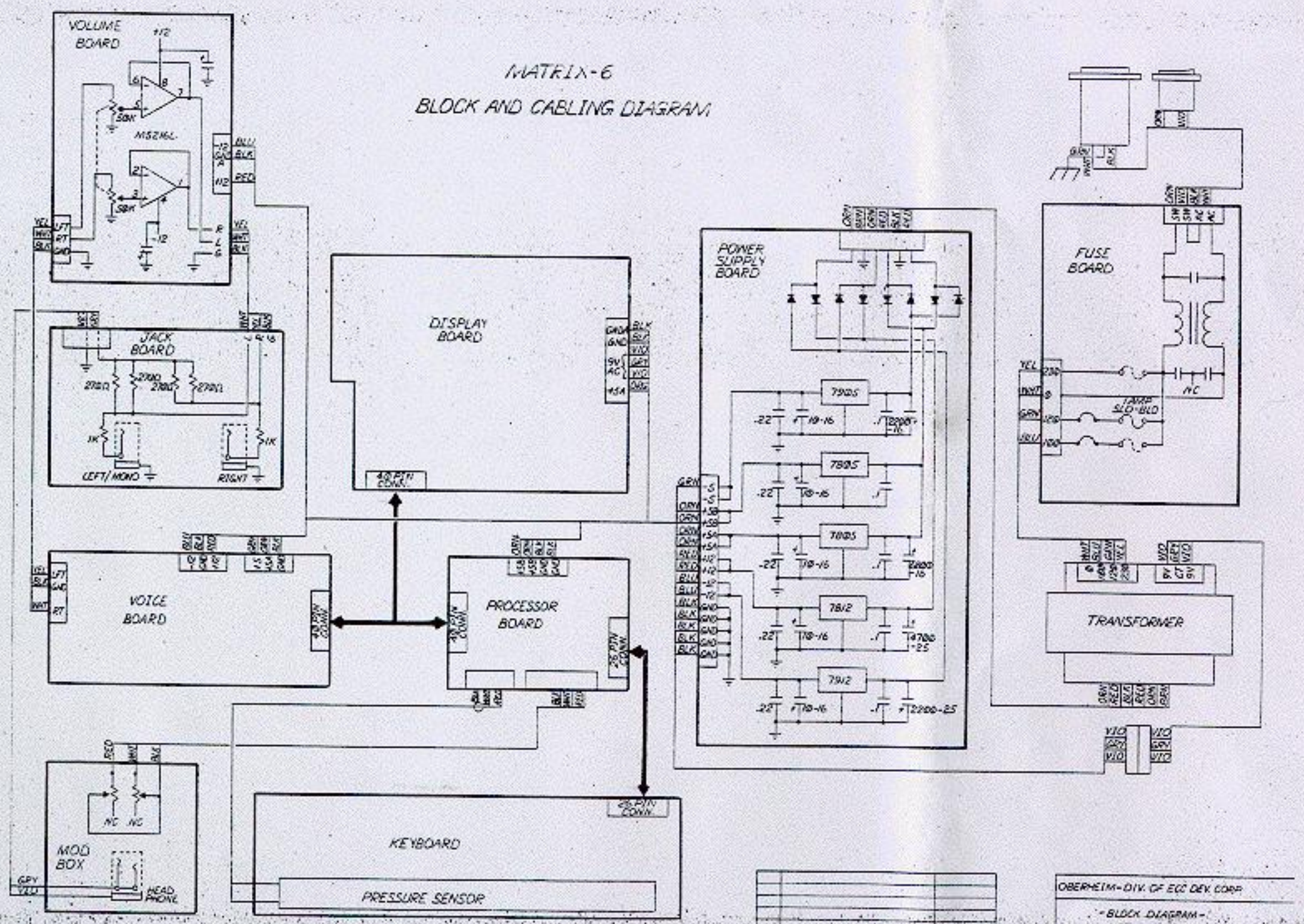

LTR	REVISION	DATE
A	INITIAL RELEASE	10-15-85

PAGE 1 OF 1

J.R

OBERHEIM - DIV. OF ECC DEV. CORP

- BLOCK DIAGRAM -
MATRIX-6

211A

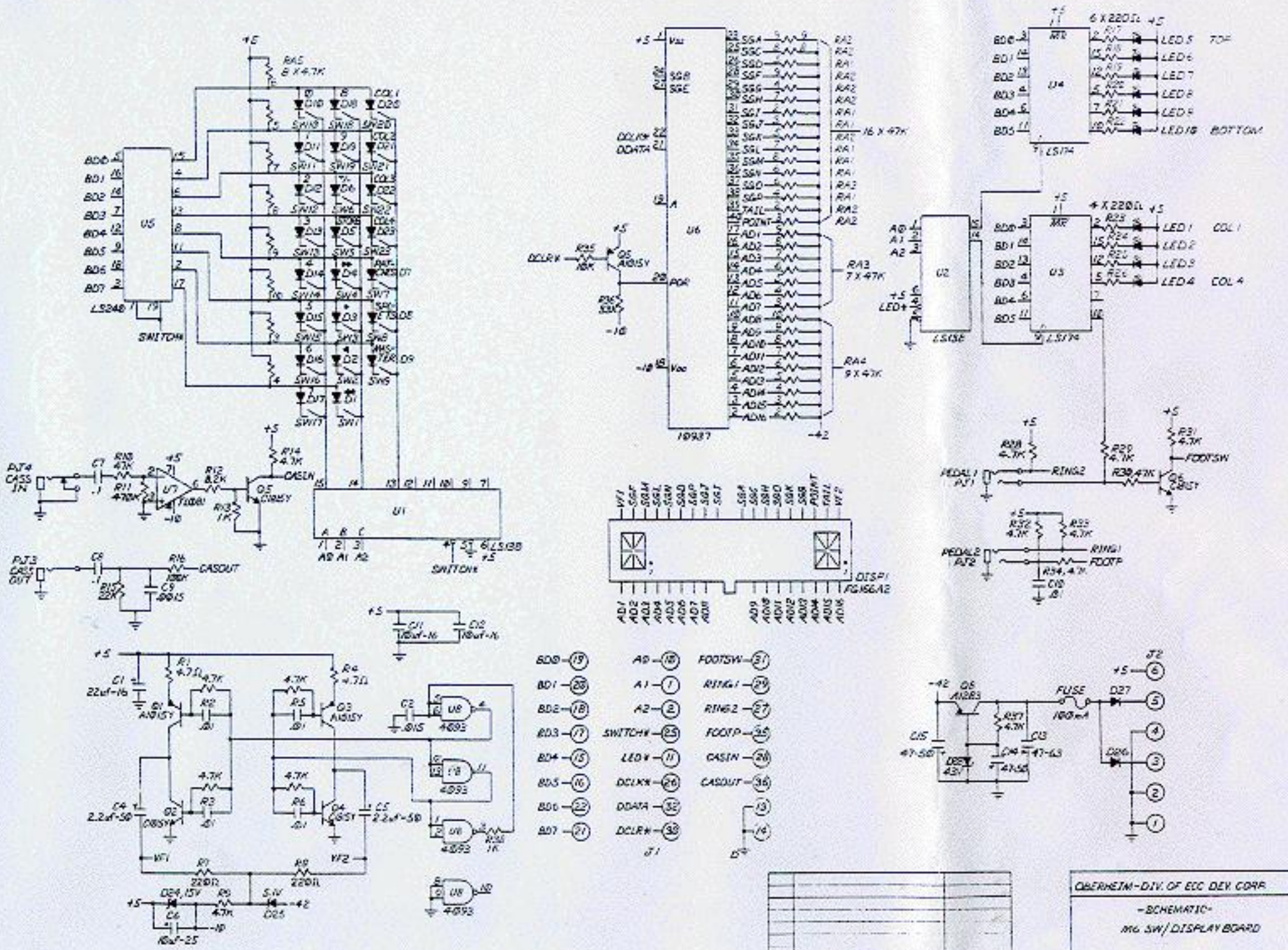

OBERHEIM-DIV. OF ECC DEV. CORP.
-SCHEMATIC-
MG SW/DISPLAY BOARD
A INITIAL RELEASE 10-15-85
REVISION DATE
2060

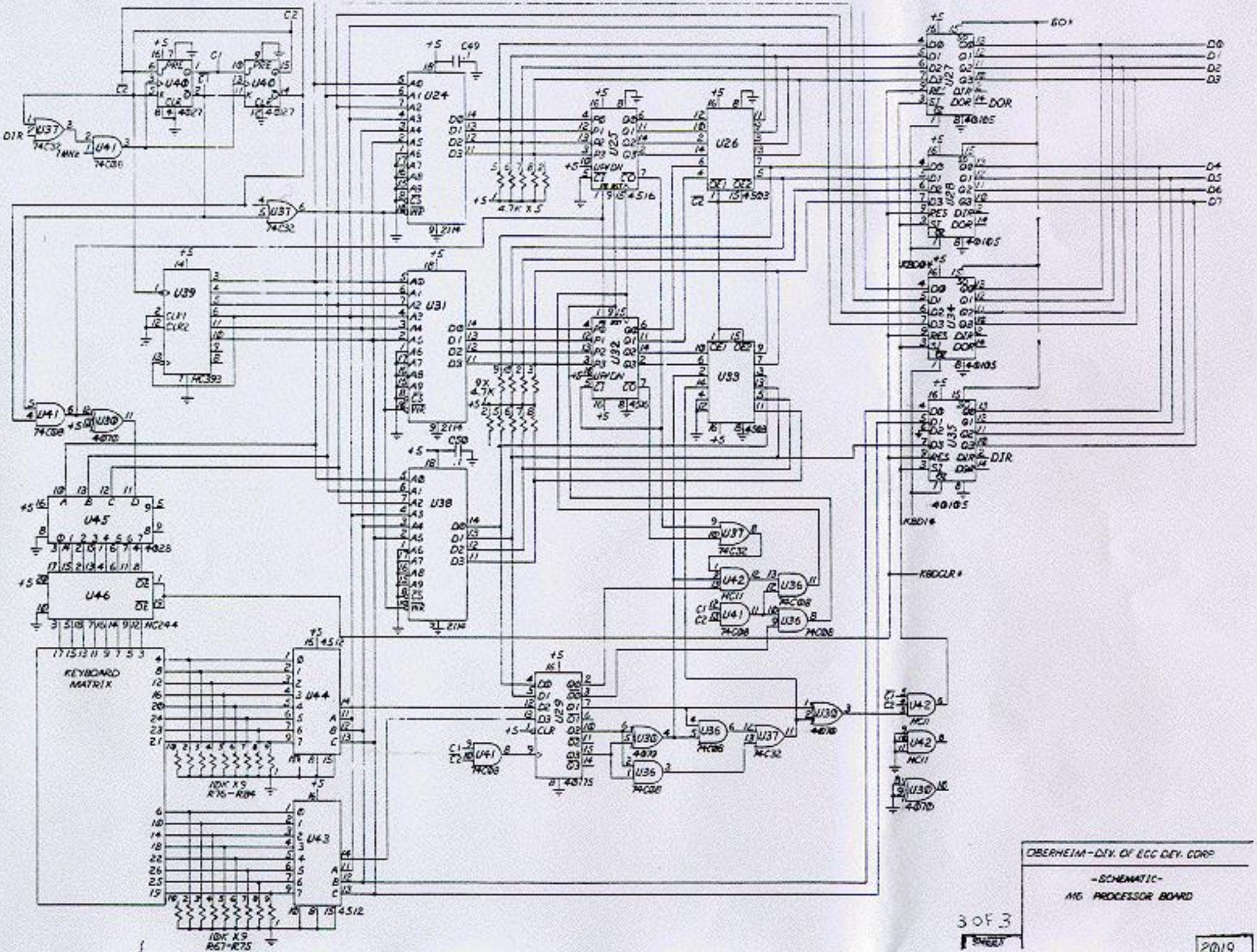

OBERHEIM - DIV. OF ECC DEV. CORP

- SCHEMATIC -

M6 PROCESSOR BOARD

3 OF 3 SHEET

2019

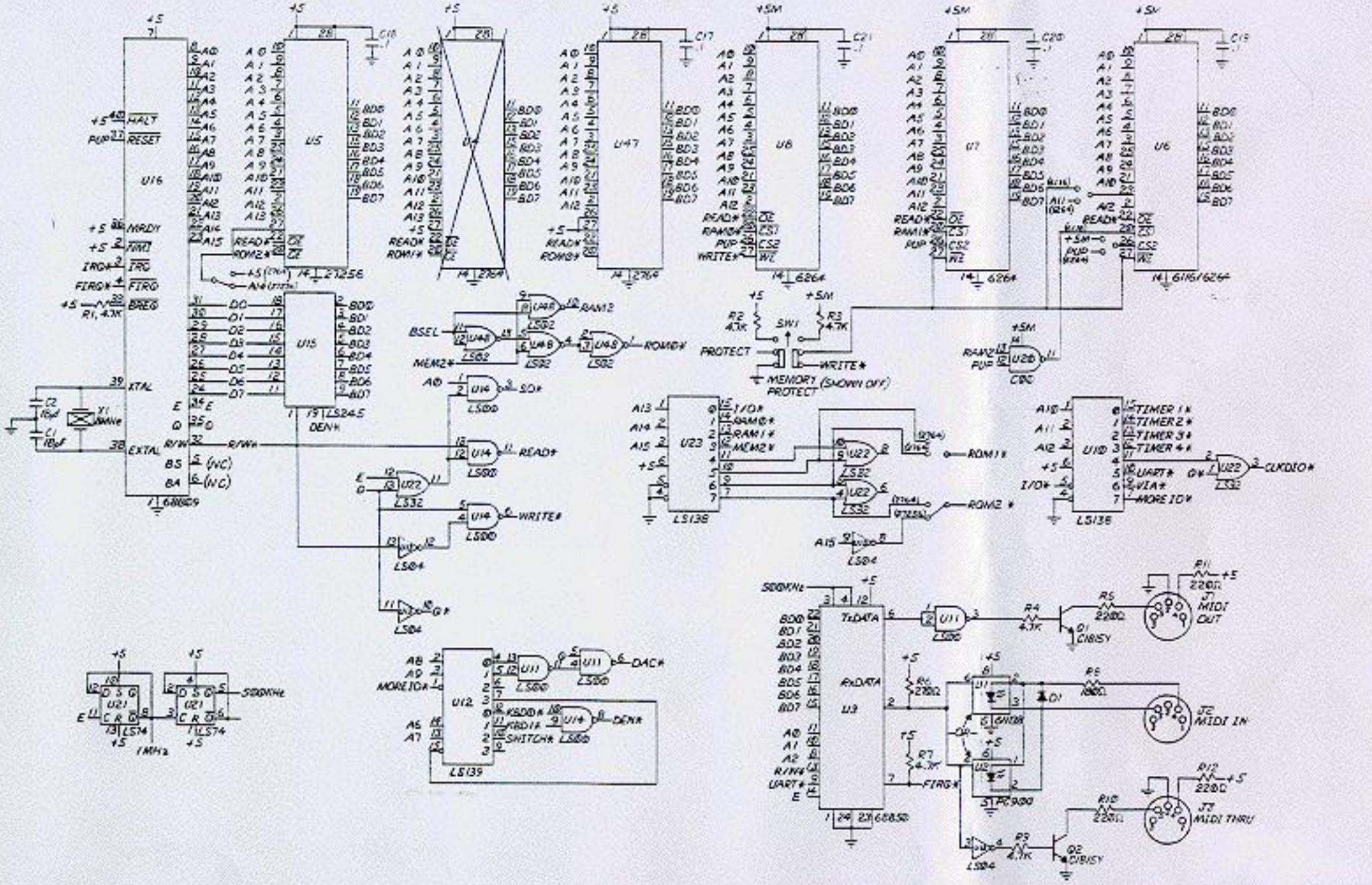

LTR	REVISION	DATE
A	INITIAL RELEASE	10-15-85

OBERHEIM – DIV. OF ECC DEV. CORP.

– SCHEMATIC –

M6 PROCESSOR BOARD

SHEET

REV

2019

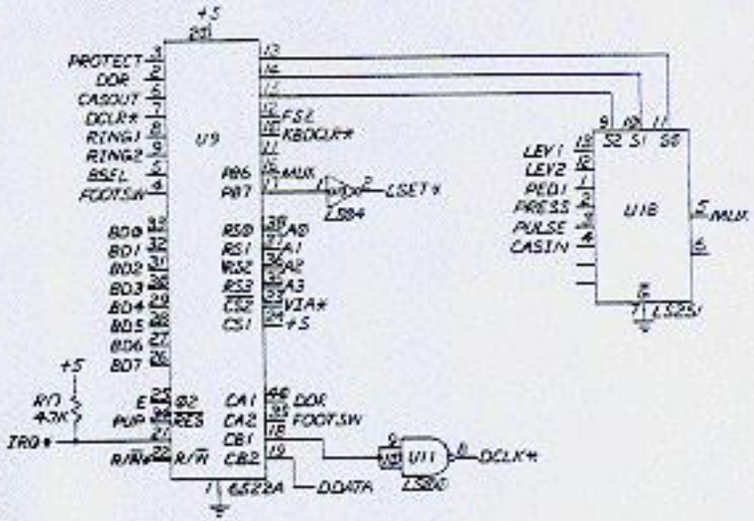

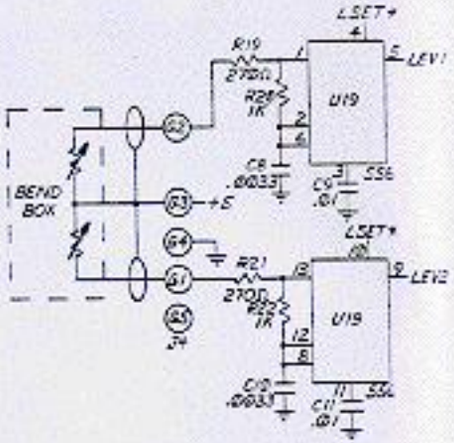

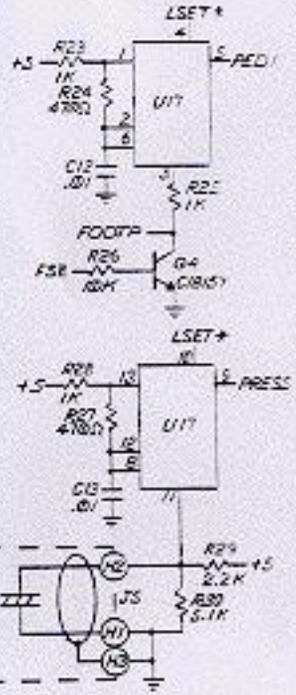

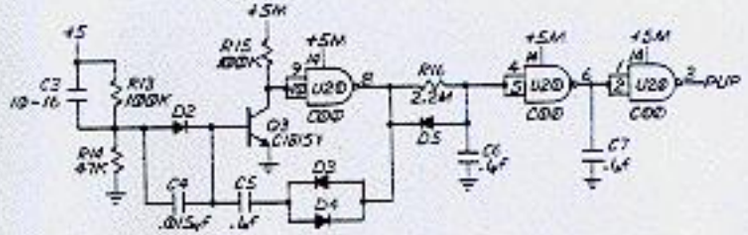

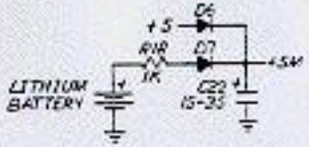

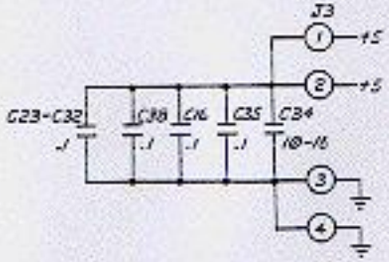

OBERHEIM - DIV. OF ECC DEV. CORP.

-SCHEMATIC-

M6 PROCESSOR BOARD

SHEET 2 OF 3

J.R

2019

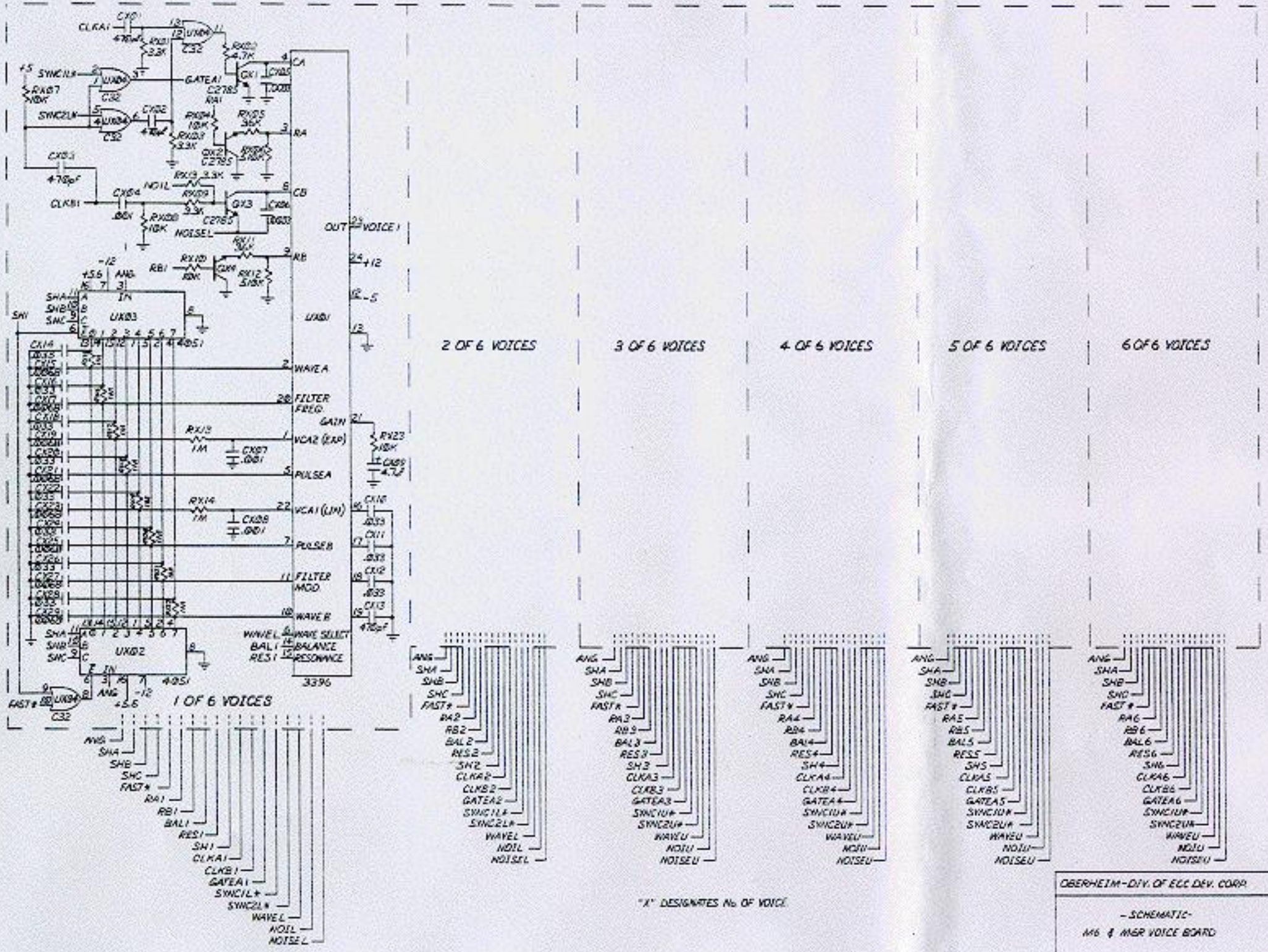
1 OF 6 VOICES
2 OF 6 VOICES
3 OF 6 VOICES
4 OF 6 VOICES
5 OF 6 VOICES
6 OF 6 VOICES
"X" DESIGNATES No. OF VOICE
OBERHEIM-DIV. OF ECC DEV. CORP.
-SCHEMATIC-
M6 & M6R VOICE BOARD

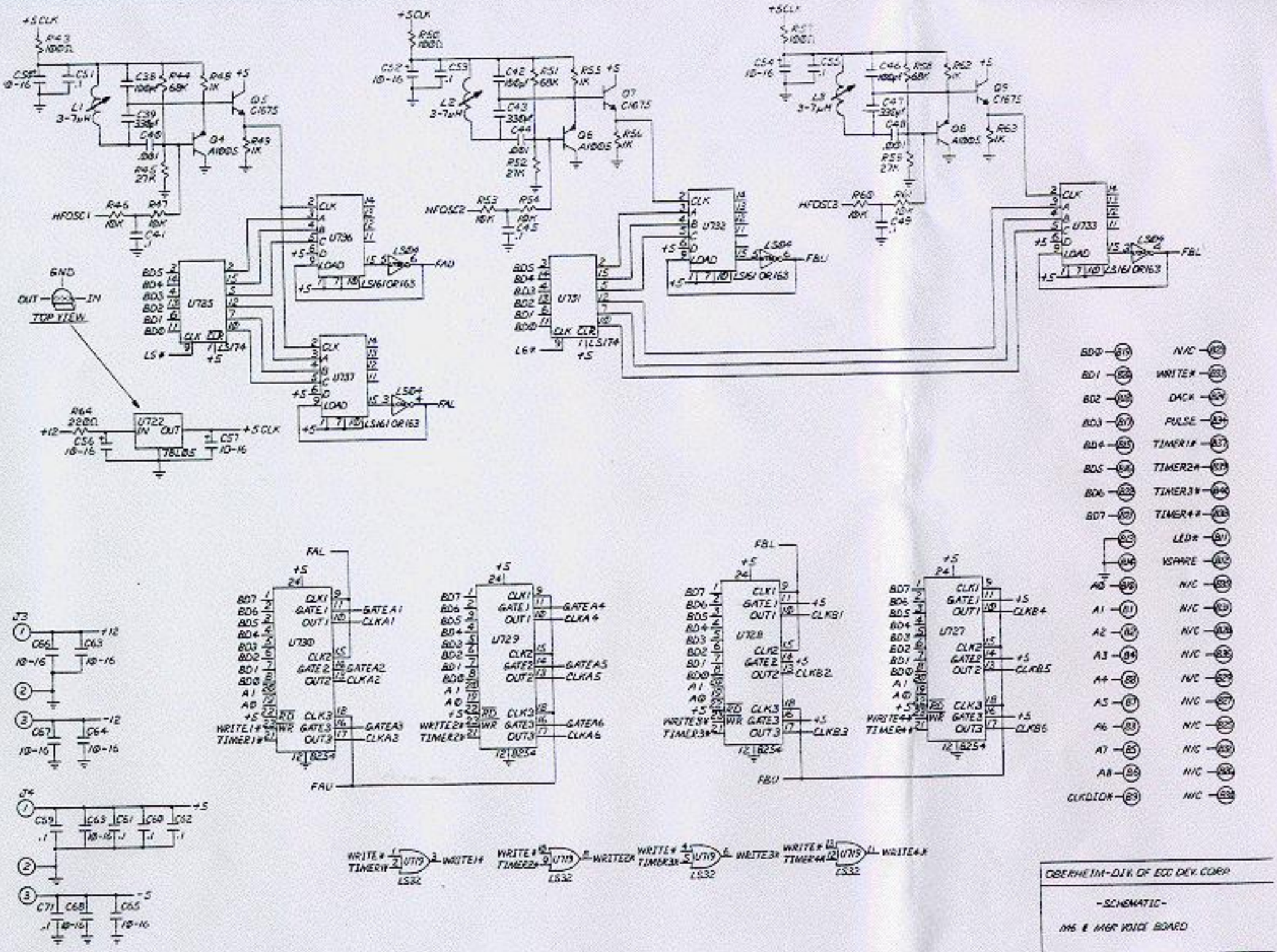
+5 CLK
R43 100Ω
C50 10-16
C51 .1
L1 3-7μH
C38 100pf
R44 68K
R45 1K
Q5 C1675
C39 330pf
C40 .001
Q4 A1005
R49 1K
R48 27K
HFOSC1
R46 10K
R47 10K
C41 .1
U736
LOAD
LS161 OR163
LS04
FAU
U735
LS#
LS174
GND
OUT
IN
TOP VIEW
R64 220Ω
+12
C56 10-16
U722
IN
OUT
78L05
C57 10-16
+5 CLK
R50 100Ω
C52 10-16
C53 .1
L2 3-7μH
C42 150pf
R51 68K
R55 1K
Q7 C1675
C43 330pf
C44 .001
Q6 A1005
R54 1K
R52 27K
HFOSC2
R53 10K
R54 10K
C45 .1
U732
FBL
U731
L6#
R56 100Ω
C54 10-16
C55 .1
L3 3-7μH
C46 100pf
R58 68K
R62 1K
Q9 C1675
C47 330pf
C48 .001
Q8 A1005
R63 1K
R55 27K
HFOSC3
R60 10K
R61 10K
C49 .1
U733
LS161 OR163
J3
C66 10-16
C63 10-16
C67 10-16
C64 10-16
J4
C59 .1
C69 10-16
C61 .1
C60 .1
C62 .1
C71 .1
C68 10-16
C65 10-16
U730
U729
U728
U727
FAL
FBL
GATE A1
CLKA1
GATE A2
CLKA2
GATE A3
CLKA3
GATE A4
CLKA4
GATE A5
CLKA5
GATE A6
CLKA6
CLKB1
CLKB2
CLKB3
CLKB4
CLKB5
CLKB6
WRITE1#
TIMER1#
WRITE2#
TIMER2#
WRITE3#
TIMER3#
WRITE4#
TIMER4#
8254
BD0
BD1
BD2
BD3
BD4
BD5
BD6
BD7
A0
A1
A2
A3
A4
A5
A6
A7
A8
CLKDIOX
N/C
WRITE#
DACK
PULSE
TIMER1#
TIMER2#
TIMER3#
TIMER4#
LED#
VSPARE
U719
LS32
OBERHEIM-DIV. OF ECG DEV. CORP.
-SCHEMATIC-
DMS 8 MGR VOICE BOARD
SHEET 2 OF 3
J.P.
2028

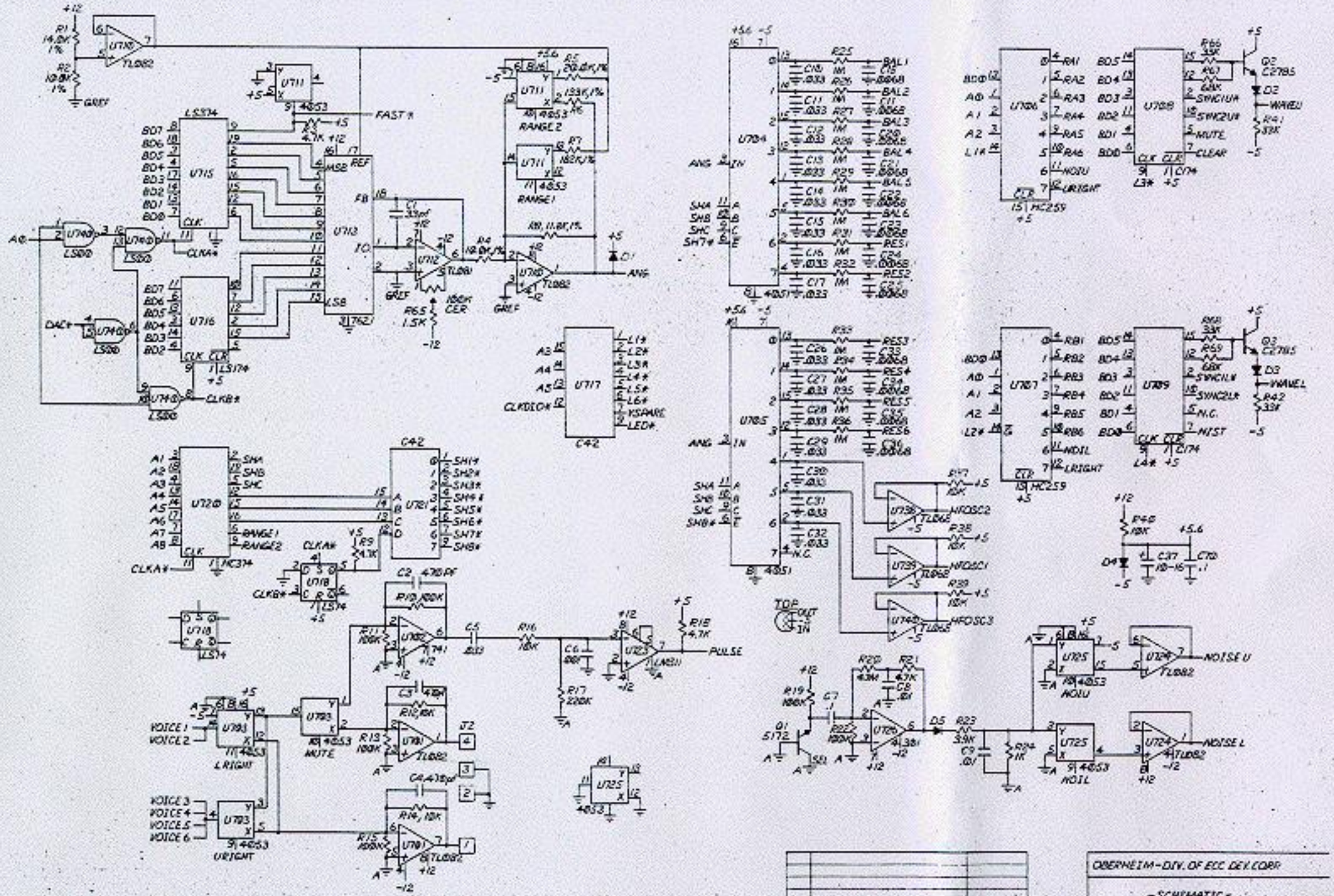
+12
R1 14.0K 1%
R2 10.0K 1%
GREF
U710 TL082
U711 4053
FAST A
RANGE 2
RANGE 1
R7 182K 1%
R8 11.8K 1%
R6 20.0K 1%
133K 1%
LS374
BD7 BD6 BD5 BD4 BD3 BD2 BD1 BD0
U715
U716
U713
U712 TL081
MSB
LSB
REF
FB
IO
C1 33pF
R4 10.0K 1%
R5 1.5K
100K CER
-12
D1
ANG
A0
LS00
U740
U741
U742
CLKA*
CLKB*
DAC*
CLK
LS174
+5
U717
A3 A4 A5
CLKDEC*
L1* L2* L3* L4* L5* L6*
KSHARE
LED*
C42
U704
ANG
SHA SHB SHC SH7*
R25 R26 R27 R28 R29 R30 R31 R32
BAL1 BAL2 BAL3 BAL4 BAL5 BAL6 RES1 RES2
C10 C11 C12 C13 C14 C15 C16 C17 .033
C18 C19 C20 C21 C22 C23 C24 C25 .0068
4051
U706
U708
BD0 A0 A1 A2 L1*
RA1 RA2 RA3 RA4 RA5 RA6 NOIU LRIGHT
HC259
BD5 BD4 BD3 BD2 BD1 BD0
R66 33K
R67 68K
SYNC1U*
SYNC2U*
MUTE
CLEAR
Q2 C2785
D2 WAVEU
R41 33K
L3* +5
U705
SHA SHB SHC SH8*
R33 R34 R35 R36 R37 R38 R39 R40
RES3 RES4 RES5 RES6
C26 C27 C28 C29 C30 C31 C32 C33 .033
C34 C35 C36 .0068
N.C.
U736 U739 U740 TL062
HFOSC2 HFOSC1 HFOSC3
U707
U709
L2* L4*
RB1 RB2 RB3 RB4 RB5 RB6 NOIL LRIGHT
R68 33K
R69 68K
SYNC1L*
SYNC2L*
N.C.
NTST
Q3 C2785
D3 WAVEL
R42 33K
U720
A1 A2 A3 A4 A5 A6 A7 A8
SHA SHB SHC
RANGE1 RANGE2
U721
SH1* SH2* SH3* SH4* SH5* SH6* SH7* SH8*
U718
CLKA* CLKB*
R9 4.7K
C2 470pF
R10 100K
R11 100K
U702
C5 .033
R16 10K
C6 68pF
R17 220K
U725 (LM311)
R18 4.7K
PULSE
TOP
OUT
IN
R20 4.3K
R21 4.7K
C8 .01
R19 100K
C7 .1
Q1 5172
R22 100K
U726
D5
R23 3.9K
C9 .01
R24 1K
U725
NOISE U
NOISE L
U724 TL082
VOICE 1 VOICE 2
VOICE 3 VOICE 4 VOICE 5 VOICE 6
U793
LRIGHT
URIGHT
MUTE
U701
R12 10K
R13 100K
R14 10K
R15 100K
C3 470pF
C4 470pF
J1 J2 J3 J4
R40 10K
D4
C37 10-16
C10 .1
-5
A
INITIAL RELEASE
10-15-85
LTR
REVISION
DATE
SHEET 1 OF 3
J.P
OBERHEIM - DIV. OF ECC DEV. CORP.
- SCHEMATIC -
MG & AMP VOICE BOARD
2028

Oberheim

Matrix-6

6-Voice Polyphonic MIDI Synthesizer
SERVICE MANUAL

Preliminary Edition - February 1986

©1986 OBERHEIM - A Division of E.C.C. Development Corporation
11650 Olympic Boulevard, Los Angeles, California 90064

All Rights Reserved. Reproduction in Whole or in Part is Prohibited Without Permission. Oberheim, The Oberheim Logo, MATRIX-6, MATRIX-12, XPANDER, Xk, OB-8, DSX, DMX, and DX are trademarks of E.C.C. Development Corporation.