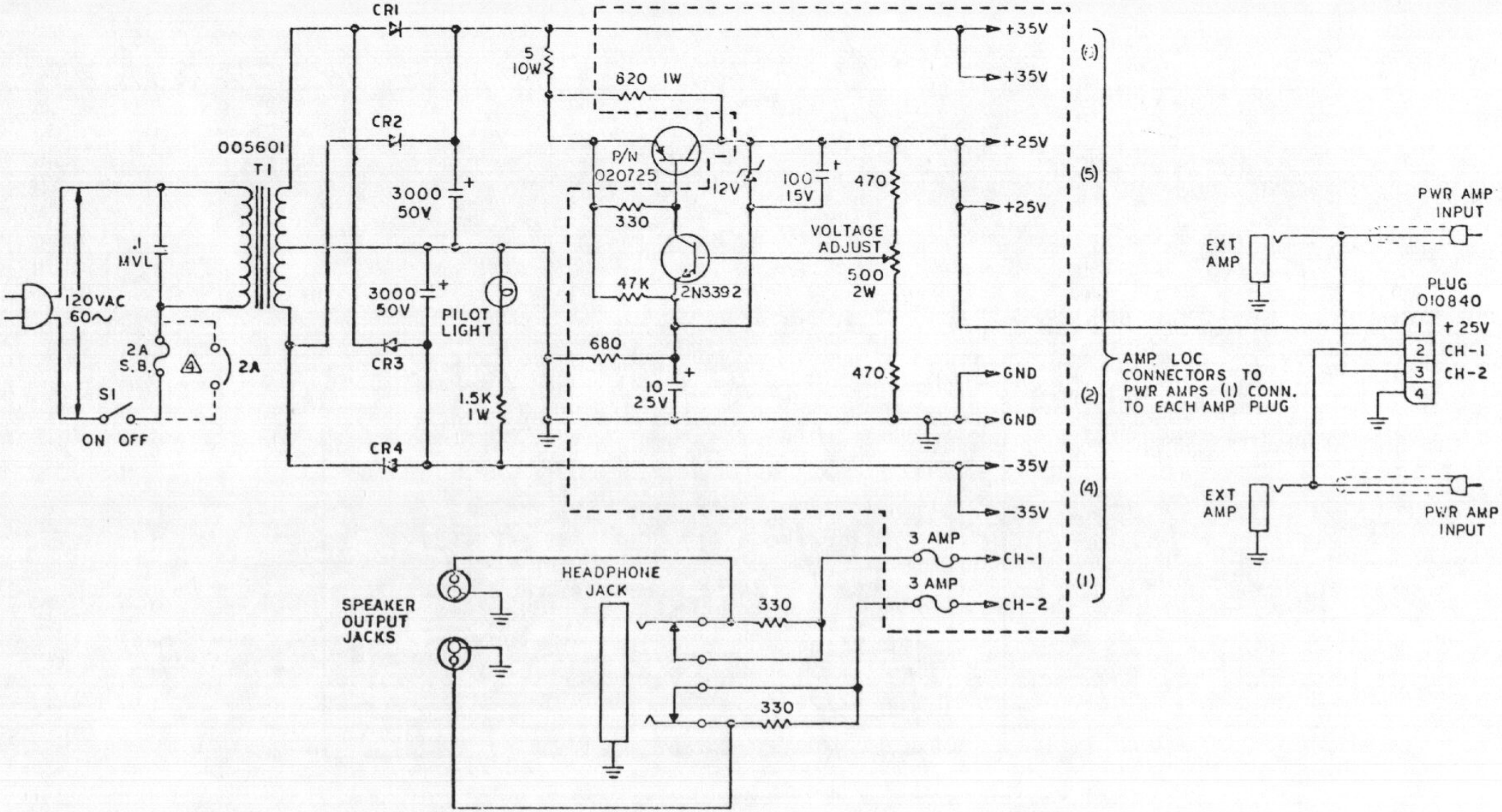

Δ CIRCUIT BREAKER IS USED, IN PLACE OF FUSE IN SOME MODELS.
3. ALL GND CONNECTIONS NOT ON CIRCUIT BOARD ARE MADE TO TRANSFORMER CENTER TAP.
2. DIODES CR1 THRU CR4 ARE 3A, 100V P/NO72934.
1. ALL RESISTANCE ARE IN OHMS, 1/2 WATT, 10%. ALL CAPACITANCE IN MICROFARADS.

Figure 11-10. Schematic — Power Supply Regulator Assembly (Peterson Design) — 80 Watt Suitcase