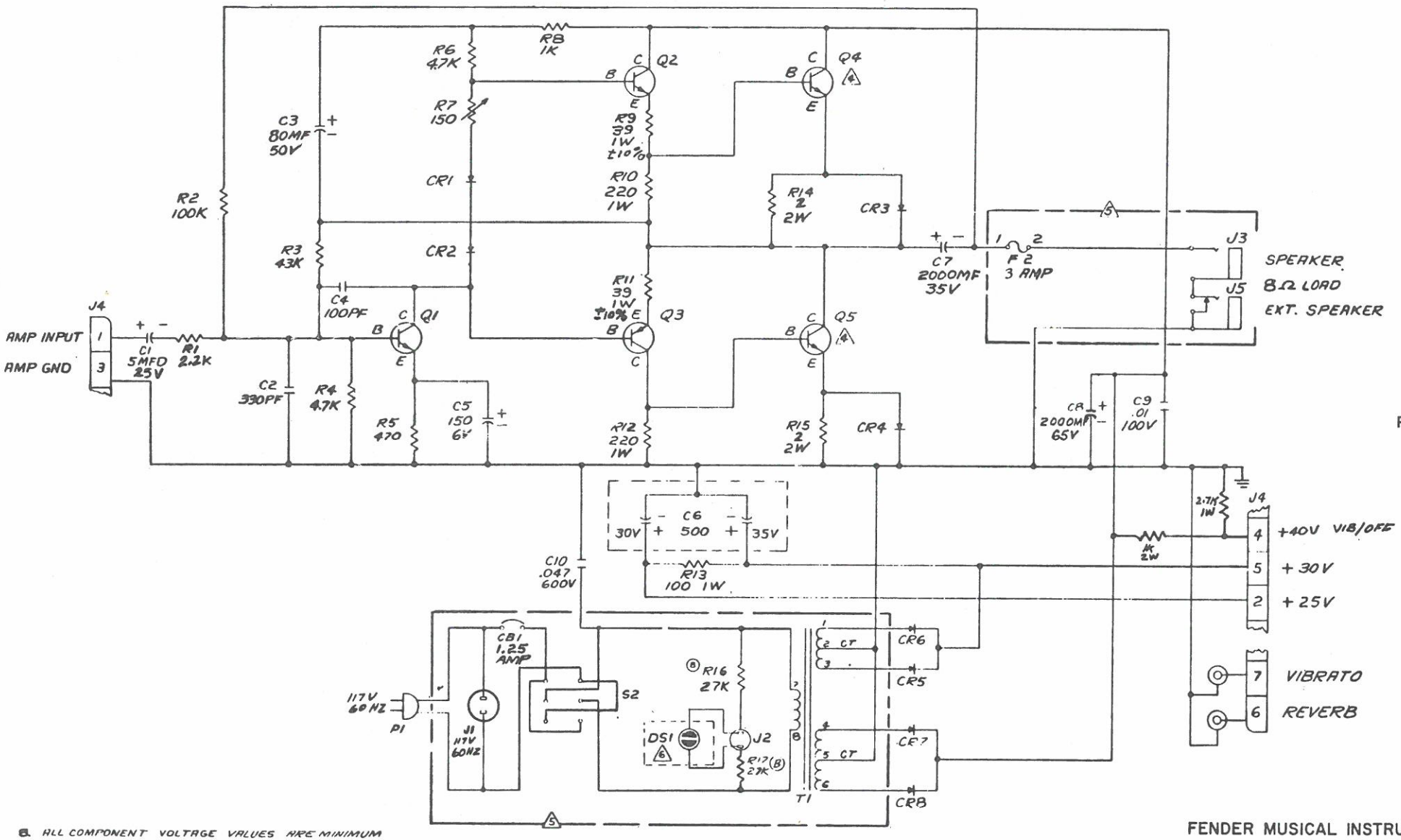

PN109652

8. ALL COMPONENT VOLTAGE VALUES ARE MINIMUM ONLY HIGHER VOLTAGE VALUES MAY BE USED.
7. ALL COMPONENTS ARE MOUNTED ON PC BOARD.
6. COMPONENT MOUNTED ON CONTROL PANEL.
5. COMPONENT MOUNTED ON CHASSIS.
4. COMPONENT MOUNTED ON HEATSINK.
3. LAST REFERENCE DESIGNATIONS USED, R17, C10, CR10, Q5, T1, P1, J5, S2, F2, CB1, AND DS1. (OMITTED S1 AND F1)
2. ALL CAPACITORS ARE RATED AT 50V DC, VALUES IN MICROFARADS ± 20%, ELECTROLYTIC -20% +150%.
1. ALL RESISTORS ARE ½ WATT, VALUES IN OHMS ± 10%.

NOTES: UNLESS OTHERWISE SPECIFIED.

FENDER MUSICAL INSTRUMENTS
CBS MUSICAL INSTRUMENTS
A DIVISION OF COLUMBIA BROADCASTING SYSTEMS INC.
FULLERTON, CALIFORNIA
U.S.A.

DWG. TITLE SCHEMATIC-POWER OUTPUT AMP 25W DELUXE REVERB			
Y66	SIZE B	DWG. NO. 056333	REV. E
SCALE NONE	MODEL SR1025	SHEET 1 OF 1	