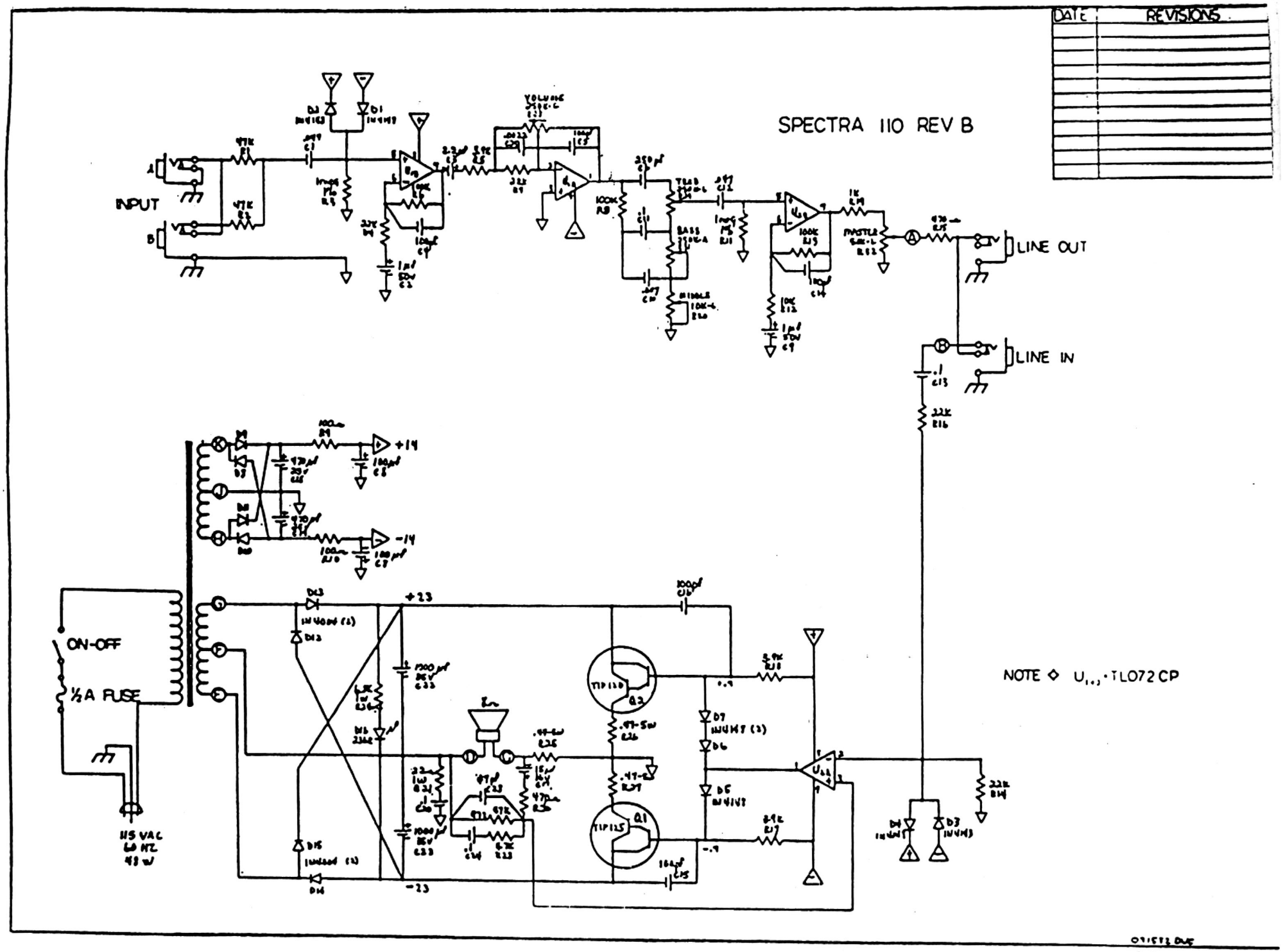
DATE
REVISIONS
SPECTRA 110 REV B
INPUT
LINE OUT
LINE IN
ON-OFF
½A FUSE
115 VAC
60 HZ
48 W
+14
-14
+23
-23
TIP120
TIP125
Q1
Q2
NOTE ◇ U1,2 · TL072CP