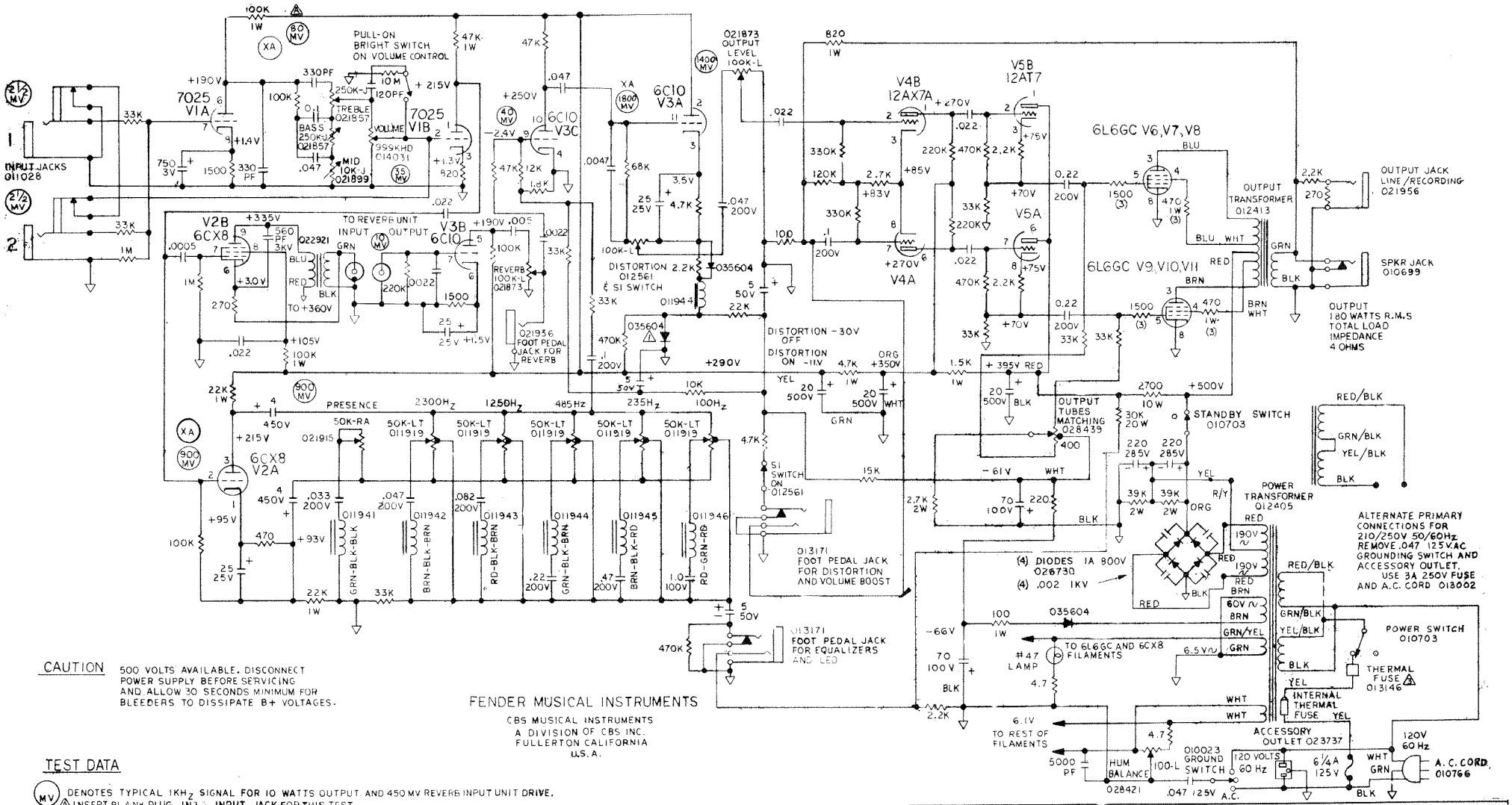

CAUTION 500 VOLTS AVAILABLE. DISCONNECT POWER SUPPLY BEFORE SERVICING AND ALLOW 30 SECONDS MINIMUM FOR BLEEDERS TO DISSIPATE B+ VOLTAGES.

FENDER MUSICAL INSTRUMENTS

CBS MUSICAL INSTRUMENTS
A DIVISION OF CBS INC.
FULLERTON CALIFORNIA
U.S.A.

TEST DATA

(MV) DENOTES TYPICAL 1KHz SIGNAL FOR 10 WATTS OUTPUT AND 450 MV REVERB INPUT UNIT DRIVE.
(A) INSERT BLANK PLUG INTO INPUT JACK FOR THIS TEST.
CONTROL SETTINGS - EQUALIZERS AT MID POSITION.
DISTORTION AND PRESENCE AT MINIMUMUM.
OTHERS AT MAXIMUM.

XA - USE 0.1MFD 600V CAPACITOR IN SERIES WITH GENERATOR.

D.C. VOLTAGES READ WITH NO SIGNAL INPUT AND DISTORTION "OFF".

⚠ 035604 CONDUCTS WITH DISTORTION "ON".

NOTES: UNLESS OTHERWISE SPECIFIED

(3) USED IN SOME VERSIONS.
2. ALL RESISTORS ARE 1/2 W 10%
1. ALL CAPACITORS AT LEAST 600 W.V.D.C.
NOTES: UNLESS OTHERWISE SPECIFIED

SAMPLES OF FIRST ARTICLE PARTS MUST BE APPROVED BY ☐ FENDER ☐ ROGERS ☐ RHODES R & D ENG. BEFORE STARTING PRODUCTION

HEAT TREATMENT | UNLESS OTHERWISE SPECIFIED | DWN | CHK | APPD M.E. | APPD E.E. | DATE | MATERIAL | FINISH - TO C.B.S. SPEC. | NEXT ASS'Y NO. | USED ON | DO NOT SCALE DRAWING

Fender / Rogers / Rhodes
CBS MUSICAL INSTRUMENTS — A DIVISION OF CBS, INC.
FULLERTON, CALIFORNIA 92631

PART NAME: SCHEMATIC 180 WATT W/LED FOOTSWITCH SUPER TWIN REVERB

RELEASE | SIZE D | PART NO. 015870 | REV A | SCALE | MODEL NO.