LESLIE MODELS 125-225
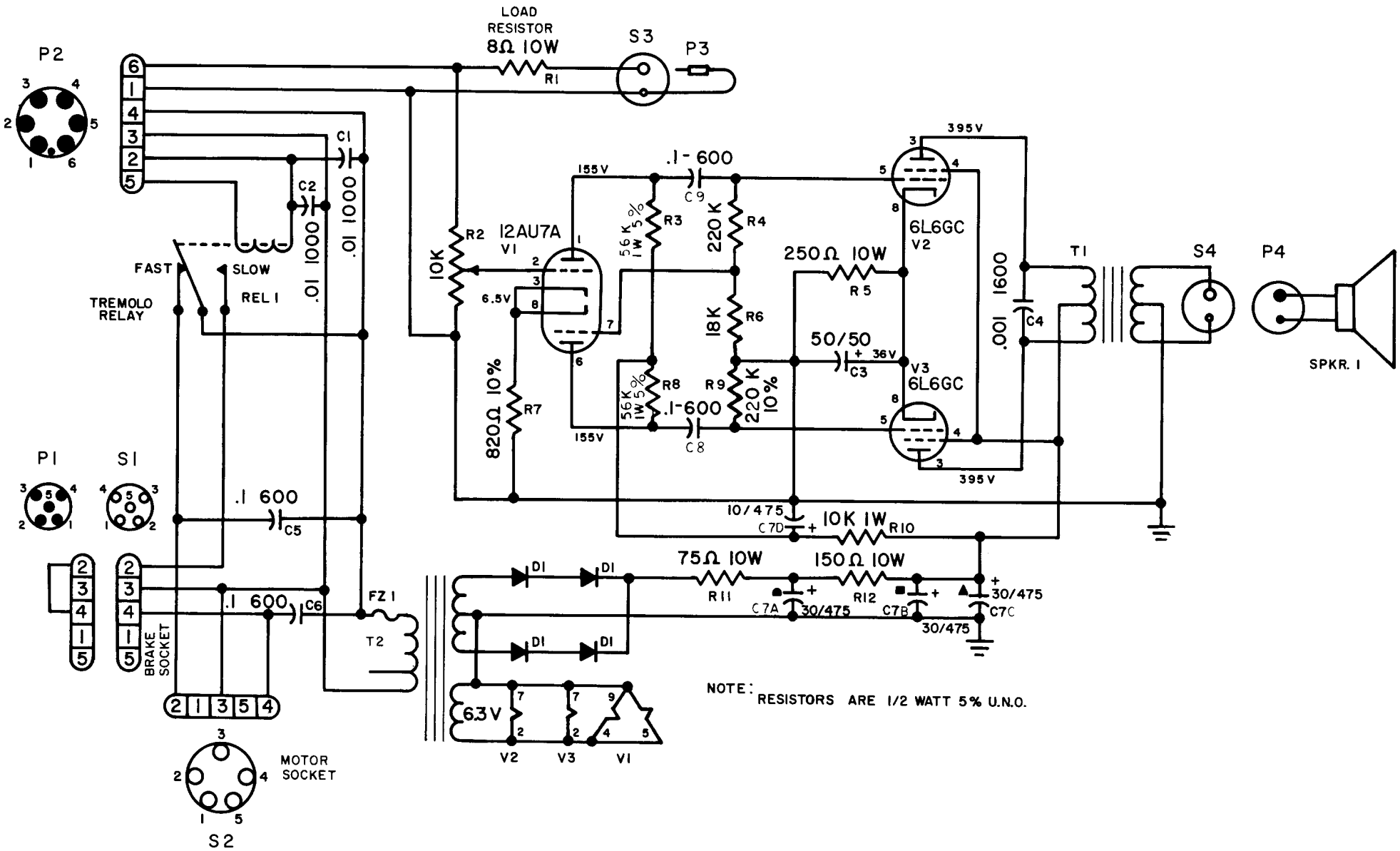
AMPLIFIER ASSEMBLY