# TYPE 22H POWER AMPLIFIERS

## Schematic for 22H Cabinets below Serial 22750, 22R Cabinets below Serial 40900

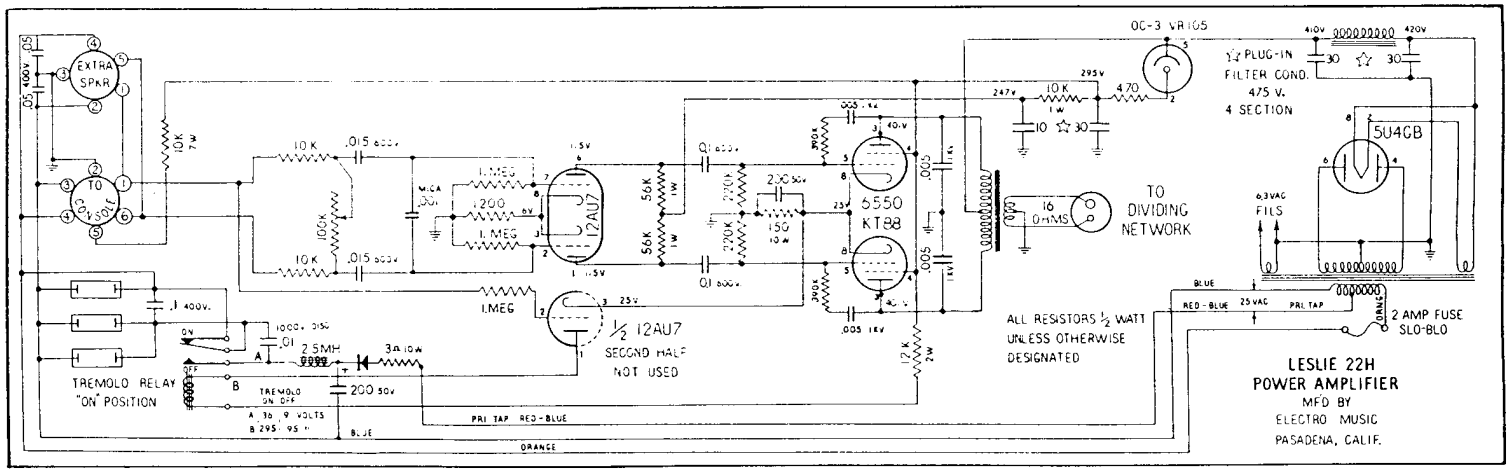


## Schematic for 22H Cabinets above Serial 22750, 22R Cabinets above Serial 40900

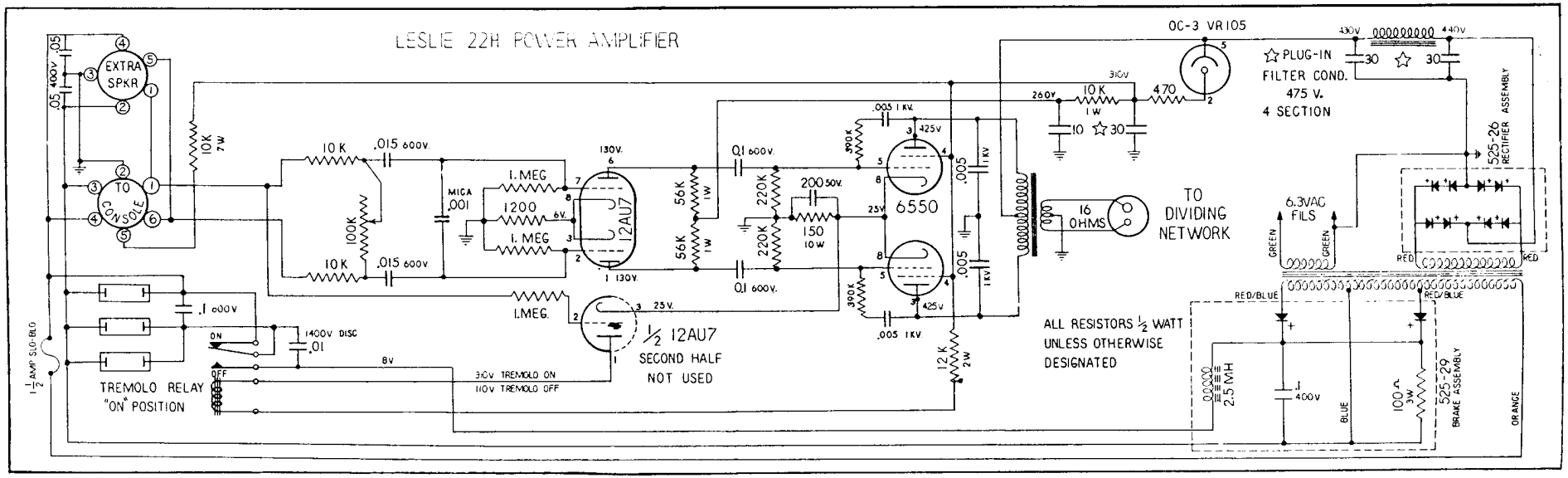


**For 122 Cabinets (Serial 24500 and above) and 122R Cabinets (Serial 42500 and above) see Owner's Manual for 122 and 122R.**

**ELECTRO MUSIC** **P. O. Box 2267 D** **Pasadena, California**