Label scan by Ron Yost
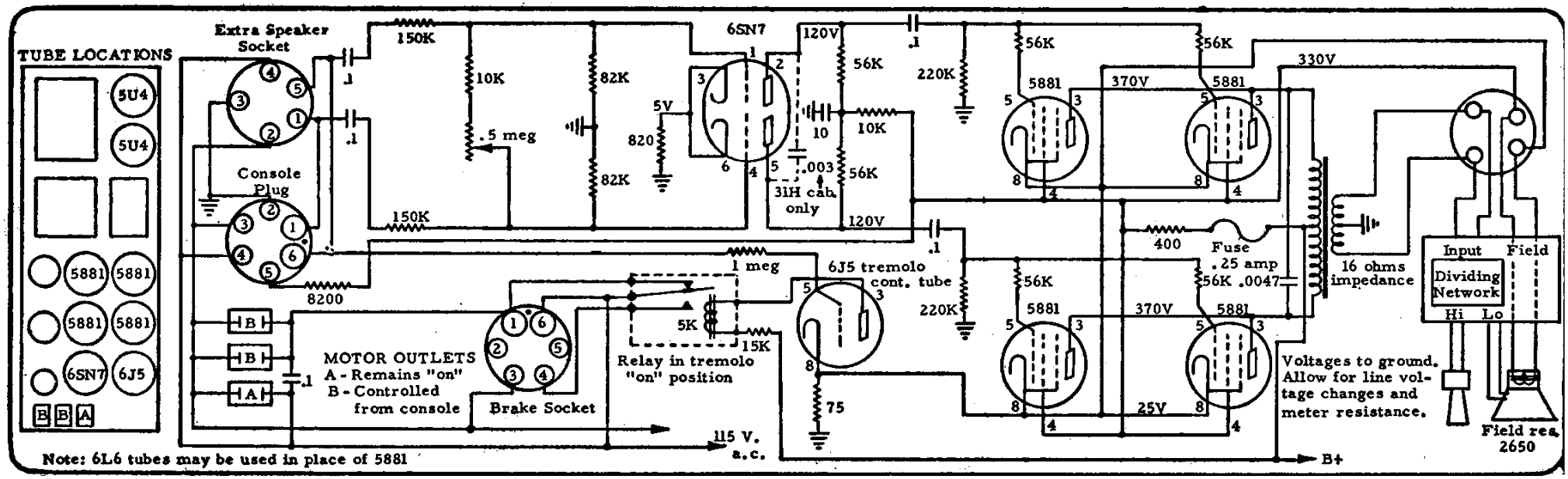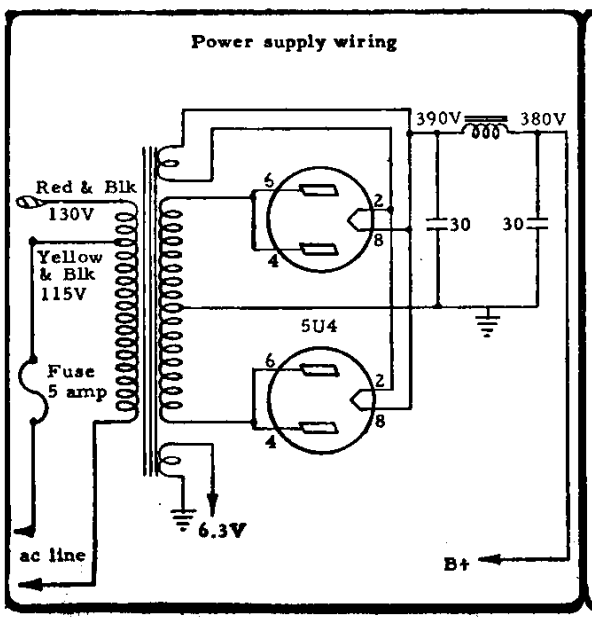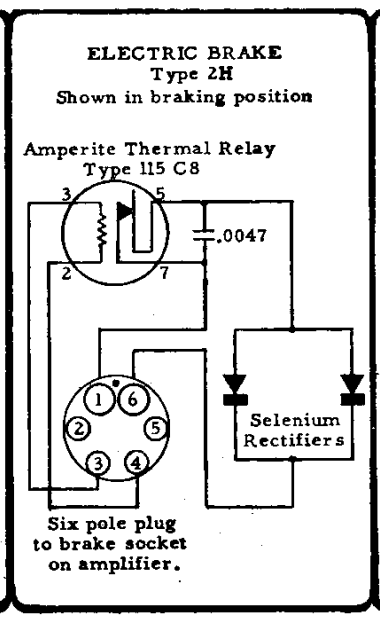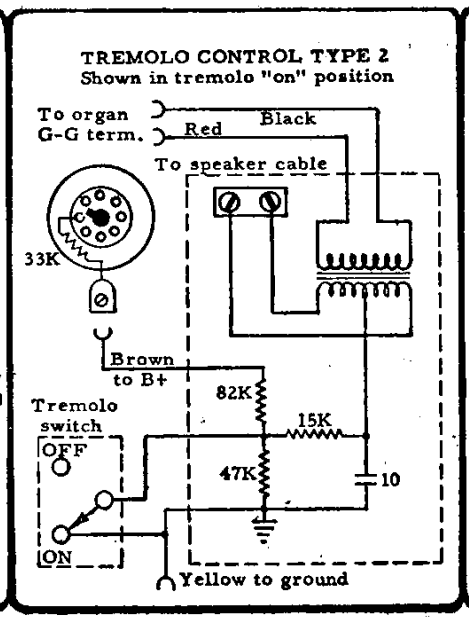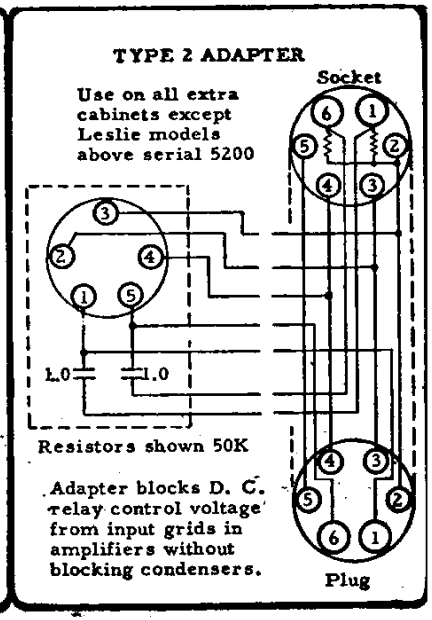
Leslie 32H, Series Three amplifier