DWG. NO.	SHT	REV:
MN 052 120	1	08

ECO#	REV:	DESCRIPTION	REV. BY:	APP. BY:	DATE
	01	PROTOTYPE RELEASE 01	SOBEK		16.2.2001
	02	PROTOTYPE RELEASE 02	SOBEK		20.2.2001
	03	PROTOTYPE RELEASE 03	SOBEK		2.3.2001
	04	PROTOTYPE RELEASE 04	SOBEK		6.8.2001
	05	PROTOTYPE RELEASE 05	SOBEK		9.8.2001
	06	PROTOTYPE RELEASE 06	SOBEK		27.8.2001
	07	PROTOTYPE RELEASE 07	SOBEK		20.9.2001
	08	PROTOTYPE RELEASE 08	SOBEK		15.10.2001

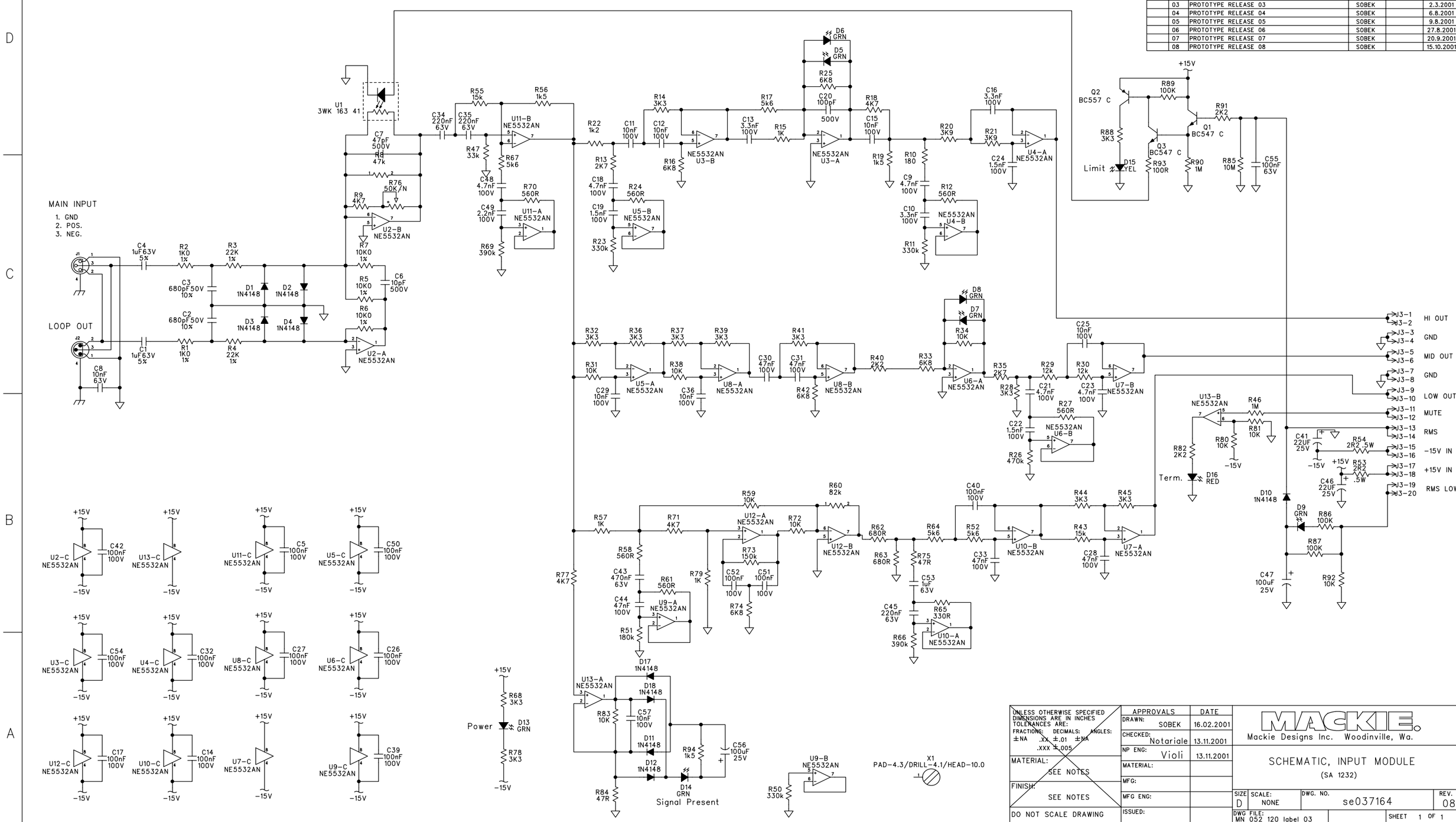

UNLESS OTHERWISE SPECIFIED DIMENSIONS ARE IN INCHES
TOLERANCES ARE:
FRACTIONS: ±NA DECIMALS: .XX ±.01 .XXX ±.005 ANGLES: ±NA

MATERIAL: SEE NOTES

FINISH: SEE NOTES

DO NOT SCALE DRAWING

APPROVALS		DATE
DRAWN:	SOBEK	16.02.2001
CHECKED:	Notariale	13.11.2001
NP ENG:	Violi	13.11.2001
MATERIAL:		
MFG:		
MFG ENG:		
ISSUED:		

MACKIE
Mackie Designs Inc. Woodinville, Wa.

SCHEMATIC, INPUT MODULE
(SA 1232)

SIZE	SCALE:	DWG. NO.	REV.
D	NONE	se037164	08

DWG FILE: MN 052 120 label 03 SHEET 1 OF 1

©2002 Mackie Designs Inc. All rights reserved

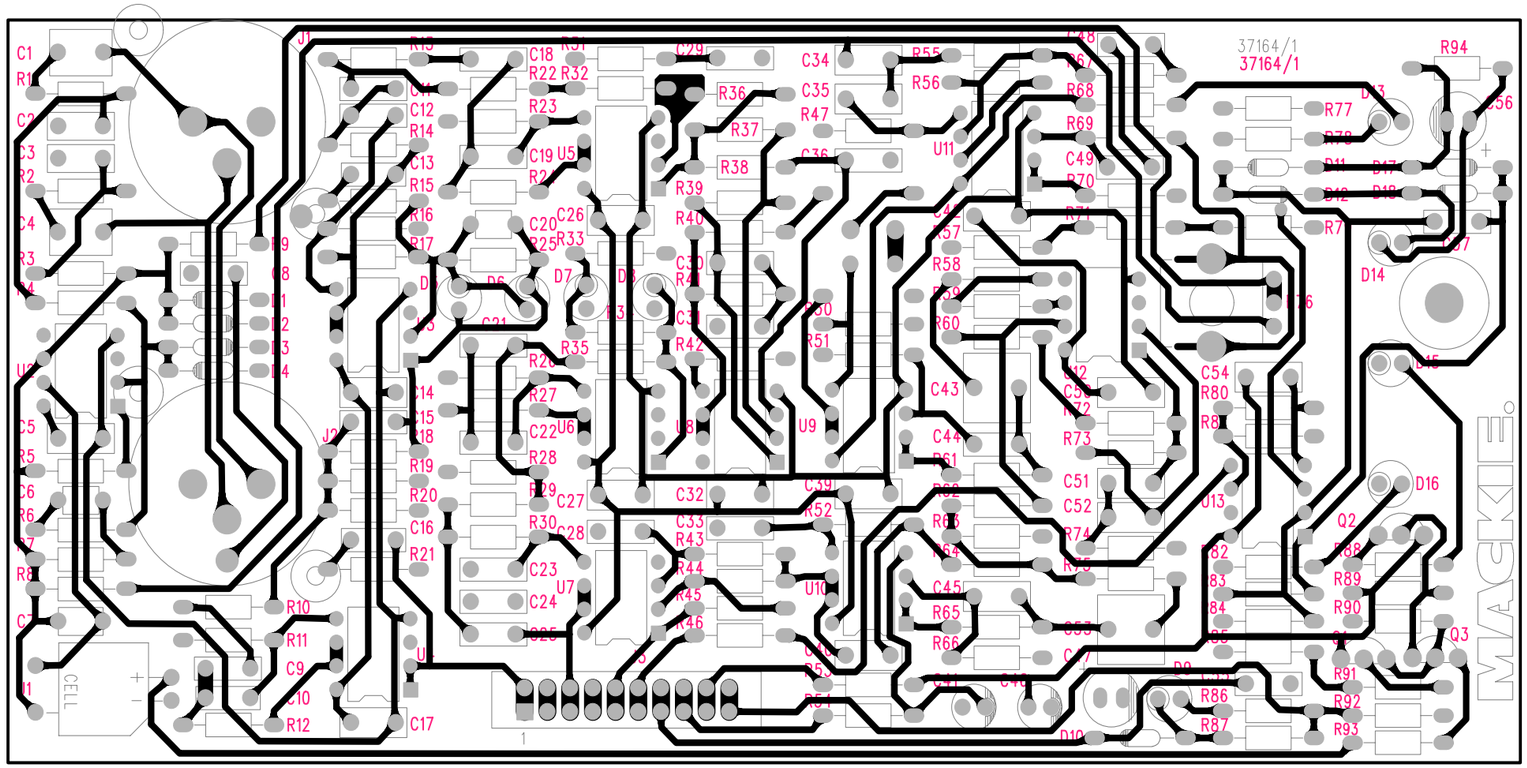

Top Surface

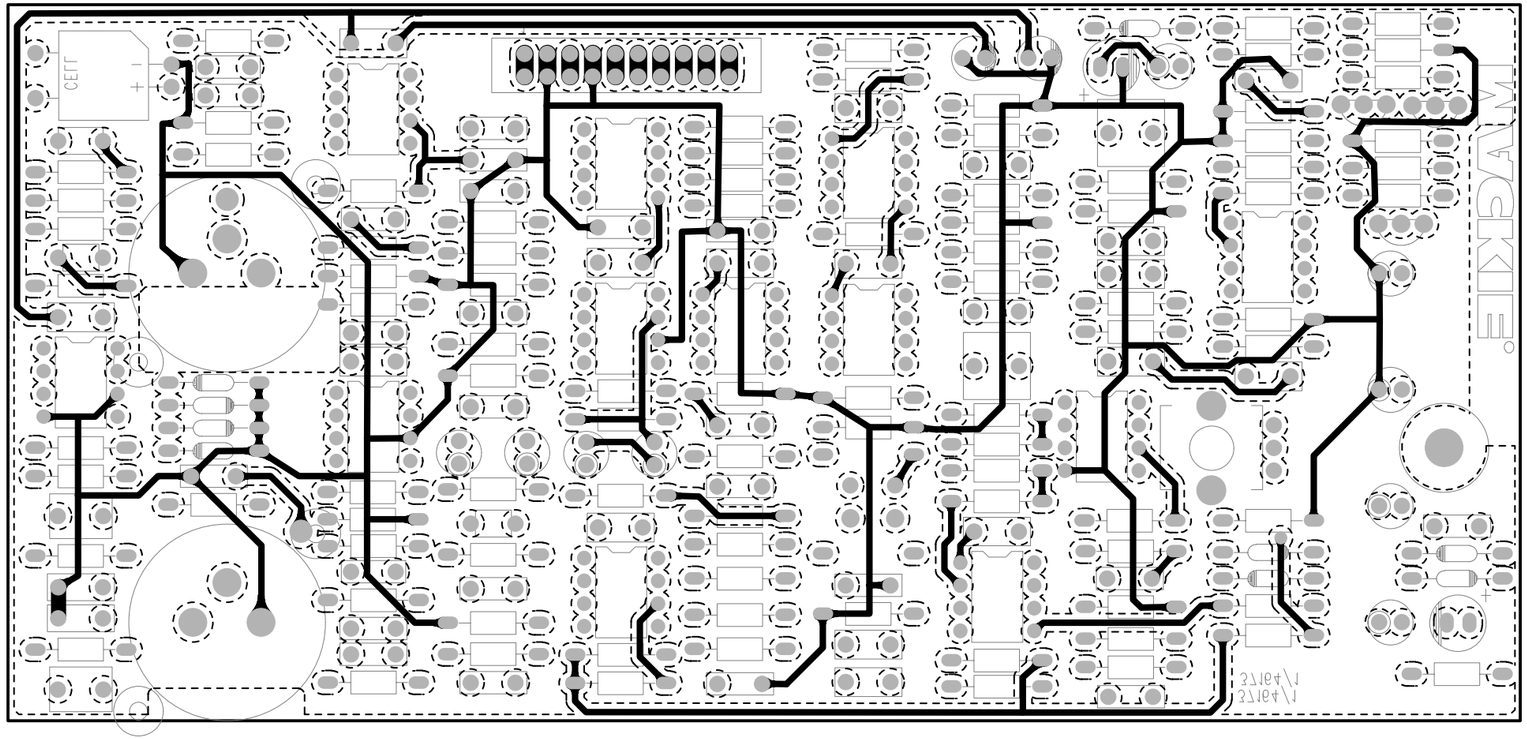

Bottom Surface
Dotted lines are the copper pour layer boundaries