ignorelayers 4

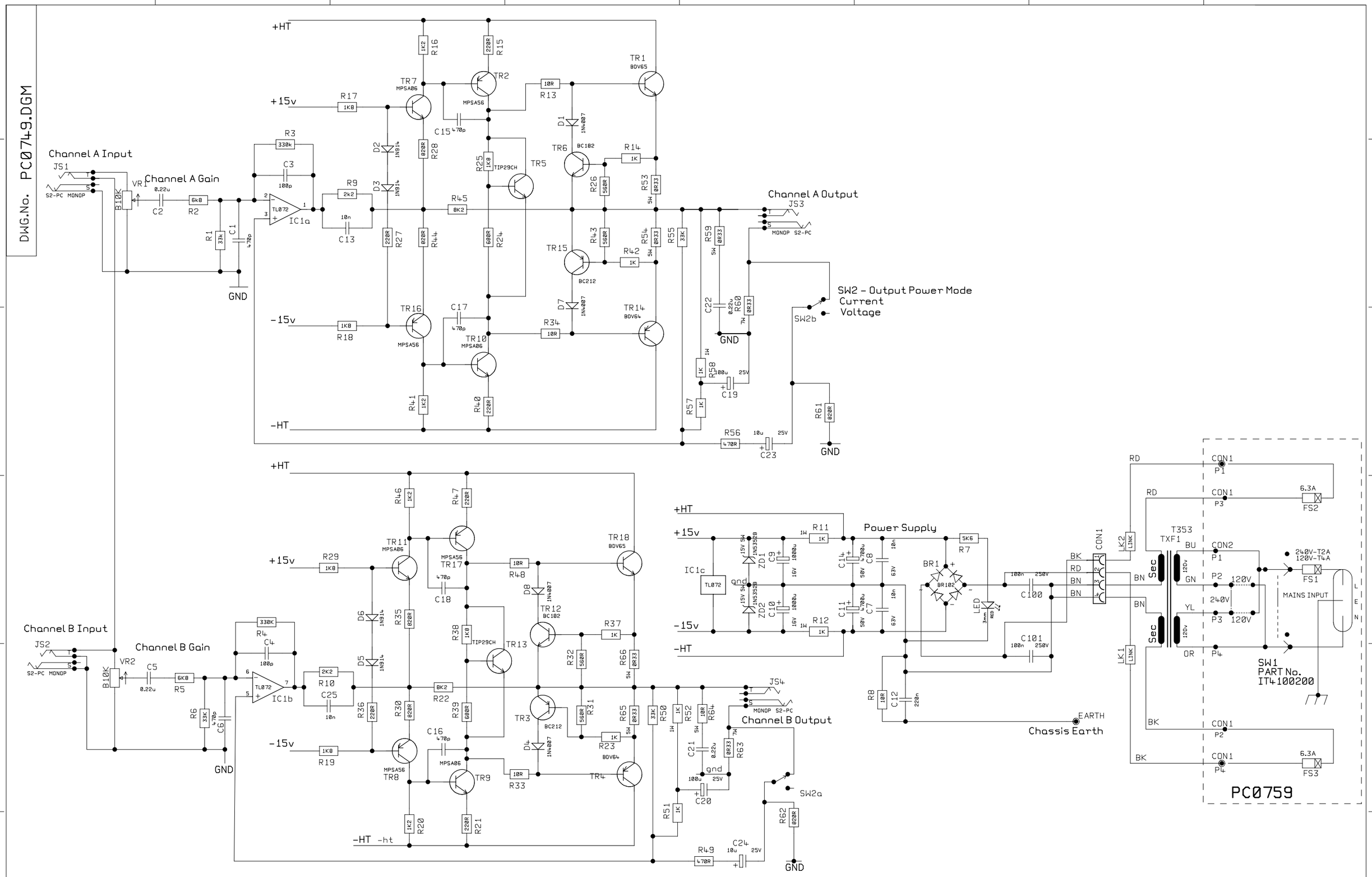

ISS	ECO NUMBER	DATE
7	1503	26/03/98
6	0329	16/03/93
5	0200	02/04/92

ALL OTHER HOLES = X = (THROUGH PLATED)

A			E			J			N		
B			F			K			P		
C			G			L			Q		
D			H			M			R		

MATERIAL
MATERIAL THICKNESS
DRAWN T.F DATE 03/04/92
CHECKED DATE
APPROVED DATE

DIMENSIONS IN
TOLERANCE (UNLESS UTHERWISE STATED)
MODEL 8008

Marshall

© MARSHALL AMPLIFICATION PLC
DENBIGH ROAD, BLETCHLEY, MILTON KEYNES, MK1 1DQ.
TEL (01908) 375411 FAX (01908) 376118

TITLE CCT DIAGRAM

DWG.No PC0749.DGM ISS 7