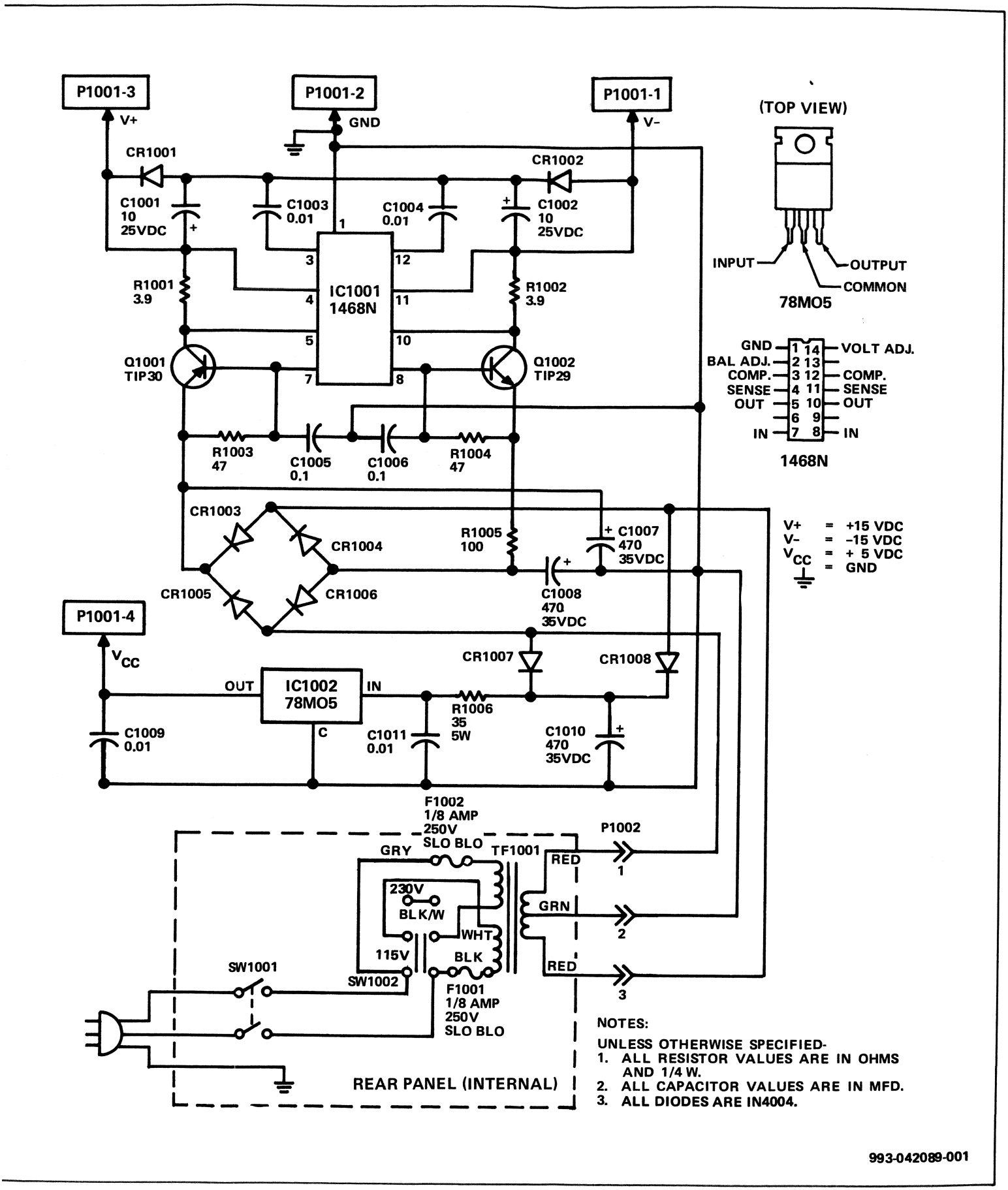

FIGURE 7-2 POWER SUPPLY SCHEMATIC DIAGRAM

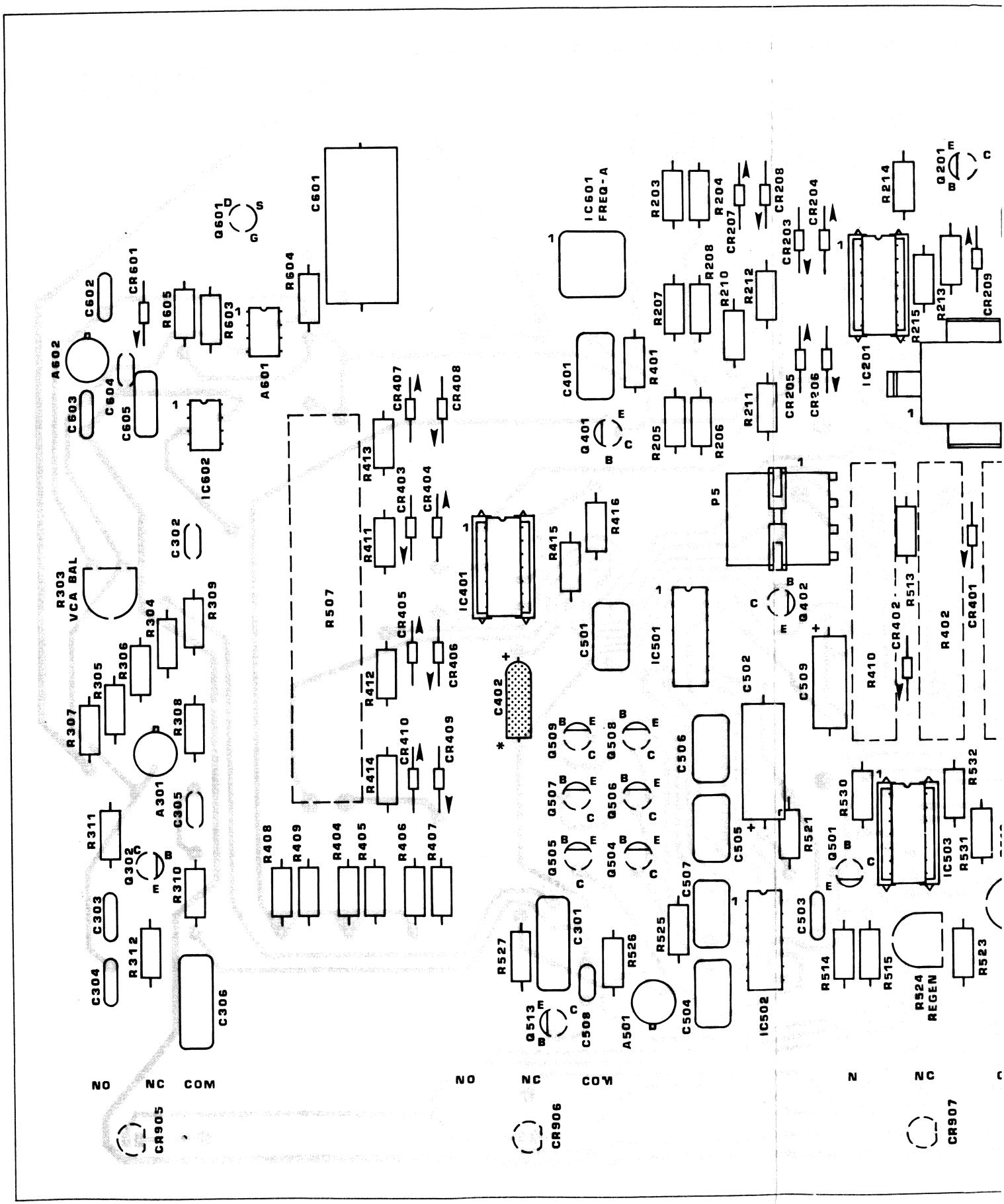

FIGURE 7-3 OVERALL PRINTED CIRCUIT BOARD

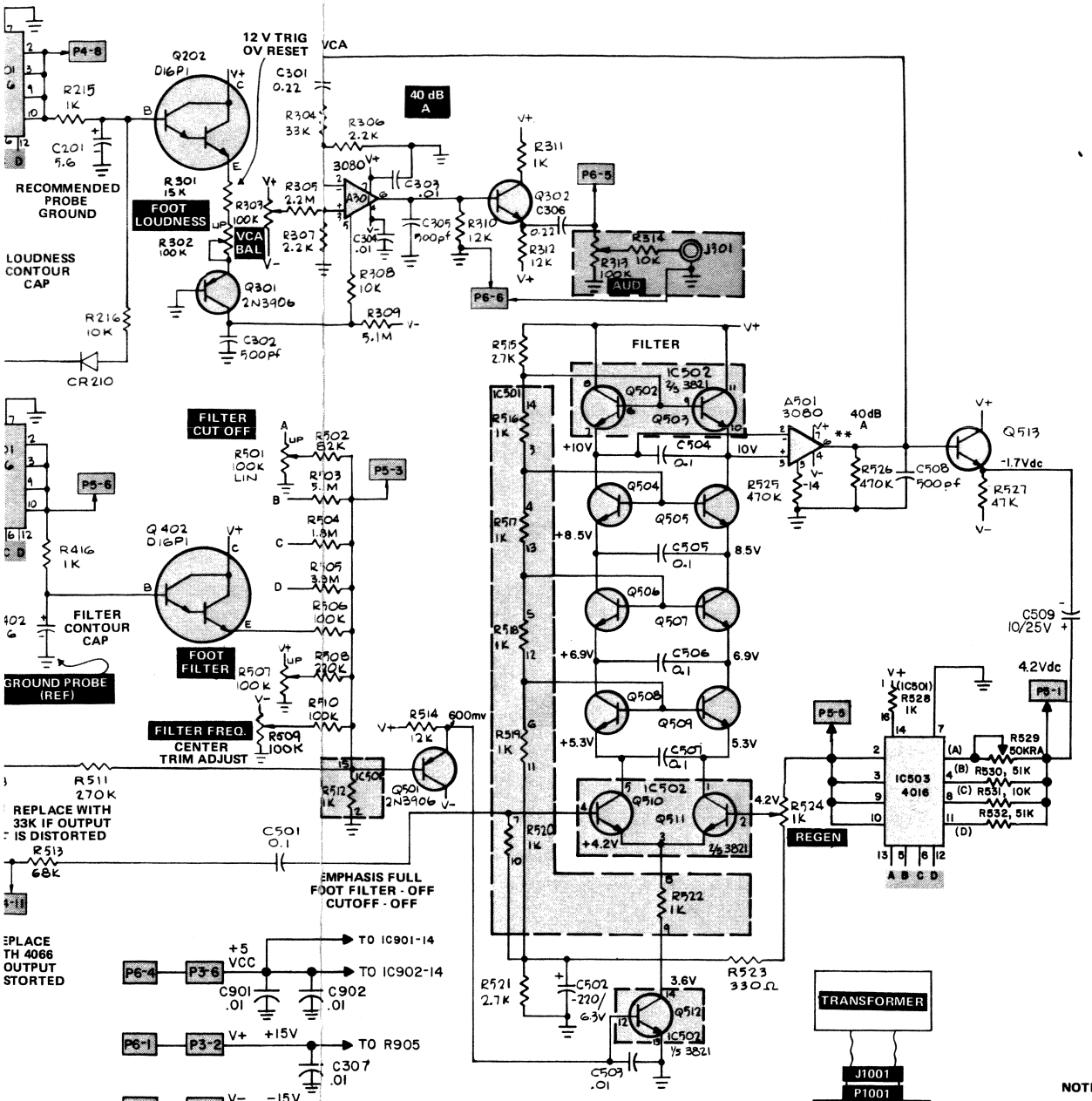

NOTES:

UNLESS OTHERWISE SPECIFIED –

1. ALL RESISTOR VALUES ARE IN OHMS AND 1/4 WATT.
2. ALL CAPACITOR VALUES ARE IN MFD.
3. ALL TRANSISTORS NPN ARE 2N3392.
4. ALL LEDS ARE SSL-22.
5. ALL DIODES ARE IN4148.
6. IC 601, 701, 801 SOCKETS SHOULD BE REPLACED WITH DUAL IN-LINE SOCKETS TO ELIMINATE LEAKAGE PROBLEMS.
7. TO ELIMINATE PITCH DRIFT FLOAT PIN 10 OF IC106, PIN 3 OF Q101 AND + SIDE OF C112.
8. * NOT ON BOARD.
9. ** REPLACE STANDARD 3080'S WITH 3080A FOR IMPROVED EFFECT CHARACTERISTICS ON OLDER MODELS.
10. 20% BLACK ▭ ARE CONNECTORS. 20% BLUE ▭ ARE INTEGRATED CIRCUITS AND TRANSISTORS.

MUSIC INC. BUFFALO, N.Y.
MODEL 205A 993-042109-001

FIGURE 7-4 OVERALL SCHEMATIC DIAGRAM

SCHEMATIC REPEATED ON REVERSE SIDE FOR SERVICE CONVENIENCE.

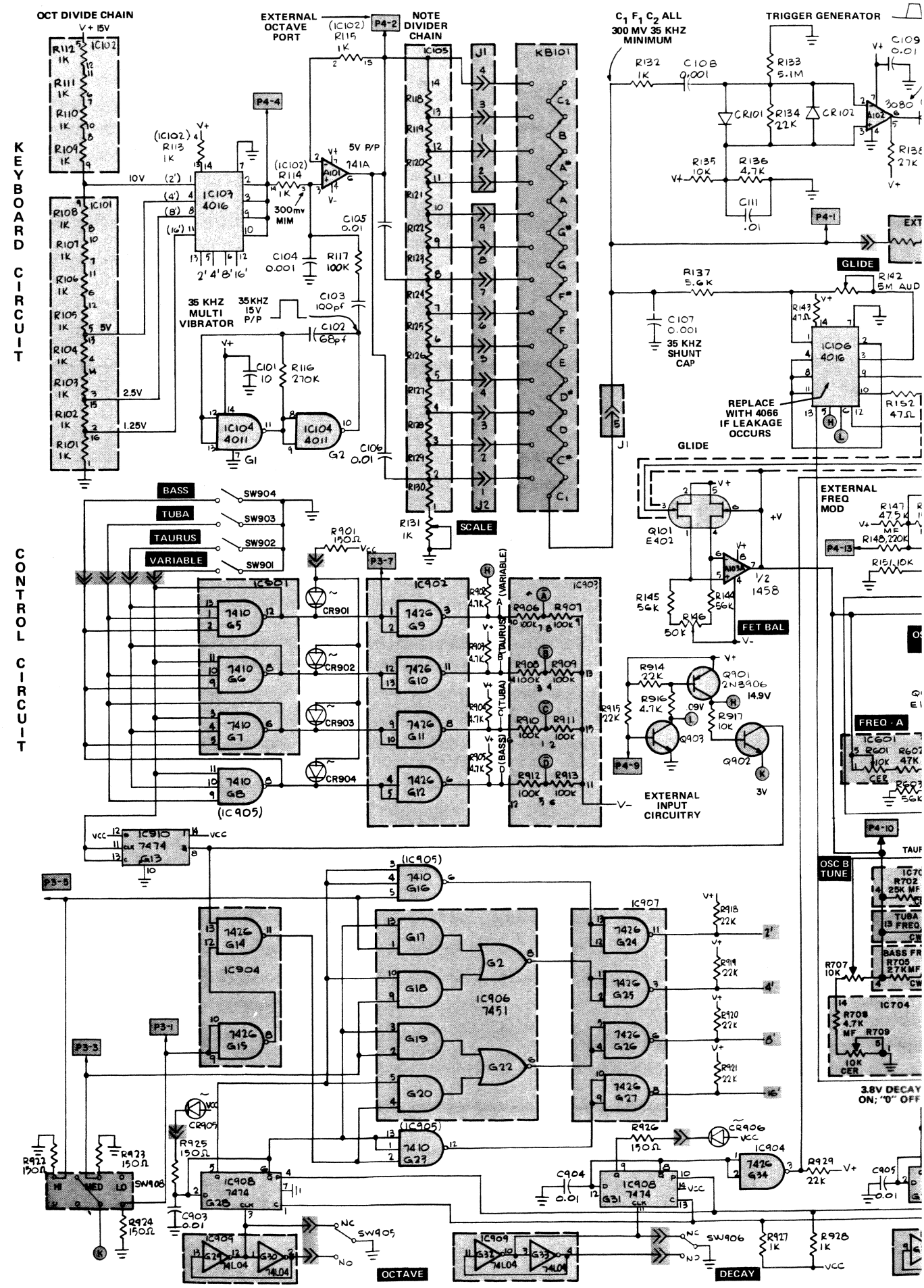
KEYBOARD CIRCUIT
CONTROL CIRCUIT
OCT DIVIDE CHAIN
EXTERNAL OCTAVE PORT
NOTE DIVIDER CHAIN
C1 F1 C2 ALL 300 MV 35 KHZ MINIMUM
TRIGGER GENERATOR
35 KHZ MULTI VIBRATOR
35KHZ 15V P/P
5V P/P
300mv MIM
GLIDE
35 KHZ SHUNT CAP
REPLACE WITH 4066 IF LEAKAGE OCCURS
SCALE
BASS
TUBA
TAURUS
VARIABLE
FET BAL
EXTERNAL FREQ MOD
EXTERNAL INPUT CIRCUITRY
OSC B TUNE
3.8V DECAY ON; "0" OFF
OCTAVE
DECAY