SERVICE MANUAL

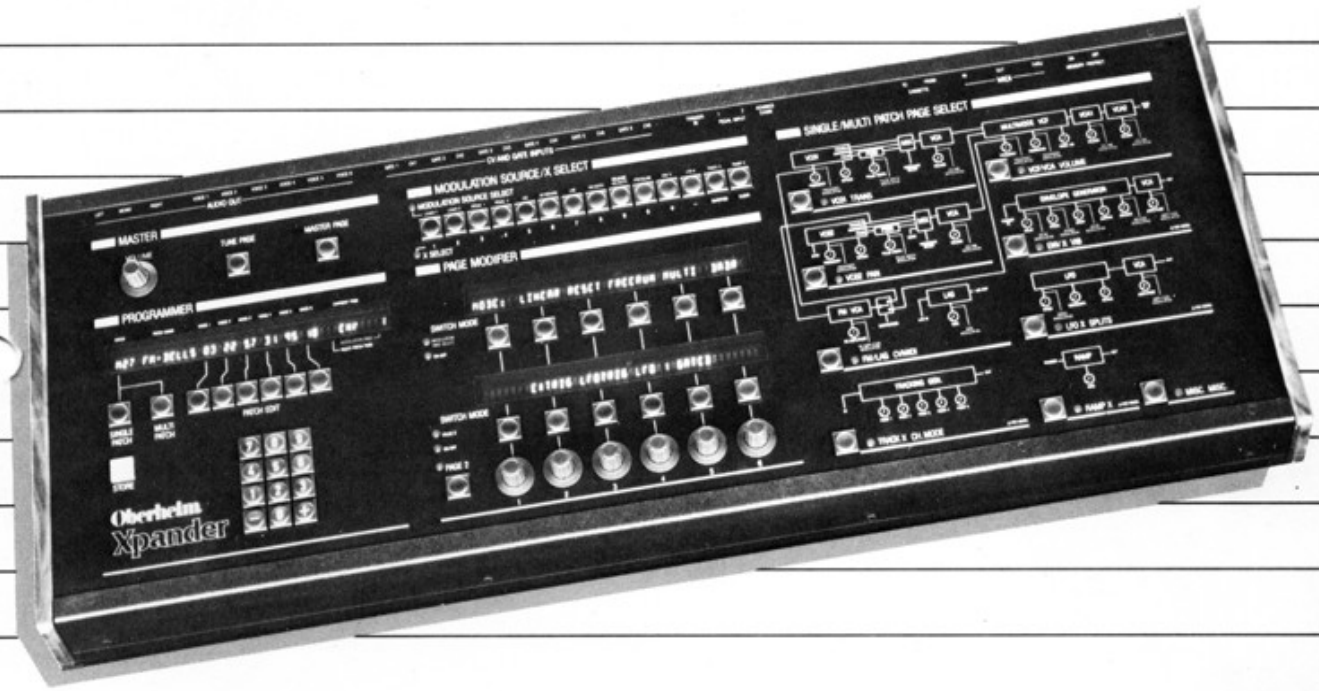

Oberheim
Xpander

Xpander
service manual

First edition
July 1984

By Michel DOIDIC

Oberheim part number 950037

OBERHEIM ELECTRONICS, INC.
2250 South Barrington Avenue, Los Angeles, California 90064

TABLE OF CONTENTS

Introduction ..... Page 2

Mechanical assembly ..... Page 3

Xpander circuitry overview ..... Page 4

Theory of operation
- Switching power supply ..... Page 6
- Dual microprocessor interface ..... Page 8
- Step encoder ..... Page 10
- Vacuum fluorescent displays ..... Page 12
- Gates and CVs in ..... Page 14
- VCO temperature compensation ..... Page 16
- High resolution DAC ..... Page 18
- VCO and VCF frequency tuning ..... Page 20
- Pulse width calibration ..... Page 20
- Filter resonance calibration ..... Page 21
- Dual VCO CEM 3374 ..... Page 22
- Signal processor CEM 3372 ..... Page 23
- Dynamic FM implementation ..... Page 24
- Multi function VCF ..... Page 26
- Smoothing sample and hold ..... Page 28
- Programmable panning ..... Page 30

Test and calibration ..... Page 32

Miscellaneous (software reset &version number, untune). Page 36

Schematics and parts layout ..... Page 39

Oberheim part number cross reference ..... Page 60

Engineering change orders ..... page 69

INTRODUCTION

The design philosophy behind the Xpander was to include all the features of a modular synthesizer in a programmable and easy to use instrument. At the same time, reliability, accuracy, and ease of servicing have been a prime concern through every step of the design. The result is the most complete and accurate analog polyphonic synthesizer ever built, despite the inclusion of 6 trimmers.

Besides the schematics and the calibration procedure, this manual includes basic explanations of some of the Xpander's circuits. We hope that despite their simplicity they will lead you to a better understanding of the Xpander and therefore to faster and easier servicing.

All of the Xpander general operation procedures are contain in the Xpander Owner's Manual.

When ordering spare parts from Oberheim Electronics, always indicate the **Oberheim part number** (see the Oberheim part number cross reference at page 60). This will speed up your order and avoid possible errors.

Warning: To avoid loss of data, save customer's data on tape prior to any technical servicing.

MECHANICAL ASSEMBLY

To access the inside of the Xpander you must:
-- Remove the 4 screws along the front of the unit.
-- Remove the top screw on the right and left wooden end-bells.
The whole front panel can now hinge back.

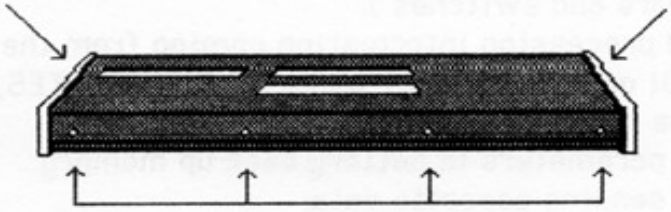

To access the vacuum fluorescent displays (alpha numeric displays), you must remove the three screws along the top of the display board. The display board can now hinge down.

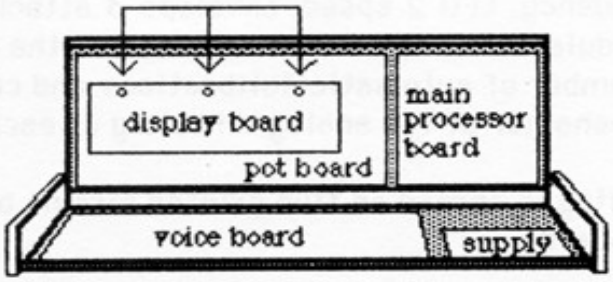

XPANDER CIRCUITRY OVERVIEW

The key to the outstanding performance and features of the Xpander is the intensive use made of its two built-in microprocessors.

The first microprocessor is called the main processor and is located on the processor board. Its main tasks are :

-- Collecting and processing information coming from the front panel controllers (encoders and switches).

-- Collecting and processing information coming from the outside of the Xpander through MIDI or control input jacks (CVs and GATES, PEDAL etc.).

-- Controlling the displays (alpha numeric and LEDs).

-- Storing sound parameters in battery back up memory.

-- Receiving and sending cassette data.

-- Controlling the sound parameters of the voices.

The second microprocessor, called the voice processor, is located on the voice printed circuit board.

The voice processor receives the sound parameter data from the main processor (VCO frequency, LFO 2 speed, envelope 3 attack time etc..) and generates all the modulations and controls that drive the analog circuitry. It also performs a number of automatic calibrations and corrections which insure the accurate behavior of the analog circuitry of each voice.

The Xpander's circuitry is spread on five printed circuit boards:

-- The processor board

-- The pot board

-- The display board

-- The voice board

-- The power supply board

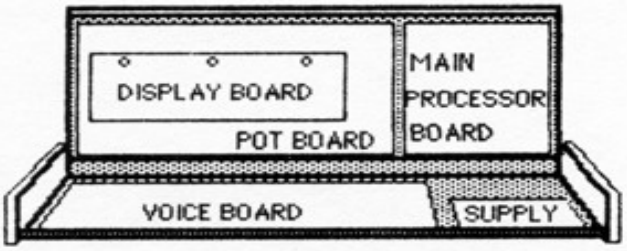

THE PROCESSOR BOARD:

The processor board is located in the upper right corner (when the unit is open). It holds :

--The 16 MHZ clock.
--The main processor.
--The power up/down detection circuit (PUP).
--The battery back up memory for the program retention as well as the battery itself.
--The MIDI in and out circuitry.
--The cassette in and out circuitry.
--Some of the LED latches.
--The analog noise generator.

THE POT BOARD:

The pot board is located in the upper left. It holds:

--The switch decoding circuit.
--The external CVs and gates circuit.
--The pedal circuit.
--The step encoder decoding circuit.
--Some of the LED latches.
--The audio master volume control.

THE DISPLAY BOARD:

The display board is located on top of the pot board. It holds:

--The decoding for the display's digits.
--The high voltage buffer for the diplays.
--The three 40-digit vacuum fluorescent display tubes.

THE VOICE BOARD:

The voice board is located on the bottom left. It holds:

--The processor interface circuit.
--The voice processor and its ROM and RAM.
--The DAC.
--The analog circuitry for the 6 voices.
--The panning circuit.

THE POWER SUPPLY:

The power supply is located on the bottom right.

THEORY OF OPERATION:

The following chapter provides information only on the parts of the Xpander's circuitry which present some originality and innovation. A basic knowledge of synthesizer electronic circuits is required.

SWITCHING POWER SUPPLY:

In order to decrease the heat dissipation without using bulky heat sinks, the Xpander uses a switching power supply which operates as follows:

The line AC voltage is first stepped down, rectified and filtered by T1, D1, D2 and C3 to produce a low DC voltage (approximately 13 volts). This DC voltage is then chopped (switched) by Q1 at a frequency of approximately 30 KHz to produce a variable pulse width wave. This pulse is applied through the primary of the step transformer T2 which provides in return on its secondary windings all the different voltages used in the Xpander. Those AC voltages (30 KHz frequency) are then rectified (D5,D4,D6,D7), filtered (C7,C5,C8,C9,C1,C10) and if necessary, regulated (U2,U1,U3). Finally, the 5 volt supply is fed back into the "oscillator/pulse width modulator" integrated circuit U4 to modulate the pulse width and provide the basic voltage regulation.

The advantage of this method over the conventional voltage regulation scheme lies in the fact that the regulation is achieved by modulating the width of a pulse wave rather than the resistance of a transistor. The modulated pulse turns on and off the power MOS transistor Q1 which will therefore always be in one of the two following states:

ON : voltage across =0 , drain current = max ---> power=0
OFF: voltage across =max , drain current = 0 ---> power=0

As there is no power across the transistor in both states, there is no heat production.

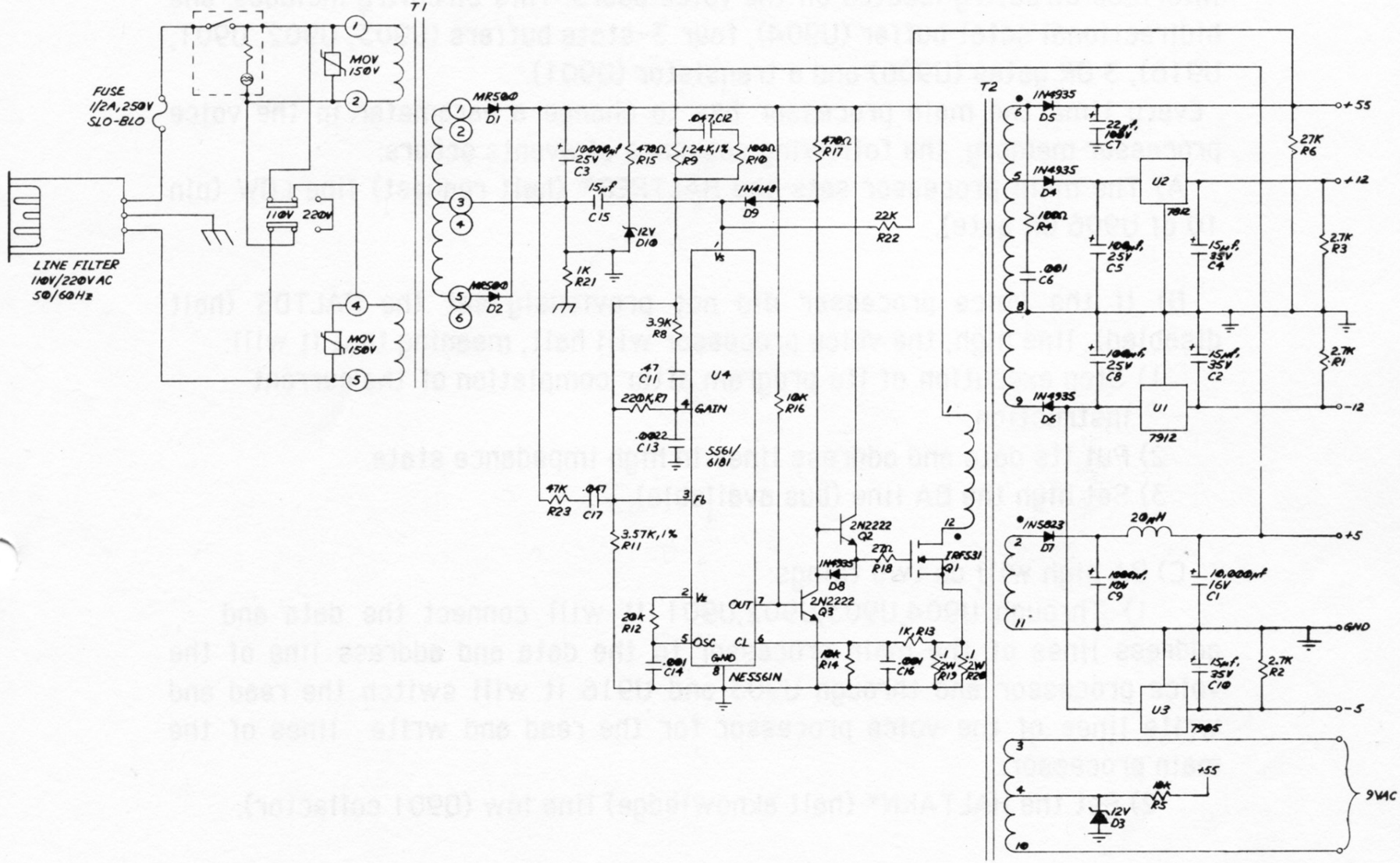
T1
FUSE
1/2A, 250V
SLO-BLO
LINE FILTER
110V/220V AC
50/60Hz
MOV
150V
110V
220V
MR500
D1
D2
10000µf
25V
C3
470Ω
R15
.047, C12
1.24K, 1%
R9
100Ω
R10
470Ω
R17
15µf
C15
12V
D10
1N4148
D9
22K
R22
1K
R21
3.9K
R8
.47
C11
220K, R7
.0022
C13
U4
GAIN
5561/
6181
Vs
Fb
Vz
OUT
OSC
CL
GND
NE5561N
47K
R23
.047
C17
3.57K, 1%
R11
20K
R12
.001
C14
10K
R16
2N2222
Q2
27Ω
R18
1N4935
D8
2N2222
Q3
IRF531
Q1
1K, R13
10K
R14
.001
C16
.1
2W
R19
.1
2W
R20
T2
1N4935
D5
22µf,
100V
C7
27K
R6
+55
1N4935
D4
U2
7812
+12
100Ω
R4
100µf,
25V
C5
15µf,
35V
C4
2.7K
R3
.001
C6
100µf,
25V
C8
15µf,
35V
C2
2.7K
R1
1N4935
D6
U1
7912
-12
1N5823
D7
20µH
+5
1000µf,
10V
C9
10,000µf
16V
C1
GND
15µf,
35V
C10
2.7K
R2
U3
7905
-5
+55
10K
R5
12V
D3
9VAC

DUAL MICROPROCESSOR INTERFACE:

The two microprocessors of the Xpander are running two different programs in parallel; the main processor is mainly in charge of collecting and processing the information of the front panel, and the voice processor generates the envelopes, LFOs, LAG etc. for the 6 voices. At,some point it is necessary for the main processor to write a new sound parameter into the voice processor memory (for example, a new speed value for an LFO or a new note value for a voice). This is done through the microprocessor interface circuitry located on the voice board. This circuitry includes: one bidirectional octal buffer (U904), four 3-state buffers (U903, U902, U901, U916), 3 OR gates (U906) and a transistor (Q901).

Every time the main processor has to change a parameter in the voice processor memory, the following sequence of events occurs:

A) The main processor sets the HALTREQ* (halt request) line LOW (pin 10 of U906 OR gate).

B) If the voice processor did not previously set the HALTDS (halt disabled) line high, the voice processor will halt, meaning that it will:

1) Stop execution of its program after completion of the current instruction.
2) Put its data and address lines in high impedance state.
3) Set high the BA line (bus available).

C) BA high will do two things:

1) Through U904,U903,U902,U901 it will connect the data and address lines of the main processor to the data and address line of the voice processor and through U903 and U916 it will switch the read and write lines of the voice processor for the read and write lines of the main processor.
2) Set the HALTAKN* (halt aknowledge) line low (Q901 collector).

D) By sensing the HALTAKN* line low, the main processor knows that its data and address lines are now connected to the voice processor memory and that it can therefore read from or write into it.

E) When the data transfer is completed, the main processor sets the HALTREQ* line high again, allowing the voice processor to retrieve control of its bus and resume its operation.

NOTE: If during normal operation (no tuning or cassette transfer) the voice processor does not aknowledge a halt request in less than 1 second, the main processor will sense a malfunction and will display: "VOICE PROCESSOR MALFUNCTION".

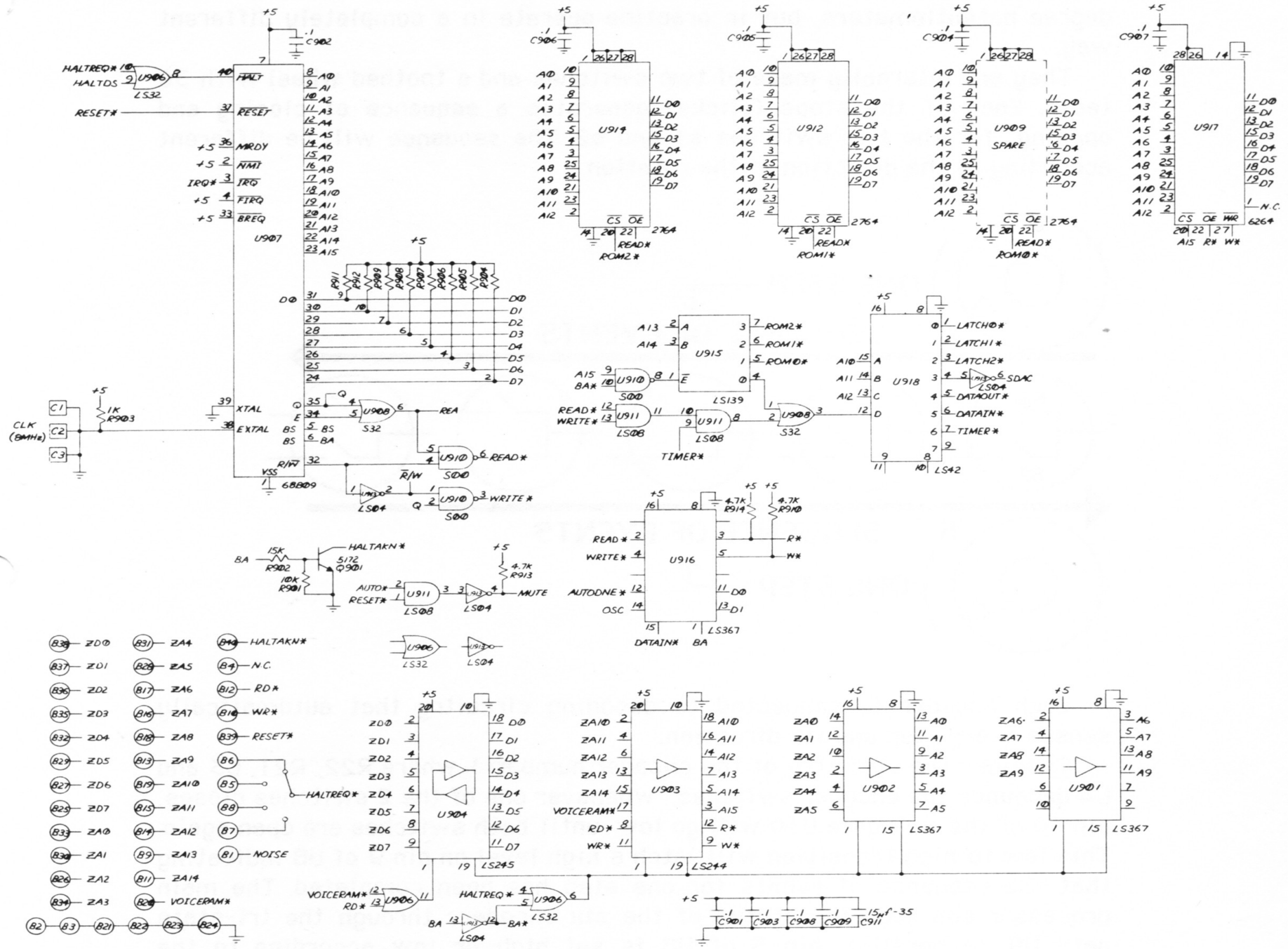
U907
6BB09
U914
2764
U912
2764
U909
SPARE
2764
U917
6264
U915
LS139
U918
LS42
U916
LS367
U904
LS245
U903
LS244
U902
LS367
U901
LS367
U906
LS32
U908
S32
U910
S00
U911
LS08
U913
LS04
HALTREQ*
HALTDS
RESET*
IRQ*
CLK
(8MHz)
HALTAKN*
AUTO*
RESET*
MUTE
READ*
WRITE*
AUTODNE*
OSC
DATAIN*
LATCH0*
LATCH1*
LATCH2*
SDAC
DATAOUT*
DATAIN*
TIMER*
VOICERAM*
RD*
WR*
NOISE
N.C.
ROM2*
ROM1*
ROM0*
REA
15μf-35

STEP ENCODERS:

In order to facilitate parameter edition, the Xpander uses six step encoders located at the bottom of the PAGE MODIFIER section.

Step encoders, from the outside, seem to behave and look like 360 degree potentiometers, but in practice operate in a completely different way.

They are internally made of two switches and a toothed wheel with 30 teeth. Each of the steps (clicks) generates a sequence of closing and opening for the two switches s1 and s2. The sequence will be different according to the direction of the rotation.

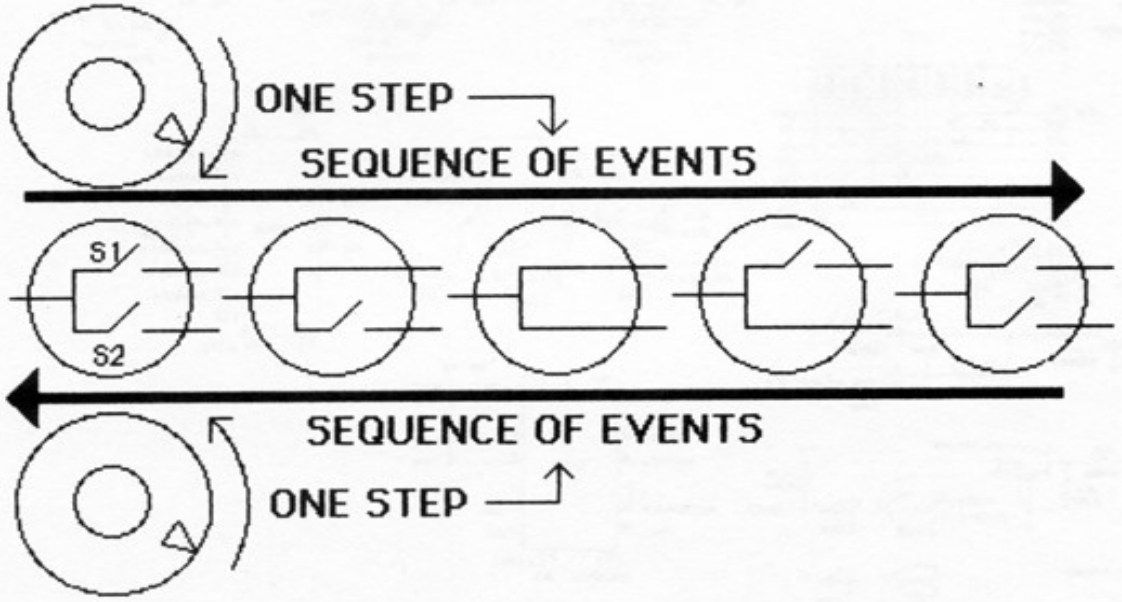

Each encoder is connected to decoding circuitry that automatically senses every step and its direction.

Consider the circuitry of the encoder number 1 where R22, R21, C3 and C4 debounce the encoder switches. Whenever one of the 2 switches closes, pin 10 of the NOR gate U10 will go low until both switches are open again. This low to high transition will latch a high level on pin 9 of U8 indicating that the sequence of events for one step has been completed. The main processor can read the status of the six encoders through the tri-state gate U9. In parallel, pin 5 of U8 is set high or low according to the direction of the rotation of the encoder. The main processor can read the direction through the tri-state gate U5. Note that when U5 is enabled (DIR* is low) all the step sensor latches are reset.

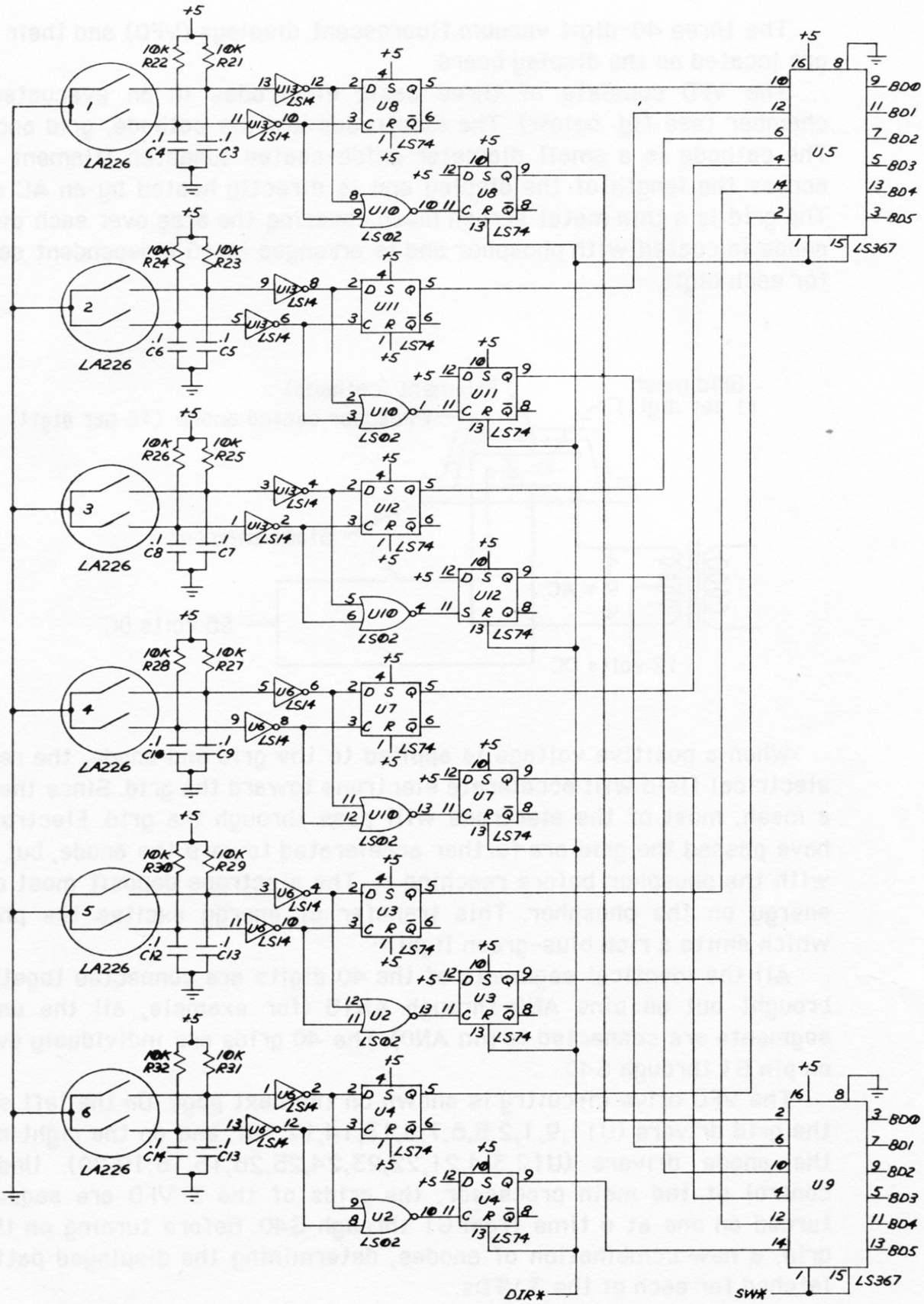
+5
10K R22
10K R21
1
LA226
.1 C4
.1 C3
U13 LS14
U8
D S Q
C R Q
LS74
U10 LS02
10K R24
10K R23
2
.1 C6
.1 C5
U11
10K R26
10K R25
3
.1 C8
.1 C7
U12
10K R28
10K R27
4
.1 C10
.1 C9
U6 LS14
U7
10K R30
10K R29
5
.1 C12
.1 C13
U3
U2 LS02
10K R32
10K R31
6
.1 C14
.1 C13
U4
U5
U9
LS367
BD0
BD1
BD2
BD3
BD4
BD5
DIR*
SW*

VACUUM FLUORESCENT DISPLAYS:

The three 40-digit vacuum fluorescent displays (VFD) and their drivers are located on the display board.

The VFD consists of three basic electrodes in an evacuated glass chamber (see fig. below). The electrodes are the cathode, grid and anode. The cathode is a small diameter oxide-coated tungsten filament running across the length of the display and is directly heated by an AC current. The grid is a thin metal screen mesh covering the area over each digit. The anode is coated with phosphor and is arranged in 16 independent segments for each digit.

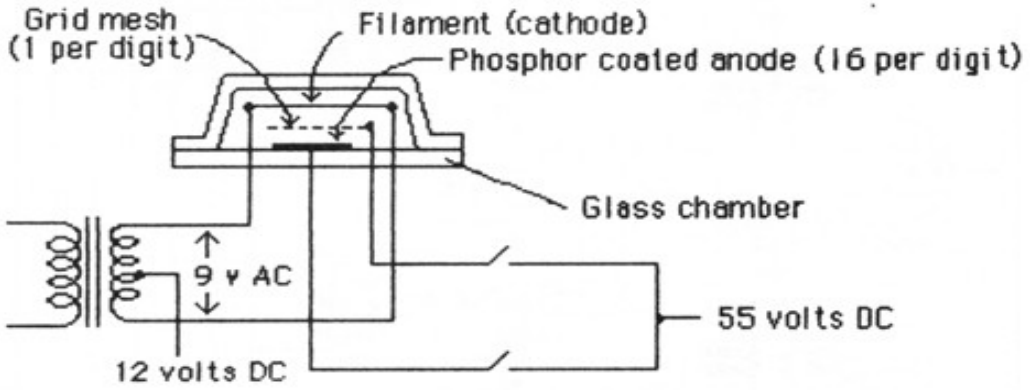

When a positive voltage is applied to the grid and anode, the resultant electrical field will accelerate electrons toward the grid. Since the grid is a mesh, most of the electrons will pass through the grid. Electrons that have passed the grid are further accelerated toward the anode, but collide with the phosphor before reaching it. The electrons deposit most of their energy on the phosphor. This transfer of energy excites the phosphor, which emits a rich blue-green light.

All the identical segments of the 40 digits are connected together and brought out on pins AN0 through AN15 (for example, all the underline segments are connected to pin AN0). The 40 grids are individualy available on pin G1 through G40.

The VFD drive circuitry is shown on the next page. On the left side are the grid drivers (U11,9,1,2,5,6,7,8,13,14,17,18), and on the right side are the anode drivers (U12,3,4,21,22,23,24,25,26,15,16,19,20). Under the control of the main processor, the grids of the 3 VFD are sequentially turned on one at a time from G1 through G40. Before turning on the next grid, a new combination of anodes, determining the displayed pattern, is latched for each of the 3 VFDs.

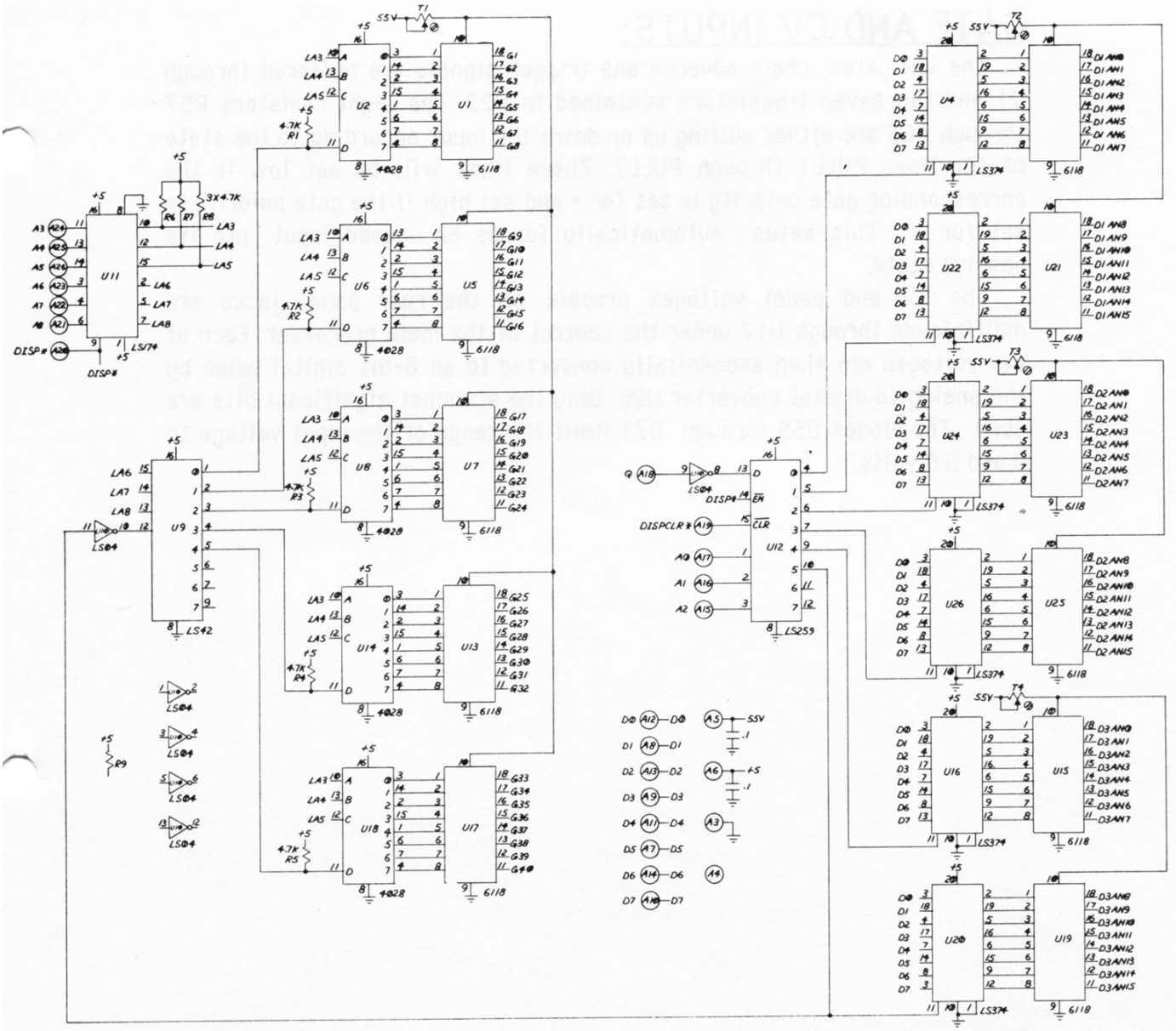

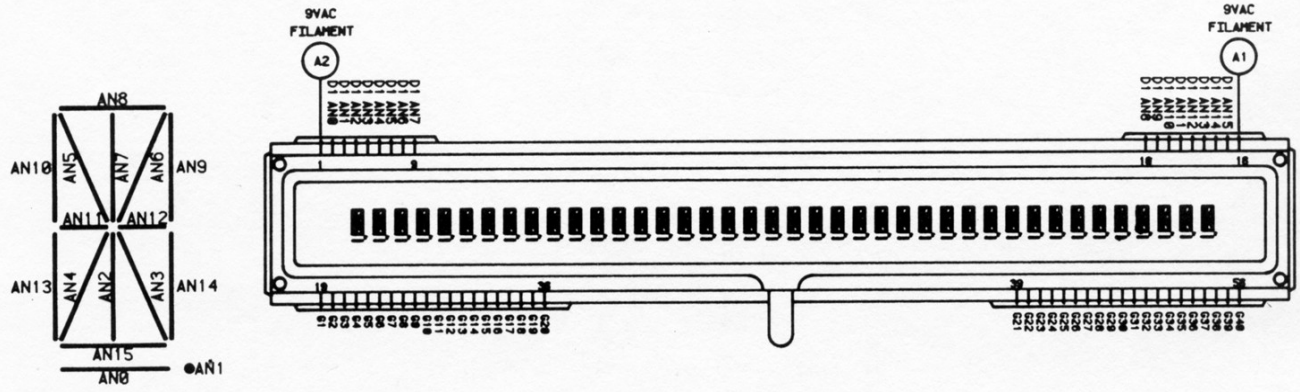
9VAC
FILAMENT
A2
9VAC
FILAMENT
A1
AN8
AN10
AN5
AN7
AN6
AN9
AN11
AN12
AN13
AN4
AN2
AN3
AN14
AN15
AN0
AN1

GATE AND CV INPUTS:

The six gates, chain advance and trigger signals are buffered through Q1 and the seven transistors contained in U22. The eight resistors R57 through R63 are either pulling up or down the input according to the state of the lines PULL1 through PULL7. These lines will be set low if the corresponding gate polarity is set for + and set high if the gate polarity is set for - . This setup automatically forces an unused input into its passive state.

The CV and pedal voltages present on the rear panel jacks are multiplexed through U17 under the control of the main processor. Each of the voltages are then sequentially converted to an 8-bit digital value by the analog to digital converter U20. Only the six most significant bits are used. The diodes D55 through D71 limit the range of the input voltage to 0 and 5.6 volts.

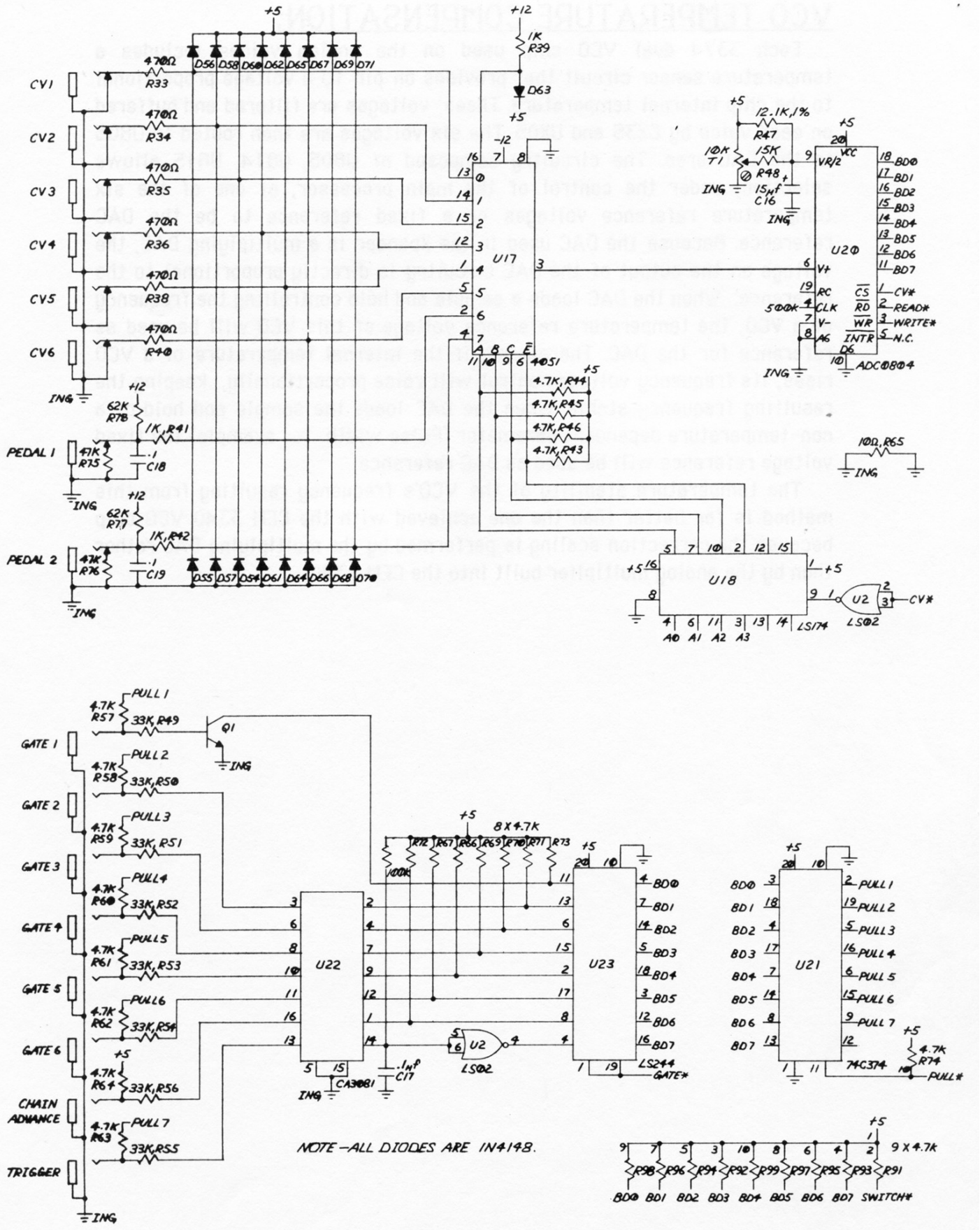
CV1
CV2
CV3
CV4
CV5
CV6
PEDAL 1
PEDAL 2
ING
+5
+12
-12
470Ω R33
470Ω R34
470Ω R35
470Ω R36
470Ω R38
470Ω R40
D56 D58 D60 D62 D65 D67 D69 D71
D55 D57 D54 D61 D64 D66 D68 D70
1K R39
D63
U17
4051
4.7K, R44
4.7K, R45
4.7K, R46
4.7K, R43
62K R78
1K, R41
47K R75
.1 C18
62K R77
1K, R42
47K R76
.1 C19
12.1K, 1% R47
10K T1
15K R48
15µf C16
U20
ADC0804
500K
CV*
READ*
WRITE*
N.C.
10Ω, R65
U18
LS174
A0 A1 A2 A3
U2
LS02
GATE 1
GATE 2
GATE 3
GATE 4
GATE 5
GATE 6
CHAIN ADVANCE
TRIGGER
PULL 1
PULL 2
PULL 3
PULL 4
PULL 5
PULL 6
PULL 7
4.7K R57
33K, R49
Q1
4.7K R58
33K, R50
4.7K R59
33K, R51
4.7K R60
33K, R52
4.7K R61
33K, R53
4.7K R62
33K, R54
4.7K R64
33K, R56
4.7K R63
33K, R55
8 X 4.7K
100K
U22
CA3081
.1µf C17
U23
LS244
GATE*
U21
74C374
4.7K R74
PULL*
9 X 4.7K
R98 R96 R94 R92 R99 R97 R95 R93 R91
BD0 BD1 BD2 BD3 BD4 BD5 BD6 BD7 SWITCH*
NOTE—ALL DIODES ARE 1N4148.

VCO TEMPERATURE COMPENSATION:

Each 3374 dual VCO chip used on the analog voices includes a temperature sensor circuit that provides on pin 10 a voltage proportional to the chip internal temperature. These voltages are filtered and buffered on each voice by CX35 and UX05. The six voltages are then routed to U805 in the DAC area. The circuitry composed of U805, U814, U815 allows selection, under the control of the main processor, of one of the six temperature reference voltages or a fixed reference to be the DAC reference. Because the DAC used in the Xpander is a multiplying DAC, the voltage on the output of the DAC circuitry is directly proportional to the reference. When the DAC loads a sample and hold controlling the frequency of a VCO, the temperature reference voltage of this VCO will be used as reference for the DAC. Therefore , if the internal temperature of a VCO rises, its frequency voltage control will raise proportionally, keeping the resulting frequency stable. When the DAC loads the sample and hold of a non-temperature dependant parameter (Pulse width for example) the fixed voltage reference will be used as DAC reference.

The temperature stability of the VCO's frequency resulting from this method is far better than the one achieved with the CEM 3340 VCO chip because the correction scaling is performed by the multiplying DAC rather than by the analog multiplier built into the CEM 3340.

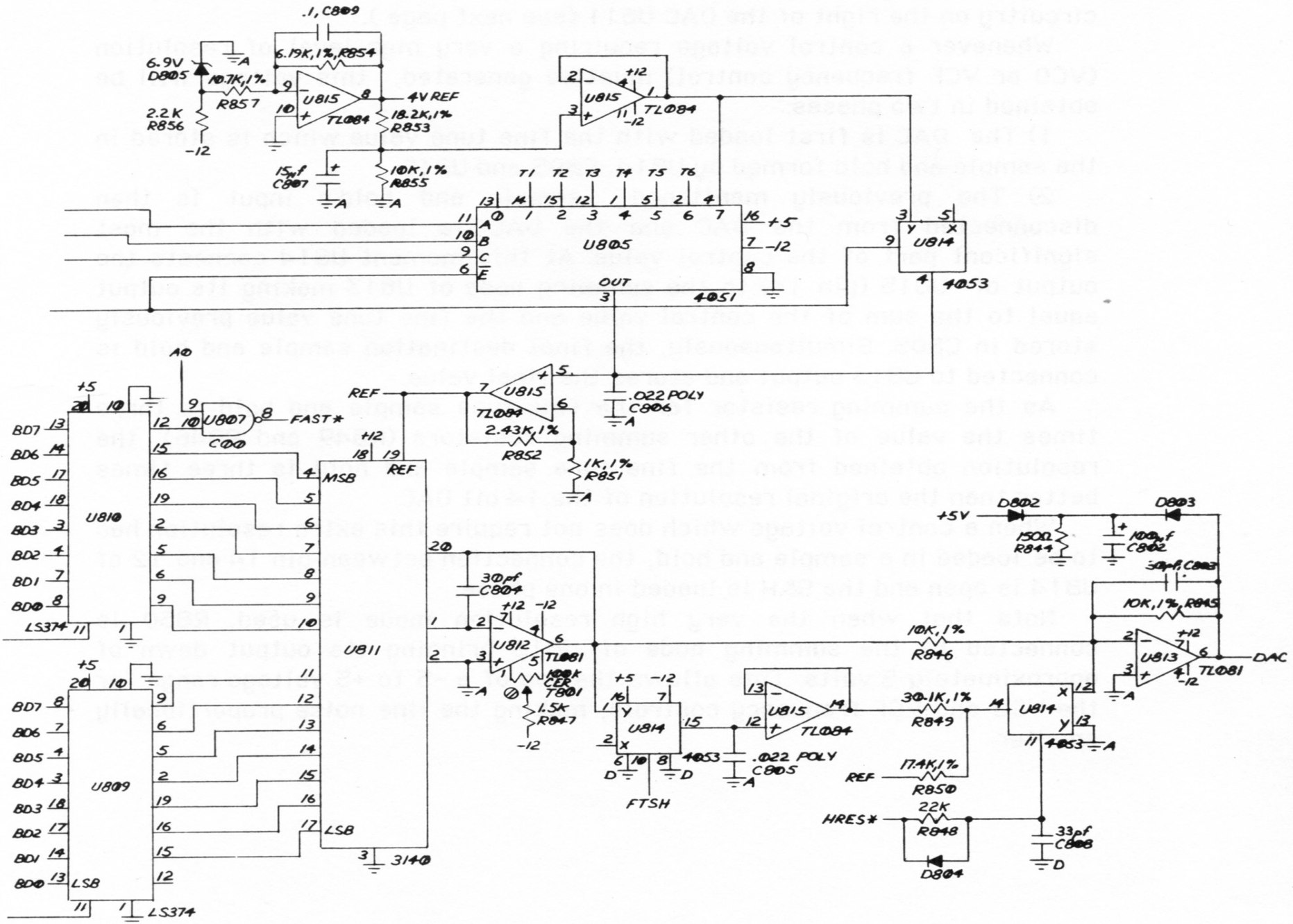
.1, C809
6.19K,1%,R854
6.9V
D805
10.7K,1%
R857
2.2K
R856
-12
U815
TL084
4V REF
18.2K,1%
R853
15µf
C807
10K,1%
R855
U815
TL084
+12
-12
T1 T2 T3 T4 T5 T6
U805
4051
+5
-12
OUT
U814
4053
A0
U807
C00
FAST*
REF
U815
TL084
2.43K,1%
R852
1K,1%
R851
.022 POLY
C806
U810
LS374
BD7
BD6
BD5
BD4
BD3
BD2
BD1
BD0
U811
MSB
LSB
3140
30pf
C804
U812
TL081
100K
CER
T801
1.5K
R847
U809
LS374
U814
4053
FTSH
.022 POLY
C805
U815
TL084
30.1K,1%
R849
17.4K,1%
R850
22K
R848
D804
HRES*
33pf
C808
U814
4053
10K,1%
R846
+5V
D802
D803
150Ω
R844
100µf
C802
30pf,C803
10K,1%,R845
U813
TL081
DAC

HIGH RESOLUTION DAC:

The Xpander uses a 14 bit DAC which provides the high resolution needed for the generation of smooth and accurate modulations. However an even higher resolution is required to achieve the very high standard of tuning accuracy that Oberheim likes to offer. This is accomplished by the circuitry on the right of the DAC U811 (see next page).

Whenever a control voltage requiring a very high level of resolution (VCO or VCF frequency control) must be generated, this voltage will be obtained in two phases:

1) The DAC is first loaded with the fine tune value which is stored in the sample and hold formed by U814, C805 and U815

2) The previously mentioned sample and hold's input is then disconnected from the DAC and the DAC is loaded with the most significant part of the control value. At this moment U814 connects the output of U815 (pin 14) to the summing node of U813 making its output equal to the sum of the control value and the fine tune value previously stored in C805. Simultaneously, the final destination sample and hold is connected to U813 output and stores the final value.

As the summing resistor for the fine tune sample and hold is three times the value of the other summing resistors (R849 and R846), the resolution obtained from the fine tune sample and hold is three times better than the original resolution of the 14 bit DAC.

When a control voltage which does not require this extra resolution has to be loaded in a sample and hold, the connection between pin 14 and 12 of U814 is open and the S&H is loaded in one phase.

Note that when the very high resolution mode is used, R850 is connected to the summing node of U813 bringing its output down of approximately 5 volts. This allows the use of a -5 to +5 voltage range for the VCO and VCF frequency controls, making the line noise proportionally smaller.

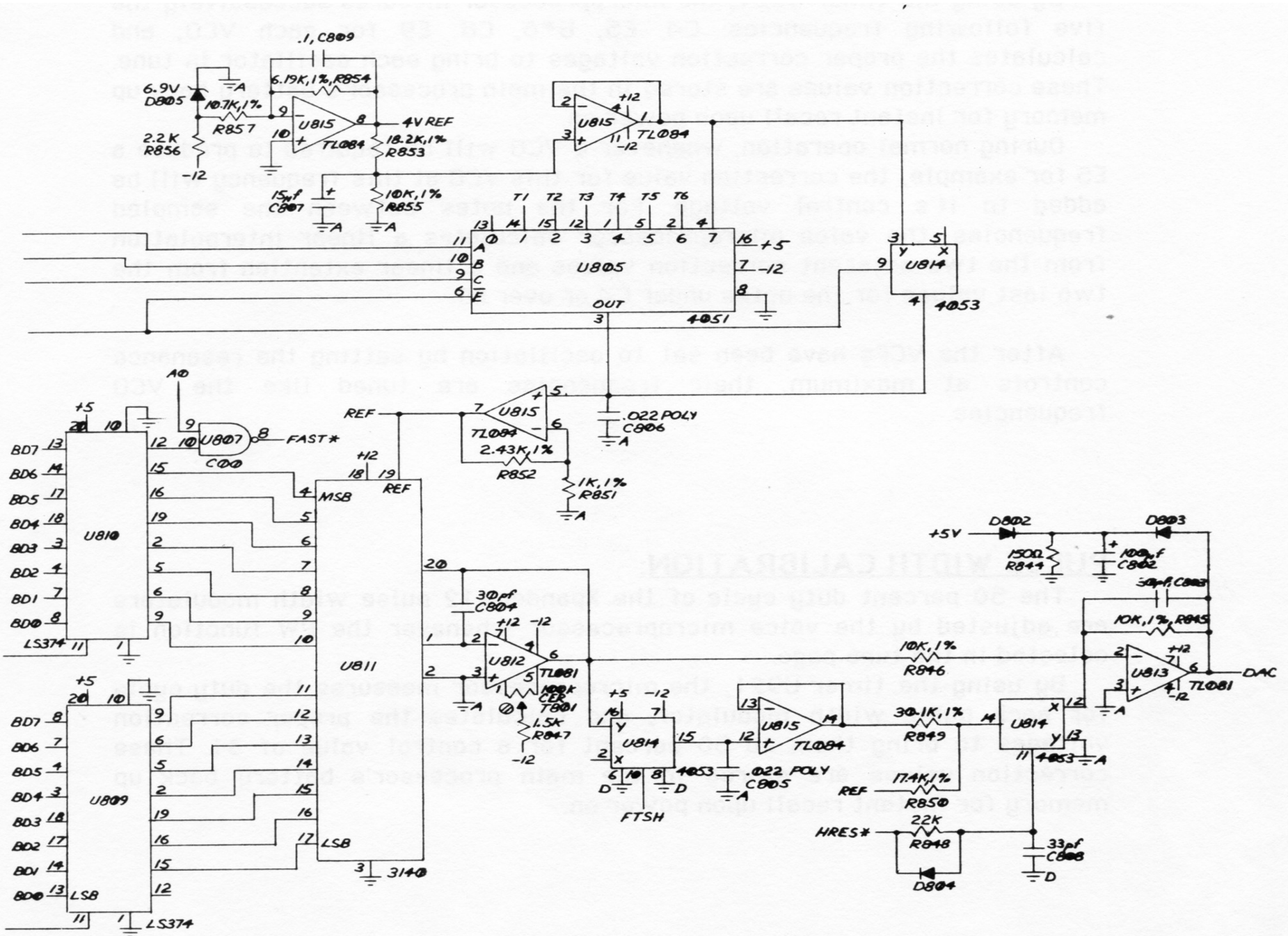
.1, C809
6.19K,1%,R854
6.9V
D805
10.7K,1%
R857
2.2K
R856
-12
U815
TL084
4V REF
18.2K,1%
R853
15µf
C807
10K,1%
R855
U815
TL084
+12
-12
T1 T2 T3 T4 T5 T6
U805
4051
OUT
+5
-12
U814
4053
A0
U807
C00
FAST*
REF
U815
TL084
2.43K,1%
R852
1K,1%
R851
.022 POLY
C806
BD7
BD6
BD5
BD4
BD3
BD2
BD1
BD0
U810
LS374
MSB
REF
U811
LSB
3140
30pf
C804
U812
TL081
100K
CER
T801
1.5K
R847
U809
LSB
LS374
U814
4053
FTSH
.022 POLY
C805
U815
TL084
10K,1%
R846
30.1K,1%
R849
17.4K,1%
R850
REF
HRES*
22K
R848
D804
33pf
C808
U814
4053
+5V
D802
D803
150Ω
R844
100µf
C802
30pf,C803
10K,1%,R845
U813
TL081
DAC

VCO AND VCF FREQUENCY TUNING:

The volts per octave (scaling) parameters of the Xpander's 12 VCOs are adjusted by the voice microprocessor whenever the VCO function is selected in the tune page.

By using the timer U921, the microprocessor mesures successively the five following frequencies: C4, E5, G#6, C8, E9 for each VCO, and calculates the proper correction voltages to bring each oscillator in tune. These correction values are stored in the main processor's battery back up memory for instant recall upon power on.

During normal operation, whenever a VCO will be required to produce a E5 for example, the correction value for this VCO at this frequency will be added to it's control voltage. For the notes between the sampled frequencies, the voice microprocessor calculates a linear interpolation from the two adjacent correction values and a linear extention from the two last values for the notes under C4 or over E9.

After the VCFs have been set to oscillation by setting the resonance controls at maximum, their frequencies are tuned like the VCO frequencies.

PULSE WIDTH CALIBRATION:

The 50 percent duty cycle of the Xpander's12 pulse width modulators are adjusted by the voice microprocessor whenever the PW function is selected in the tune page.

By using the timer U921, the microprocessor measures the duty cycle for each pulse width modulator, and calculates the proper correction voltages to bring them to 50 percent for a control value of 31. These correction values are stored in the main processor's battery back up memory for instant recall upon power on.

FILTER RESONANCE CALIBRATION: for voice software version 1.1

Every time the RES function is selected in the tune page, the voice microprocessor performs the following tests.

1. The software checks that the filter is oscillating when its frequency is set for E9, and its resonance control is at maximum (5 volts). This test insures that the VCF will be able to oscillate over the keyboard range.

2. The filter frequency is set for E5 and the resonance control is decreased until the filter stops oscillating.

3. The resonance is slowly increased until the filter starts oscillating again. The resonance value at this point is saved as the "oscillation break point".

During normal operation, the microprocessor scales the resonance control as shown on the figure below.

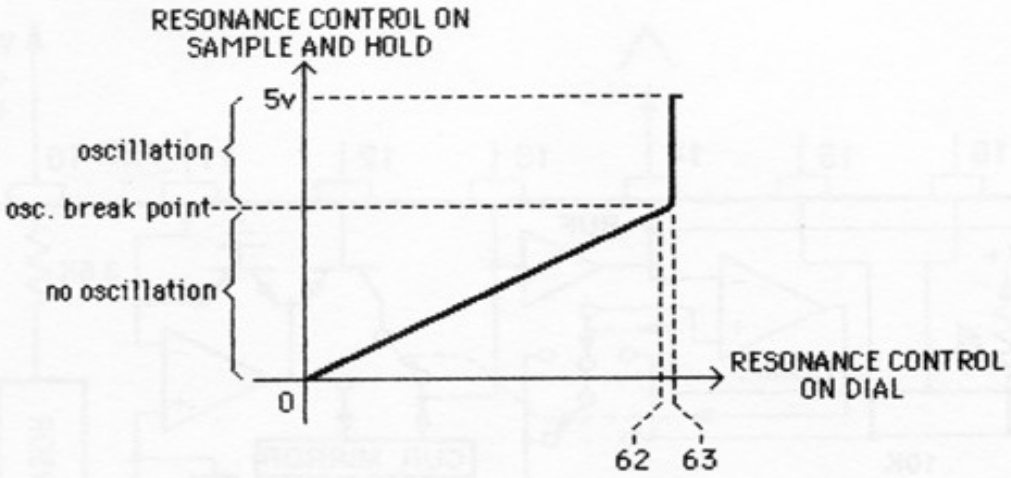

As the frequency ot the CEM 3372 changes slightly with its resonance setting, the VCF frequencies are automatically retuned after the resonance calibration has been performed.

DUAL VCO CEM 3374:

The CEM 3374 contains two completely independent precision voltage controlled oscillators. The 3374 includes an on-chip temperature sensor which generates an output voltage, nominally +2.5V, proportional to the chip temperature with a T.C. of +3300 ppm.

CEM 3374 BLOCK DIAGRAM:

Reproduced with permission of Curtis Electromusic Specialities

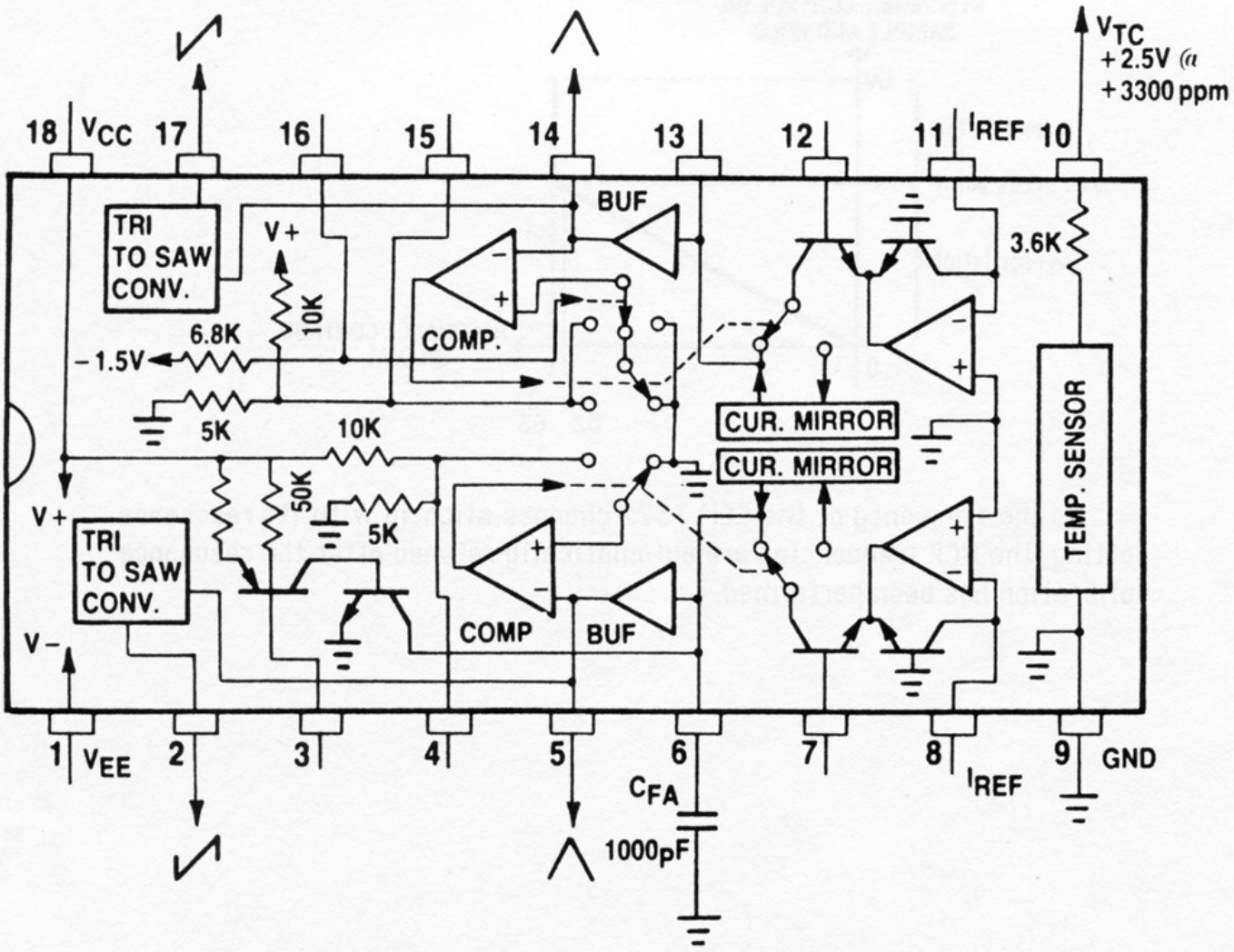

SIGNAL PROCESSOR CEM 3372:

The CEM 3372 is an audio signal processing device. It includes a two channel voltage controlled mixer, a dedicated 4-pole low pass VCF with voltage controlled resonance and a final VCA. With the exception of the filter cut-off frequency, all control inputs are very low bias current, high impedance which range from 0 to 5 volts.

CEM 3372 BLOCK DIAGRAM:

Reproduced with permission of Curtis Electromusic Specialities

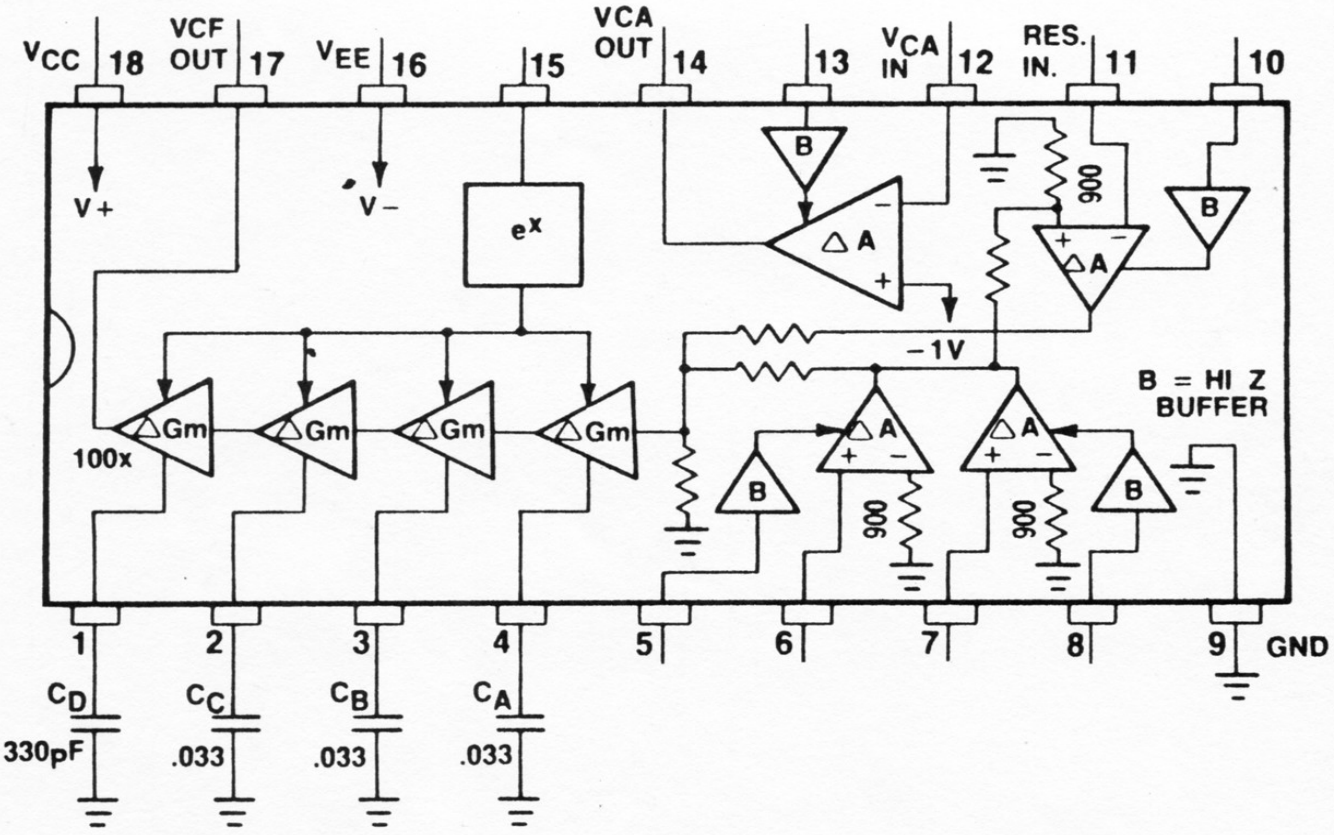

DYNAMIC FM IMPLEMENTATION:

The Xpander voice allows dynamic linear modulation of VCO1 frequency by VCO2 triangle output.

This is done by sending the triangle output of VCO2 (pin 5 of UX09) to the reference input of the multiplying DAC UX04 which has its combination inputs controlled by the latch UX03. The op amp UX05 converts the current output of the DAC into a voltage.

The three IC's mentioned above act as a digitally controlled variable gain amplifier where pin 15 of UX04 is the amplifier input, pin 1 of UX05 is the amplifier output and pin 4 through 11 of UX04 are the digital gain control inputs. The analog switch UX14 routes the modulation signal either to the linear frequency control input of VCO1 (pin 11 of UX09) or to the VCF frequency input (pin 15 of UX12).

This method is preferred over using a conventional VCA because of the much better temperature independancy and linearity of the multiplying DAC.

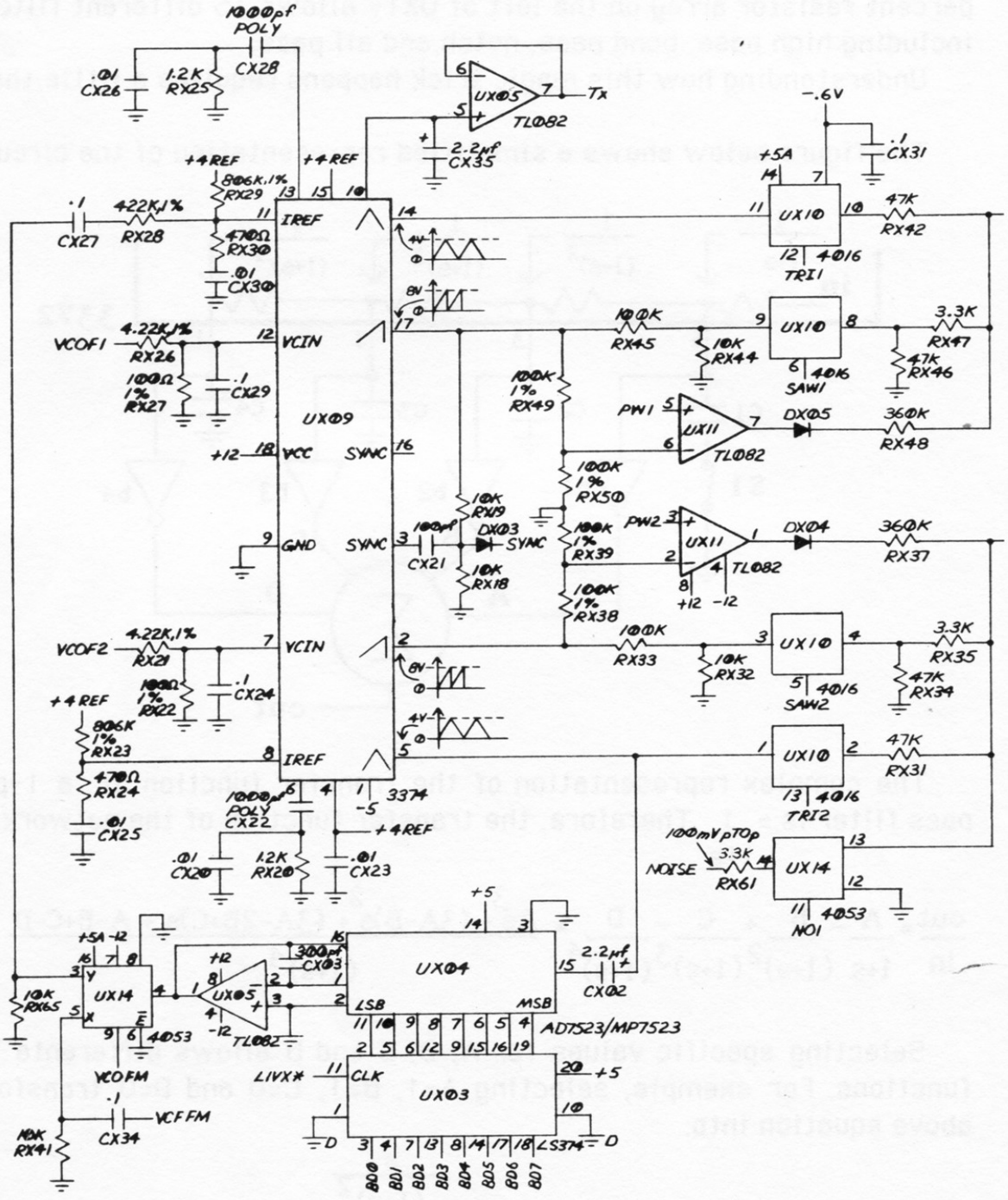
1000pf POLY
CX28
.01 CX26
1.2K RX25
UX05 TL082
Tx
2.2mf CX35
-.6V
.1 CX31
+4REF
806K,1% RX29
.1 CX27
422K,1% RX28
470Ω RX30
.01 CX30
IREF
+5A
UX10 4016 TRI1
47K RX42
4V
8V
VCOF1
4.22K,1% RX26
100Ω 1% RX27
.1 CX29
VCIN
UX09
100K RX45
10K RX44
UX10 4016 SAW1
3.3K RX47
47K RX46
100K 1% RX49
PW1
UX11 TL082
DX05
360K RX48
+12
VCC
SYNC
100K 1% RX50
10K RX19
100pf
DX03 SYNC
CX21
10K RX18
GND
100K 1% RX39
PW2
DX04
360K RX37
100K 1% RX38
+12 -12
VCOF2
4.22K,1% RX21
100Ω 1% RX22
.1 CX24
100K RX33
10K RX32
UX10 4016 SAW2
3.3K RX35
47K RX34
806K 1% RX23
470Ω RX24
.01 CX25
3374 -5
1000pf POLY CX22
.01 CX20
1.2K RX20
.01 CX23
47K RX31
UX10 4016 TRI2
100mVpTOp NOISE
3.3K RX61
UX14 4053 NOI
+5A -12
10K RX65
UX14
UX05 TL082
300pf CX03
UX04
2.2mf CX02
LSB
MSB
AD7523/MP7523
VCO FM
.1 CX34
VCF FM
10K RX41
LIVX*
CLK
UX03
LS374
BD0 BD1 BD2 BD3 BD4 BD5 BD6 BD7

MULTI FUNCTION VCF:

Although the VCF implemented in the 3372 is a standard 4-pole low pass, the additional circuitry made of UX14, UX13, UX15, UX17, and the one percent resistor array on the left of UX17 allows 15 different filter modes including high pass, band pass, notch and all pass.

Understanding how this magic trick happens requires a little theory.

The figure below shows a simplified representation of the circuitry.

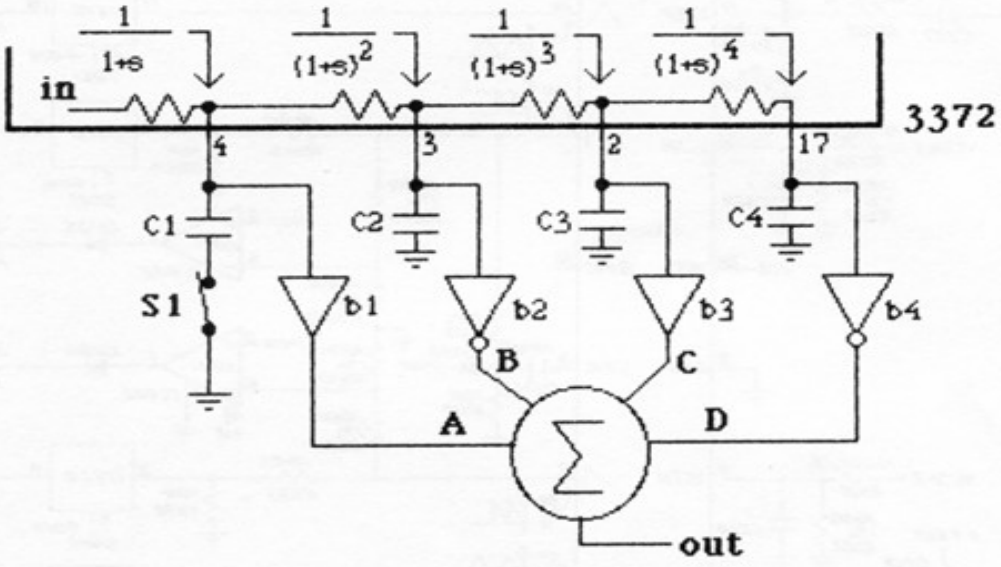

The complex representation of the transfer function of a 1-pole low pass filter is:= $\frac{1}{1+s}$ Therefore, the transfer function of the network will be:

$$\frac{out}{in} = \frac{A}{1+s} - \frac{B}{(1+s)^2} + \frac{C}{(1+s)^3} - \frac{D}{(1+s)^4} = \frac{As^3 + (3A-B)s^2 + (3A-2B+C)s + A-B+C-D}{(1+s)^4}$$

Selecting specific values for A, B, C and D allows differente transfer functions. For exemple, selecting A=1, B=1, C=0 and D=0 transforms the above equation into:

$$\frac{s}{(1+s)^2}$$

which is the transfer function of a 2 pole band pass filter.

Getting different responses from this network will be just a matter of adjusting the coefficients A, B, C and D in order to transform the transfer function into the desired one.

For the high pass and all pass filter modes, it is necessary to cancel the first cell of the filter. This is accomplished by opening the switch S1.

In practice, S1 is implemented by one cell of the analog switch UX15, the buffers b1, b2 and b3 are the four op amps of UX13, b4 is the op amp UX15 (output pin 7) and the summation is performed by the second cell of UX15 (output on pin 1). The coefficients A, B, C and D are set by the value of the summing resistors. The analog multiplexer UX17 allows to select from eight different resistor combinations providing eight different filter modes. Seven additional modes are obtained by selecting the previous modes and opening S1.

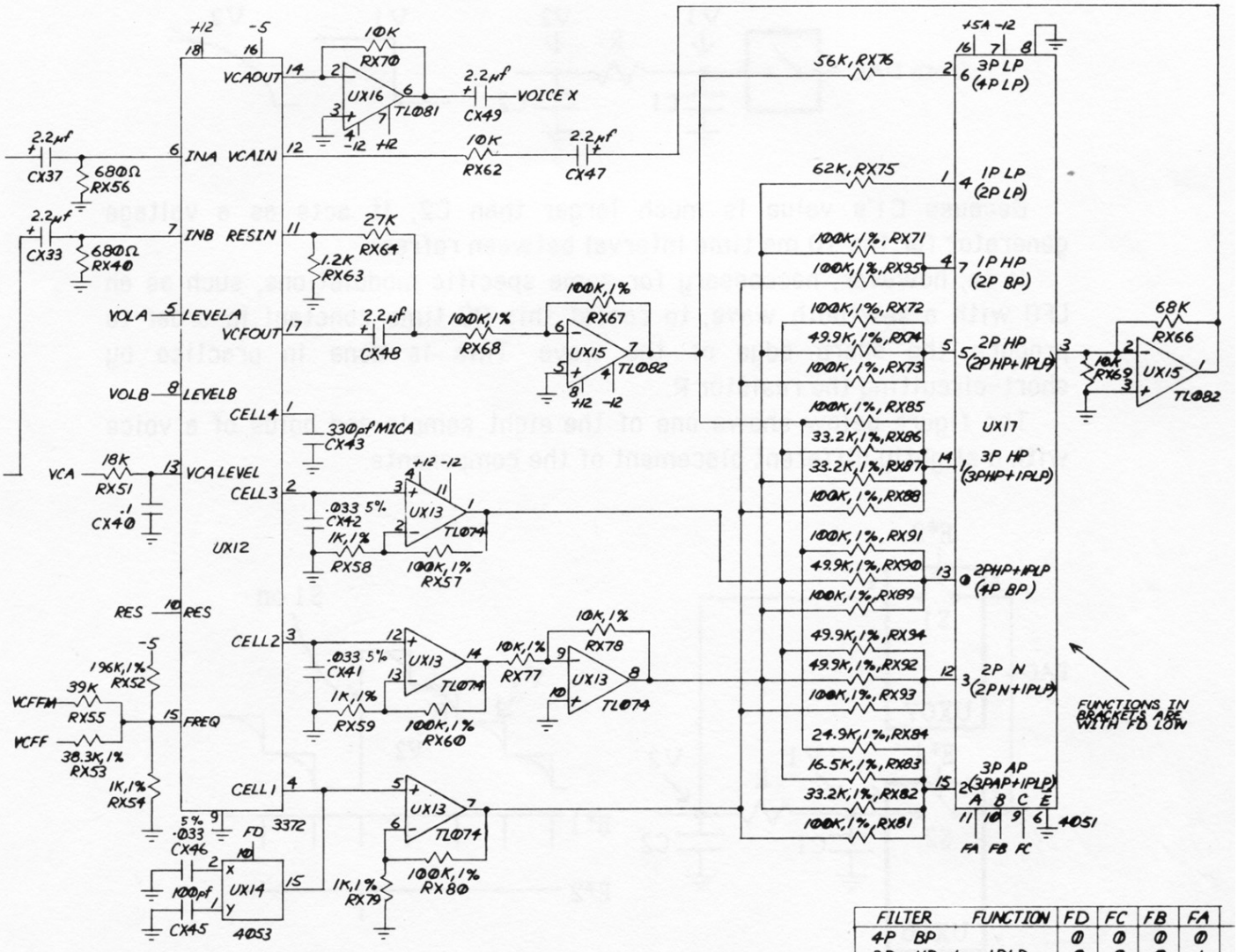

FILTER	FUNCTION	FD	FC	FB	FA
4P BP		0	0	0	0
3P HP + 1PLP		0	0	0	1
3P AP + 1PLP		0	0	1	0
2P N + 1PLP		0	0	1	1
2P LP		0	1	0	0
2P HP + 1PLP		0	1	0	1
4P LP		0	1	1	0
2P BP		0	1	1	1
2P HP + 1PLP		1	0	0	0
3P HP		1	0	0	1
3P AP		1	0	1	0
2P N		1	0	1	1
1P LP		1	1	0	0
2P HP		1	1	0	1
3P LP		1	1	1	0
1P HP		1	1	1	1

SMOOTHING SAMPLE AND HOLD:

Most of the modulations in the Xpander are generated by the voice micro processor and are transmitted to the analog part of the voice through the DAC and sample and hold. Every 10 ms, the processor computes a new value of the modulation and updates the corresponding sample and hold. Without any special attention in the design of the sample and hold, this would produce a step in the control voltage every 10 ms. To avoid this problem, the Xpander S&H use a circuit which allows smoothing of the transition between succesive samples. This is done by adding an RC network after the sample and hold capacitor C1:

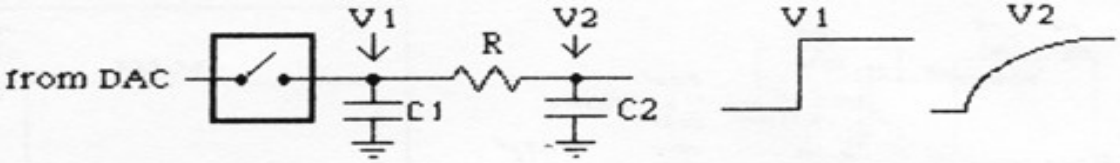

Because C1's value is much larger than C2, it acts as a voltage generator for the 10 ms time interval between refresh.

It is, however, neccessary for some specific modulations, such as an LFO with a sawtooth wave, to cancel this RC time constant in order to produce the sharp edge of the wave. This is done in practice by short-circuiting the resistor R.

The figure below shows one of the eight sample and holds of a voice with a slightly different placement of the components.

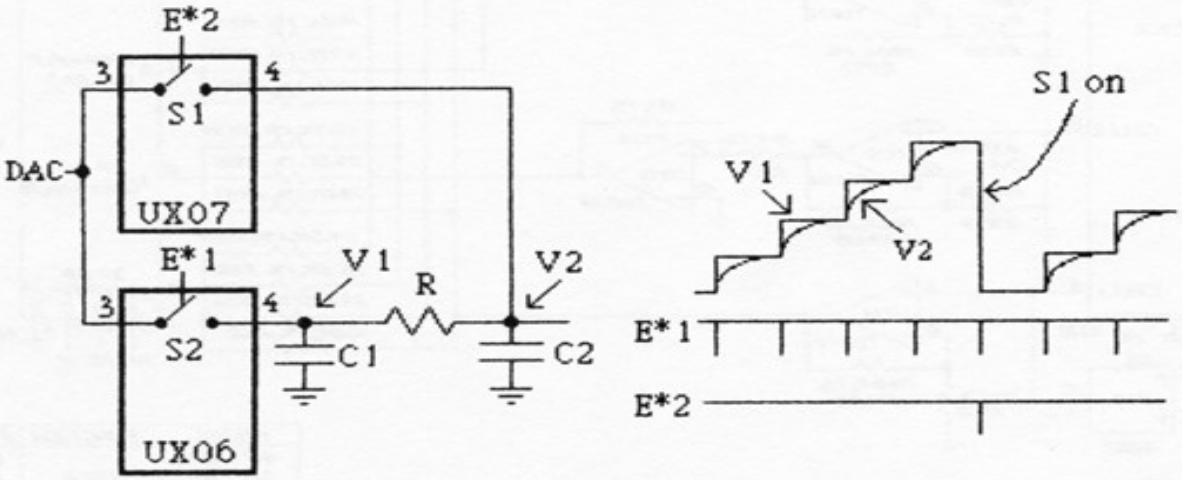

If a smooth transition is required, S2 is switched on while S1 remains open. For a sharp transition S2 and S1 are closed simultaneously.

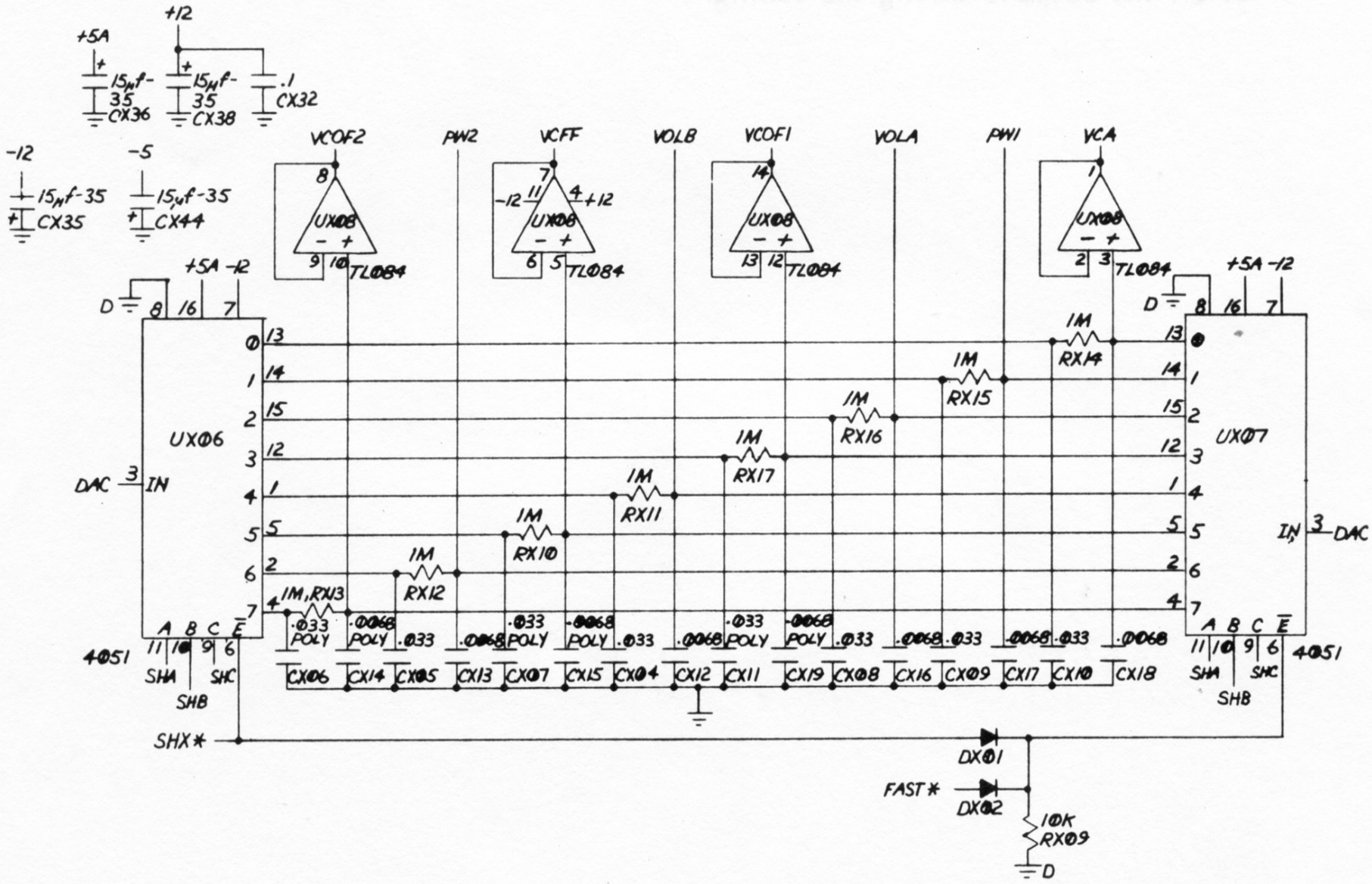
+12
+5A
15µf-35 CX36
15µf-35 CX38
.1 CX32
-12
-5
15µf-35 CX35
15µf-35 CX44
VCOF2
PW2
VCFF
VOLB
VCOF1
VOLA
PW1
VCA
UX08
TL084
UX06
UX07
4051
DAC
IN
SHA
SHB
SHC
SHX*
FAST*
1M RX10
1M RX11
1M RX12
1M,RX13
1M RX14
1M RX15
1M RX16
1M RX17
.033 POLY
.0068 POLY
.033
.0068
CX06
CX14
CX05
CX13
CX07
CX15
CX04
CX12
CX11
CX19
CX08
CX16
CX09
CX17
CX10
CX18
DX01
DX02
10K RX09

PROGRAMMABLE PANNING:

The programmable panning is implemented by the IC's U102 through U107.

The output signal of a voice is routed to one of the eight outputs of its associated IC. The one or two resistors connected to this point distribute the signal to the left and right audio bus. The eighth output is connected to the direct output jack. The enable inputs of those ICs (pin 6) allow muting of all the outputs during the tuning.

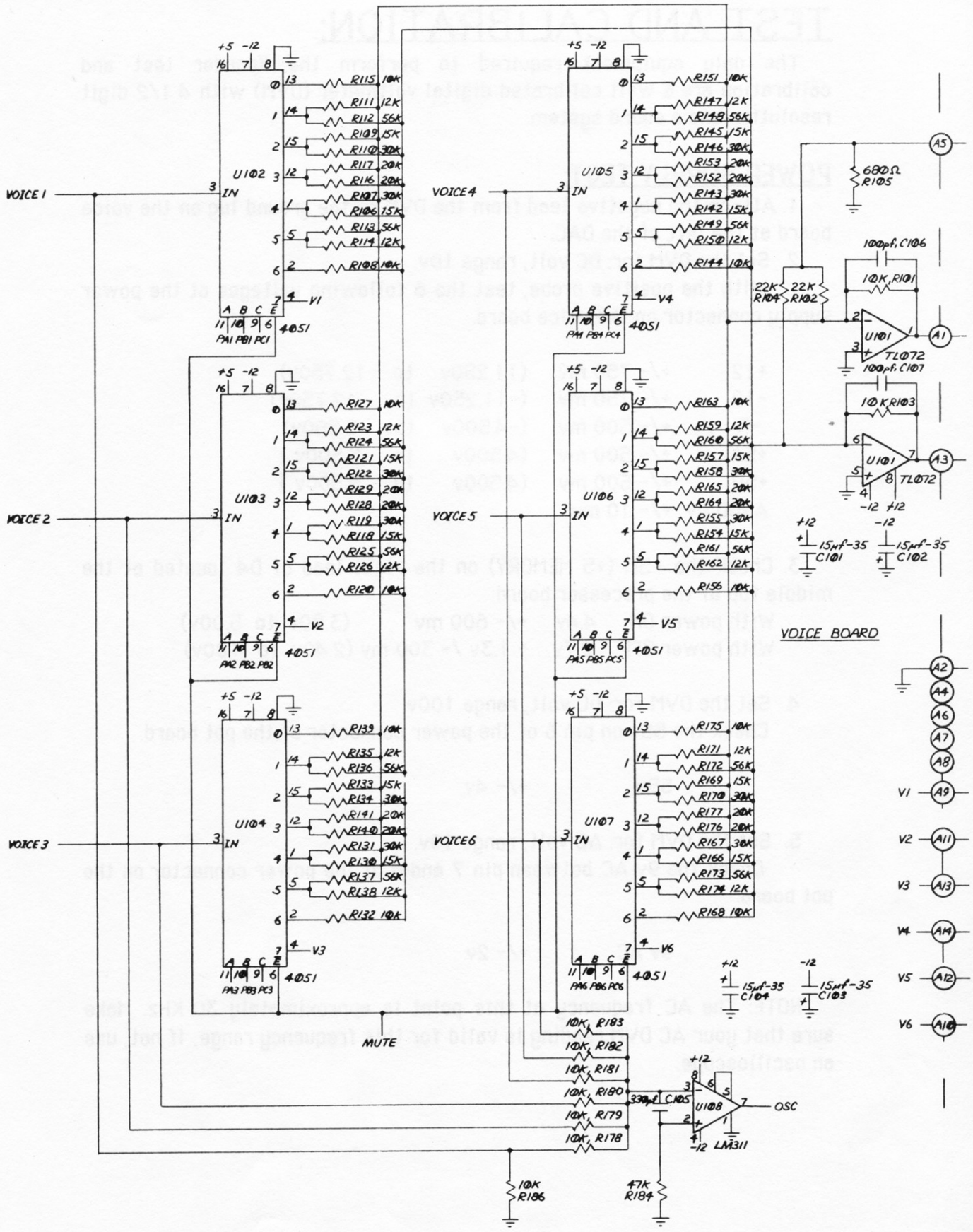
VOICE 1
VOICE 2
VOICE 3
VOICE 4
VOICE 5
VOICE 6
U1102
U1103
U1104
U1105
U1106
U1107
4051
IN
+5 -12
R115 10K
R111 12K
R112 56K
R109 15K
R110 30K
R117 20K
R116 20K
R107 30K
R106 15K
R113 56K
R114 12K
R108 10K
V1
PA1 PB1 PC1
R127 10K
R123 12K
R124 56K
R121 15K
R122 30K
R129 20K
R128 20K
R119 30K
R118 15K
R125 56K
R126 12K
R120 10K
V2
PA2 PB2 PB2
R139 10K
R135 12K
R136 56K
R133 15K
R134 30K
R141 20K
R140 20K
R131 30K
R130 15K
R137 56K
R138 12K
R132 10K
V3
PA3 PB3 PC3
R151 10K
R147 12K
R148 56K
R145 15K
R146 30K
R153 20K
R152 20K
R143 30K
R142 15K
R149 56K
R150 12K
R144 10K
V4
PA4 PB4 PC4
R163 10K
R159 12K
R160 56K
R157 15K
R158 30K
R165 20K
R164 20K
R155 30K
R154 15K
R161 56K
R162 12K
R156 10K
V5
PA5 PB5 PC5
R175 10K
R171 12K
R172 56K
R169 15K
R170 30K
R177 20K
R176 20K
R167 30K
R166 15K
R173 56K
R174 12K
R168 10K
V6
PA6 PB6 PC6
MUTE
10K, R183
10K, R182
10K, R181
10K, R180
10K, R179
10K, R178
10K R186
47K R184
330pf C105
U1108
LM311
OSC
680Ω R105
22K R104
22K R102
100pf, C106
10K, R101
U1101
TL072
100pf, C107
10K R103
15μf-35 C101
15μf-35 C102
15μf-35 C104
15μf-35 C103
VOICE BOARD
A5
A1
A3
A2
A4
A6
A7
A8
A9
A11
A13
A14
A12
A10
V1
V2
V3
V4
V5
V6

TEST AND CALIBRATION:

The only equipment required to perform the Xpander test and calibration are a well calibrated digital voltmeter (DVM) with 4 1/2 digit resolution and a sound system.

POWER SUPPLY TEST:

1. Attach the negative lead from the DVM to the ground lug on the voice board at the left of the DAC.
2. Set the DVM for: DC volt, range 10v.
   With the positive probe, test the 6 following voltages at the power supply connector on the voice board.

+12	+/- 750 mv	(11.250v	to	12.750v)
-12	+/- 750 mv	(-11.250v	to	-12.750v)
-5	+/- 500 mv	(-4.500v	to	-5.500v)
+5A	+/- 500 mv	(4.500v	to	5.500v)
+5D	+/- 500 mv	(4.500v	to	5.500v)
ANGD 0v	+/- 10 mv			

3. Check the +5M (+5 MEMORY) on the right lead of D4 located at the middle top of the processor board.

With power ON	4.4v	+/- 600 mv	(3.80v to 5.00v)
With power OFF	2.7v	+ 1.3v /- 300 mv	(2.40v to 4.00v)

4. Set the DVM for: DC volt, range 100v.
   Check the 55v on pin 6 of the power connector of the pot board.

55v	+/- 4v

5. Set the DVM for: AC volt, range 10v.
   Check the 9v AC between pin 7 and 8 of the power connector on the pot board.

9v AC	+/- 2v

NOTE: The AC frequency at this point is approximately 30 KHz. Make sure that your AC DVM reading is valid for this frequency range, if not, use an oscilloscope.

MAIN PROCESSOR ROM AND RAM TEST:

1. Turn the memory protect swith off on the back panel.
2. Select MASTER PAGE.
3. Select PAGE 2.
4. Select SERVICE.
5. Select MEM
6. Check for the following succesive messages:

RAM 0 OK
RAM 1 OK
RAM 2 OK
ROM 0 OK
ROM 1 OK
ROM 2 OK
ROM 3 OK

If one of the test fails (RAM or ROM X BAD) replace the corresponding chip. RAM 0 = U2, RAM 1 = U3, RAM2 = U4, ROM 0 = U8, ROM 1 = U7, ROM 2 = U6, ROM 3 = U5.

VOICE PROCESSOR ROM AND RAM TEST:

1. Select MASTER PAGE.
2. Select PAGE 2.
3. Select SERVICE.
4. Select VMEM.
5. Allow 20 seconds delay and check for message "CA MEM OK".

If the test fail (CA MEM BAD), replace successively U912, U914, U917 until the test run succesfully.

LEDs TEST:

1. Select MASTER PAGE.
2. Select PAGE 2.
3. Select SERVICE.
4. Select LED.
5. Check for all 16 LEDs lit for approximatly 2 seconds.
   Check then for all LEDs lighting one after each other one at a time.

VACUUM FLUORESCENT DISPLAY TEST:

1. Select MASTER PAGE.
2. Select PAGE 2.
3. Select SERVICE.
4. Select DISP.
5. Check for all segments ON for all 120 digits.
   Check for all segments ON for 1 digit at a time.
   Check for 1 segment ON at a time for all digits of display 1, then display 1 &2, then display 1,2 & 3.

VFD BRIGHTNESS ADJUSTEMENT:

1. Set the DVM for: DC volt, range 100v.
2. Adjust the 55v.

55v +/- 4v

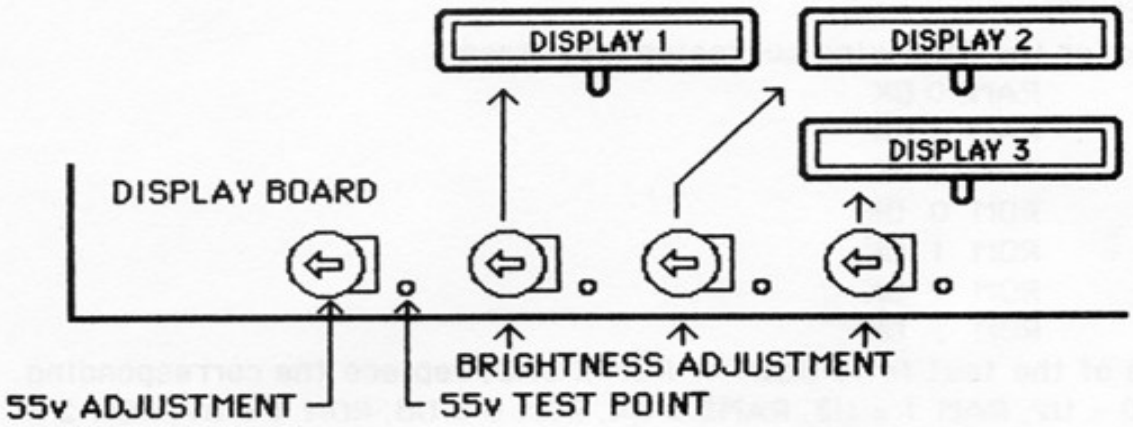

3. Turn the three brightness trimmers all the way up (maximum brightness).
4. Turn down the trimers of the brightest displays to match the dimmest one.

4 VOLT REFERENCE TEST:

1. Attach the negative lead of the DVM to the ground lug on the voice board at the left of the DAC.
2. Set the DVM for: DC volt, range 10v.
3. With the positive probe check the 4 v reference voltage on pin 8 of U815 (TL084) in the DAC area of the voice board.

3.920v < 4v ref < 4.080v (4v +/- 2%)

DAC CALIBRATION:

1. Set DVM for: DC volt, range 10v
2. Attach the negative lead from the DVM to the ground lug on the voice board at the left of the DAC.
3. Select MASTER PAGE.
4. Select PAGE 2.
5. Select SERVICE.
6. Select DAC OFFSET.
7. With the positive probe of the DVM, check the output voltage of the DAC on pin 6 of U812 (TL081) and adjust with DAC trimer T801 for:

0v +/- 1 mv

NOTE: The IC U814 (4053) in the DAC area is very sensitive to short circuit. Be very careful when testing pin 6 of U812.

DAC MONOTONICITY TEST:

1. Select MASTER PAGE.
2. Select PAGE 2.
3. Select SERVICE.
4. Select DAC MONO.
5. Check for no or very seldom beep on the audio output.

ANALOG TO DIGITAL CONVERTER CALIBRATION:

Note: This calibration is going to set the volt per octave of the CV in. It is assumed that the controlling CVs are in the range 0 to 5 volt, that they are set for 1volt per octave +/- .2% with a linearity of at least .1% and that the offset is no more than +/- 15 mv. If the controlling device does not fulfill these requirements it will have to be corrected.

A) DVM METHOD: (calibration relative to internal DVM reference)

1. Set the DVM for: DC volt, range 10v
2. Attach the negative lead of the DVM to the ground reference of the ADC on the left side of R65 (10 Ohm) on the pot board.
3. With the positive probe of the DVM, test the ADC reference voltage (pin 9 of U20) on the lower lead of R47 on the pot board. Adjust with trimer T1 for:

2.667v +/- 2mv (2.665v to 2.669v)

B) AUDIO METHOD:(Calibration relative to the CV generator reference)

1. Select a single patch appropriate for checking voice tuning.
2. Set voice 1 and 2 to be controled by CV 1 and CV 2.
3. Supply simultaneously CV1 input with 0.000 volt and CV2 with 5.000 volt. Gate voice 1 and 2 (Using a well calibrated DSX is one way to do it).
5. Adjust trimer T1 to obtain two stable notes C0 and C5.

MISCELLANEOUS:

SOFTWARE RESET:

In case of program lockup or abnormal software behavior, you can reset the memory of the processors to an initial default configuration.

To do so;

1. Hold down the CLEAR switch (most right switch in the modulation source select area) while you turn the power on.
2. Select YES under display 3. (selecting NO will cancel the reset).

The patch memory remains unaffected by this operation.

SOFTWARE VERSION NUMBER:

You can find out the software revision numbers actually installed in an Xpander by:

1. Select MASTER PAGE.
2. Select PAGE 2.
3. Select VERSION.

UNTUNE:

You can cancel all the automatic correction (VCO, PW, RES, VCF tuning) by:

1. Select MASTER PAGE.
2. Select PAGE 2.
3. Select SERVICE.
4. Select UNTUNE.

All the correction parameters will be set to 0. This may be useful when for example you wish to find out how much apart the resonance control of two VCFs really are, or if you want to check the linearity of a sample and hold ... etc.

To retrive the tuning parameters, do a tune all in the TUNE PAGE.

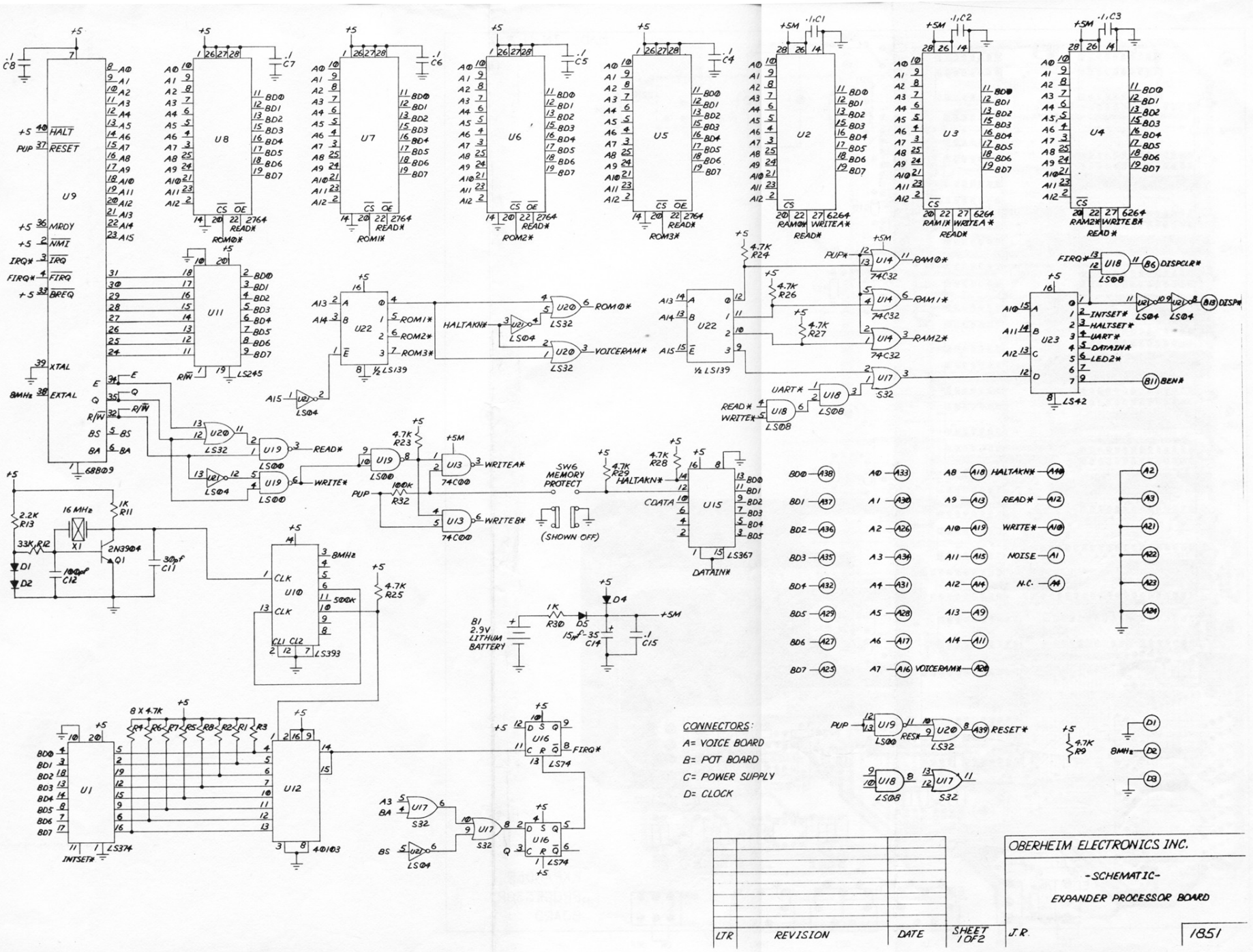

CONNECTORS:

A= VOICE BOARD

B= POT BOARD

C= POWER SUPPLY

D= CLOCK

LTR	REVISION	DATE	SHEET 1 OF 2	J.R.

OBERHEIM ELECTRONICS INC.

-SCHEMATIC-

EXPANDER PROCESSOR BOARD

1851

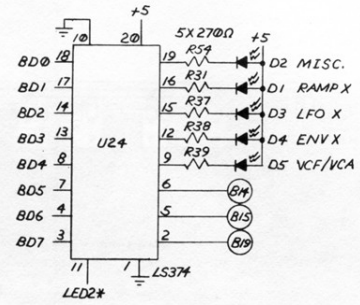

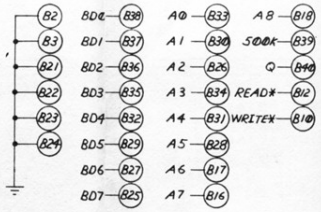

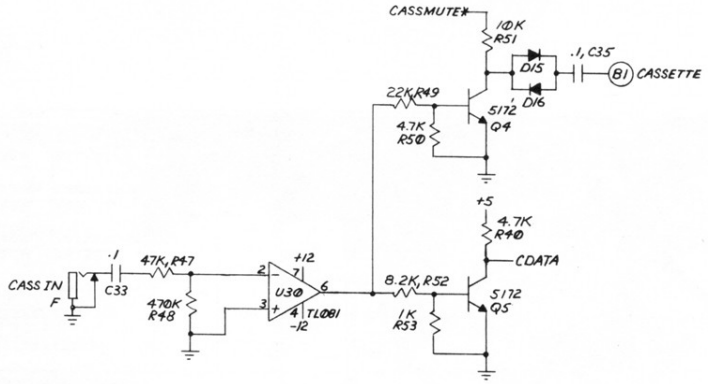

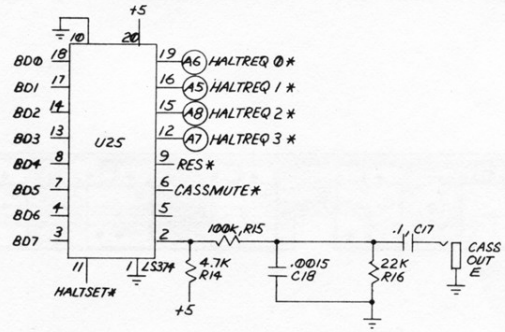

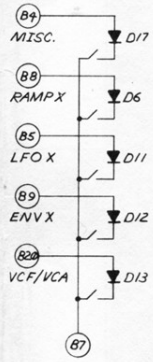

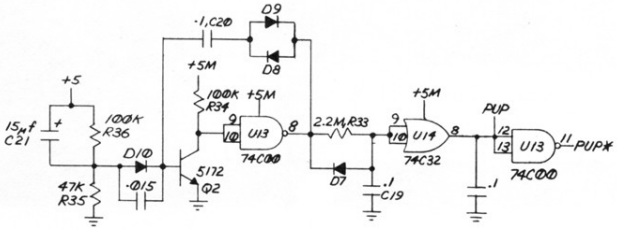

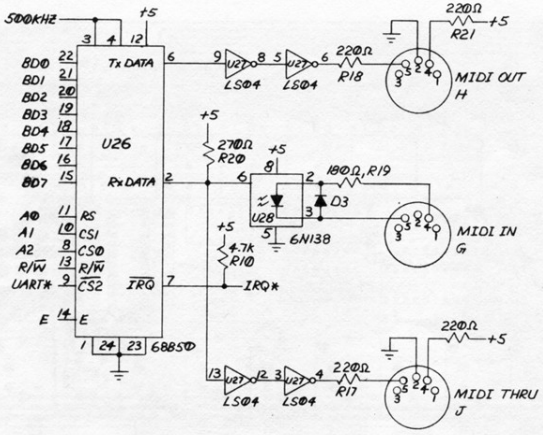

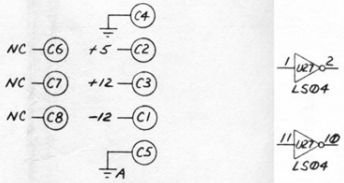

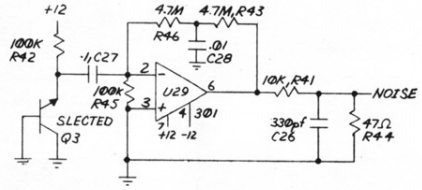

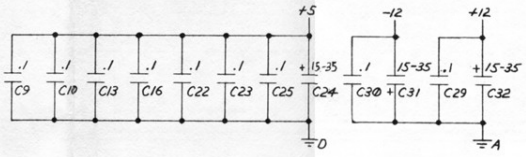

OBERHEIM ELECTRONICS INC

-SCHEMATIC-

EXPANDER PROCESSOR BOARD

SHEET 2 OF 2

J.R.

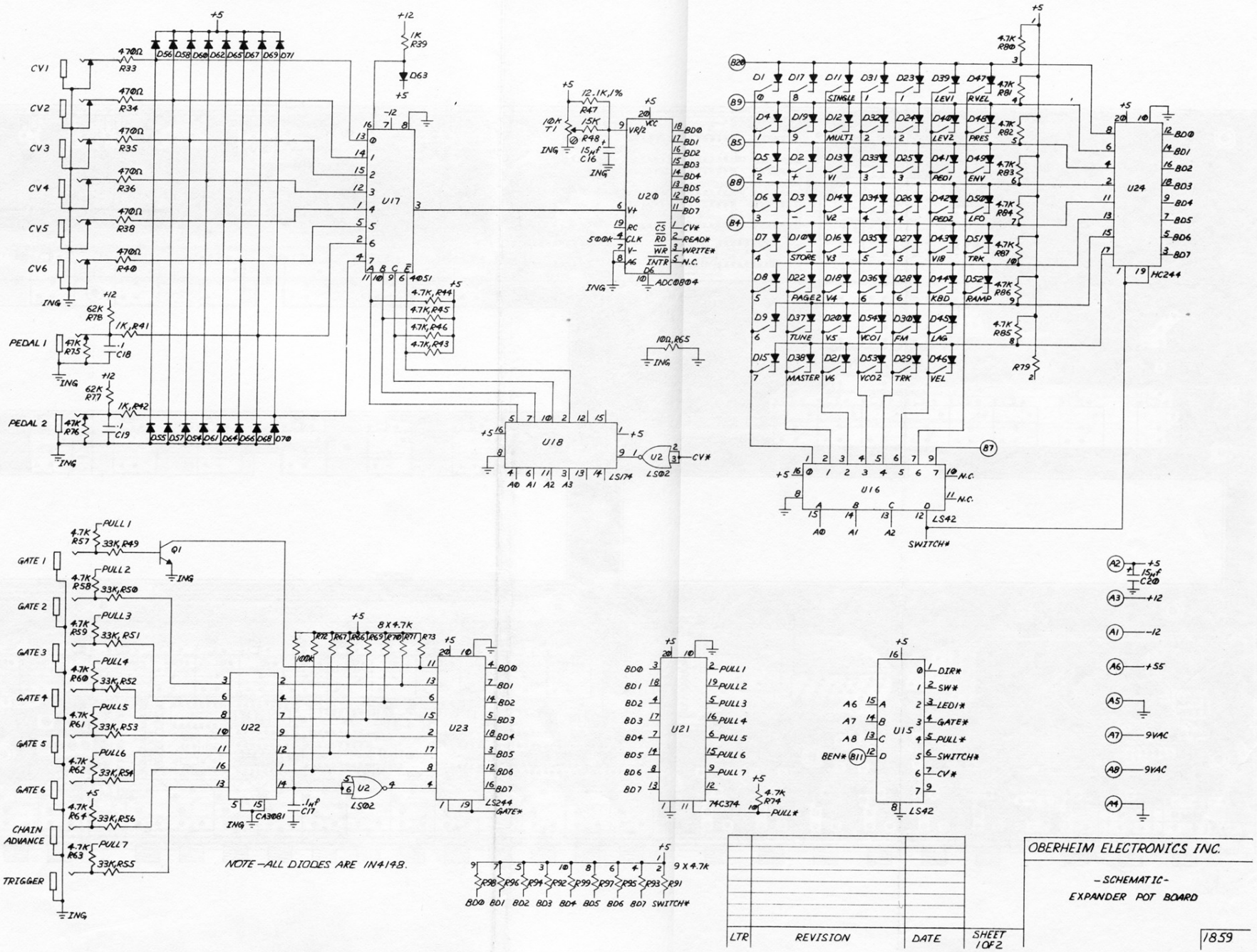

OBERHEIM ELECTRONICS INC.

-SCHEMATIC-

EXPANDER POT BOARD

1859

LTR	REVISION	DATE	SHEET 1 OF 2

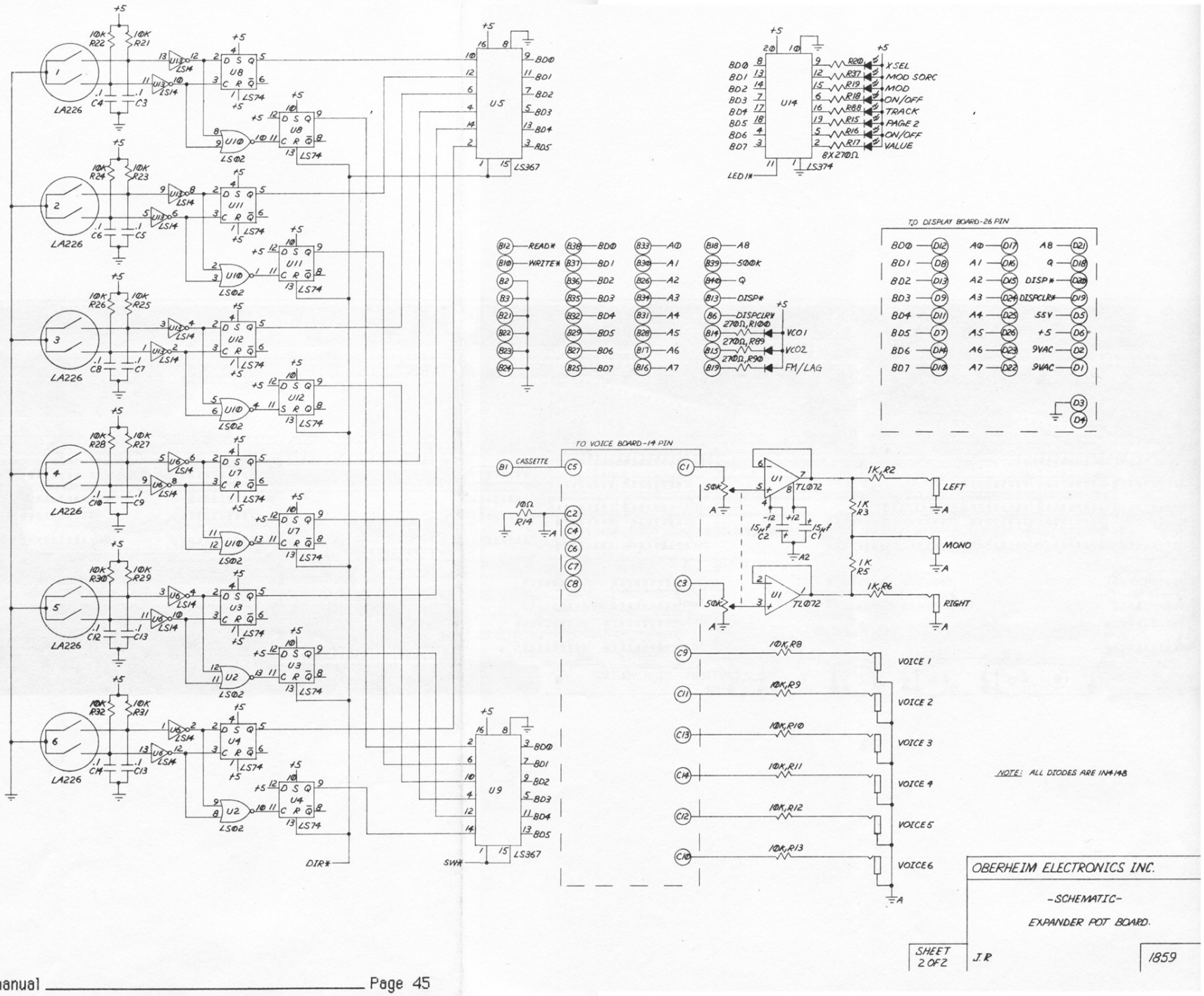
OBERHEIM ELECTRONICS INC.
-SCHEMATIC-
EXPANDER POT BOARD.
SHEET 2 OF 2
J.R
1859
NOTE: ALL DIODES ARE IN4148
TO DISPLAY BOARD-26 PIN
TO VOICE BOARD-14 PIN
LA226
LS74
LS14
LS02
LS367
LS374
TL072
READ#
WRITE#
CASSETTE
DISP#
DISPCLR#
VCO1
VCO2
FM/LAG
LEFT
MONO
RIGHT
VOICE 1
VOICE 2
VOICE 3
VOICE 4
VOICE 5
VOICE 6
X SEL
MOD SORC
MOD
ON/OFF
TRACK
PAGE 2
ON/OFF
VALUE
8X270Ω
DIR#
SW#
LED1#

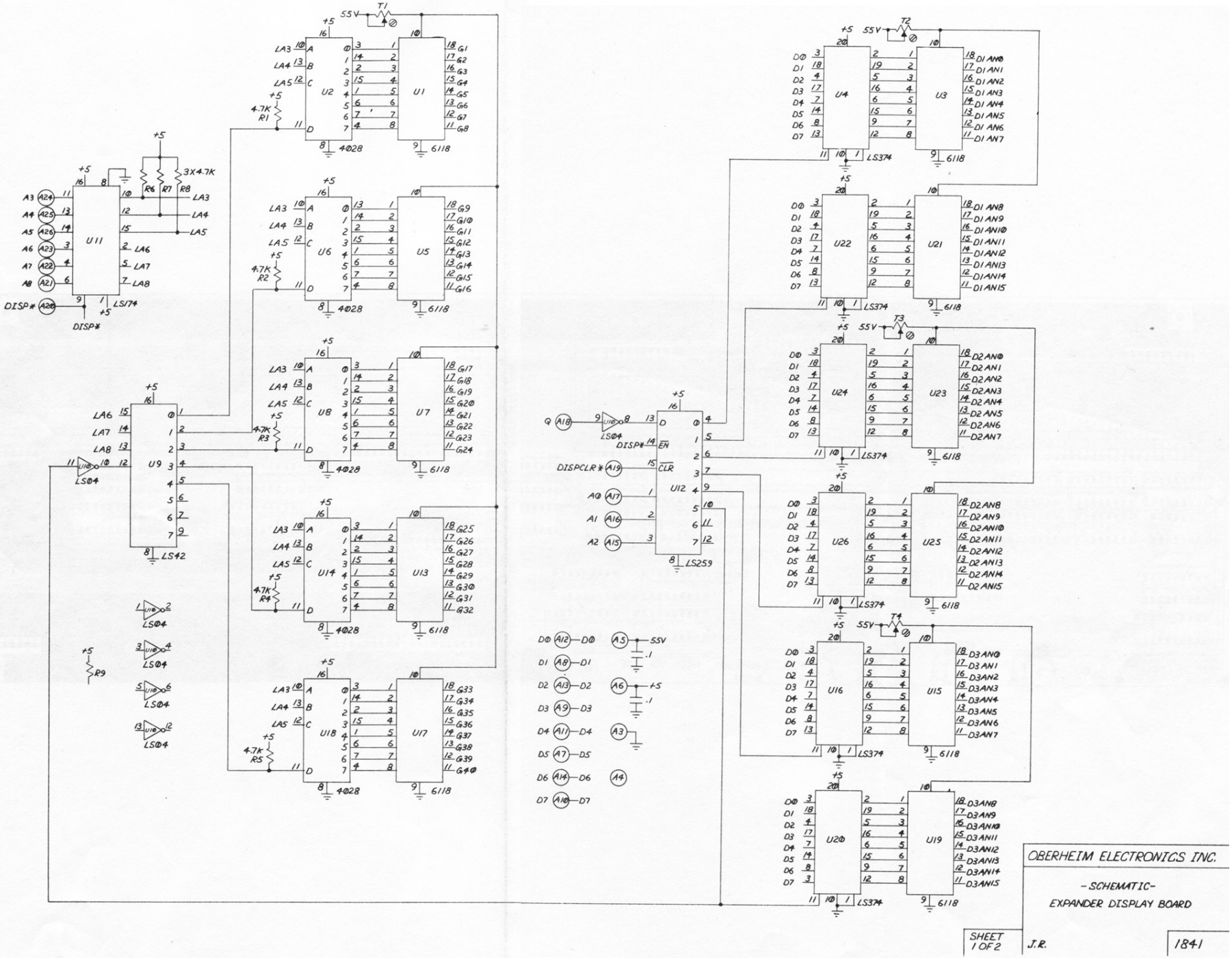
OBERHEIM ELECTRONICS INC.
-SCHEMATIC-
EXPANDER DISPLAY BOARD
SHEET 1 OF 2
J.R.
1841

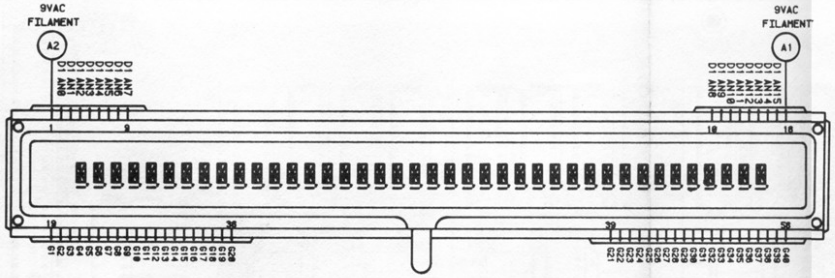

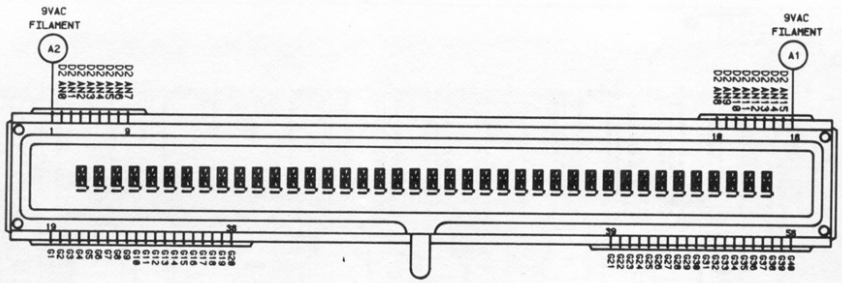

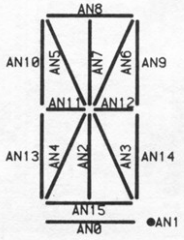

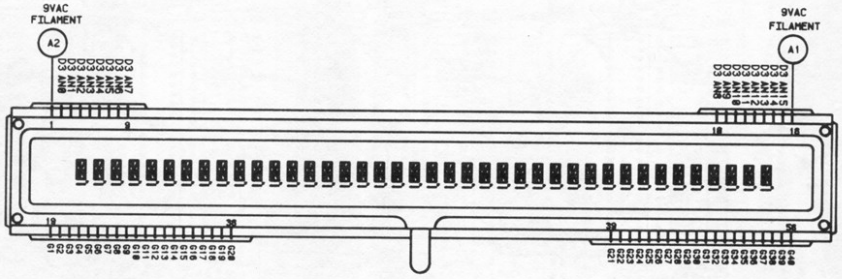

LTR	REVISION	DATE	SHEET 2 OF 2

OBERHEIM ELECTRONICS INC.

-SCHEMATIC-

EXPANDER DISPLAY BOARD

J. R.

1841

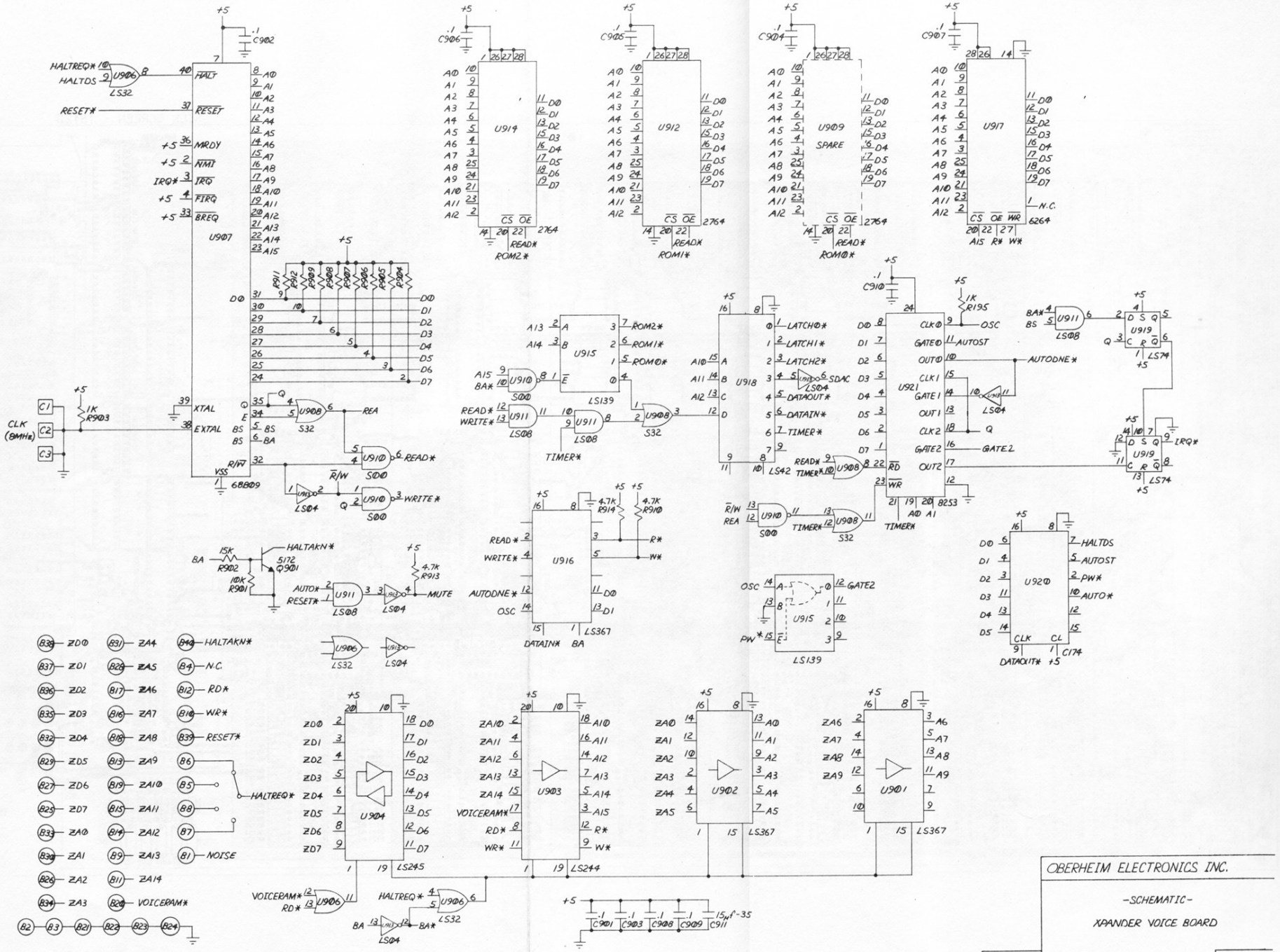
OBERHEIM ELECTRONICS INC.
-SCHEMATIC-
XPANDER VOICE BOARD
SHEET 1 OF 4
J.R.
1808

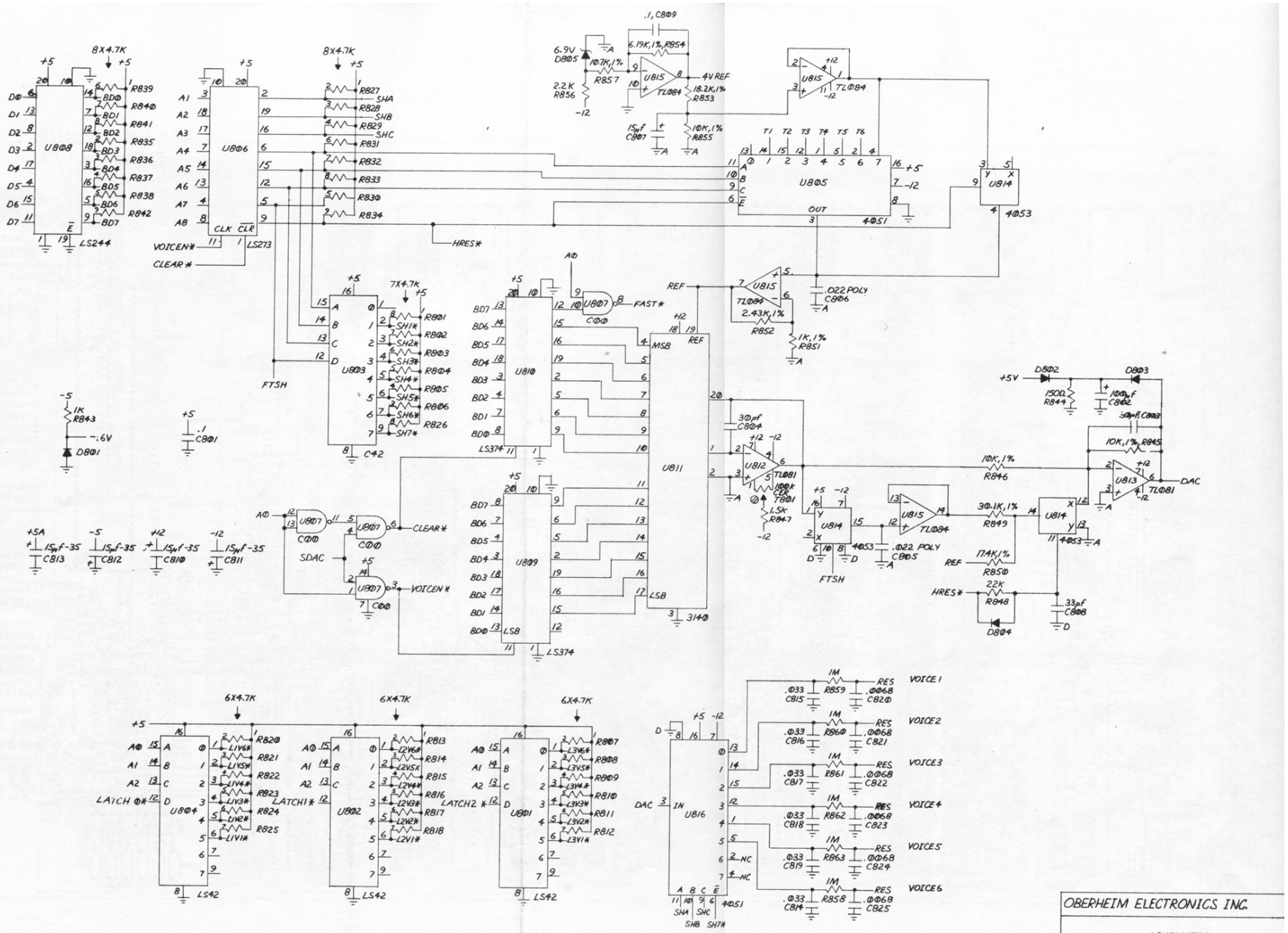
OBERHEIM ELECTRONICS INC.
-SCHEMATIC-
XPANDER VOICE BOARD
SHEET 2 OF 4
J.R
1808

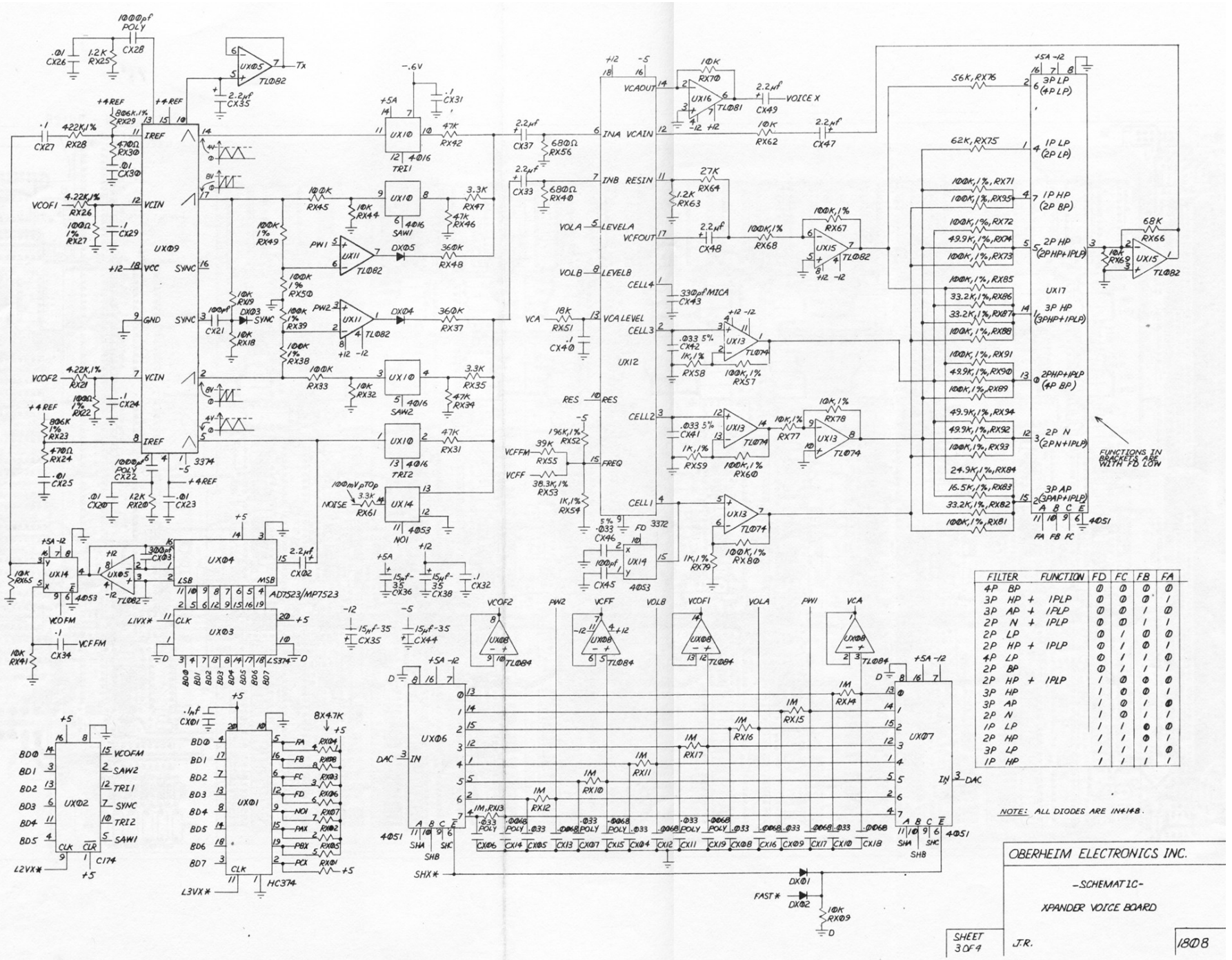
FILTER FUNCTION FD FC FB FA
4P BP 0 0 0 0
3P HP + 1PLP 0 0 0 1
3P AP + 1PLP 0 0 1 0
2P N + 1PLP 0 0 1 1
2P LP 0 1 0 0
2P HP + 1PLP 0 1 0 1
4P LP 0 1 1 0
2P BP 0 1 1 1
2P HP + 1PLP 1 0 0 0
3P HP 1 0 0 1
3P AP 1 0 1 0
2P N 1 0 1 1
1P LP 1 1 0 0
2P HP 1 1 0 1
3P LP 1 1 1 0
1P HP 1 1 1 1
FUNCTIONS IN BRACKETS ARE WITH FD LOW
NOTE: ALL DIODES ARE IN4148.
OBERHEIM ELECTRONICS INC.
-SCHEMATIC-
XPANDER VOICE BOARD
SHEET 3 OF 4
J.R.
1808

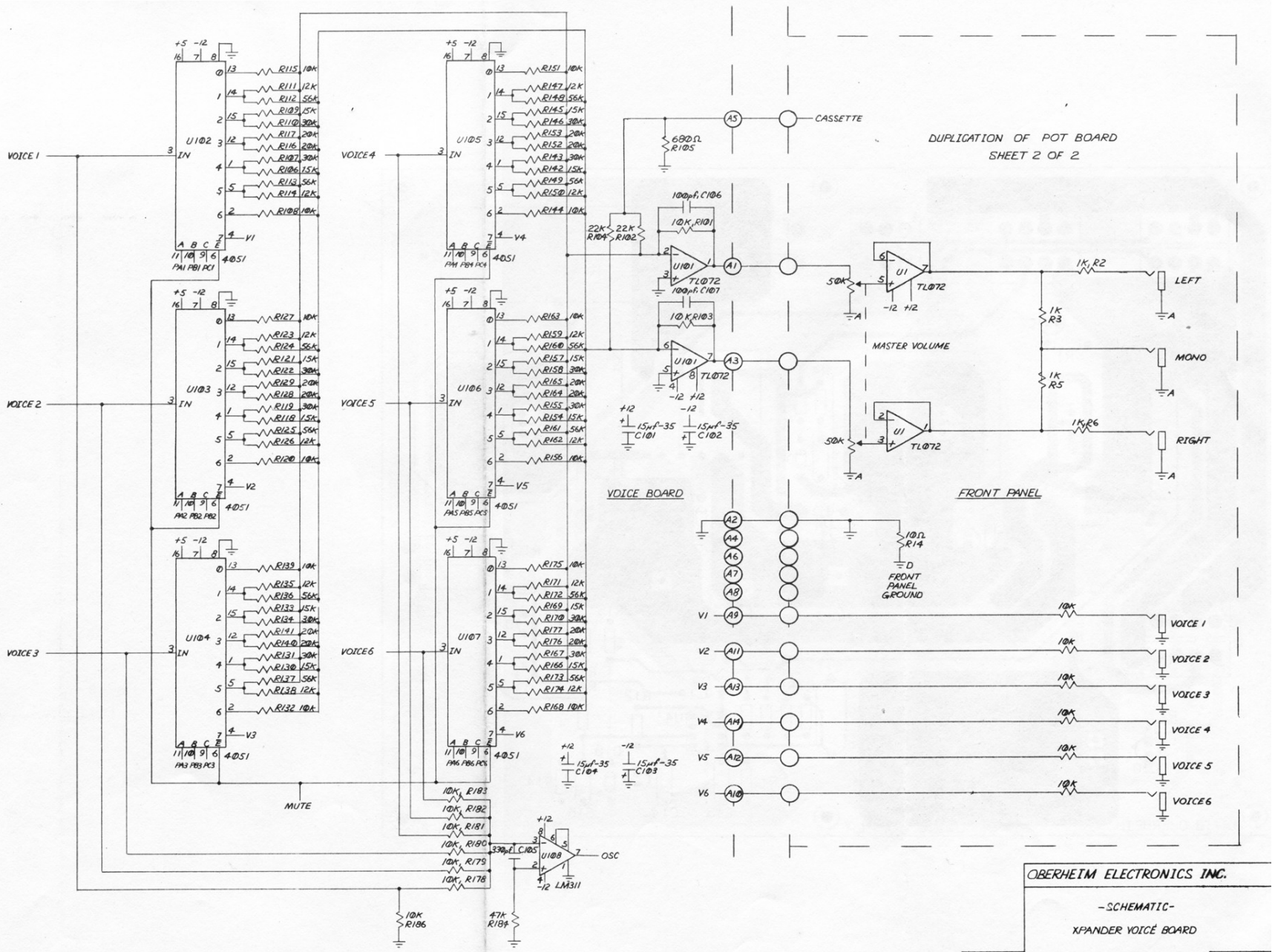
VOICE 1
VOICE 2
VOICE 3
VOICE 4
VOICE 5
VOICE 6
U1102
U1103
U1104
U1105
U1106
U1107
4051
MUTE
CASSETTE
680Ω R105
DUPLICATION OF POT BOARD
SHEET 2 OF 2
U1101 TL072
U1 TL072
MASTER VOLUME
LEFT
MONO
RIGHT
1K R2
1K R3
1K R5
1K R6
50K
VOICE BOARD
FRONT PANEL
FRONT PANEL GROUND
10Ω R14
OSC
U1108 LM311
OBERHEIM ELECTRONICS INC.
-SCHEMATIC-
XPANDER VOICE BOARD
SHEET 4 OF 4
J.R.
1808

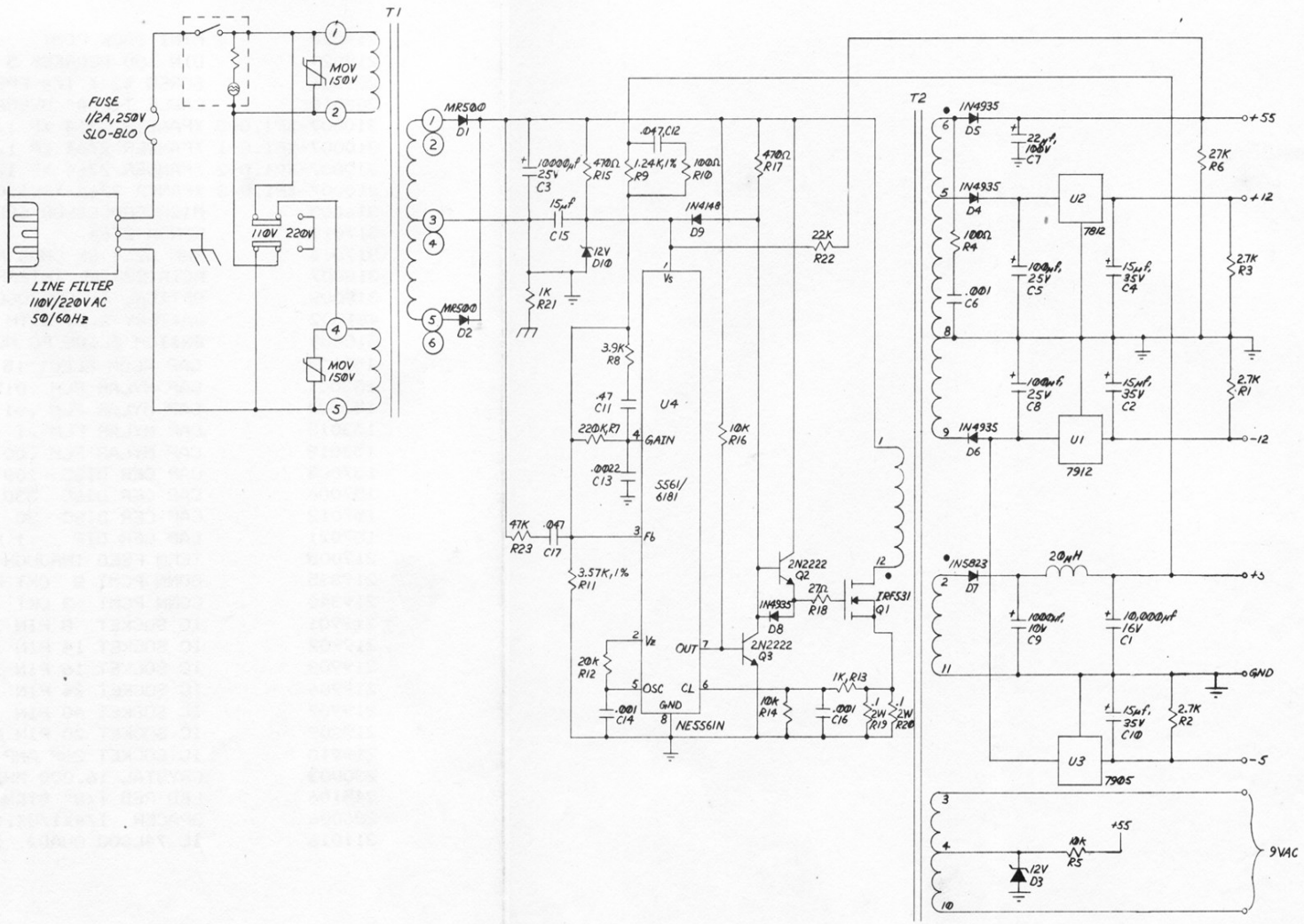

LAST COMPONENT NO:'S USED
R23
C17
U4
D10
Q3
L1
T1

LTR	REVISION	DATE

OBERHEIM ELECTRONICS INC.

-SCHEMATIC-

EXPANDER POWER SUPPLY

J.R.

1869

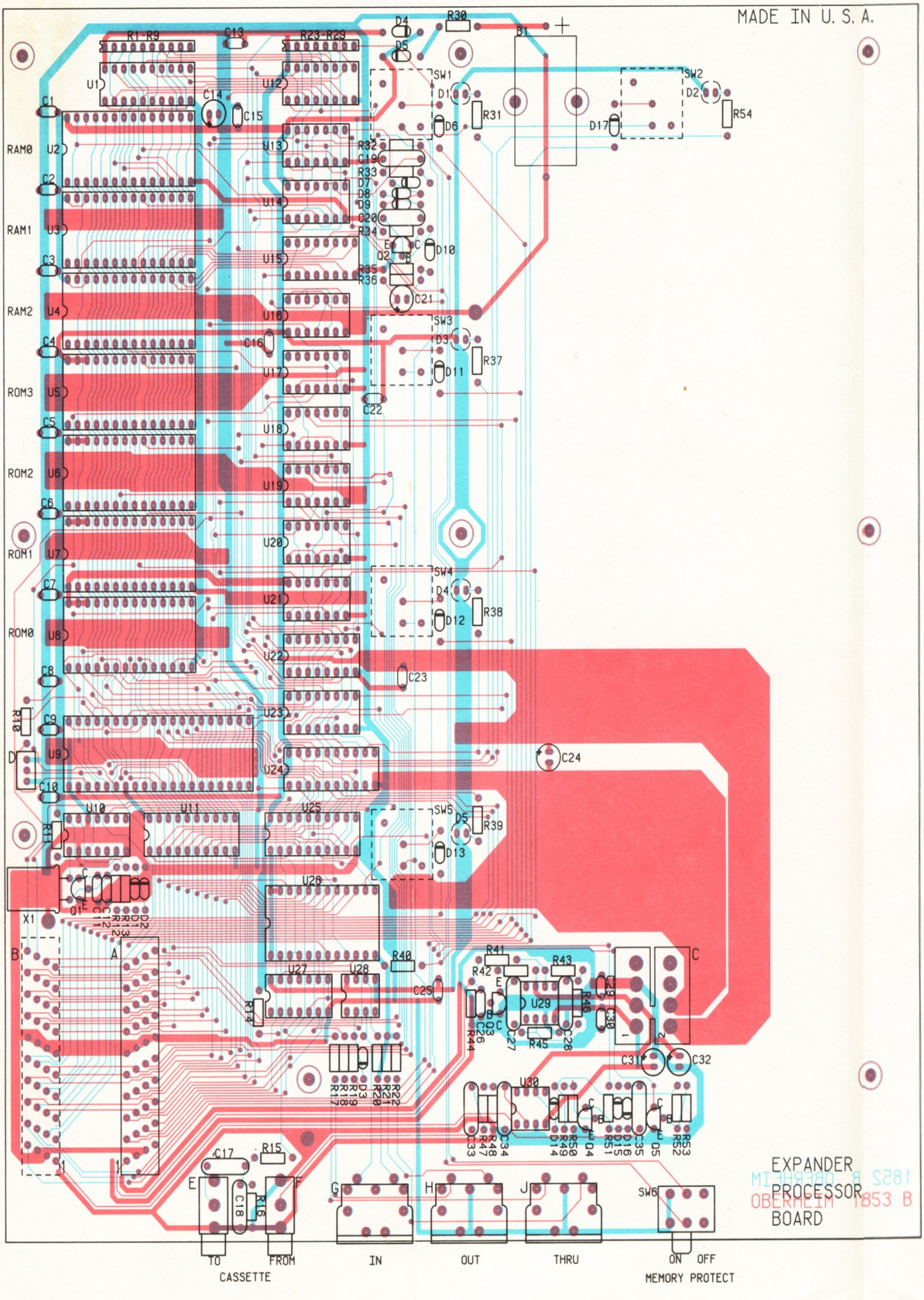
MADE IN U. S. A.
EXPANDER
PROCESSOR
BOARD
TO
CASSETTE
FROM
IN
OUT
THRU
ON OFF
MEMORY PROTECT

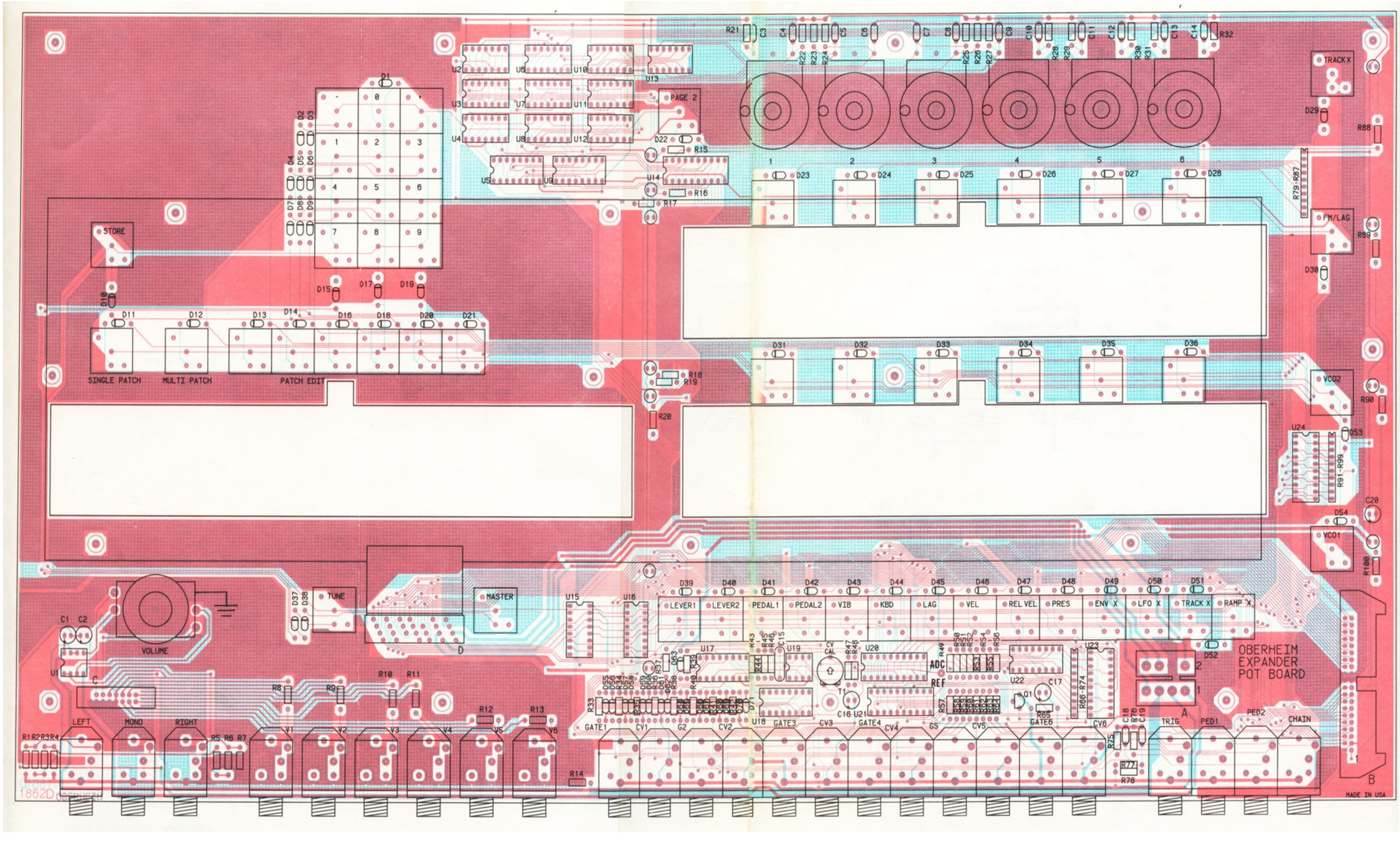
STORE
SINGLE PATCH
MULTI PATCH
PATCH EDIT
PAGE 2
TRACKX
FM/LAG
VCO2
VCO1
TUNE
MASTER
VOLUME
LEFT
MONO
RIGHT
LEVER1
LEVER2
PEDAL1
PEDAL2
VIB
KBD
LAG
VEL
REL VEL
PRES
ENV X
LFO X
TRACK X
RAMP X
TRIG
PED1
PED2
CHAIN
OBERHEIM
EXPANDER
POT BOARD
MADE IN USA

SILK SCREEN - 1812B

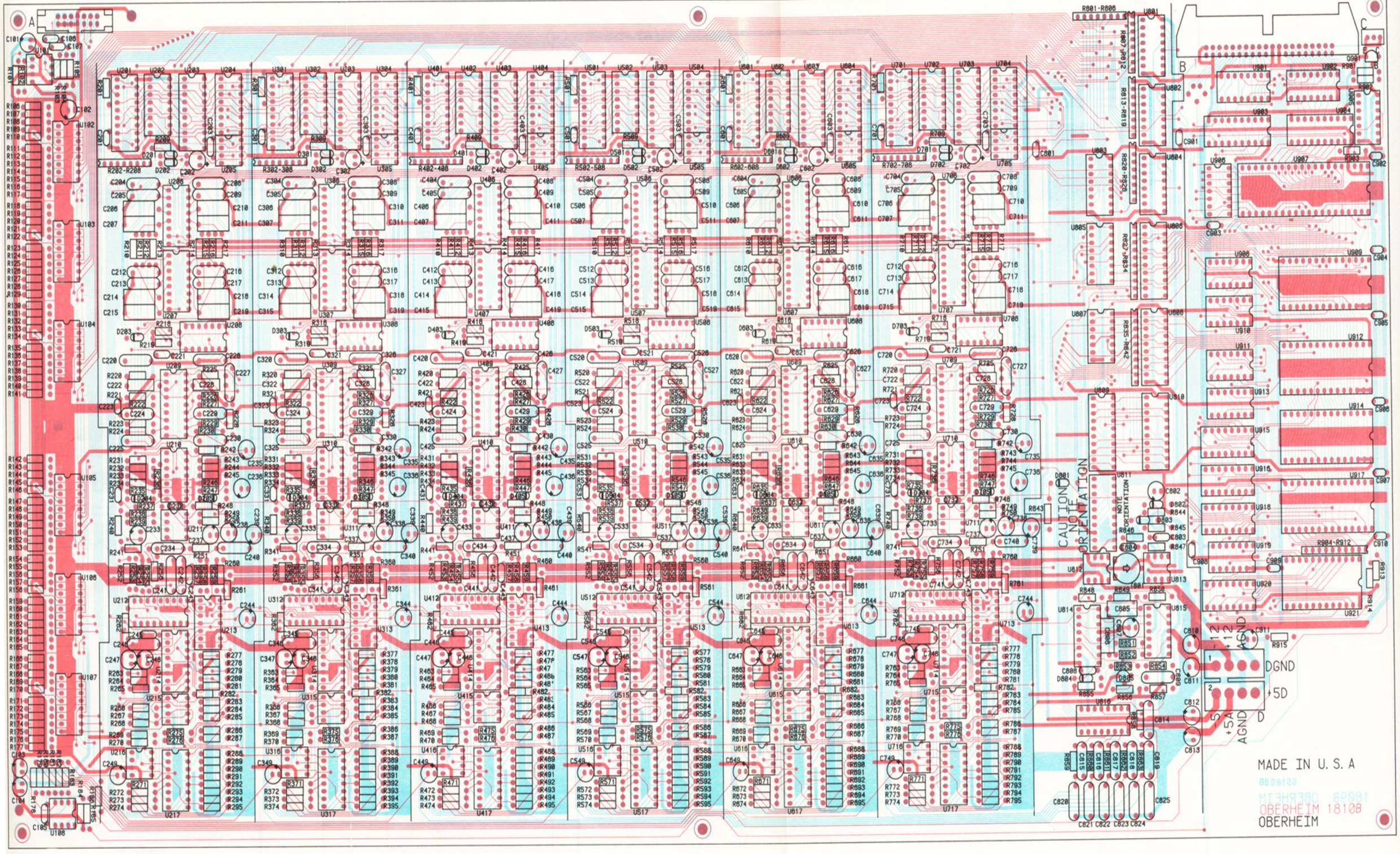

OBERHEIM
EXPANDER DISPLAY BOARD

DISPLAY 1

DISPLAY 2

DISPLAY 3

1 9 10 18 19 38 39 58

U1 U2 U3 U4 U5 U6 U7 U8 U9 U10 U11 U12 U13 U14 U15 U16 U17 U18 U19 U20 U21 U22 U23 U24 U25 U26

R1-R9

C1 C2

GRID VOLTAGE T1

DISP 1 VOLTAGE T2

DISP 2 VOLTAGE T3

DISP 3 VOLTAGE T4

+55V

CAUTION: HIGH VOLTAGE

OBERHEIM 1844A

MADE IN USA

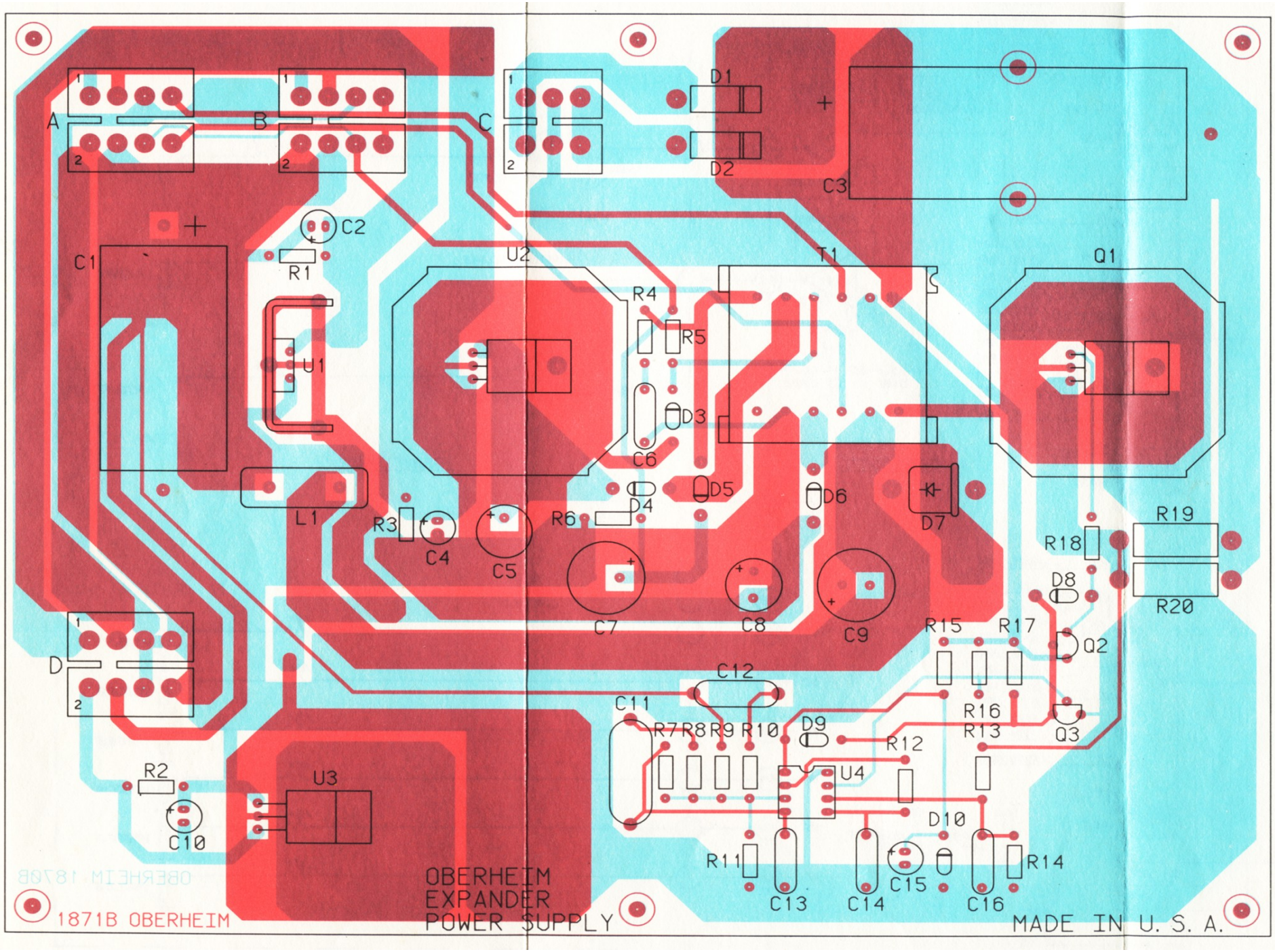
A
B
C
D
1
2
D1
D2
C1
C2
C3
R1
U1
U2
T1
Q1
R4
R5
D3
C6
D4
D5
D6
D7
L1
R3
C4
C5
R6
C7
C8
C9
R18
R19
R20
D8
Q2
Q3
R15
R16
R17
R13
C12
C11
R7
R8
R9
R10
D9
R12
U4
U3
R2
C10
R11
C13
C14
C15
D10
C16
R14
OBERHEIM
EXPANDER
POWER SUPPLY
1871B OBERHEIM
MADE IN U. S. A.

OBERHEIM PART NUMBER CROSS REFERENCE:

PROCESSOR BOARD:

Oberheim number	Description	Quantity
219028	MINI JACK PCMT	2
219029	DIN 180 DEGREES 5 PINS PCMT	3
281066	SCREW #2 X 1/4 PPSMS BLUNT PHIL PAN	6
289019	CABLE TIE 4" OVERALL LENGTH T18R	1
310007-XP1.0-0	XPANDER 2764 XP 1.0-0	1
310007-XP1.0-1	XPANDER 2764 XP 1.0-1	1
310007-XP1.0-2	XPANDER 2764 XP 1.0-2	1
310007-XP1.0-3	XPANER 2764 XP 1.0-3	1
316003	MICROPROCESSOR 68B09 8-BIT	1
317013	EPROM 2764	4
317014	RAM 6264 8K CMOS RAM	3
318007	ACIA(SERIAL INTERFACE IC) MC68B50P	1
318008	OPTICAL IC PHOTOCOUPLER HP 6N138	1
401002	BATTERY 2.9V LITH 440-SPC G 32/13	1
510409	SWITCH SLIDE PC MOUNT SWRFT C62206L	1
151024	CAP ALUM ELECT 15 25V RADIAL	5
153001	CAP MYLAR FLM .015	1
153004	CAP MYLAR FLM .01 .4LS	1
153013	CAP MYLAR FLM .1 .4LS	6
153018	CAP MYLAR FLM .0015 .4LS	1
157005	CAP CER DISC 100 PF 1000V	1
157006	CAP CER DISC 330 PF 500V	1
157012	CAP CER DISC 30 PF 1000V	1
157021	CAP CER DIP .1 MF 20% 50V	19
217005	TERM FEED THROUGH-025 PIN CONCORD	3
219335	CONN PCMT 8 CKT F AMP 1-350212-1	1
219340	CONN PCMT 3 CKT MOLEX 22-03-2031	1
219901	IC SOCKET 8 PIN ICY-083-S3	3
219902	IC SOCKET 14 PIN ICY-143-S3	10
219903	IC SOCKET 16 PIN ICY-163-S3	4
219906	IC SOCKET 24 PIN	1
219907	IC SOCKET 40 PIN	1
219909	IC SOCKET 20 PIN AMP #640464-3	4
219910	IC SOCKET 28P AMP #640362-3	7
230003	CRYSTAL 16.000 MHZ	1
245106	LED RED 1/8" STANLEY SAR3931	5
286006	SPACER 1/4X1/8X.140 ID NYLON	5
311016	IC 74LS00 QUAD2 IN NAND	1

PROCESSOR BOARD:

Oberheim number	Description	Quantity
311018	IC 74LS139 DUAL 1OF4 DECOD/DMULXR	1
311019	IC 74LS42 BCD-TO-DEC DECODER 16 PIN	1
311021	IC 74LS74 D F/F	1
311022	IC 74LS04 HEX INVERTER	2
311025	IC 74LS367 HEX BUFFER	1
311029	IC 74LS08 QUAD3 IN AND GATE	1
311032	IC 74LS245 OCTAL BUSS TRANSCEIVER	1
311033	IC 74LS374 OCTAL D FLIP-FLOP 3-S	3
311034	IC 74LS393 DUAL 4BIT RIPPLE COUNTER	1
311037	IC 74LS32 QUAD2 IN OR GATE	1
311041	IC 74S32 SCHOTTKY QUAD OR GATE	1
313017	IC 301A HI-PERF OP AMP LM301AN	1
313025	IC TL081 SING B1 FET OP AMP TL081CN	1
315041	IC 40103 8-STAGE DOWN COUNTER	1
315047	IC 74C32 QUAD 2-IN OR GATES - CMOS	1
315052	IC 74C00 CMOS QUAD NAND	1
478102	RESISTOR FXD 1/4W 2-5% 1 K	3
478103	RESISTOR FXD 1/4W 1-5% 10 K	2
478104	RESISTOR FXD 1/4W 2-5% 100 K	6
478181	RESISTOR FXD 1/4W 2-5% 180 OHM	1
478221	RESISTOR FXD 1/4W 2-5% 220 OHM	4
478222	RESISTOR FXD 1/4W 2-5% 2.2 K	1
478223	RESISTOR FXD 1/4W 2-5% 22 K	2
478225	RESISTOR FXD 1/4W 2-5% 2.2 MEG	1
478271	RESISTOR FXD 1/4W 2-5% 270 OHM	6
478333	RESISTOR FXD 1/4W 2-5% 33 K	1
478470	RESISTOR FXD 1/4W 2-5% 47 OHM	1
478472	RESISTOR FXD 1/4W 2-5% 4.7 K	4
478473	RESISTOR FXD 1/4W 2-5% 47 K	2
478474	RESISTOR FXD 1/4W 2-5% 470 K	1
478475	RESISTOR FXD 1/4W 2-5% 4.7 MEG	2
478822	RESISTOR FXD 1/4W 2-5% 8.2 K	1
479003	RESISTOR NETWORK 4.7K SIP 10 PIN	1
479007	RESISTOR NETWORK 4.7K SIP 8 PIN	1
481001	DIODE SIGNAL 1N4148	16
485003	TRANSISTOR SS NPN MPS5172	3
485005	TRANSISTOR SS NPN 2N3904	1
485502	TRANSISTOR SS NPN MPS5172 SEL BLUE	1
510024-C	SWITCH MARQUARDT 6401 0005 BLK PLN	5
651851	XPANDER PROCESSOR PCB ART 1852-1853	1
750187-0	CABLE SUB-ASSY OB-XPANDER #6	1
750188-0	CABLE SUB-ASSY OB-XPANDER #7	1

POT BOARD:

Oberheim number	Description	Quantity
151024	CAP ALUM ELECT 15 25V RADIAL	4
157002	CAP CER DISC .1 MF 20V	14
157021	CAP CER DIP .1 MF 20% 50V	1
219021	PH JACK 2 COND PCMT SWRFT RN111PC	17
219027	PH JACK 2 C PCMT W/SWITCH RN 112APC	8
219335	CONN PCMT 8 CKT F AMP 1-350212-1	1
219521	CONN RIBBON 40P RIGHT ANGLE HEADER	1
219525	CONN RIBBON 14P VERTICAL HEADER	1
219901	IC SOCKET 8 PIN ICY-083-S3	1
219902	IC SOCKET 14 PIN ICY-143-S3	10
219903	IC SOCKET 16 PIN ICY-163-S3	7
219909	IC SOCKET 20 PIN AMP #640464-3	5
245106	LED RED 1/8" STANLEY SAR3931	11
282003	NUT 3/8-32X12X.093 HEX NI PLT	2
286006	SPACER 1/4X1/8X.140 ID NYLON	11
286523	WASHER BELLEVILLE .380X.690X.035BL	1
311017	IC 74LS02 QUAD2 IN NOR	1
311019	IC 74LS42 BCD-TO-DEC DECODER 16 PIN	2
311021	IC 74LS74 D F/F	6
311025	IC 74LS367 HEX BUFFER	2
311031	IC 74LS244 OCTAL 3-STATE BUFFER	1
311033	IC 74LS374 OCTAL D FLIP-FLOP 3-S	1
311035	IC 74LS14 HEX SCHMITT TRIGGER	2
311038	IC 74LS174 HEX D-TYPE FLIP-FLOP W/R	1
313047	IC TL072CP DUAL BI FET L NOI OP-AMP	1
313049	IC 16 P TRANSISTOR ARRAY NPN CA3081	1
315025	IC 4051 ANAL MULTI-DEMULTI CD4051BE	1
315049	IC 74C374 CMOS OCTAL D FLIP FLOP	1
315050	IC 74HC02 QUAD2 IN NOR	1
315051	IC ADC 0804 ANALOG TO DIGITAL CONV.	1
315053	IC 74HC244 CMOS OCTAL TRI STATE BUF	1
475410	RESISTOR FXD MT FLM 12.1 K 1% 1/8	1
476010	TRIMMER 10 K 375E103B CRMT	1
477037	POT 50K STEREO 20% CTS U2-450SF	1
478100	RESISTOR FXD 1/4W 2-5% 10 OHM	2
478102	RESISTOR FXD 1/4W 2-5% 1 K	5
478103	RESISTOR FXD 1/4W 1-5% 10 K	20
478104	RESISTOR FXD 1/4W 2-5% 100 K	1
478153	RESISTOR FXD 1/4W 2-5% 15 K	1

Oberheim number	Description	Quantity
478271	RESISTOR FXD 1/4W 2-5% 270 OHM	11
478303	RESISTOR FXD 1/4W 2-5% 30 K	8
478471	RESISTOR FXD 1/4W 2-5% 470 OHM	6
478472	RESISTOR FXD 1/4W 2-5% 4.7 K	12
478623	RESISTOR FXD 1/4W 2-5% 62 K	2
479003	RESISTOR NETWORK 4.7K SIP 10 PIN	3
481001	DIODE SIGNAL 1N4148	71
485003	TRANSISTOR SS NPN MPS5172	1
510024-0	SWITCH MARQUARDT 6401 0105 BLK W/0	1
510024-1	SWITCH MARQUARDT 6401 0015 BLK W/1	1
510024-2	SWITCH MARQUARDT 6401 0025 BLK W/2	1
510024-3	SWITCH MARQUARDT 6401 0035 BLK W/3	1
510024-4	SWITCH MARQUARDT 6401 0045 BLK W/4	1
510024-5	SWITCH MARQUARDT 6401 0055 BLK W/5	1
510024-6	SWITCH MARQUARDT 6401 0065 BLK W/6	1
510024-7	SWITCH MARQUARDT 6401 0075 BLK W/7	1
510024-8	SWITCH MARQUARDT 6401 0085 BLK W/8	1
510024-9	SWITCH MARQUARDT 6401 0095 BLK W/9	1
510024-A	SWITCH MARQUARDT 6401 0325 BLK W/+	1
510024-B	SWITCH MARQUARDT 6401 0335 BLK W/-	1
510024-C	SWITCH MARQUARDT 6401 0005 BLK PLN	41
510024-D	SWITCH MARQUARDT 6401 0006 RED PLN	1
510603	STEP ENCOD NUTS WASHER 25MM 30 ALPS	6
651860	XPANDER POT BOARD PCB ART 1861-1862	1
750189-0	CABLE SUB-ASSY OB-XPANDER #8	1

DISPLAY BOARD:

Oberheim number	Description	Quantity
241012	V FLOURESCENT DISPLAY FG405A2 ITRON	3
476010	TRIMMER 10 K 375E103B CRMT	4
153013	CAP MYLAR FLM .1 .4LS	1
157021	CAP CER DIP .1 MF 20% 50V	1
217005	TERM FEED THROUGH-025 PIN CONCORD	6
219512	CONN RIBBON 26P RIGHT ANGLE HEADER	1
219902	IC SOCKET 14 PIN ICY-143-S3	1
219903	IC SOCKET 16 PIN ICY-163-S3	8
219905	IC SOCKET 18 PIN	9
219909	IC SOCKET 20 PIN AMP #640464-3	6
311019	IC 74LS42 BCD-TO-DEC DECODER 16 PIN	1
311022	IC 74LS04 HEX INVERTER	1
311033	IC 74LS374 OCTAL D FLIP-FLOP 3-S	6
311038	IC 74LS174 HEX D-TYPE FLIP-FLOP W/R	1
311042	IC 74LS259 BCD TO DEC DECODER	1
315008	IC 4028 BCD-DEC DECODER MC14028CP	5
315055	IC UDN-6118 OCTAL HIGH VOLTAGE BUFF	11
479003	RESISTOR NETWORK 4.7K SIP 10 PIN	1
651842	XPANDER DISPLAY PCB ART 1843-1844	1

VOICE BOARD:

Oberheim number	Description	Quantity
310007-CA1.0-0	XPANDER 2764 CA 1.0-0	1
310007-CA1.0-1	XPANDER 2764 CA 1.0-1	1
311039	IC 74LS273 OCTAL D-TYPE FLIP-FLOP	1
311043	IC 74HC374 HI-SPEED CMOS OCTAL D	6
315048	IC 7523 AD OR MP 8-BIT DAC	6
316003	MICROPROCESSOR 68B09 8-BIT	1
317013	EPROM 2764	2
317014	RAM 6264 8K CMOS RAM	1
318004	8253-5 PROGRAMMABLE INTERVAL TIMER	1
318005	14 BIT DAC HYBRI HS3140C-4/MP7614KN	1
319009	AUDIO SIGNAL PROCESSOR CEM-3372	6
319010	DUAL VCO CEM-3374	6
476011	TRIMMER 100 K 375E104B CRMT	1
151024	CAP ALUM ELECT 15 25V RADIAL	34
151035	CAP ALUM ELECT 2.2 25V RADIAL	42
151040	CAP ALUM ELECT 100MF 10V RADIAL	1
153004	CAP MYLAR FLM .01 .4LS	24
153013	CAP MYLAR FLM .1 .4LS	31
153017	CAP MYLAR FLM .0068 .4LS	30
153022	CAP MYLAR FLM .033 .4LS	30
153024	CAP MYLAR FLM .033 5% RA 333UM100K	18
157005	CAP CER DISC 100 PF 1000V	12
157006	CAP CER DISC 330 PF 500V	7
157012	CAP CER DISC 30 PF 1000V	3
157013	CAP POLYPROP 1000 PF 400V	12
157019	CAP POLYPROP .022 MF 2.5% 160V	2
157021	CAP CER DIP .1 MF 20% 50V	35
157031	CAP POLYPROP .033 20%	24
157033	CAP POLYPROP .0068 20%	24
157035	CAP SILMICA 330 PF 10% RADIAL	6
217005	TERM FEED THROUGH-025 PIN CONCORD	2
219335	CONN PCMT 8 CKT F AMP 1-350212-1	1
219340	CONN PCMT 3 CKT MOLEX 22-03-2031	1
219521	CONN RIBBON 40P RIGHT ANGLE HEADER	1
219525	CONN RIBBON 14P VERTICAL HEADER	1
219901	IC SOCKET 8 PIN ICY-083-S3	28
219902	IC SOCKET 14 PIN ICY-143-S3	21
219903	IC SOCKET 16 PIN ICY-163-S3	61
219905	IC SOCKET 18 PIN	12
219906	IC SOCKET 24 PIN	1
219907	IC SOCKET 40 PIN	1
219909	IC SOCKET 20 PIN AMP #640464-3	19
219910	IC SOCKET 28P AMP #640362-3	4
311018	IC 74LS139 DUAL 1OF4 DECOD/DMULXR	1
311019	IC 74LS42 BCD-TO-DEC DECODER 16 PIN	4
311021	IC 74LS74 D F/F	2
311022	IC 74LS04 HEX INVERTER	1
311025	IC 74LS367 HEX BUFFER	3
311029	IC 74LS08 QUAD3 IN AND GATE	1
311031	IC 74LS244 OCTAL 3-STATE BUFFER	2
311032	IC 74LS245 OCTAL BUSS TRANSCEIVER	1
311033	IC 74LS374 OCTAL D FLIP-FLOP 3-S	8
311037	IC 74LS32 QUAD2 IN OR GATE	1
311040	IC 74S00 SCHOTTKY QUAD NAND GATE	1
311041	IC 74S32 SCHOTTKY QUAD OR GATE	1
313021	IC 311 VOLT COMPARATOR/BUF LM311N	1
313024	IC TL084 QUAD BI FET OP AMP TL084CN	7

Oberheim number	Description	Quantity
313025	IC TL081 SING BI FET OP AMP TL081CN	8
313026	IC TL082 DUAL 81-FET OP AMP TL082	18
313046	IC TL074CN QUAD BI FET L NOI OP-AMP	6
313047	IC TL072CP DUAL BI FET L NOI OP-AMP	1
315013	IC 4016 QUAD MULTIPLEXER MC14016CP	6
315015	IC 74C174 HEX D FLIP-FLOP MM74C174	7
315024	IC 4053 TRI 2-CH ANAL MULT C04053BE	1
315025	IC 4051 ANAL MULTI-DEMULTI CD4051BE	26
315029	IC 74C42 BCD-TO-DECIMAL DECODER	1
315052	IC 74C00 CMOS QUAD NAND	1
315056	IC 4053 TRI 2-CH ANAL MULT SIG ONLY	6
475250	RESISTOR FXD MT FLM 100 OHM 1% 1/8	12
475302	RESISTOR FXD MT FLM 1.00 K 1% 1/8	25
475340	RESISTOR FXD MT FLM 2.43 K 1% 1/8	1
475362	RESISTOR FXD MT FLM 4.22 K 1% 1/8	12
475385	RESISTOR FXD MT FLM 6.19 K 1% 1/8	1
475402	RESISTOR FXD MT FLM 10.0 K 1% 1/8	15
475405	RESISTOR FXD MT FLM 10.7 K 1% 1/8	1
475423	RESISTOR FXD MT FLM 16.5 K 1% 1/8	6
475425	RESISTOR FXD MT FLM 17.4 K 1% 1/8	1
475427	RESISTOR FXD MT FLM 18.2 K 1% 1/8	1
475440	RESISTOR FXD MT FLM 24.9 K 1% 1/8	6
475448	RESISTOR FXD MT FLM 30.1 K 1% 1/8	1
475452	RESISTOR FXD MT FLM 33.2 K 1% 1/8	18
475458	RESISTOR FXD MT FLM 38.3 K 1% 1/8	6
475469	RESISTOR FXD MT FLM 49.9 K 1% 1/8	24
475501	RESISTOR FXD MT FLM 100 K 1% 1/8	114
475525	RESISTOR FXD MT FLM 196 K 1% 1/8	6
475559	RESISTOR FXD MT FLM 422 K 1% 1/8	6
475587	RESISTOR FXD MT FLM 806 K 1% 1/8	12
478102	RESISTOR FXD 1/4W 2-5% 1 K	3
478103	RESISTOR FXD 1/4W 1-5% 10 K	69
478104	RESISTOR FXD 1/4W 2-5% 100 K	12
478105	RESISTOR FXD 1/4W 2-5% 1 MEG	54
478122	RESISTOR FXD 1/4W 2-5% 1.2 K	18
478123	RESISTOR FXD 1/4W 2-5% 12 K	12
478151	RESISTOR FXD 1/4W 2-5% 150 OHM	1
478152	RESISTOR FXD 1/4W 2-5% 1.5 K	1
478153	RESISTOR FXD 1/4W 2-5% 15 K	13
478183	RESISTOR FXD 1/4W 2-5% 18 K	6
478203	RESISTOR FXD 1/4W 2-5% 20 K	12
478222	RESISTOR FXD 1/4W 2-5% 2.2 K	1
478223	RESISTOR FXD 1/4W 2-5% 22 K	3
478273	RESISTOR FXD 1/4W 2-5% 27 K	6
478303	RESISTOR FXD 1/4W 2-5% 30 K	12
478332	RESISTOR FXD 1/4W 2-5% 3.3 K	18
478333	RESISTOR FXD 1/4W 2-5% 33 K	12
478364	RESISTOR FXD 1/4W 2-5% 360 K	12
478393	RESISTOR FXD 1/4W 2-5% 39 K	6
478471	RESISTOR FXD 1/4W 2-5% 470 OHM	12
478472	RESISTOR FXD 1/4W 2-5% 4.7 K	9
478473	RESISTOR FXD 1/4W 2-5% 47 K	25
478563	RESISTOR FXD 1/4W 2-5% 56 K	18

Oberheim number	Description		Quantity
478623	RESISTOR FXD 1/4W 2-5% 62 K		6
478681	RESISTOR FXD 1/4W 2-5% 680 OHM		13
478683	RESISTOR FXD 1/4W 2-5% 68 K		6
479003	RESISTOR NETWORK 4.7K SIP 10 PIN		3
479007	RESISTOR NETWORK 4.7K SIP 8 PIN		10
481001	DIODE SIGNAL	1N4148	34
482017	DIODE ZENER 6.9V	LM329CZ	1
485003	TRANSISTOR SS NPN MPS5172		1
604950	WIRE 28 EXE 1-28		6

POWER SUPPLY:

Oberheim number	Description	Quantity
151024	CAP ALUM ELECT 15 25V RADIAL	4
151037	CAP ALUM ELECT 10000MF16V AXIAL	1
151041	CAP ALUM ELECT 22 100V RADIAL ESR	1
151042	CAP ALUM ELECT 100 25V RADIAL ESR	2
151043	CAP ALUM ELECT 1000 10V RADIAL ESR	1
151044	CAP ALUM ELECT 10000 25V AXIAL	1
153008	CAP MYLAR FLM .047 .4LS +/-10%	2
153009	CAP MYLAR FLM .47 .4LS	1
153014	CAP MYLAR FLM .0022 .4LS	1
153015	CAP MYLAR FLM .001 .4LS	3
180002	CHOKE 20 MICRO HENRY 8103-LI INCON	1
219334	CONN PCMT 6 CKT F AMP 1-380999-0	1
261003	HEAT SINK TO-220 X 1/2" H 371	1
261009	HEAT SINK IERC 7-388-14X-BA	2
281018	SCREW 6-32X5/16 PHIL PAN BLK OX	2
281044	SCREW 6-32X1/4 PHIL PAN BLK OX	2
282009	NUT 6-32 W/LOCKWASHER KEPS CAD	4
289010	SOLDER LUG #6 SCREW CLEAR BT 1414-6	1
289045	CABLE TIE 7" OVERALL LENGTH 08470	1
313036	IC 7812 POWER REG +12V TO220	1
313038	IC LM7905CT POWER REG -05V TO220	1
313044	IC 7912 POWER REG-12V TO220	1
315057	IC SIGNET NE5561N SPRAGUE ULN8161M	1
474003	RESISTOR FXD WW 2W 5% .1 OHM BWH	2
475311	RESISTOR FXD MT FLM 1.24 K 1% 1/8	1
475353	RESISTOR FXD MT FLM 3.57 K 1% 1/8	1
478101	RESISTOR FXD 1/4W 2-5% 100 OHM	2
478102	RESISTOR FXD 1/4W 2-5% 1 K	2
478103	RESISTOR FXD 1/4W 1-5% 10 K	3
478203	RESISTOR FXD 1/4W 2-5% 20 K	2
478223	RESISTOR FXD 1/4W 2-5% 22 K	1
478224	RESISTOR FXD 1/4W 2-5% 220 K	1
478270	RESISTOR FXD 1/4W 2-5% 27 OHM	1
478272	RESISTOR FXD 1/4W 2-5% 2.7 K	3
478273	RESISTOR FXD 1/4W 2-5% 27 K	1
478392	RESISTOR FXD 1/4W 2-5% 3.9 K	1
478471	RESISTOR FXD 1/4W 2-5% 470 OHM	2
478473	RESISTOR FXD 1/4W 2-5% 47 K	1
481001	DIODE SIGNAL 1N4148	1
482003	DIODE ZENER 12.0V 10% 400MW 1N759	3
482018	DIODE MOTOROLA 1N4935, VARO TG4	4
482019	DIODE MOTOROLA 1N5823, VARO VSK520	1
483007	RECTIFIER MOTOROLA MR500, VARO V330	2
485006	TRANSISTOR SS NPN PN-2222	2
487009	TRANSISTOR PWR MOS IRF531 OR UFN531	1
561023	POWER XFMR 30 KHZ 8103-TI INCON	1
651869	XPANDER POWER SUP PCB ART 1870-1871	1
750182-0	CABLE SUB-ASSY OB-XPANDER #1	1
211072	CONN 8 CKT M W/ EARS AMP1-480283-0	1
930070	PRCHD OUTSD LABOR XPANDER CABLE #1	1
750183-0	CABLE SUB-ASSY OB-XPANDER #2	1
211072	CONN 8 CKT M W/ EARS AMP1-480283-0	1
930071	PRCHD OUTSD LABOR XPANDER CABLE #2	1
750184-0	CABLE SUB-ASSY OB-XPANDER #3	1
211072	CONN 8 CKT M W/ EARS AMP1-480283-0	1

ENGINEERING CHANGE ORDER

PRODUCT AFFECTED:	DRAWINGS AFFECTED:	ECO NO.
XPANDER	XPANDER POT BOARD SCHEMATIC 1859 SHEET 1 OF 2	601

EFFECTIVITY:

- ☐ AS REQUIRED IN TEST
- ☐ FUTURE PRODUCTION
- ☒ RETROFIT PRODUCTION AND INVENTORY
- ☐ RETROFIT IN FIELD ☐ AS NEEDED
- ☐ DRAWING CORRECTED ONLY
- ☐ _____

REASON FOR CHANGE:

TO ALLOW PEDAL INPUTS TO BE SET AT MAXIMUM WHEN THE PEDAL JACKS ARE NOT PLUGGED IN.

WRITTEN BY:	DATE:	APPROVED BY:	DATE:
MARCUS	6/6/84		6/6/84

DESCRIPTION OF CHANGE:

REMOVE 2 47K RESISTORS (OB. No. 478473) ON POT BOARD (ASSY. No. 720091), LOCATED AT R75 AND R76.

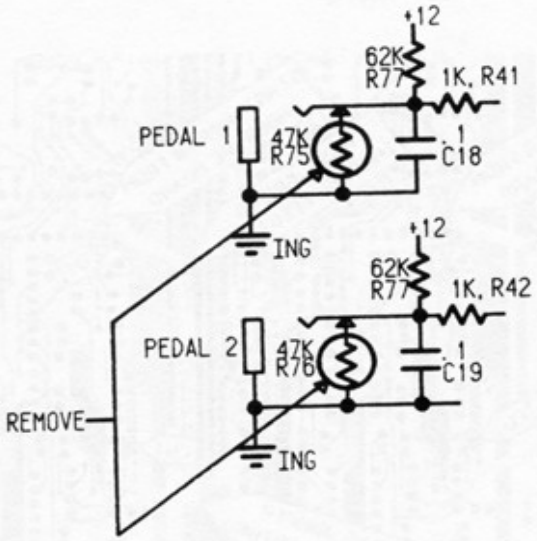

ENGINEERING CHANGE ORDER

PRODUCT EFFECTED	DRAWINGS EFFECTED	ECO NO.
XPANDER	VOICE SCHEMATIC 1814 SHEET 3, 4 VOICE PARTS LAYOUT 1813B	602 PAGE 1 OF 2

EFFECTIVITY:

- ☐ AS REQUIRED IN TEST
- ☒ FUTURE PRODUCTION
- ☐ RETROFIT PRODUCTION AND INVENTORY
- ☐ RETROFIT IN FIELD ☐ AS NEEDED
- ☐ DRAWING CORRECTED ONLY
- ☐ _____

REASON FOR CHANGE:

REMOVE DISTORTION IN VOICE'S FINAL VCA, AND DECREASE VCA BYPASSING.

WRITTEN BY:	DATE:	APPROVED BY:	DATE:
MICHEL DOIDIC	6/29/84		6/29/84

DESCRIPTION OF CHANGE:

1. CLEAN ANY SOLDER FROM WITHIN SELECTED FEEDTHRUS ON ALL SIX VOICES.
2. MAKE 12 CUTS AS SHOWN TO MOVE TRACE FROM ORIGINAL POSITION.
3. FROM BACK OF BOARD SOLDER JUMPER TO FEEDTHRU, THEN ROUTE AS SHOWN.
4. SOLDER OTHER END OF JUMPER TO BACK SIDE OF BOARD.

--SEE PAGE 2--

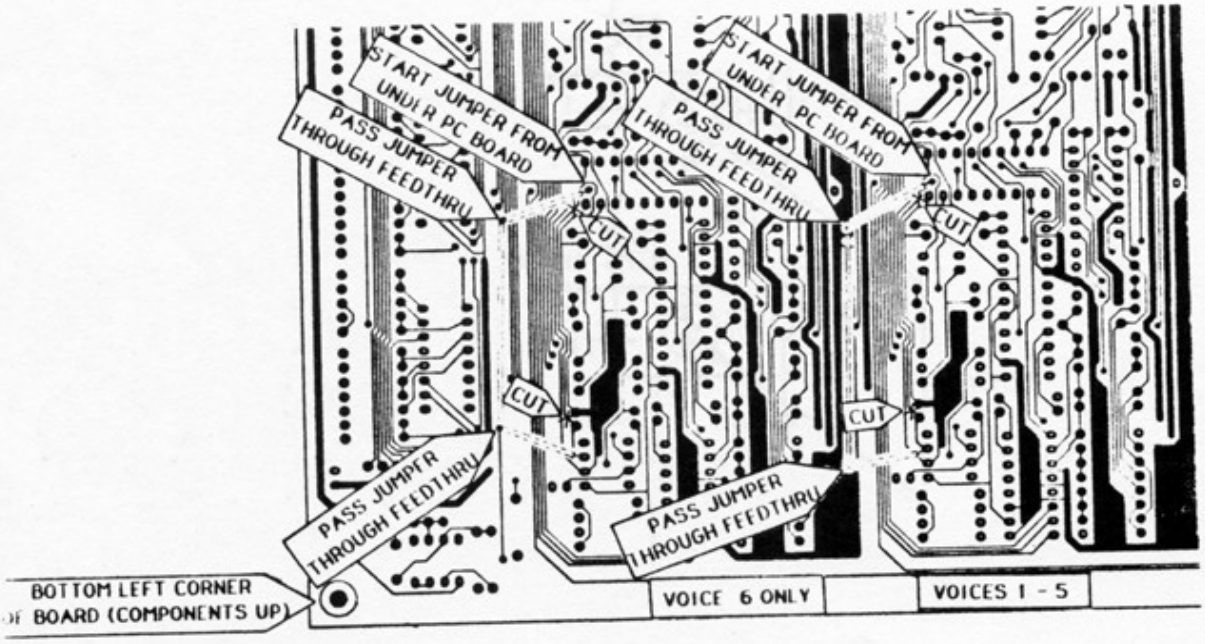

OBERHEIM ELECTRONICS, INC.
2250 South Barrington Avenue, Los Angeles, California (213)473 -8574

ENGINEERING CHANGE ORDER

PRODUCT EFFECTED	DRAWINGS EFFECTED	ECO NO.
XPANDER	VOICE SCHEMATIC 1814 SHEET 3, 4 VOICE PARTS LAYOUT 1813B	602 PAGE 2 OF 2

EFFECTIVITY:

- ☐ AS REQUIRED IN TEST
- ☒ FUTURE PRODUCTION
- ☐ RETROFIT PRODUCTION AND INVENTORY
- ☐ RETROFIT IN FIELD ☐ AS NEEDED
- ☐ DRAWING CORRECTED ONLY
- ☐ _____

REASON FOR CHANGE:

REMOVE DISTORTION IN VOICE'S FINAL VCA, AND DECREASE VCA BYPASSING.

WRITTEN BY:	DATE:	APPROVED BY:	DATE:
MICHEL DOIDIC	6/29/84		

DESCRIPTION OF CHANGE:

6. REMOVE 12 10K RESISTORS (RX62 AND RX70) AND REPLACE WITH 33K RESISTORS (478333).
7. REMOVE 10K RESISTOR (R186) AND REPLACE WITH 4.7K RESISTOR (478472) IN NEW POSITION AS SHOWN.

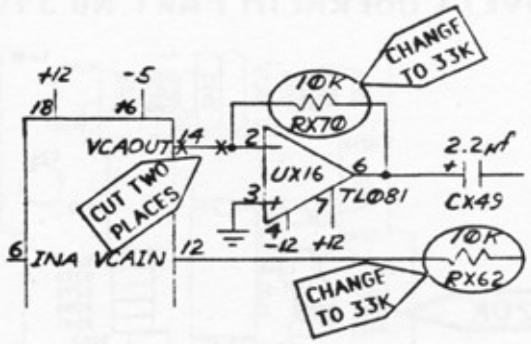

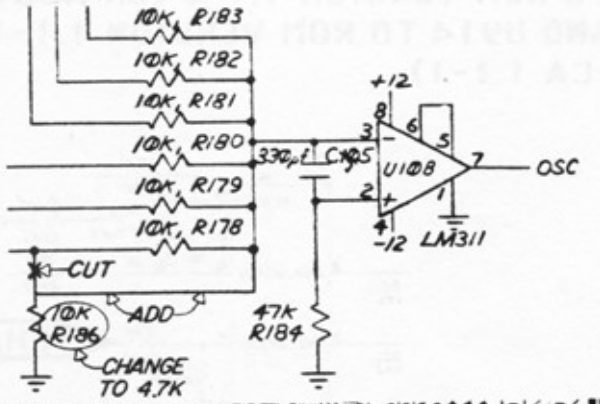

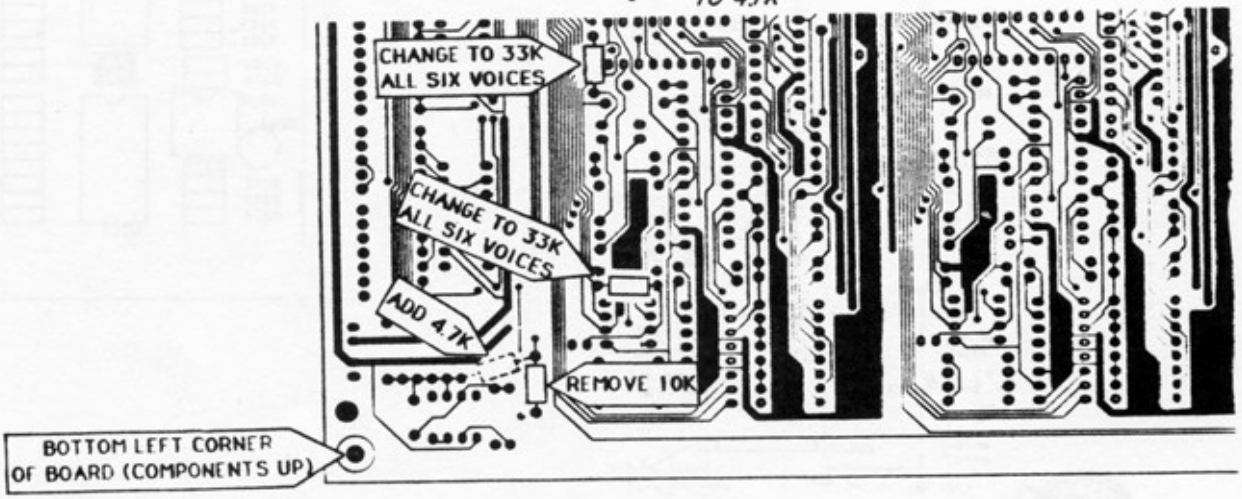

OBERHEIM ELECTRONICS, INC.
2250 South Barrington Avenue, Los Angeles, California (213)473-8574

ENGINEERING CHANGE ORDER

PRODUCT AFFECTED	DRAWINGS AFFECTED	ECO No
XPANDER	VOICE SCHEMATIC 1841 SHEET 1 AND 3 OF 4 AND PARTS LAYOUT 1813B	603

AFFECTIVITY:

- ☐ AS REQUIRED IN TEST
- ☒ FUTURE PRODUCTION
- ☐ RETROFIT PRODUCTION & INVENTORY
- ☐ RETROFIT IN FIELD ☐ AS NEEDED
- ☐ DRAWING CORRECTION ONLY
- ☐ _____

REASON FOR CHANGE:

- MAKES FILTER OSCILLATION MORE RELIABLE.
- ALLOWS USE OF ANY BRAND OF 4053 (UX14).
- MAKES FILTER OSCILLATION BREAK POINT MORE ACCURATE.

WRITTEN BY:	DATE:	APPROVED BY:	DATE:
MICHEL DOIDIC	7/30/84		7/30/84

DESCRIPTION OF CHANGE:

- CHANGE RX64 RESISTOR ON ALL 6 VOICES FROM A 27K 5% TO A 20K 5% (OBERHEIM No.478203).
- INSTALL VOICE SOFTWARE VERSION 1.1 (OR ABOVE) BY CHANGING U912 TO ROM VERSION 1.1-0 (OR ABOVE) (OBERHEIM PART No.310007-CA1.1-0) AND U914 TO ROM VERSION 1.1-1 (OR ABOVE) (OBERHEIM PART No.31000 -CA 1.1-1).

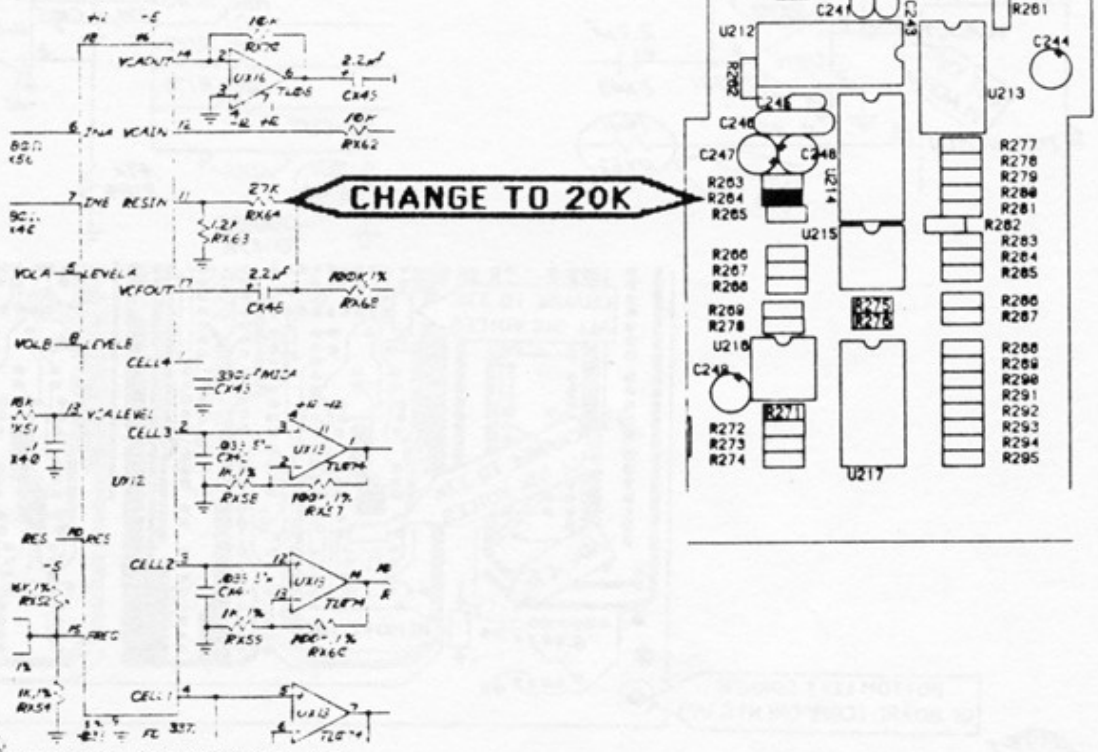

OBERHEIM ELECTRONICS, INC.
2250 South Barrington Avenue, Los Angeles, California 90064, (213)473-6574

ENGINEERING CHANGE ORDER

PRODUCT AFFECTED:	DRAWINGS AFFECTED:	ECO No.
XPANDER	POT BOARD SCHEMATIC 1859 SHEET 1 OF 2 AND PARTS LAYOUT 1866D	604

AFFECTIVITY:

- ☐ AS REQUIRED IN TEST
- ☒ FUTURE PRODUCTION
- ☐ RETROFIT PRODUCTION & INVENTORY
- ☒ RETROFIT IN FIELD ☒ AS NEEDED
- ☐ DRAWING CORRECTION ONLY
- ☐ _____

REASON FOR CHANGE:

IMPROVE ADC STABILITY AND EXTEND USEFUL RANGE OF ADC TRIMMER T1.

WRITTEN BY:	DATE:	APPROVED BY:	DATE:
MICHEL DOIDIC	8-3-84		8-3-84

DESCRIPTION OF CHANGE:

1. FILTER ADC'S (U20) +5 VOLT SUPPLY BY ADDING A ~~47uf~~ • 1 ufd mylar ECO#613 @ 50v (08.151031) BETWEEN THE INPUT GROUND (ING) AND +5v.

~~2. CHANGE R47 FORM 12.1K 1% TO 11.3K1% (08.475407).~~

~~3. CHANGE R48 FROM 15K 5% TO 82K 5% (08.478823)~~ Canceled by ECO#610

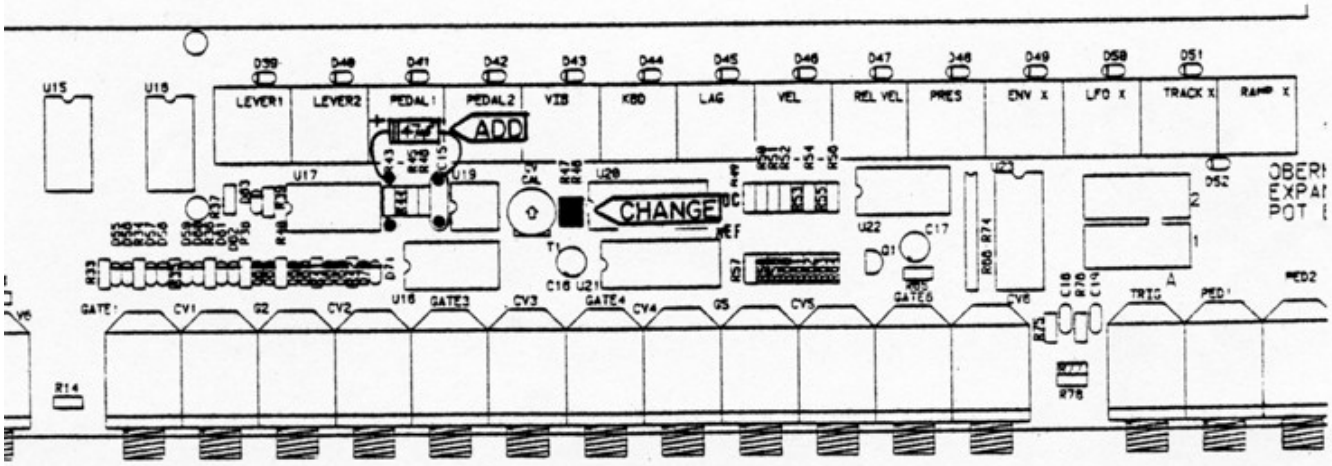

OBERHEIM ELECTRONICS, INC.
2250 South Barrington Avenue, Los Angeles, California 90064, (213)473-6574

ENGINEERING CHANGE ORDER

PRODUCT AFFECTED:	DRAWINGS AFFECTED:	ECO No.
XPANDER	VOICE SCHEMATIC 1808 SHEET 2 AND 3 OF 4.	605

AFFECTIVITY:

- ☐ AS REQUIRED IN TEST
- ☒ FUTURE PRODUCTION
- ☐ RETROFIT PRODUCTION & INVENTORY
- ☒ RETROFIT IN FIELD ☒ AS NEEDED
- ☐ DRAWING CORRECTION ONLY
- ☐ _____

REASON FOR CHANGE:

AVOID VOICES 5 AND 6 FROM GOING SHARP.

WRITTEN BY:	DATE:	APPROVED BY:	DATE:
MICHEL DOIDIC	8-3-84	JEQ	8-3-84

DESCRIPTION OF CHANGE:

DOUBLE CONNECTION BETWEEN PIN 6 OF U813 (DAC OUTPUT) AND PIN 3 OF U206 (S&H OF VOICE 6) WITH A JUMPER.

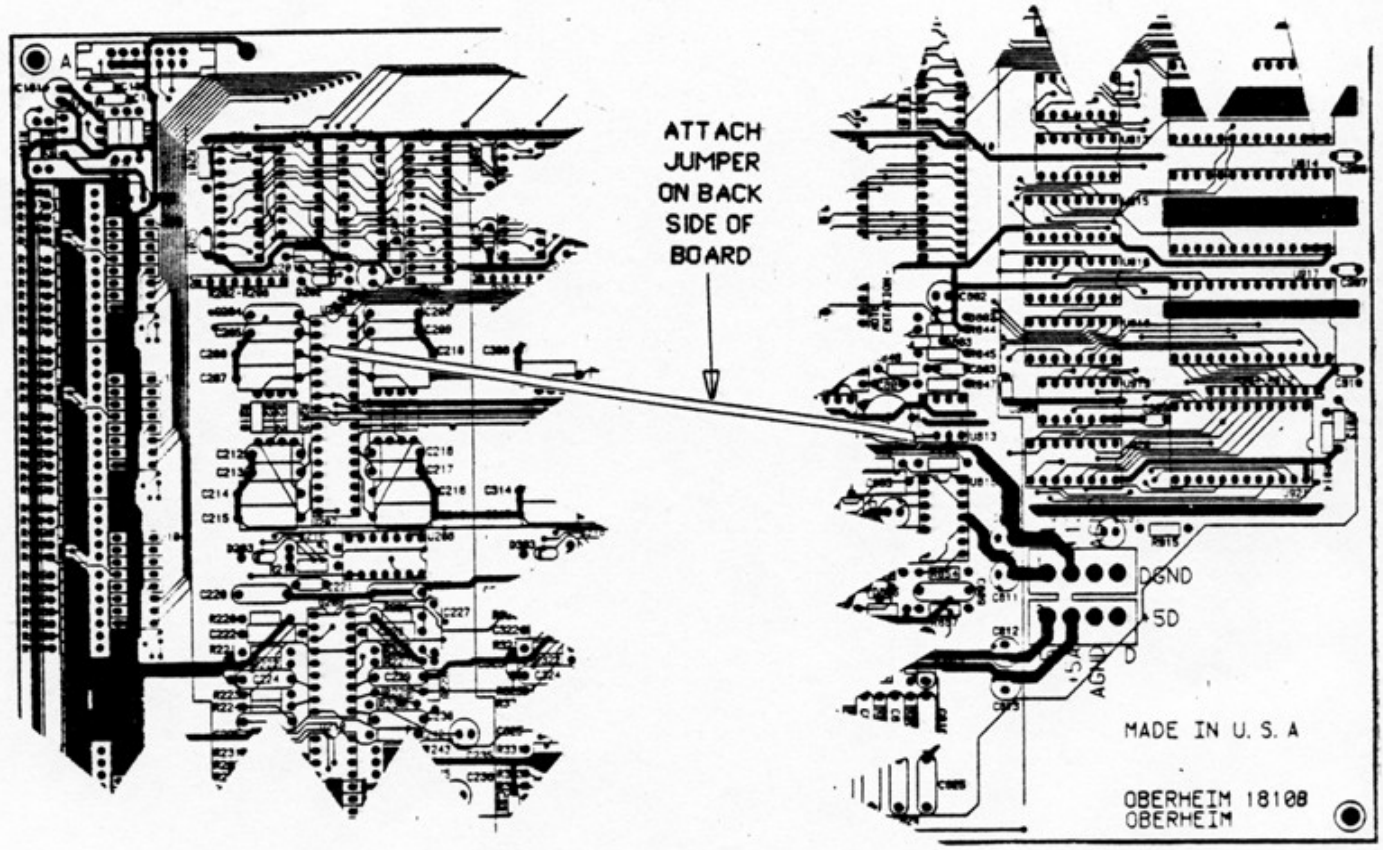

OBERHEIM ELECTRONICS, INC
2250 South Barrington Avenue, Los Angeles, California 90064, (213)473-6574

ENGINEERING CHANGE ORDER

PRODUCT AFFECTED:	DRAWINGS AFFECTED:	ECO No.
XPANDER	VOICE BOARD SCHEMATIC 1808 SHEET 3 OF 4 AND PARTS LAYOUT 1813B	606

AFFECTIVITY:

- ☐ AS REQUIRED IN TEST
- ☒ FUTURE PRODUCTION
- ☐ RETROFIT PRODUCTION & INVENTORY
- ☒ RETROFIT IN FIELD ☒ AS NEEDED
- ☐ DRAWING CORRECTION ONLY
- ☐ _____

REASON FOR CHANGE:

AVOID SPURIOUS FREQUENCY GLITCHES ON VCO2 OF VOICE 5 AND 6

WRITTEN BY:	DATE:	APPROVED BY:	DATE:
MICHEL DOIDIC	8-3-84		8-3-84

DESCRIPTION OF CHANGE:

FILTER +5v DC BY ADDING A .1 CAPACITOR (08.153013) ACROSS SUPPLY OF U204.

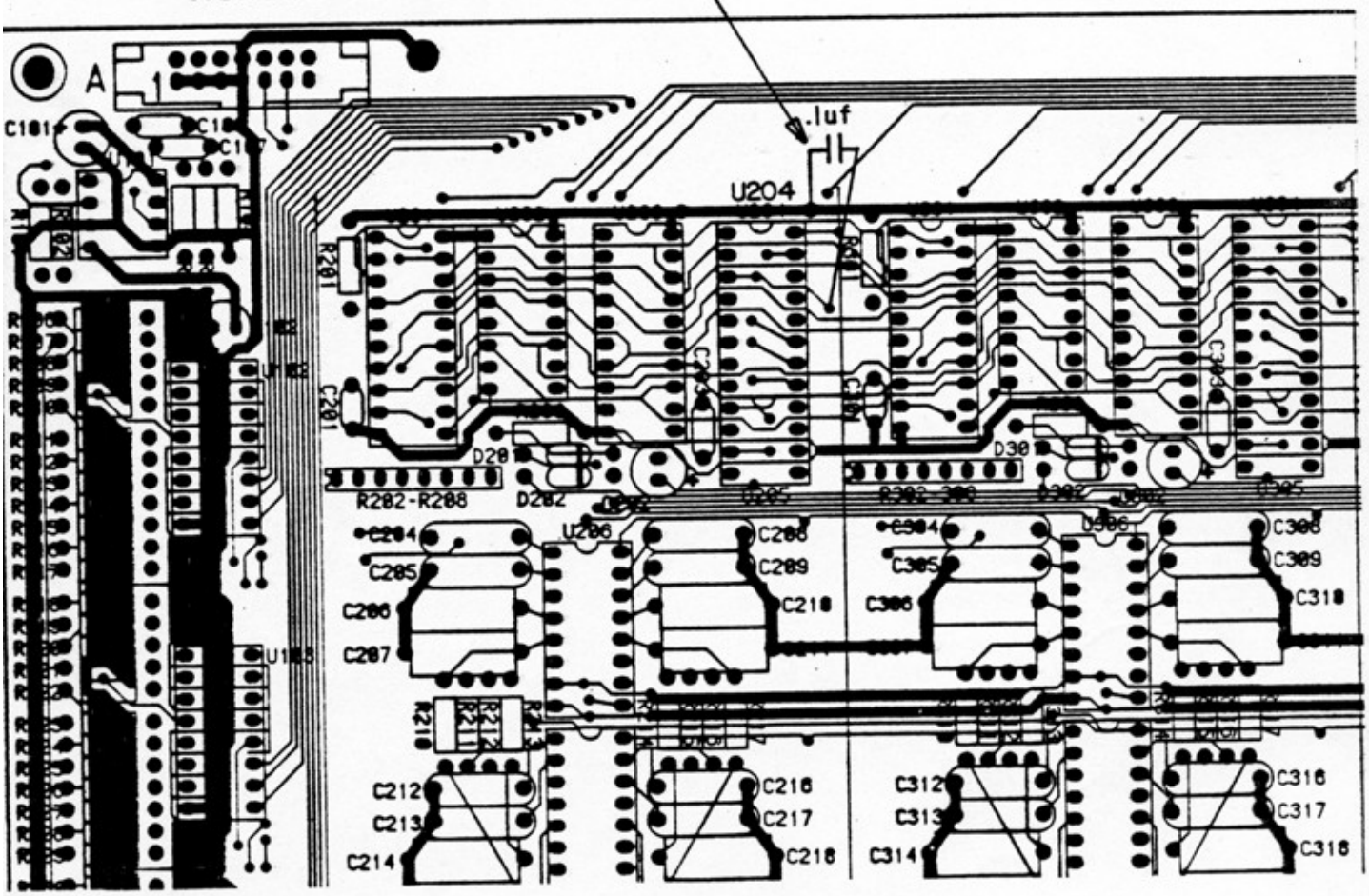

OBERHEIM ELECTRONICS, INC.
2250 South Barrington Avenue, Los Angeles, California 90064, (213)473-6574

ENGINEERING CHANGE ORDER

PRODUCT AFFECTED:	DRAWINGS AFFECTED:	ECO No.
XPANDER	POT BOARD SCHEMATIC 1859 SHEET 1 OF 2	607

AFFECTIVITY:

- ☐ AS REQUIRED IN TEST
- ☒ FUTURE PRODUCTION
- ☐ RETROFIT PRODUCTION & INVENTORY
- ☒ RETROFIT IN FIELD ☒ AS NEEDED
- ☐ DRAWING CORRECTION ONLY
- ☐ _____

REASON FOR CHANGE:

AVOID MISSING TRIGGER WHEN SHORT POSITIVE PULSES (LESS THAN 10 ms) ARE USED AS TRIGGER CONTROL.

WRITTEN BY:	DATE:	APPROVED BY:	DATE:
MICHEL DOIDIC	7-9-84		7-9-84

DESCRIPTION OF CHANGE:

CHANGE RESISTOR BETWEEN C17 AND +5 FROM 100K TO 220K. (MOUNTED ON REAR OF BOARD.)

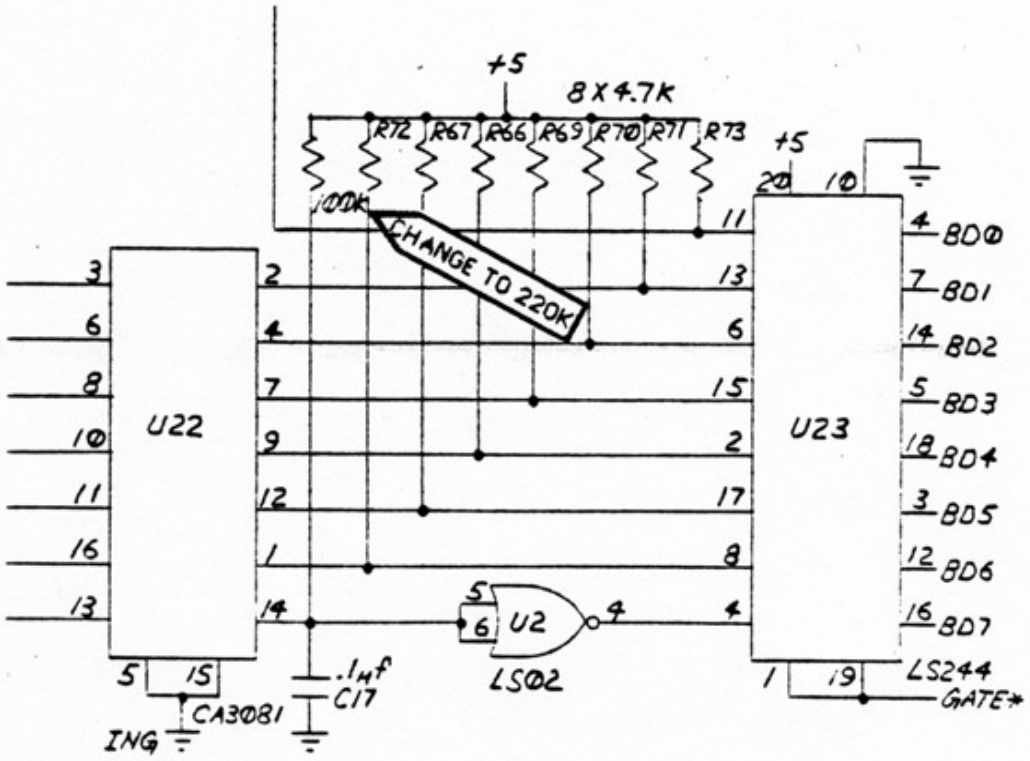

OBERHEIM ELECTRONICS, INC.
2250 South Barrington Avenue, Los Angeles, California 90064, (213)473-6574

ENGINEERING CHANGE ORDER

PRODUCT AFFECTED:	DRAWINGS AFFECTED:	ECO No.
XPANDER (ASSY.720090)	POWER SUPPLY SCHEMATIC 1869	608

AFFECTIVITY:

- ☐ AS REQUIRED IN TEST
- ☐ FUTURE PRODUCTION
- ☒ RETROFIT PRODUCTION & INVENTORY
- ☒ RETROFIT IN FIELD ☐ AS NEEDED
- ☐ DRAWING CORRECTION ONLY
- ☐ _____

REASON FOR CHANGE:

TO IMPROVE STABILITY OF POWER SUPPLY'S FEED BACK CIRCUIT.

WRITTEN BY:	DATE:	APPROVED BY:	DATE:
PETE MUNSON	8-15-84		8-15-84

DESCRIPTION OF CHANGE:

CHANGE R8 FROM 3.9K (08.478392) TO 1.5K (08.478152)
CHANGE R23 FROM 47K (08.478473) TO 22K (08.478223)
CHANGE C12 FROM .047uf (08.153008) TO .47uf (08.153009)

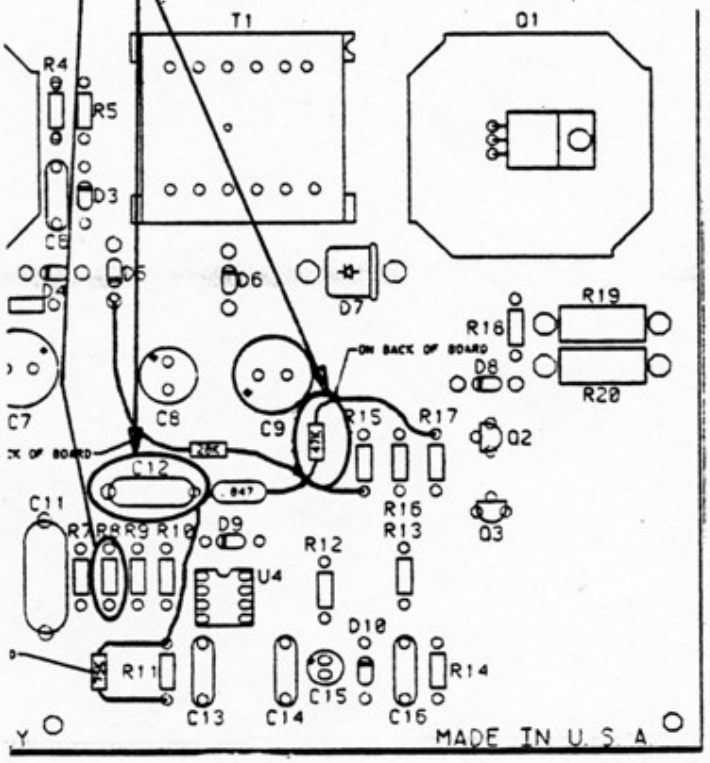

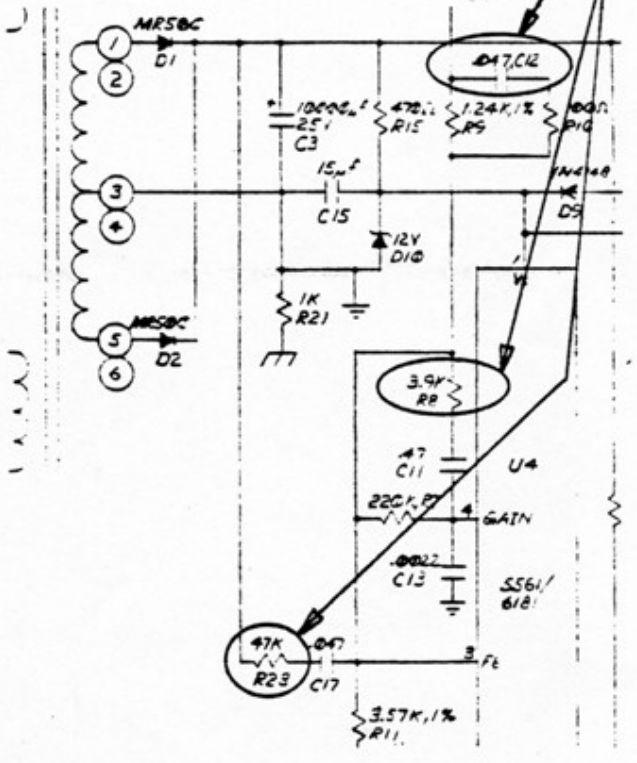

OBERHEIM ELECTRONICS, INC.
2250 South Barrington Avenue, Los Angeles, California 90064, (213)473-6574

ENGINEERING CHANGE ORDER

PRODUCT AFFECTED:	DRAWINGS AFFECTED:	ECO No.
XPANDER ASSY.720085	VOICE BOARD SCHEMATIC 1808 SHEET 2 OF 4 AND PARTS LAYOUT 1813B	609

AFFECTIVITY:

- ☐ AS REQUIRED IN TEST
- ☒ FUTURE PRODUCTION
- ☐ RETROFIT PRODUCTION & INVENTORY
- ☒ RETROFIT IN FIELD ☒ AS NEEDED
- ☐ DRAWING CORRECTION ONLY
- ☐ _____

REASON FOR CHANGE:

TO AVOID SPURIOUS PULSE WIDTH TUNING FAILURES.
AND TO DECREASE BLEEDING OF VCA 1 AND 2 (VCO'S VCAS).

WRITTEN BY:	DATE:	APPROVED BY:	DATE:
MICHEL DOIDIC	8/22/84	JEO	

DESCRIPTION OF CHANGE:

1. INSTALL VOICE SOFTWARE VERSION 1.2 BY REPLACING U912 WITH ROM CA-1.2-0 (OR ABOVE) (08.310007-CA-1.2-0) AND U914 WITH ROM CA-1.2-1 (OR ABOVE) (08.310007-CA-1.2-1) ON THE VOICE BOARD.
2. ADD A 422K 1% RESISTOR (08.475559) BETWEEN PIN 2 OF U813 AND PIN 7 OF U815 IN THE DAC AREA.

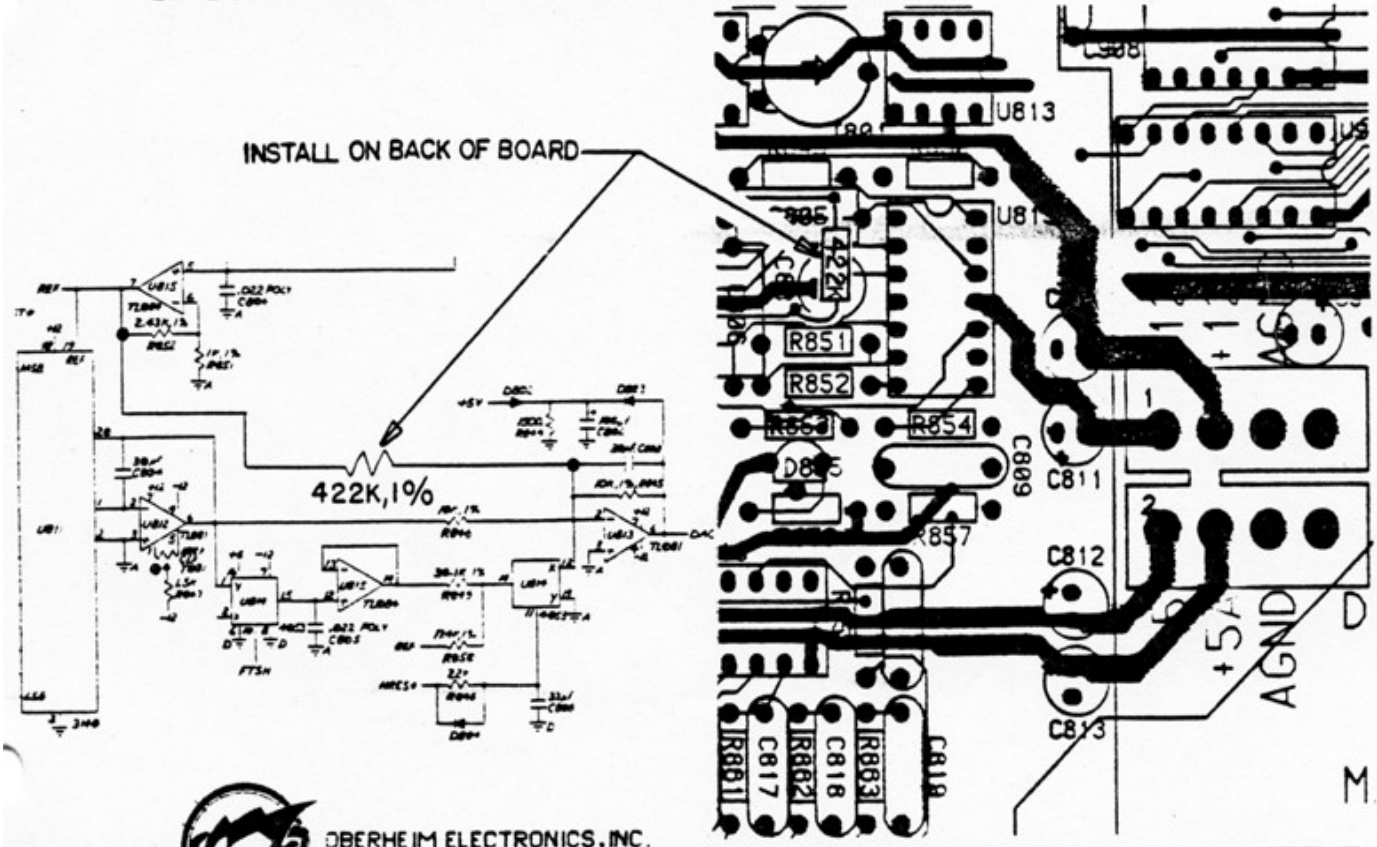

OBERHEIM ELECTRONICS, INC.
2250 South Barrington Avenue, Los Angeles, California 90064, (213)473-6574

ENGINEERING CHANGE ORDER

PRODUCT AFFECTED:	DRAWINGS AFFECTED:	ECO No..
XPANDER **ASSY. No. 720091**	**POT BOARD** **SCHEMATIC 1859 SHEET 1 OF 2** **AND PARTS LAYOUT 1866D**	610

AFFECTIVITY:

- ☐ AS REQUIRED IN TEST
- ☒ FUTURE PRODUCTION
- ☐ RETROFIT PRODUCTION & INVENTORY
- ☒ RETROFIT IN FIELD ☒ AS NEEDED
- ☐ DRAWING CORRECTION ONLY
- ☐ _____

REASON FOR CHANGE:

CANCEL ITEMS TWO AND THREE OF ECO 604.

WRITTEN BY:	DATE:	APPROVED BY:	DATE:
MICHEL DOIDIC	**8-3-84**		8-3-84

DESCRIPTION OF CHANGE:

1. **CHANGE R47 FROM 11.3K 1% TO 12.1K 1% (08.475410).**
2. **CHANGE R48 FROM 82K 5% TO 15K 5% (08.478153).**

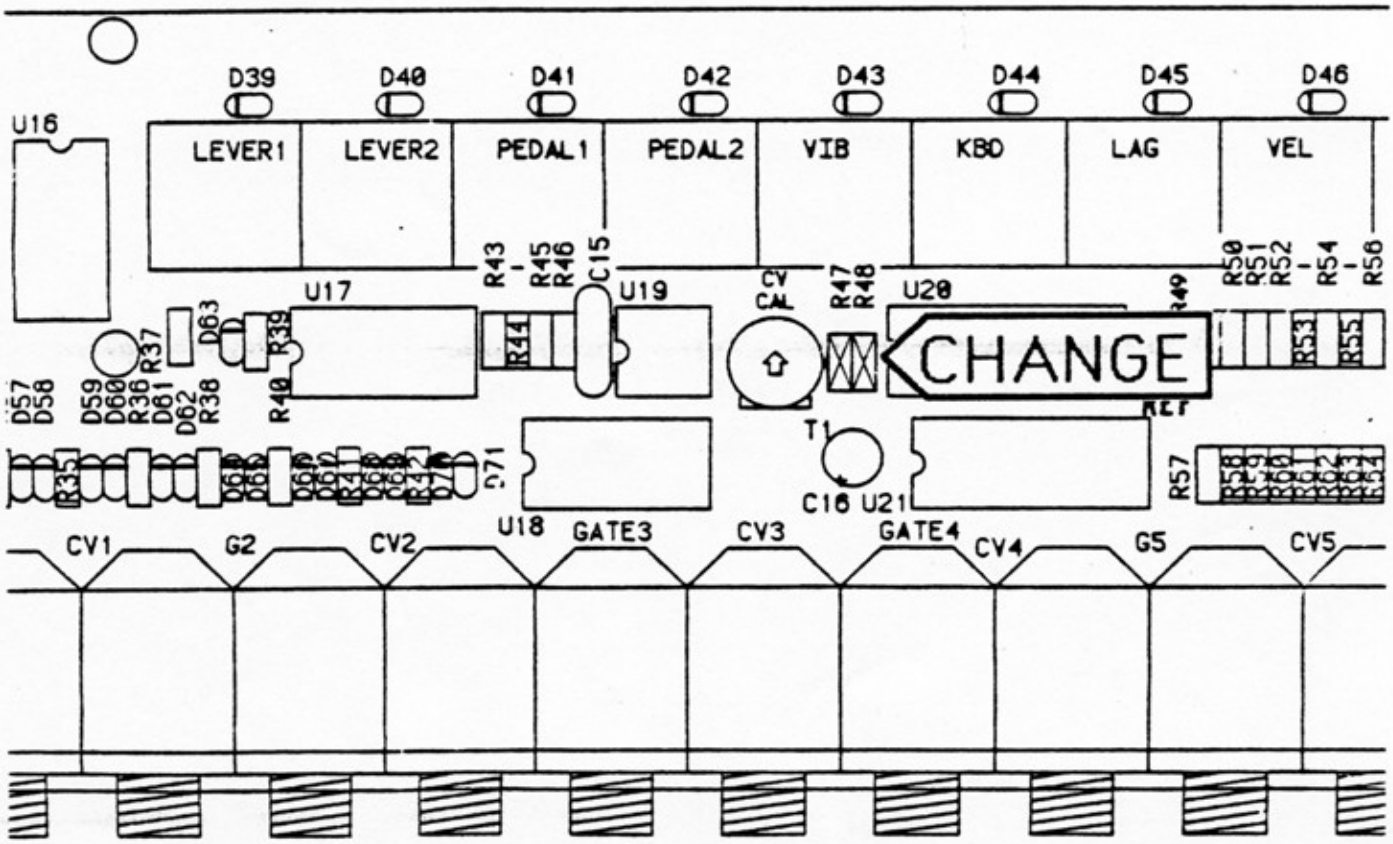

OBERHEIM ELECTRONICS, INC.
2250 South Barrington Avenue, Los Angeles, California 90064, (213)473-6574

ENGINEERING CHANGE ORDER

PRODUCT AFFECTED:	DRAWINGS AFFECTED:	ECO No.
XPANDER ASSY No.720091	POT BOARD SCHEMATIC 1859 SHEET 1 OF 2 AND PARTS LAYOUT 1866D	611

AFFECTIVITY:

- ☐ AS REQUIRED IN TEST
- ☒ FUTURE PRODUCTION
- ☐ RETROFIT PRODUCTION & INVENTORY
- ☒ RETROFIT IN FIELD ☐ AS NEEDED
- ☐ DRAWING CORRECTION ONLY
- ☐ _____

REASON FOR CHANGE:

IMPROVE PROTECTION OF ADC'S (U20) ANALOG INPUT.

WRITTEN BY:	DATE:	APPROVED BY:	DATE:
MICHEL DOIDIC	8/30/84		8/30/84

DESCRIPTION OF CHANGE:

ADD TWO 1N4148 DIODES (OB.480001) ON THE ANALOG INPUT OF ADC (U20).

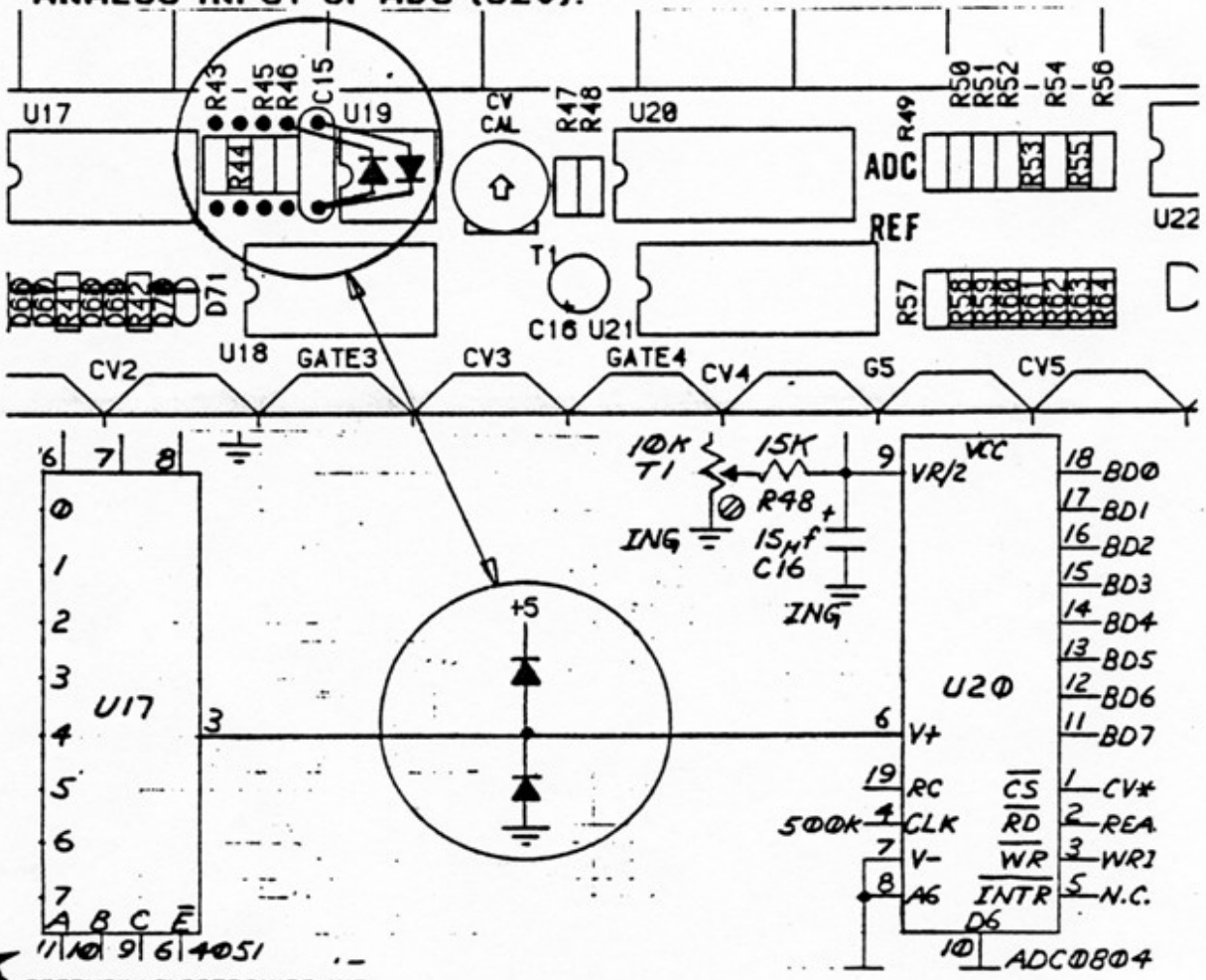

OBERHEIM ELECTRONICS, INC.
2250 South Barrington Avenue, Los Angeles, California 90064, (213)473-6574

ENGINEERING CHANGE ORDER

PRODUCT AFFECTED:	DRAWINGS AFFECTED:	ECO No.
XPANDER ASSY No.720091	POT BOARD SCHEMATIC 1859 SHEET 1 OR 2 AND PARTS LAYOUT 1866D	612

AFFECTIVITY:

- ☐ AS REQUIRED IN TEST
- ☒ FUTURE PRODUCTION
- ☐ RETROFIT PRODUCTION & INVENTORY
- ☒ RETROFIT IN FIELD ☒ AS NEEDED
- ☐ DRAWING CORRECTION ONLY
- ☐ _____

REASON FOR CHANGE:

See 615.

IMPROVE ADC STABILITY

WRITTEN BY:	DATE:	APPROVED BY:	DATE:
MICHEL DOIDIC	8/30/84		8/30/84

DESCRIPTION OF CHANGE:

ADD A .001uf (OB.153015) (IN C15 LOCATION) BETWEEN GROUND AND ANALOG INPUT OF ADC (U20).

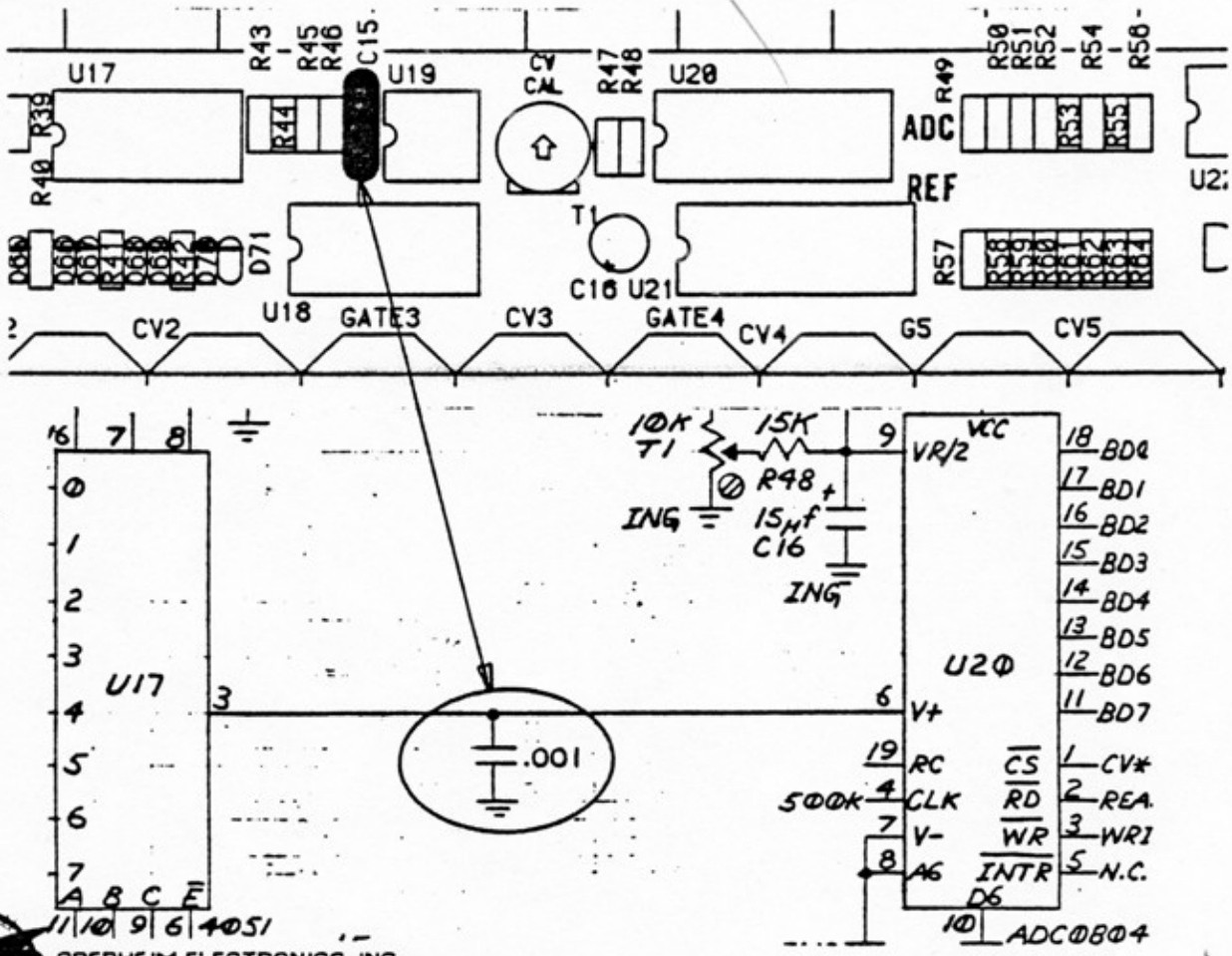

OBERHEIM ELECTRONICS, INC.
2250 South Barrington Avenue, Los Angeles, California 90064, (213)473-6574

ENGINEERING CHANGE ORDER

PRODUCT AFFECTED:	DRAWINGS AFFECTED:	ECO No.
XPANDER ASSY No.720091	POT BOARD SCHEMATIC 1859 SHEET 1 OF 2 AND PARTS LAYOUT 1866D	613

AFFECTIVITY:

- ☐ AS REQUIRED IN TEST
- ☒ FUTURE PRODUCTION
- ☐ RETROFIT PRODUCTION & INVENTORY
- ☒ RETROFIT IN FIELD ☒ AS NEEDED
- ☐ DRAWING CORRECTION ONLY
- ☐ _____

REASON FOR CHANGE:

REMOVE GROUND LOOP NOISE FROM AUDIO OUTPUT.

WRITTEN BY:	DATE:	APPROVED BY:	DATE:
MICHEL DOIDIC	9/4/84	[signature]	9/4/84

DESCRIPTION OF CHANGE:

CHANGE VALUE OF CAPACITOR ADDED IN ECO 604 FROM 47uf TO .1uf MYLAR (08.153013).

OBERHEIM ELECTRONICS, INC.
2250 South Barrington Avenue, Los Angeles, California 90064, (213)473-6574

ENGINEERING CHANGE ORDER

PRODUCT AFFECTED:	DRAWINGS AFFFCTED	ECO No.
XPANDER (ASSY.720085)	SCHEMATIC 1808 SHEET 3 OF 4 AND PARTS LAYOUT 1813B.	614

AFFECTIVITY:

- ☐ AS REQUIRED IN TEST
- ☒ FUTURE PRODUCTION
- ☐ RETROFIT PRODUCTION & INVENTORY
- ☒ RETROFIT IN FIELD ☒ AS NEEDED
- ☐ DRAWING CORRECTION ONLY
- ☐ _____

REASON FOR CHANGE:

AVOID EXCESSIVE BEATING BETWEEN VCO 1 AND 2 OF VOICE 6.

WRITTEN BY:	DATE:	APPROVED BY:	DATE:
MICHEL DOIDIC	9/17/84		9/17/84

DESCRIPTION OF CHANGE:

ADD A .1uf CAP (OB.153013) BETWEEN PIN 3 OF U205 (GROUND) AND PIN 8 OF U205 (+12) ON BACK OF BOARD.
NOTE- USE THE EXACT LOCATION SHOWN BY THE DRAWING BELOW.

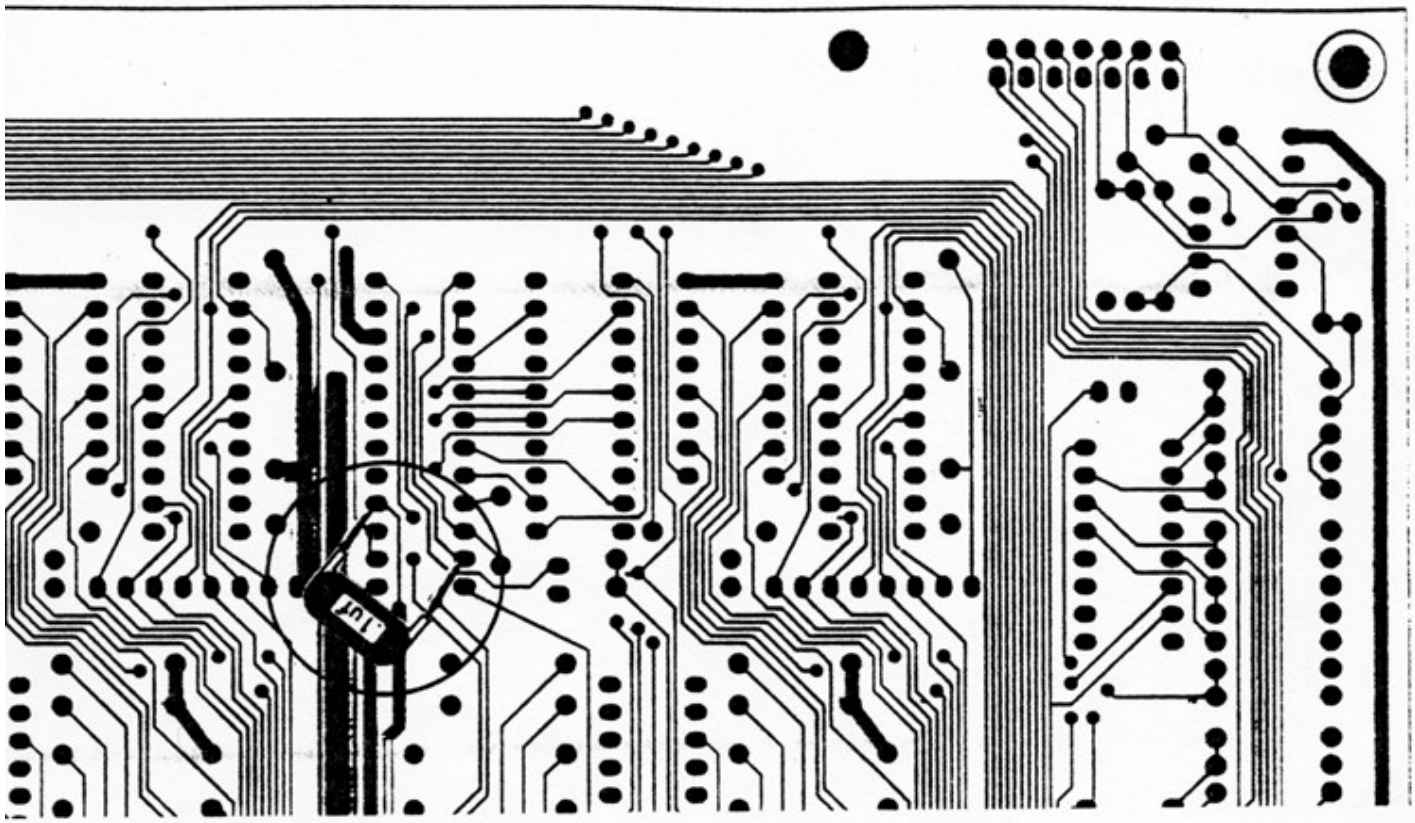

OBERHEIM ELECTRONICS, INC.
2250 South Barrington Avenue, Los Angeles, California 90064, (213)473-6574

ENGINEERING CHANGE ORDER

PRODUCT AFFECTED	DRAWINGS AFFECTED	ECO No
XPANDER ASSY No. 720091	POT BOARD SCHEMATIC 1859 SHEET 1 OR 2 AND PARTS LAYOUT 1866D	615

AFFECTIVITY.

- ☐ AS REQUIRED IN TEST
- ☒ FUTURE PRODUCTION
- ☐ RETROFIT PRODUCTION & INVENTORY
- ☒ RETROFIT IN FIELD ☒ AS NEEDED
- ☐ DRAWING CORRECTION ONLY
- ☐ _____

REASON FOR CHANGE

AVOID INTERACTION BETWEEN PEDAL 1 AND 2 CV INPUTS.

WRITTEN BY:	DATE	APPROVED BY	DATE:
MICHEL DOIDIC	10-1-84	EO	10-1-84

DESCRIPTION OF CHANGE

REMOVE CAP ADDED IN ECO 612.

OBERHEIM ELECTRONICS, INC.
2250 South Barrington Avenue, Los Angeles, California 90064, (213)473-6574