THIS DOCUMENT CONTAINS PROPRIETARY INFORMATION WHICH IS THE PROPERTY OF QSC AUDIO PRODUCTS, THAT MAY NOT BE DISCLOSED, REPRODUCED OR USED WITHOUT EXPRESS WRITTEN CONSENT FROM QSC AUDIO PRODUCTS.

REVISIONS

ZONE	REV	DESCRIPTION	DATE	APPROVED
	A	PROD RELEASE PER ECO 2349	6-29-94	

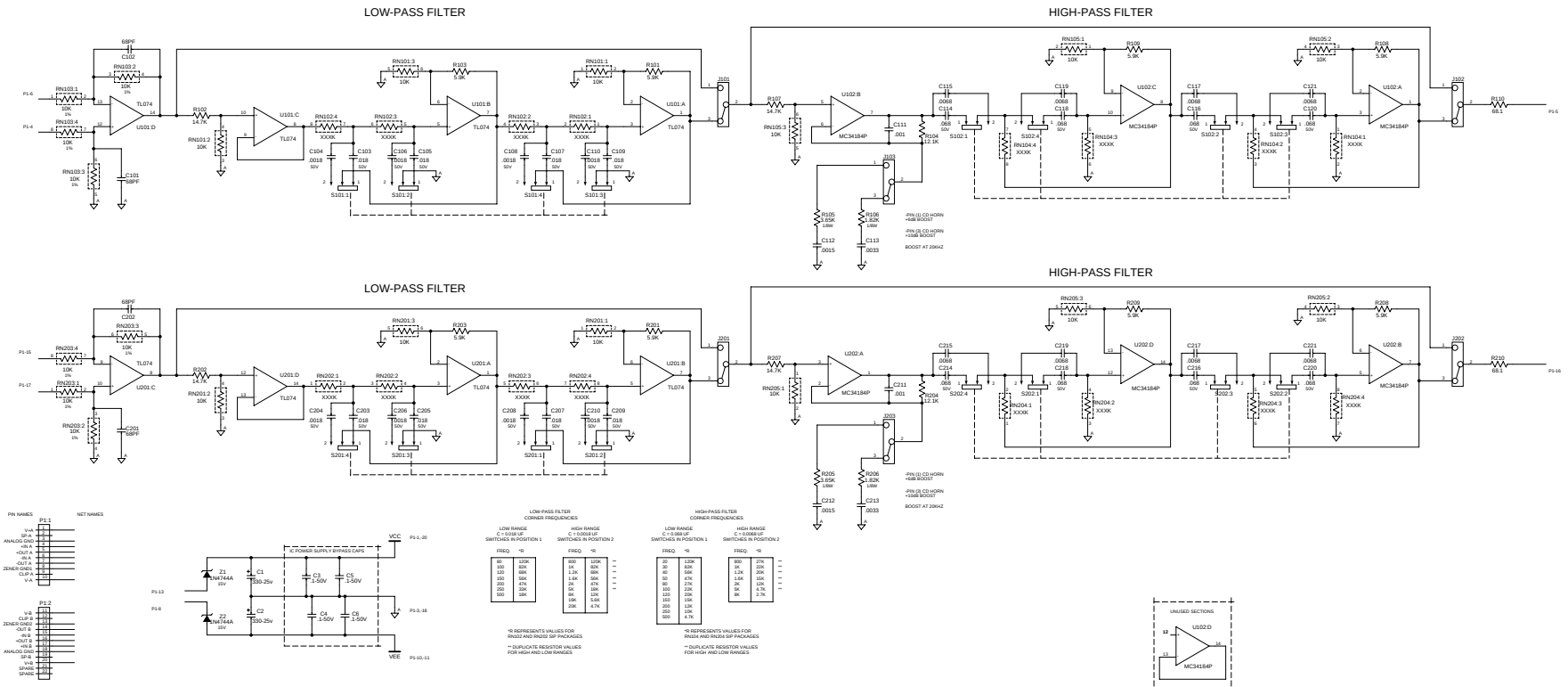

POWER PIN IDENTIFICATION			
REF DES	PART/ PACKAGE	+15 VDC	-15V VDC
U101, U102 U201, U202	14 PIN DIP	4	11

8. SWITCHES S101, S102, S201 AND S202 SHOWN IN LOW RANGE POSITION.
7. PARTS IN COMMOM TO BOTH CHANNELS NUMBERED 1-99.
6. CH 2 COMPONENTS NUMBERED 201-299.
5. CH 1 COMPONENTS NUMBERED 101-199.
4. ALL RESISTOR NETWORKS +/- 2%.
3. ALL CAPACITOR VALUES IN MICROFARADS, 100V.
2. ALL RESISTOR VALUES ARE IN OHMS, +/-1%, 1/4 WATT.
1. THIS DRAWING USED IN CONJUNCTION WITH PCB ASSEMBLY WP-004031-00.

NOTES: UNLESS OTHERWISE SPECIFIED

9. FACTORY SET CONFIGURATION:
INSTALLED RESISTOR NETWORKS ARE RN102:68K (1.2KHz), RN104:120K (20Hz),RN202:4.7K (20KHz) AND RN204:20K(1.2KHz). SWITCHES S101, S201 AND S202 ARE IN HIGH RANGE POSITION 2 AND S102 IN LOW RANGE POSITION 1. SHUNT JUMPERS ARE IN BYPASS MODE AND 6dB HORN BOOST POSITIONS.

Z2	
U102, U202	
S102, S202	
RN105,RN205	
R110, R210	
P1	
J103, J203	
C121, C221	C7-C100
LAST USED	NOT USED
REFERENCE DESIGNATION	

NEXT ASSY	USED ON
APPLICATION	

QTY	ITEM NO.	PART NO.	DESCRIPTION	VENDOR

PARTS LIST

UNLESS OTHERWISE SPECIFIED
DIMENSIONS ARE IN INCHES.
DIMENSIONS PER ANSI Y14.5-1982
TOLERANCES ARE:
DECIMALS .XX ± DECIMALS .XXX ± ANGLES ±°
DEBURR EDGES .XXX R MAX
MATERIAL
FINISH
DO NOT SCALE DRAWING

CONTRACT NO.

APPROVALS	DATE
DRAWN B. LILLEMOEN	5-9-94
CHECKED	
ISSUED	
CAD SEED FILE NO.	

QSC AUDIO PRODUCTS, INC.
COSTA MESA, CALIFORNIA

SCHEMATIC DIAGRAM, UNIVERSAL FILTER MINI-SLOT, UF2

SIZE D | FSCM NO. | DWG NO. SH-004031-00 | REV A
SCALE NONE | CAD FILE NO. SH4031A1.S01 | SHEET 1 OF 1

DWG NO. SH-004031-00 REV A