MKS-7

SERVICE NOTES
First Edition

SPECIFICATIONS

MELODY, CHORD BLOCK

DCO	LFO MOD	±400 cents
	BENDER	±1200 cents
VCF	CUTOFF FREQ.	5Hz to 50kHz
	RESONANCE	0 to self oscillation
	ENV MOD	±14 octaves
	LFO MOD	±3.5 octaves
	BENDER	±3.5 octaves
	KEY FOLLOW	+3/–2 octaves
ENV	ATTACK TIME	3ms to 3s
	DECAY TIME	3ms to 12s
	SUSTAIN LEVEL	0 to 100%
	RELEASE TIME	3ms to 12s
LFO	RATE	0.1Hz to 30Hz
	DELAY TIME	0 to 3s

BASS BLOCK

VCF	CUTOFF FREQ.	15Hz to 40kHz
	RESONANCE	0 to self oscillation
	ENV MOD	+9 octaves
ENV	ATTACK TIME	3ms to 2.5s
	DECAY TIME	3ms to 12s
	SUSTAIN LEVEL	0, 33, 66, 100%
	RELEASE TIME	3ms to 12s
BASS DETUNE		±50 cents

MASTER TUNE ±50 cents

OUTPUT
MIX: 1/4" phone jack 0/–15/–30 dBm
MULTI: –10 dBm

POWER CONSUMPTION 25W

DIMENSIONS
BLACK: 482(W)x400(D)x88(H)mm/18-15/16"x15-3/4"x3-7/16"
IVORY: 430(W)x400(D)x88(H)mm/16-15/16"x15-3/4"x3-7/16"

WEIGHT
BLACK: 7kg/15 lb 7 oz
IVORY: 7.5kg/16 lb 9 oz

ACCESSORIES
MIDI Cable (1m)
Connection Cord (2.5m) x 2

OPTIONS
Carrying Case TB-2U
MIDI/SYNC Cable MSC-25 (2.5m), MSC-50 (5m)

FRONT SIDE

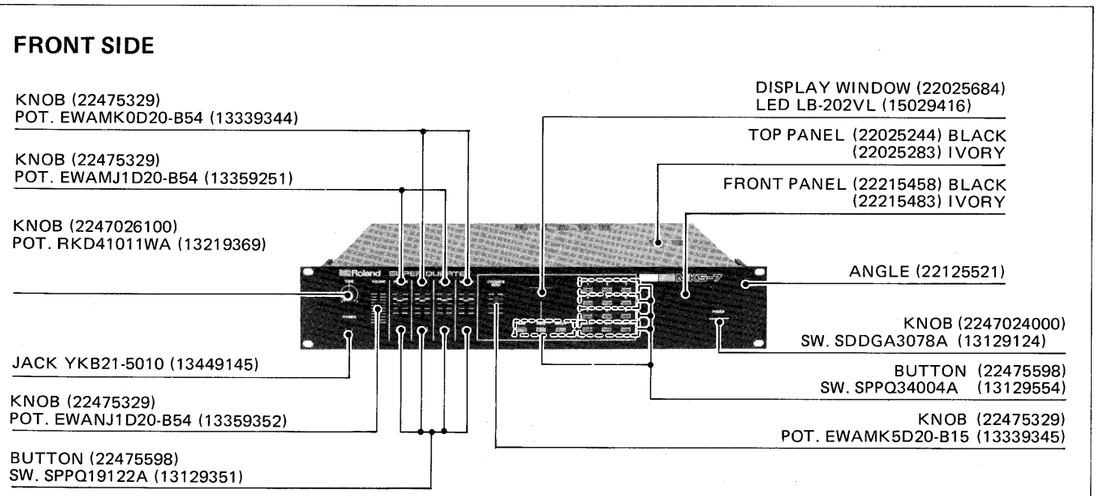

REAR SIDE

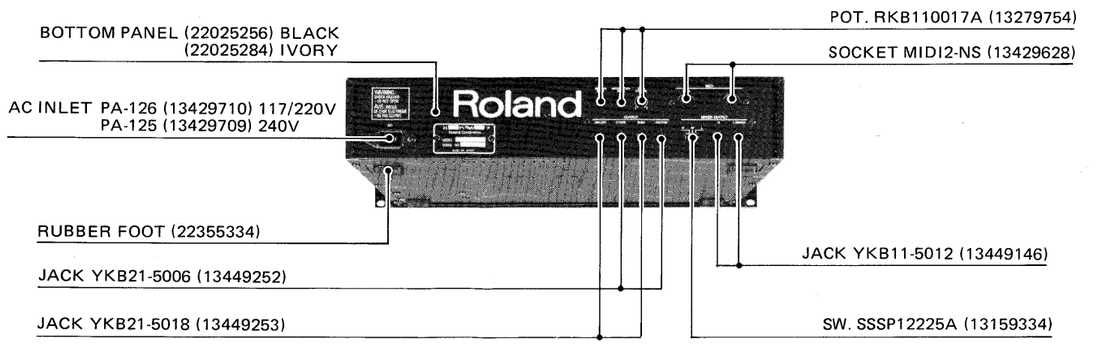

DISASSEMBLY

TOP PANEL REMOVAL SCREWS: ❶ , ❷ , ❸ and ❹

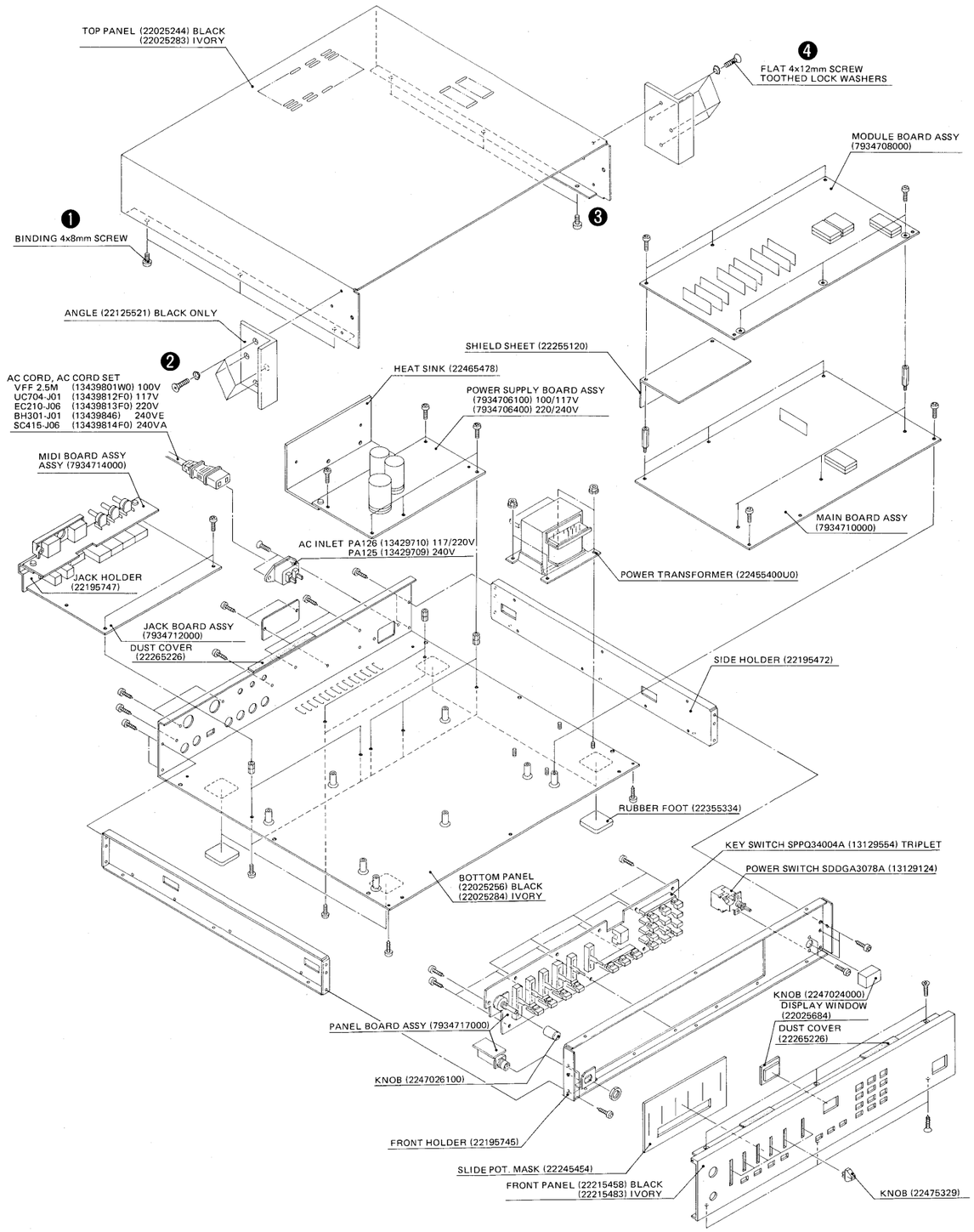

PARTS LIST

PANEL

22215458	Front	black
22215483	Front	ivory
22025244	Top	black
22025283	Top	ivory
22025256	Bottom	black
22025284	Bottom	ivory

HOLDER

22125521	Angle	
22195745	Front	
22195472	Side	
22195747	Jack	
22195744	Cord	(100V only) black
22195788	Cord	(100V only) ivory

COVER

22025684		Display window
22245454		Slide pot. mask
22265226		Dust cover

KNOB, BUTTON

2247024000	Knob	Power switch
2247026100	Knob	Rotary
22475329	Knob	Slider
22475598	Button	Key switch

SWITCH

13129124	SDDGA3078A	Power switch
13129554	SPPQ34004A	Key switch triplet
13129351	SPPQ19122A	Key switch
13159334	SSSP12225A	Slide switch

PCB ASS'Y

7934708000	Module board		(PCB 22925118)
7934710000	Main board		(PCB 22925135)
7934712000	Jack board		(PCB 22925135)
7934714000	MIDI board		(PCB 22925135)
7934717000	Panel board		(PCB 22925136)
7934706100	Power supply board	100/117V	(PCB 22925137)
7934706400	Power supply board	220/240V	(PCB 22925137)

JACK

13449145	YKB21-5010	PHONES
13449252	YKB21-5006	CHORD, RHYTHM
13449253	YKB21-5018	BASS, MELODY
13449146	YKB11-5012	MIX

SOCKET

13429710	PA-126		AC inlet (117/220V)
13429709	PA-125		AC inlet (240V)
13429628	MIDI2-NS	5P dual	DIN
13429523	SMO-28-S6T	28p in	IC socket

CONNECTOR

13439260	5267-03A	3P	
13439261	5267-04A	4P	
13439262	5267-05A	5P	
13439263	5267-06A	6P	
13439264	5267-07A	7P	
13439265	5267-08A	8P	
13439269	5267-09A	9P	
13439266	5267-10A	10P	
13439206	3022-6A	6P	VCF,VCA test point
13429169	3024-05CH	5P	7-segment LED
13439288	3021-02	2P	LED holder

FUSE

12559335	T-GGS 1.0A	(prim.100,117V)
12559336	T-GGS 2.0A	(sec.100,117V)
12559509	CEE-T315mA	(prim.220,240V)
12559513	CEE-T1A	(sec.220,240V)

RESISTOR ARRAY

13910114	RGSD 4×223K	22kx4
13919311	RM 8-223J	11kx8
13919310	RM 8-103J	10kx8
13919146	RKM14L503F	R/2R 12bit
13919133	RM0621	R/2R/4R/8R/16R/32R/ 6bit

POTENTIOMETER

(SLIDE)			
13359352	EWANJ1D20-B54	50kBx2	VOLUME
13359251	EWAMJ1D20-B54	50kBx2	RHYTHM,CHORD
13339344	EWAMK0D20-B54	50kB	BASS,MELODY
13339345	EWAMK5D20-B15	100kB	DYNAMICS SENS.
(ROTARY)			
13219369	RKD41011WA	100kB	TUNE
13279754	RKB110017A	100kB	BASS DETUNE/MODULATION SENS./BENDER SENS.
(TRIMMER)			
13299189	RHE0AS30SA	4.7kB	
13299177	RHE0A140XA	10kB	
13299188	RHE0AJ40VA	22kB	
13299190	RHE0AS40TA	47kB	
13299178	RHE0A150RA	100kB	

FILTER

13529105	DSS310-55D223S	EMI filter

POWER TRNSFORMER

22455400U0	universal	100/117/220/240V

DIODE

15019103	1S2473	
15019125	1SS133	
15019208	1SR35-200	
15019245SN	S1VB10	100V 1A rectifier
15019254	2B4B41	100V 2A rectifier
15029152	GL-9HD12	LED
15029416	LB-202VL	7-segment LED

PHOTO COUPLER

15229706	TLP552	

IC

15179184	μPD7810G	CPU
or		
15179194	μPD7811G-101	CPU
or		

15179190	μPD7811G-102	CPU
15229825	MB63H114PF	8-ch counter
15179701	MBM2764-25Z	EP-ROM (Module board)
15179700D0	MBM2764-25Z	EP-ROM (Main board Except US)
15179700E0	MBM2764-25Z	EP-ROM (Main board US only)
15179633	HN61256PC42	ROM }
15179635	HN61256PC44	ROM } PCM
15179661	HN61256PC71	ROM } Rhythm
15179662	HN61256PC72	ROM }
15179185	M82C53-5	Triple programmable interval timers
or		
15179185N0	μPD71054C	Triple programmable interval timers
15219147	μPC624C	8-bit D/A converter
15159503	TC40H000P	Quad 2-input NAND gate
15159505	TC40H004P	Hex inverter
15159514	TC40H032P	Quad 2-input OR gate
15159525	TC40H139P	Dual 2-to-4-line decoder/demultiplexer
15159535	TC40H151P	8-to-1-line data selector/multiplexer
15159532	TC40H161P	Synchronous presettable 4-bit counter
15159507	TC40H273P	Octal D-type flip-flop
15159508	TC40H373P	Octal D-type latch
15159105H0	HD14013BP	Dual D-type flip-flop
15159141T0	TC4040BP	12-stage binary counter
15159128T0	TC4050BP	Hex buffer/converter non-inverting type
15159113H0	HD14051BP	Single 8-ch multiplexer/demultiplexer
15159114H0	HD14052BP	Differential 4-ch multiplexer/demultiplexer
15159129H0	HD14053BP	Triple 2-ch multiplexer/demultiplexer
15159116T0	TC4069UBP	Hex inverter
15159133H0	HD14174BP	Hex D-type flip-flop
15159301H0	HD14520BP	Dual binary up counter
15169117H0	HD7407P	Hex buffer O.C.
15229816	MC5534A	DCO
152298170A	AIQH80017A	VCF,VCA
15229807	IR3R01	Envelope generator
15229802	BA662A	VCA
15219217	MN3006	BBD
15219213	MN3009	BBD
15169504	MN3101	BBD driver
15219124	μPC1252H2	VCA
15189119J0	NJM062	Low-power JFET-input OP Amp
15189154	TL064CN	Low-power JFET-input OP Amp
15189147	NJM072D	Low-noise JFET-input OP Amp
15189158	μPC4082	JFET-input OP Amp
15189171	M5218P	Low-noise OP Amp
15189136	M5218L	Low-noise OP Amp
15219149	MM5437N	Noise generator
15219152	PST520D	Reset IC
15159701	M54522	Transister array
15149110	M54562	Transistor array
15199106NH	μPC7805H	+5V voltage regulator
15199118N0	μPC7815H	+15V voltage regulator
15199102N0	μPC7915	−15V voltage regulator

CAPACITOR

13659214M0	ECET25R682SW	6800μF/25V	
13659223M0	ECET35R332SW	3300μF/35V	
13529104	DE7150F472MVA1	0.0047μF	Line bypass(KC)

TRANSISTOR

15119106DR	2SA933-R
15129108	2SC945-P
15129113	2SC1740-R
15129136	2SC2878-A
15139118B0	2SK381-C-P

AC CORD,AC CORD SET

13439801W0	VFF 2,5M	(100V)
13439812F0	UC 704-J01	(117V)
13439813F0	EC 210-J06	(220V)
13439846	BH 301-J01	(240VE) England
13439814F0	SC 415-J06	(240VA) Australian

OTHERS

22355334	Rubber foot	
22255120	Shield sheet	
22465478	Heat sink	
12389735	CSA 1.60MK	1.6MHz Xtal(ceramic resonator)
12389728	KMFC1034T1	8MHz Xtal(ceramic resonator)
12389719	KMFC1007T31	12MHz Xtal(ceramic resonator)
13719901	R25NQJ82ohm	82Ohm Flame proof type resistor
12369504	SR-4N-4	AC cord bushing(100V only)

COMMERCIALLY AVAILABLE

23485167	348-167	MIDI cable (1m)
23430675	LP-25	Connection cord (2.5m)
	MSC-25	MIDI/SYNC cable (2.5m)
	MSC-50	MIDI/SYNC cable (5m)

IC DATA

μPD7810G/μPD7811G

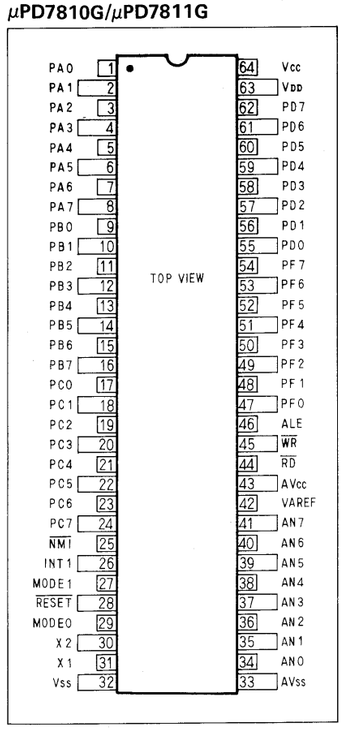

MM5437

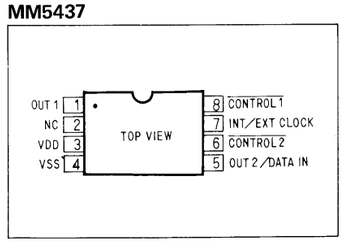

HD14520BP

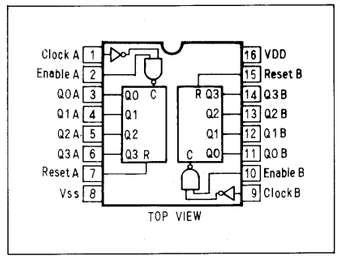

TC40H151P

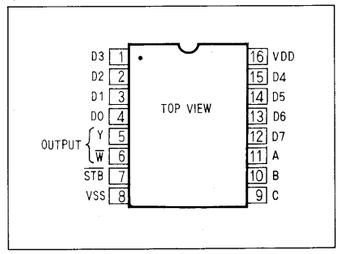

MB63H114

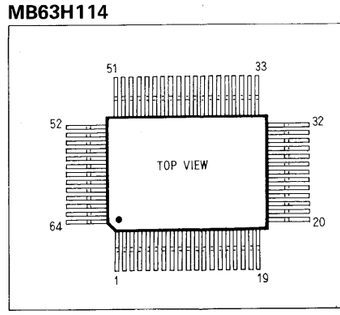

PIN	name	PIN	name	PIN	name	PIN	name
1	INHO	17	ADR2	33	XRES	49	TST2
2	ADRC	18	ADR1	34	OSCi	50	XSTA
3	A	19	ADR0	35	SCO0	51	MSEL
4	D	20	CST0	36	SCO1	52	CLK1
5	B	21	CST2	37	CLK0	53	CLK2
6	ADR7	22	CST4	38	XST0	54	CLK3
7	C	23	CST6	39	XST1	55	CLK4
8	ADR6	24	GATE7	40	XST2	56	XCK0
9	ADR8	25	GATE6	41	XST3	57	XCK1
10	VSS	26	VDD	42	VSS	58	VDD
11	ADR9	27	GATE5	43	XOUT	59	XCK2
12	ADR5	28	GATE4	44	XST4	60	XCK3
13	ADRB	29	GATE3	45	XST5	61	XCK4
14	ADR4	30	GATE2	46	XST6	62	XCK5
15	ADR3	31	GATE1	47	XST7	63	XCK6
16	ADRA	32	GATE0	48	TST1	64	XCK7

μPC624C

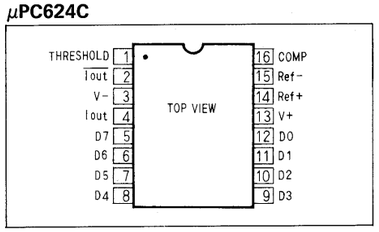

MN3006

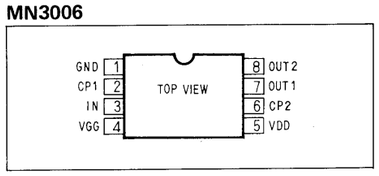

PST520D

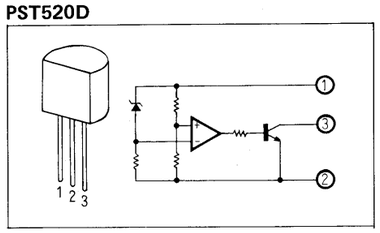

CIRCUIT DESCRIPTION

GENERAL

There are two CPUs on the MKS-7: MAIN CPU (IC45 on MAIN BOARD) and MODULE CPU (IC31 on MODULE BOARD). Two CPUs share the tasks as shown below:

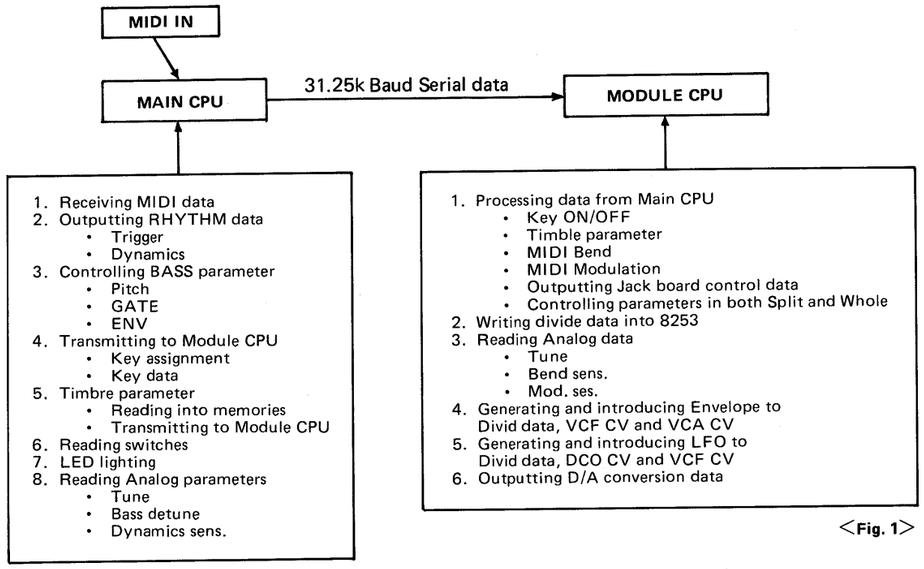

<Fig. 1>

MAIN BOARD

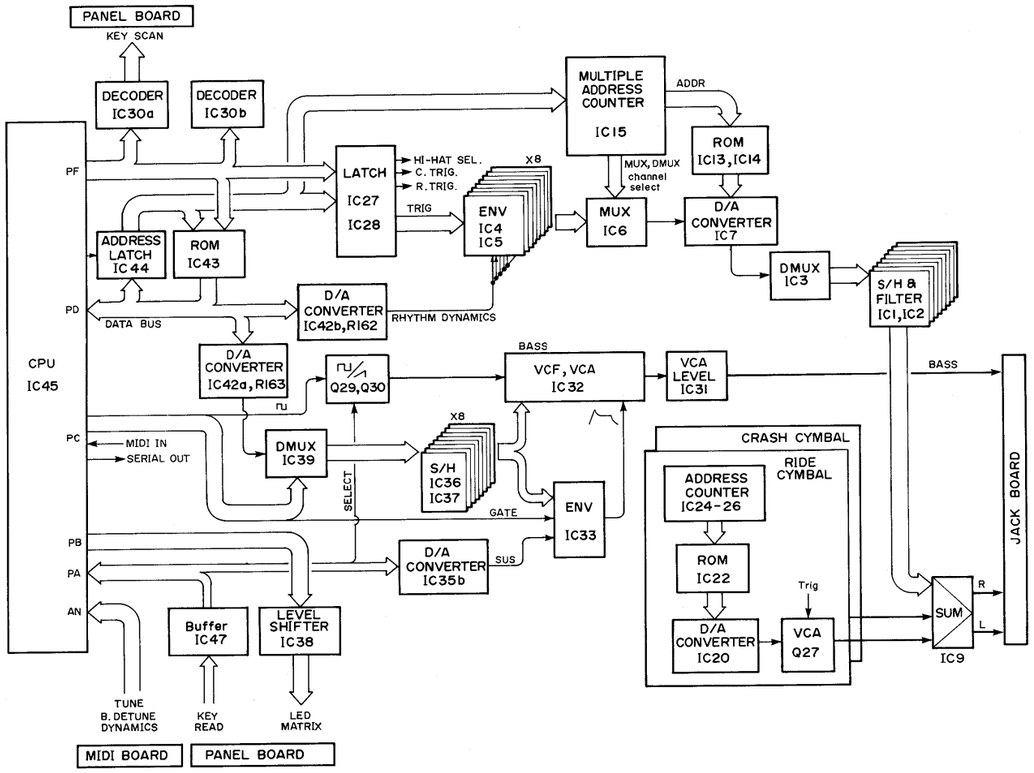

<Fig. 2 MAIN BOARD Block Diagram>

DESIGNATION		PIN No.	FUNCTION	I/O
AN	AN0	34	Master tune	I
	1	35	Bass detune	I
(ANALOG INPUT)	2	36	Dynamic sense	I
	3	37	NC	
	4	38		
	5	39		
	6	40		
	7	41		
PORT A	PA0	1	SW data read	I
	1	2		I
	2	3		I
	3	4		I
	4	5		I
	5	6	Bass ENV	O
	6	7	sustain level select	O
	7	8	Bass waveform select	O
PORT B	PB0	9	Display LED drive	O
	1	10		O
	2	11		O
	3	12		O
	4	13		O
	5	14		O
	6	15		O
	7	16		O
PORT C	PC0	17	Serial out to Module CPU	O
	1	18	MIDI serial input	I
	2	19	Bass gate	O
	3	20	Bass S/H DMUX inhibit	O
	4	21	Bass S/H DMUX channel select	O
	5	22		O
	6	23		O
	7	24	Bass pitch clock	O
PORT D	PD0	55	ROM address (out) / ROM data (in) / Rhythm, Bass D/A data (out)	I/O
	1	56		I/O
(DATA BUS)	2	57		I/O
	3	58		I/O
	4	59		I/O
	5	60		I/O
	6	61		I/O
	7	62		I/O
PORT F	PF0	47	ROM address / Latch address	O
	1	48		O
	2	49		O
	3	50		O
	4	51		O
	5	52	ROM/Latch select	O
	6	53	LED dynamic scan and SW DMUX address	O
	7	54		O
Xtal-1		31	Internal — clock oscillator	—
Xtal-2		30		—
RESET		28	Reset pulse	I
RD		44	ROM read pulse	O
WR		45	Latch write pulse	O
ALE		46	Address latch pulse	O
MODE 0		29	1 External ROM mode	—
MODE 1		27	0 External ROM mode	—

<Table 1a Main CPU Pin Designation (μPD7810G/7811G)>

CPU		40H139 IC30-b	ROM IC43	Bass D/A Latch	Rhythm D/A Latch	Rhythm TRIG & Dynamics Hold
PF	5	(G)	0	1	1	1
	4	(B)		0	1	1
	3	(A)		1	0	1
	2					Hi-Hat Close/open select
	1					Ride cymbal
	0					Crash cymbal
PD	7		0000H to 1FFFH			Clap.
	6					Rim Snot
	5	40H373 IC44 Address Lower Latch		00H to 3FH	00H to 3FH	Hi-Hat
	4					Hi Tom
	3					Mid Tom
	2					Low Tom
	1					Snear Dr.
	0					Bass Dr.
Available timing		ALE	RD	WR	WR	WR

<Table 1b Address Map>

1. SWITCH READING

Main CPU IC45 reads 19 front panel switches through 4 row x 5 column Matrix on the Panel Board.

	IC30a	Port A				
		0	1	2	3	4
Scan 0	B A 0 0	[3]	[6]	[9]	Trans-pose	Melody Select
Scan 1	0 1	[2]	[5]	[8]	[0]	Chord Select
Scan 2	1 0	[1]	[4]	[7]	MIDI ch	Bass Select
Scan 3	1 1	Melody	Chord	Bass	Rhythm	

<Table 2 Switch Matrix>

Switch scanning data from PF6 and PF7 of CPU IC45 are decoded at Line Decoder IC30a which pulses one of its outputs SCAN0-SCAN3 (on the matrix rows) low. The switch status on the low row is read into PA0-PA4 of the CPU through Inverting Buffer IC47. The CPU repeats the scanning every 5ms for the remaining switches, cycling at 20ms intervals.

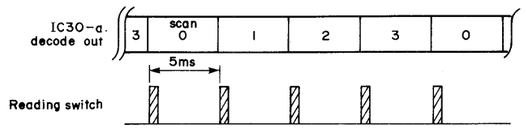

<Fig. 3 Timing chart>

2. LED LIGHTING

The LEDs are placed on the 8 x 4 Matrix as shown in Table 3. For these LEDs, switch scan data is concurrently used for lighting. It is fed to LED Driver IC3 on the Panel Board to have a low at one of IC3 outputs, providing a return path for an array of LEDs. With drive current supplied through LED Driver IC38 on the Main Board, each LED lights up dynamically at 20ms intervals on a 25% duty cycle current.

P F 7 6	Port B							
	7	6	5	4	3	2	1	0
0 0	lower digit							
	(a)	(b)	(f)	(g)	(dp)	(c)	(d)	(e)
0 1	upper digit							
	(a)	(b)	(f)	(g)	(dp)	(c)	(d)	(e)
1 0	note on indicator							
					Rhythm	Bass	Melody	Chord
1 1	display select							
						Bass	Melody	Chord

<Table 3 LED Matrix>

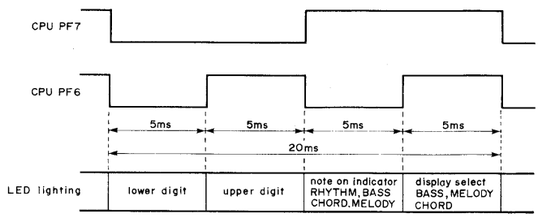

<Fig. 4 Timing chart>

3. POTENTIOMETER READING

CPU IC45 has a built-in A/D converter. Three of the eight Analog Inputs are used for potentiometer readings as shown in Table 4.

AN	Analogue Parameter
0	Master tune
1	Bass Detune
2	Dynamics Sens

<Table 4>

Timing for reading is determined by the CPU Main program.

4. MIDI MESSAGE READING

Photo coupler IC1 on MIDI board shifts MIDI messages to the TTL level and sends them to CPU IC45.

5. ROM READING AND SERIAL TRANSMITTING

Tone color parameters of MELODY, CHORD, and BASS blocks are stored in ROM IC43.

Upon receiving MIDI program change message, CPU IC45 first determines: Tone color parameter block (MELODY, CHORD, or BASS) being assigned to that MIDI CH.
Tone Number represented by the program change message.

Then the CPU accesses the correct memory location in ROM and transfers it (timbre parameter) to the destination in serial format as follows.
MELODY or CHORD parameter to Module CPU through SERIAL OUT.
BASS parameter to Latch IC41 through PORT D.

6. BASS BLOCK

a) Pitch generator

Pulse from PC7 of CPU IC45 is 1 octave lower than that of the MIDI note number. Duty factor of the pulse is 1/16, 1/8 or 1/4, depending on the tone color. When the sawtooth is selected by the waveform selector, only the pulse, of 1/16 duty factor is supplied.
Pitch is variable ±50 cents from MASTER TUNE and ±50 cents from BASS DETUNE, total 100 cents detune can be accomplished.

b) Waveform selector and generator

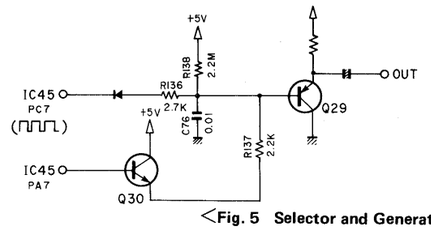

<Fig. 5 Selector and Generator>

Output from PA7 of CPU IC45 turns on or off Q30. The resultant circuit connections and waveforms are as shown in Fig. 6.

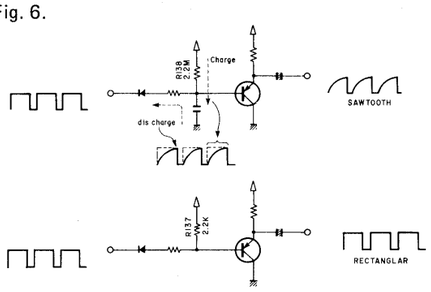

<Fig. 6 Equivalent circuits>

c) Bass parameter sample and hold

BASS parameter data sent out from PD0-PD5 of CPU IC45 is latched into Latch IC41. The 6-bit data is converted to analog form at R-2R ladder network R163 and is sampled into correct hold amp by DMUX IC39 as shown in Table 5.

	4051 (IC39)			TL064		Parameter name
	C	B	A	IC	OUT	
CPU 4051 PC 3 ..... inhi 4 ..... A 5 ..... B 6 ..... C D/A conversion data output: IC42(a) .... Com					Pin	
	0	0	0	36	14	Env Attack
	0	0	1	37	7	Env Decay
	0	1	0	37	1	VCA level
	0	1	1	36	8	Env Release
	1	0	0	37	14	VCF Resonance
	1	0	1	36	7	VCF Env.modulation
	1	1	0	37	8	VCF Key follow
	1	1	1	36	1	VCF Cutoff freq.

<Table 5 DMUX channel select>

Sustain level data from PA5 and PA6 of CPU IC45 is converted into the control voltage by 2 bit D/A converter IC35b and is supplied to Envelope generator IC33.

d) Envelope generator

Envelope generator IC33 generates analog envelope when pin 13 receives GATE ON/OFF of CPU PC2 passed through transistor Q25.

e) VCF, VCA

A1QH80017A IC32 is a one-chip VCF and VCA.
Both VCF and VCA are individually controlled by the several parameters integrated into one voltage: VCF CV contains CUTOFF frequency, ENV and Key follow; VCA CV contains ENV only.

7. RHYTHM BLOCK

MB63H114 IC15 is a custom LSI Multiple Address Counter for use in PCM Rhythm machine, having built-in eight 13-bit address counters, a clock generator, a timing generator, and an address selector.

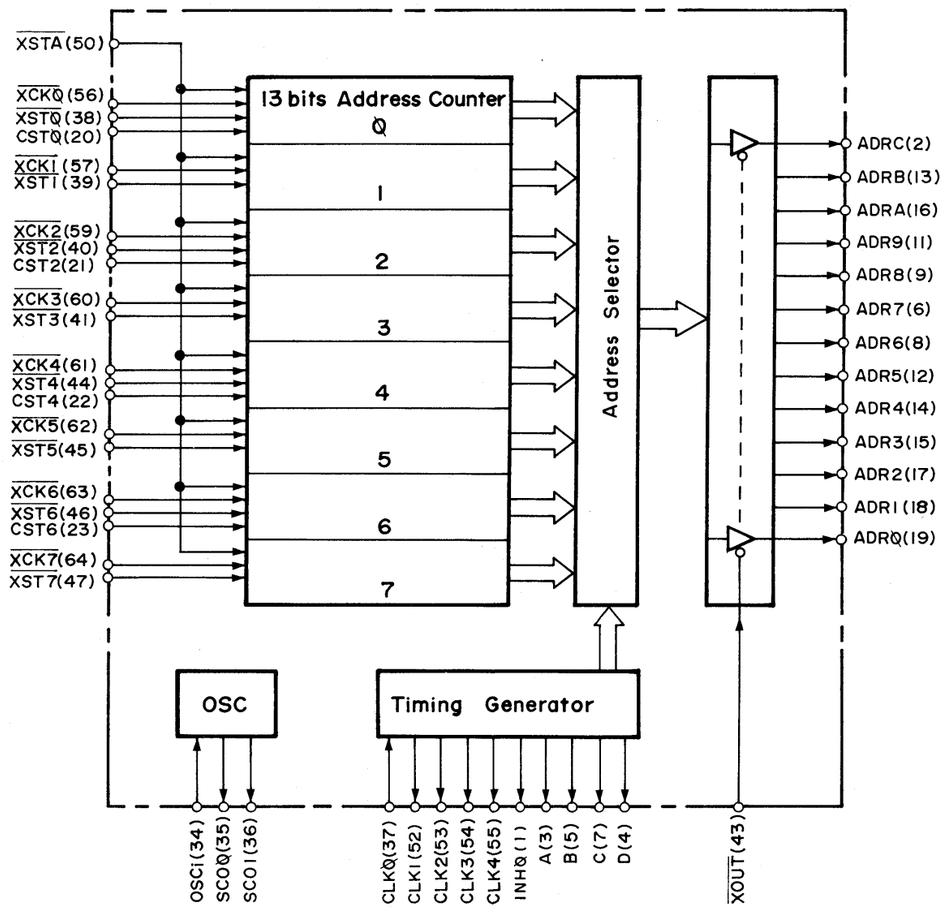

<Fig. 7 MB63H114 Block Diagram>

DESIGNATION		PIN	FUNCTION	I/O
CST	0	20	+5V pull up	I
	2	21		I
	4	22		I
	6	23		I
$\overline{XST}$	0	38	Counter select	I
	1	39		I
	2	40		I
	3	41		I
	4	44		I
	5	45		I
	6	46		I
	7	47		I
GATE	0	32	NC	O
	1	31		O
	2	30		O
	3	29		O
	4	28		O
	5	27		O
	6	25		O
	7	24		O
$\overline{XCK}$	0	56	Counter clock input	I
	1	57		I
	2	59		I
	3	60		I
	4	61		I
	5	62		I
	6	63		I
	7	64		I
ADR	0	19	ROM address	O
	1	18		O
	2	17		O
	3	15		O
	4	14		O
	5	12		O
	6	8		O
	7	6		O
	8	9		O
	9	11		O
	A	16		O
	B	13		O
	C	2		O
A		3	MUX, DMUX channel select	O
B		5		O
C		7		O
D		4	Clock out (for 8 counters)	O
INH0		1	DMUX inhibit	O
CLK	1	52	MUX inhibit	O
	2	53		O
	3	54	NC / ROM chip enable	O
	4	55	Latch clock	O
$\overline{XOUT}$		43	GND pull down	I
$\overline{XSTA}$		50	Count start	I
$\overline{XRES}$		33	Reset pulse	I
OSCi		34	Internal-clock oscillator 1.6MHz	I
SCO0		35		O
SCO1		36		O
CLK0		37		I
MSEL		51	GND pull down	I
TST1		48		I
TST2		49		I

<Table 6 MB63H114 Pin Designation>

Sound data in ROM IC13 or IC14 is latched into the Latch IC8 when address data*1 is sent to ROM from an address counter in IC15. Latched sound data is converted to an analog voltage and becomes a sound signal at D/A converter IC7, having an envelope *2 which is fed from MUX IC6. The sound signals, which are distributed to correct hold amp by DMUX IC3, go to the Right channel and the Left channel of Jack Board after passing the filter.

*1 With BD, SD, RS, and CP selected LSB ADR0 is defeated at Digital DMUX IC16 and "0" is fed to ROM instead, this is because each of these sound data shares an address area with another sound data (having odd address) which is unused MKS-7.

*2 In the case of Hi-HAT, Envelope is obtained by turning transistor Q8 ON or OFF with HI-HAT select, thus controlling VCA Q9.

Crash cymbal circuit is similar to Ride cymbal circuit in configuration. Crash cymbal sound data in ROM IC21 is latched into Latch IC18 every time the address counter IC23, IC24, and IC26 increments by one step.
The latched sound data is converted into an analog voltage at R-2R ladder network R160 and becomes a sound signal having an envelope at VCA Q28.

MODULE BOARD

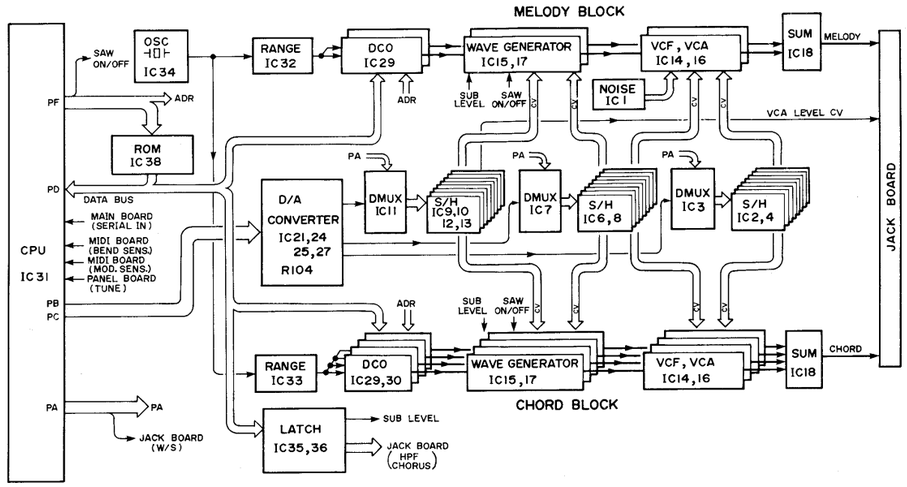

<Fig. 8 MODULE BOARD Block Diagram>

DESIGNATION		PIN No.	FUNCTION	I/O
AN	AN0	34	Tune	I
	1	35	NC	
(ANALOG INPUT)	2	36		
	3	37		
	4	38	Modulation sens	I
	5	39	Bender sens	I
	6	40	NC	
	7	41		
PORT A	PA0	1	S/H multiplex channel select A	O
	1	2	B	O
	2	3	C	O
	3	4	Noise switch 0: OFF 1: ON	O
	4	5	S/H DMUX inhibit (IC11)	O
	5	6	S/H DMUX inhibit (IC 7)	O
	6	7	S/H DMUX inhibit (IC 3)	O
	7	8	Whole/Split 0: Whole 1: Split	O
PORT B	PB0	9	D/A converter (upper 6 bits)	O
	1	10		O
	2	11		O
	3	12		O
	4	13		O
	5	14		O
	6	15	NC	
	7	16		
PORT C	PC0	17	NC	
	1	18	Serial receive line (from main CPU)	I
	2	19	D/A converter (lower 6 bits)	O
	3	20		O
	4	21		O
	5	22		O
	6	23		O
	7	24		O
PORT D	PD0	55	ROM address (out) / Data (in/out)	I/O
	1	56		I/O
(DATA BUS)	2	57		I/O
	3	58		I/O
	4	59		I/O
	5	60		I/O
	6	61		I/O
	7	62		I/O
PORT F	PF0	47	ROM address	O
	1	48		O
	2	49		O
	3	50		O
	4	51	8253/switch latch write	O
	5	52		O
	6	53	Sawtooth switch (CHORD) 0: OFF 1: ON	O
	7	54	Sawtooth switch (MELODY) 0: OFF 1: ON	O
Xtal-1		31	Internal — clock oscillator	I
Xtal-2		30		I
RESET		28	Reset pulse	I
RD		44	ROM read pulse	O
WR		45	8253/latch write pulse	O
ALE		46	Address latch pulse	O
MODE 0		29	1	I
MODE 1		27	0 External ROM mode	I

<Table 7 MODULE CPU Pin Designation (μPD7810G/7811G)>

2-Voice (Melody)		4-Voice (Chord)		Description				
IC35		IC36		Range Select	16′	8′	4′	
	15		15		0	0	1	
	12		12		0	1	1	
				Sub level	0	1	2	3
	10		10	Select	0	0	1	1
	7		7		0	1	0	1
	5		5	H.P.F	1 = ON 0 = OFF			
	2		2	Chorus	1 = ON 0 = OFF			

<Table 8 Latch data>

Module Board consists of MELODY BLOCK (2 Voices) and CHORD BLOCK (4 Voices).

a) OSC

The oscillator consists of a master oscillator IC34 (8MHz) and Binary counters IC32, 33. The Binary counters divide 8MHz by two, four or eight (see Fig. 11) according to RANGE (4′, 8′, 16′) of Exclusive message and feed it to DCOs IC29, 30 which are 16-bit Programmable interval timers.

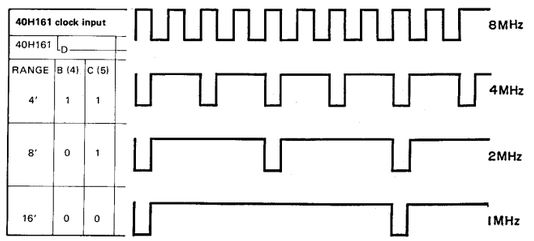

<Fig. 9 Timing chart>

b) DCO

Each of six counters (three per timer) divides OSC frequency by a number defined by a divide data represented on the data bus of the Module CPU IC31.
The divide data is the sum of a key number and the outputs from LFO, Bender and Tune for a particular note.
The resultant at the output of each counter will be a rectangular at an audio frequency.

c) D/A Converter

In controlling voices the Module CPU does not output each parameter indepently, rather, it integrates some of parameters that are needed for a particular destination (DCO, VCF or VCA) and represents them as a 12-bit data (upper 6 bits at PB0-PB5 and lower 6 bits at PC2-PC7).
The data is converted into an analog voltage which is conditioned and routed to the destination module from the DMUX IC3, 7 or 11 as shown Fig. 12.

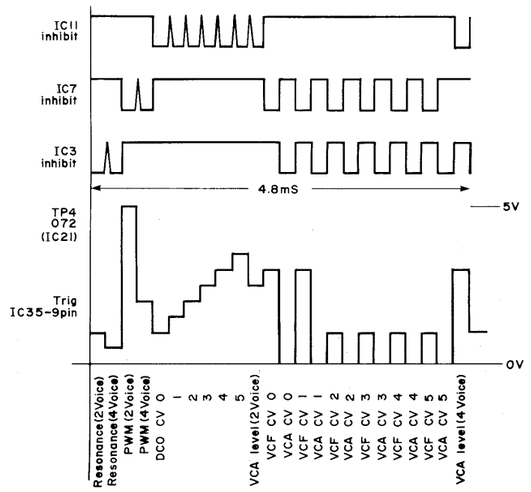

<Fig. 10 D/A & S/H timing chart>

Ch.	Pin	IC11	IC7	IC3
7	4	DCO CV 1	VCF CV 1	VCA CV 1
6	2	2	2	2
5	5	3	3	3
4	1	4	4	4
3	12	5	5	5
2	15	6	6	6
1	14	VCA level (2 Voice)	PWM CV (2 Voice)	Resonance (2 Voice)
0	13	VCA level (4 Voice)	PWM CV (4 Voice)	Resonance (4 Voice)
range		0 ~ −10V	+4 ~ −6V	0 ~ +10V
V/V converter		072 IC21(b)	M5218P IC20(A)	M5218P IC20(b)

<Table 9 DMUX data>

d) Wave generator

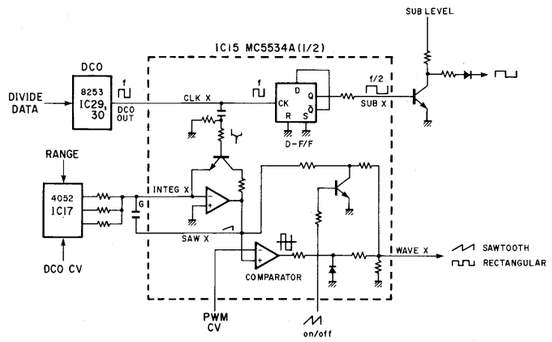

<Fig. 11 MC5534A>

MC5534A IC15 is, with a given rectangular at CLK X (CLK Y), capable of generating three different waveforms; divided by two rectangular, sawtooth and variable–width rectangular (Pulse Width Modulated).

[SUB OSCILLATOR]
Output of the Sub Oscillator is generated by dividing the DCO output frequency that is supplied to CLKX and CLKY by two at D-F/F in Wave Generator IC15. The amplitude of this output varies in four steps by changing the collector voltage Q3 and Q6 with the output of 2-bit D/A converter IC28.

[SAWTOOTH]
Miller integrating circuit in IC15 generates a sawtooth wave at DCO output rate with its amplitude being kept constant over the frequency range by DCO CV.

[PULSE MODULATED WAVE]
With sawtooth wave and PWM CV applied at input pins, the comparator in IC15 develops a square wave whose duty cycle will vary 50-95% in response to PWM CV levels.
Duty cycle is 50% at +6V PWM CV and 95% at +0.6V.
With PWM OFF, PWM CV is −1V; this can swing and keep comparator output to High, disabling the rectangular.

JACK BOARD Block Diagram

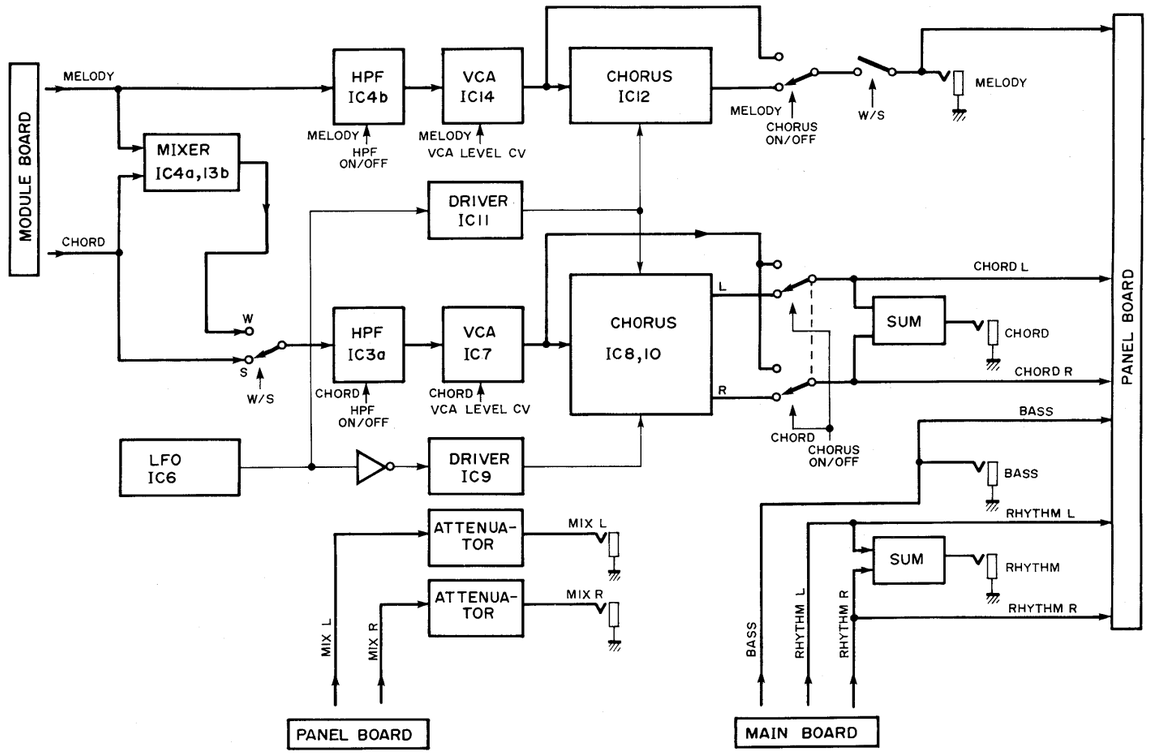

<Fig. 12 JACK BOARD Block Diagram>

e) VCF, VCA

A1QH80017A IC14, 16 is a one-chip VCF and VCA.
Both VCF and VCA are individually controlled by the several parameters integrated into one voltage: VCF CV contains CUTOFF frequency, ENV. LFO and Key follow; VCA CV includes ENV and GATE.

ADJUSTMENT

ENGINEER MODE

Engineer Mode is used to edit each parameter of the MELODY, CHORD, and BASS blocks on the synthesizer.

- **ENTERING ENGINEER MODE**
  While holding down one of Sound Source Selector buttons – MELODY, CHORD or BASS to be edited, depress MIDI CH. The button flashes, indicating that the machine is in the Engineer Mode.
- **EDITING**

1. Using Tables 1 and 2, find out the number corresponding to a parameter to be altered. Enter the number on the numerical pad. The display shows the number.
2. DYNAMICS SENS serves as an edit knob, and the new number is represented in the display window as a number between 00 and 127. The numbers above 100 are indicated in lower two digits. (e.g. 123=23)
   In the case where parameters functioning in place of switch, a parameter can effectively open or close the switch when the value exceeds the predetermined figure. For example, CHORUS is turned ON when the value decreases below 63, and OFF when above 64.

- **RETURNING TO NORMAL MODE**
  Push the MIDI channel Button to Normal functioning.

エンジニア・モード

エンジニア・モードは、メロディー、コード、ベース・ブロックについてシンセサイザーの各パラメーターをエディットするモードです。

●エンジニア・モードへの入り方

電源ON の状態にてメロディー、コード、ベースのうち、修正したいブロックの音源セレクト・ボタンを押しながら MIDI チャンネル・ボタンを押します。指定した音源セレクト・ボタンが点滅します。

●エディットの方法

1．エディットしたいパラメータに対応した番号を Table 1．2 より探し、ナンバー・ボタンで選択します。
選択したパラメータ・ナンバーがディスプレイに表示されます。

2．ダイナミクス・センシティビティー・ツマミがエディット・ツマミとして動作しますので好みの位置に調節します。エディット時のディスプレイは設定値表示になります。
（最少：00、最大127 ただし 100 のケタは省略され 2 ケタ表示になります。例 123＝23）
スイッチ動作のパラメータ、例えばコーラスの場合には、63以下が〝ON〟64以上が〝OFF〟に設定されています。

●ノーマル・モードへの戻り方

MIDI チャンネル・ボタンを押します。

No.	PARAMETER		No.	PARAMETER	
01	LFO	Rate	14	ENV	Release time
02		Delay time	15	Dynamic select	VCF, VCA/VCF/VCA/OFF
03	DCO	LFO mod.	17	Range	4′/8′/16′
04		PWM	18	PWM	LFO/manual
05	VCF	Cutoff frequency	19	Rectangular	ON/OFF
06		Resonance	20	Sawtooth	ON/OFF
07		ENV mod.	21	Sub	Level: 0/1/2/3
08		LFO mod.	22	HPF	ON/OFF
09		Key follow	23	VCF	ENV: ⌒ +/⌒ –
10	VCA	Level	24	VCA	ENV/GATE
11	ENV	Attack time	25	Chorus	ON/OFF
12		Decay time	26	Noise (MELODY)	ON/OFF
13		Sustain level			

<Table 1 MELODY, CHORD BLOCK PARAMETER>

No.	PARAMETER	
04	DCO	Pulse width
05	VCF	Cutoff frequency
06		Resonance
07		ENV mod.
09		Key follow
10	VCA	Level
11	ENV	Attack time
12		Decay time
13		Sustain level
14		Release time
20	Wave select	Rectangular/sawtooth

<Table 2 BASS BLOCK PARAMETER>

TEST MODE

Test, Adjust and Inspection programs run only in the Test Mode.

- **ENTERING THE TEST MODE**
  While pressing button No. 3, switch the power ON. The display shows – [Ad] (Adj.)
- **FOUR FUNCTIONS IN THE TEST MODE**
  Each of MELODY, CHORD, BASS, and RHYTHM buttons serves as a function selector button.

MELODY ..... UNISON BASS ..... BASS
CHORD ..... ROTARY RHYTHM ..... RHYTHM

1. UNISON (MELODY)
   In this mode the unit outputs all the 6 voices simultaneously from the CHORD and MELODY channels.
   The display flashes [0-] , indicating that the default test program is D/A OFFSET Adj.
   To change the adjusting item, select the corresponding number on the numerical pad.

2. ROTARY (CHORD)
   In this mode one module is activated at a time with MELODY or CHORD is selected.
   The display flashes [01] . The left digit indicates test item and the right digit the module being sounded.
   To change the test item, select the number from the numerical pad. To change the module to the next channel, press BASS, CHORD or MELODY.

3. BASS (BASS)
   This mode is used for testing BASS. The display flashes [b0] . Select a test item on the numerical pad.

テスト・モード

テスト・モードは調整、検査を行なう時に使用するモードです。このモードでは調整検査用にプリセットされているセッティングを呼び出すことができます。

●テスト・モードへの入り方

ナンバー・ボタン〝3〟を押しながら電源を投入します。
ディスプレイに [Ad] (Adj) と表示されます。

●テスト・モードの4つのモード

各ブロックのボタン（メロディー、コード、ベース、リズム）がモード・セレクト・ボタンになります。以下に各モードを説明します。

1．ユニゾン（メロディー・ボタン）
メロディー、コードの全モジュール（6音）が同時に発音するモードです。ディスプレイは [0-] が点滅します。ディスプレイはナンバー・ボタンを押すことで変化し 0 － 9 の10通りのテストプログラムを表示します。

Display	TEST PROGRAM	
0 –	Adjustment	D/A offset
1 –	Adjustment	VCA offset
2 –	Adjustment	VCF Resonance, Frequency and VCA Gain
3 –	Adjustment	VCF Width
4 –	Adjustment	⊓⊔ duty cycle 50%
	Inspection	⊓⊔ duty cycle 95%
5 –	Inspection	⌒ level (Range)
6 –	Inspection	⌒ level (Key scale)
7 –	Inspection	⊓⊔ duty cycle 50% (Key scale)
8 –	Inspection	Sub OSC level
9 –	Inspection	Noise ON/OFF

<Table 3 UNISON TEST PROGRAM>

2．ロータリー（コード・ボタン）
メロディー、コードの6モジュールのうち1モジュールずつ順番に発音するモードです。ディスプレイは [01] が点滅します。テスト・プログラムは7通りあり、ナンバー・ボタンを押すことで変化します。テスト・プログラムの番号は、ディスプレイの左のケタに表示されます。発音しているモジュールは音源セレクト・ボタンのどれかを押すつど次のモジュールに変わっていきます。発音しているモジュール・ナンバーはディスプレイの右のケタに表示されます。

Display	TEST PROGRAM	
0 X	Inspection	⌒ Level
1 X	Inspection	⊓⊔ Level
2 X	Inspection	PWM LFO
3 X	Inspection	VCF low frequency
4 X	Inspection	VCF high frequency
5 X	Inspection	HPF ON/OFF
6 X	Inspection	CHORUS ON/OFF

<Table 4 ROTARY TEST PROGRAM>

3．ベース（ベース・ボタン）
ベース用のモードです。ディスプレイは [b0] が点滅します。ディスプレイはナンバー・ボタンを押すことで変化し、0 － 8 の9通りのテスト・プログラムを表示します。

Display	TEST PROGRAM	
b 0	Adjustment	VCA offset
b 1	Adjustment	ENV Attack time
b 2	Inspection	VCF low frequency
b 3	Inspection	VCF high frequency
b 4	Inspection	VCF ENV/Dynamics (40H)
b 5	Inspection	VCF ENV/Dynamics (7FH)
b 6	Inspection	VCA Level
b 7	Inspection	VCF Width
b 8		

<Table 5 BASS TEST PROGRAM>

4. RHYTHM (RHYTHM)
Rhythm circuits can be checked in this mode. The display flashes [dr] upon pressing RHYTHM.
Select the voice using numerical pad. The voice sounds once for each tap on the numerical pad.
Dynamics level can be varied from DYNAMICS SENS.

4．リズム（リズム・ボタン）
リズム用のモードです。ディスプレイは [dr] が点滅します。
各音源がナンバー・ボタンとモード・ボタンに割り当てられ、ボタンを押すことで発音します。
ダイナミクスはダイナミクス・センシティビィティー・ツマミでコントロールすることが出来ます。

Button	VOICE
0	RIDE CYMBAL
1	BASS DRUM
2	SNARE DRUM
3	LOW-TOM
4	MID-TOM
5	HI-TOM
6	RIM SHOT
7	HAND CLAP
8	CLOSED HI-HAT
9	OPEN HI-HAT
FUNCTION	CLASH CYMBAL

<Table 6 RHYTHM TEST PROGRAM>

TO RETURN TO THE NORMAL MODE, switch the power OFF and ON again.

●ノーマル・モードへの戻り方
電源をいったん切り、ふたたび投入します。

ADJUSTMENT

With Test Mode Set the controls as shown below (initial setting). In these adjustments, each name of the switches is called by the name shown in Fig. 1.

調整

テスト・モードでのつまみの初期設定はFig·1のようにします。
この章では、各スイッチ名をFig·1のように呼ぶことにします。

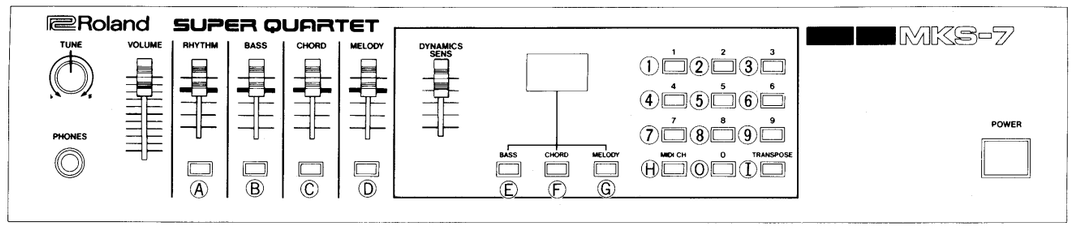

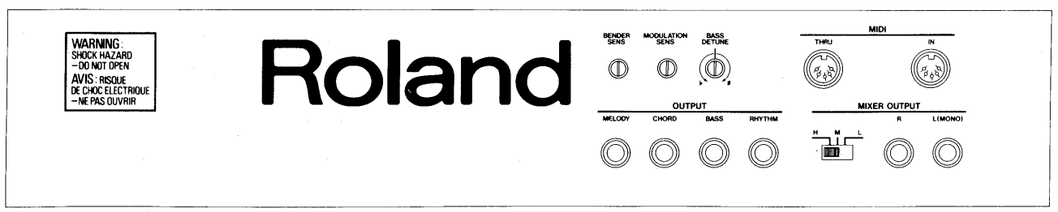

<Fig. 1>

Allow at least ten minutes for warm-up.
調整、検査は最低10分の通電後始めて下さい。

On power up the MKS-7 Keyboard is assigned notes as follows.

MKS-7 がイニシャライズされた時、ノートとキー・ナンバーの関係は図2の通りです。

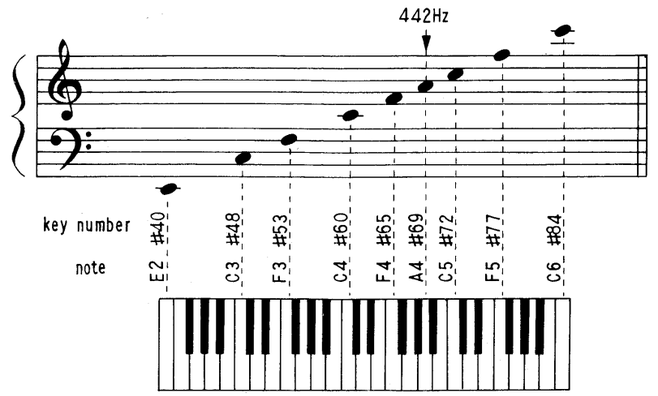

<Fig. 2>

1. POWER SUPPLY BOARD

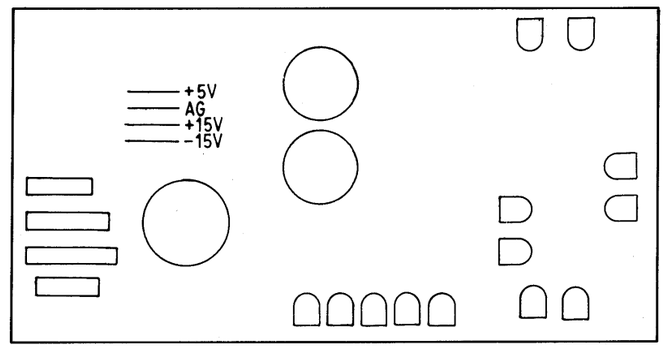

<Fig. 3 Power Supply Board>

	MEASURING INSTRUMENT	ITEM	MODE/CONTROL	DIS-PLAY	TEST POINT (GND)		ADJUST/ CHECK for	READING
1	Digital voltmeter	+ 5V	INITIAL TEST MODE	Rd	+ 5V Jumper	(AG Jumper)	Check	+5.0V ± 0.2V
2	↓	+15V			+15V Jumper	↓	↓	+15.0V ± 0.6V
3		−15V			−15V Jumper			−15.0V ± 0.6V

2. MODULE BOARD (MELODY, CHORD BLOCK)

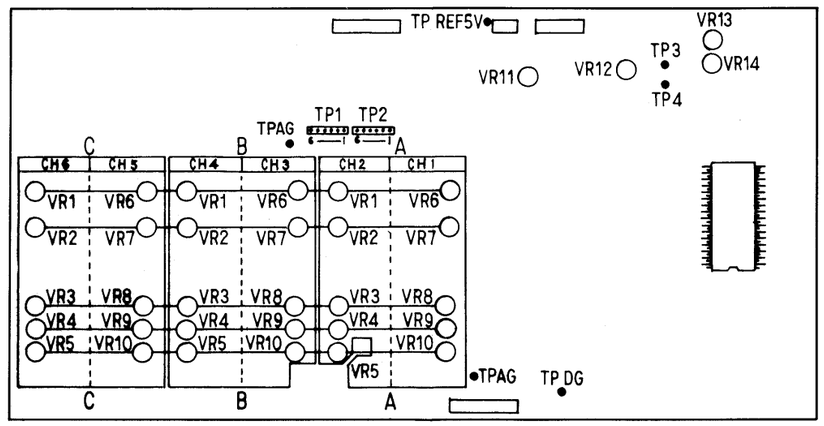

<Fig. 4 Module Board>

The Program runs only in the TEST MODE. Proceed in numerical order.
この調整、検査はテスト・モードでのみ行なえます。項目1から19まで順番に進んでください。

	MEASURING INSTRUMENT	ITEM	MODE/CONTROL	DIS-PLAY	TEST POINT (GND)		ADJUST/ CHECK for	READING
1	Digital voltmeter	REF 5V	INITIAL TEST MODE	Pd	TP REF5V	(TP AG)	VR14	+5.000V ± 5mV
2	↓	D/A offset	Push Ⓓ	0-	TP3		VR13	0.000V ± 5mV
3	Oscilloscope 0.02 v/div 2 ms/div	VCA offset	Push ①	1-	TP2-1		VR6A	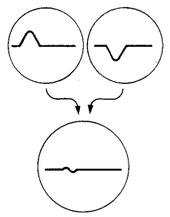
	↓				TP2-2		VR1A	
					TP2-3		VR6B	
					TP2-4		VR1B	
					TP2-5		VR6C	
					TP2-6		VR1C	
4	Oscilloscope 1 v/div 1 ms/div	VCF Resonance	Push ②	2-	TP1-1		VR10A	4.8Vp-p
					TP1-2		VR5A	
					TP1-3		VR10B	
					TP1-4		VR5B	
					TP1-5		VR10C	
					TP1-6		VR5C	
5	↓	VCA Gain			TP2-1		VR7A	6.0Vp-p 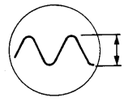
					TP2-2		VR2A	
					TP2-3		VR7B	
					TP2-4		VR2B	
					TP2-5		VR7C	
					TP2-6		VR2C	
6	Frequency counter (Tuner)	VCF Frequency			TP1-1		VR8A	263Hz ± 1.5Hz (C4 note ± 10 cent)
	↓				TP1-2		VR3A	
					TP1-3		VR8B	
					TP1-4		VR3B	
					TP1-5		VR8C	
					TP1-6		VR3C	
7		VCF Width	Push ③	3-	TP1-1		VR9A	1051Hz ± 6Hz (C6 note ± 10 cent)
					TP1-2		VR4A	
					TP1-3		VR9B	
					TP1-4		VR4B	
					TP1-5		VR9C	
					TP1-6		VR4C	

Items 6 and 7 interact. Repeat both items until satisfactory results are obtained.
項目6、7は相互に影響します。項目6、7が共にあうまで調整をくり返して下さい。

8	Oscilloscope 1 v/div	⊓⊔ duty cycle 50%	Push ④	4-	TP2-1	(TPAG)	VR12	50% ± 2% 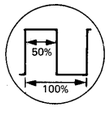
	↓				TP2-3		VR11	
					TP2-2 TP2-4 TP2-5 TP2-6		Check	
9		⊓⊔ duty cycle 95%	Push Ⓖ consecutively 2 times Ⓖボタンを2回押す		TP2-1 TP2-2 TP2-3 TP2-4 TP2-5 TP2-6			95% ± 3% 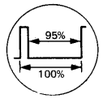
10	Oscilloscope 1 v/div 1 ms/div	⟋ level (Range)	Push ⑤	5-	TP2-1 TP2-2 TP2-3 TP2-4 TP2-5 TP2-6			4.8Vp-p ± 0.5V 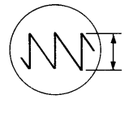

	MEASURING INSTRUMENT	ITEM	MODE/CONTROL	DIS-PLAY	TEST POINT (GND)		ADJUST/ CHECK for	READING
10	Oscilloscope 1 v/div 1 ms/div	⟋ level (Range)	Push Ⓖ consecutively 2 times Ⓖボタンを2回押す	5-	TP2-1 TP2-2 TP2-3 TP2-4 TP2-5 TP2-6	(TPAG)	Check	4.8Vp-p ± 0.5V 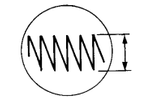
	↓		Push Ⓖ		TP2-1 TP2-2 TP2-3 TP2-4 TP2-5 TP2-6			4.8Vp-p ± 0.5V 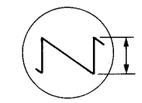
11		⟋ level (Key scale)	Push ⑥	6-	TP2-1 TP2-2 TP2-3 TP2-4 TP2-5 TP2-6			4.8Vp-p ± 0.5V 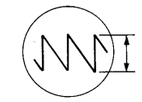
			Push Ⓖ		TP2-1 TP2-2 TP2-3 TP2-4 TP2-5 TP2-6			4.8Vp-p ± 0.8V 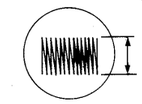
	Oscilloscope 1 v/div 2 ms/div		Push Ⓖ consecutively 2 times Ⓖボタンを2回押す		TP2-1 TP2-2 TP2-3 TP2-4 TP2-5 TP2-6			4.8Vp-p ± 0.5V
12	Oscilloscope 1 v/div	⊓⊔ duty cycle 50% (Key scale)	Push ⑦	7-	TP2-1 TP2-2 TP2-3 TP2-4 TP2-5 TP2-6			50% ± 2% 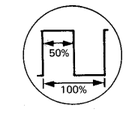
	↓		Push Ⓖ		TP2-1 TP2-2 TP2-3 TP2-4 TP2-5 TP2-6			50% ± 10% 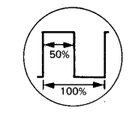
			Push Ⓖ consecutively 2 times Ⓖボタンを2回押す		TP2-1 TP2-2 TP2-3 TP2-4 TP2-5 TP2-6			50% ± 5% 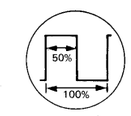
13	Oscilloscope 1 v/div 1 ms/div	Sub OSC. level	Push ⑧	8-	TP2-1 TP2-2 TP2-3 TP2-4 TP2-5 TP2-6			0Vp-p 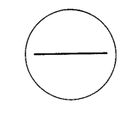

	MEASURING INSTRUMENT	ITEM	MODE/CONTROL	DIS-PLAY	TEST POINT (GND)	(TP AG)	ADJUST/ CHECK for	READING
13	Oscilloscope 1 v/div 1 ms/div	Sub OSC. level	Push Ⓖ	8-	TP2-1 TP2-2 TP2-3 TP2-4 TP2-5 TP2-6		Check	1.5Vp-p ± 0.1V
			Push Ⓖ		TP2-1 TP2-2 TP2-3 TP2-4 TP2-5 TP2-6			3.5Vp-p ± 0.2V
			Push Ⓖ		TP2-1 TP2-2 TP2-3 TP2-4 TP2-5 TP2-6			5.5Vp-p ± 0.3V
14		NOISE ON/OFF	Push ⑨	9-	TP2-1 TP2-2 TP2-3 TP2-4 TP2-5 TP2-6			0Vp-p
			Push Ⓖ		TP2-3 TP2-4 TP2-5 TP2-6			
					TP2-1 TP2-2			Approx. 3Vp-p
15	Oscilloscope 1 v/div 1 ms/div	⟋ level	Push Ⓒ	01	MIX OUTPUT L HOT (MIX OUTPUT L COLD)			3.8Vp-p ± 0.4V
			Push Ⓖ	02				
			Push Ⓖ	03				2.4Vp-p ± 0.3V
			Push Ⓖ	04				
			Push Ⓖ	05				
			Push Ⓖ	06				
16		⊓⊔ level	Push Ⓘ	11				3Vp-p ± 0.3V
			Push Ⓖ	12				

	MEASURING INSTRUMENT	ITEM	MODE/CONTROL	DIS-PLAY	TEST POINT (GND)	ADJUST/ CHECK for	READING
16	Oscilloscope 1 v/div 1 ms/div	⊓⊔ level	Push Ⓖ	13	MIX OUTPUT L HOT (MIX OUTPUT L COLD)	Check	2.0Vp-p ± 0.2V
			Push Ⓖ	14			
			Push Ⓖ	15			
			Push Ⓖ	16			
17	Oscilloscope 1 v/div 0.5 ms/div	PWM LFO	Push ②	21			LFO modulation should be applied. LFOモジュレーションがかかっていること。
			Push Ⓖ	22			
			Push Ⓖ	23			
			Push Ⓖ	24			
			Push Ⓖ	25			
			Push Ⓖ	26			
18	Oscilloscope 1 v/div 20 ms/div	VCF low frequency	Push ③	31			150ms ± 20ms 4Vp-p ± 1V
			Push Ⓖ	32			
			Push Ⓖ	33			150ms ± 20ms 2.7Vp-p ± 0.5V
			Push Ⓖ	34			
			Push Ⓖ	35			
			Push Ⓖ	36			
19	Oscilloscope 0.5V/div 5 μs/div	VCF high frequency	Push ④	41			20μs ± 5μs 2.5Vp-p ± 0.5V
			Push Ⓖ	42			
			Push Ⓖ	43			20μs ± 5μs 1.7Vp-p ± 0.5V
			Push Ⓖ	44			
			Push Ⓖ	45			
			Push Ⓖ	46			

3. MAIN BOARD (BASS BLOCK)

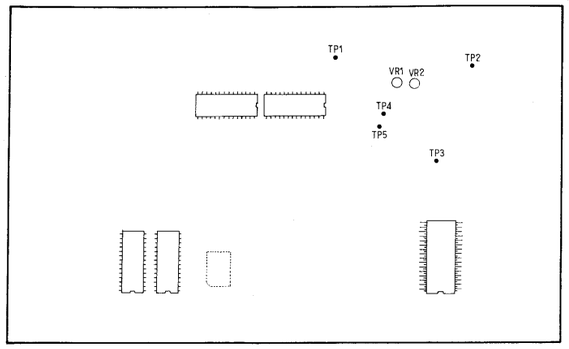

<Fig. 5 Main Board>

The Program runs only in the TEST MODE. Proceed in numerical order.
この調査、検査はテスト・モードでのみ行なえます。項目1から9まで順番に進んでください。

	MEASURING INSTRUMENT	ITEM	MODE/CONTROL	DIS-PLAY	TEST POINT (GND)		ADJUST/ CHECK for	READING
1	Oscilloscope 0.2 v/div 2 ms/div	VCA offset	Push Ⓑ	60	TP5	(TP1)	VR1	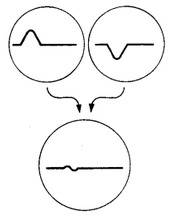
2	Oscilloscope 2 v/div 0.5 s/div	ENV Attack time	Push ① Holding down Ⓔ	61	TP4	↓	VR2	2.5S 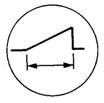
3	Oscilloscope 2 v/div 10 ms/div	VCF low frequency	Push ②	62	TP5	↓	Check	75ms ± 25ms 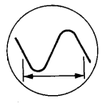
4	Oscilloscope 2 v/div 5 μs/div	VCF high frequency	Push ③	63	↓	↓	↓	25μs ± 10μs 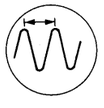
5	Oscilloscope 2 v/div 1 ms/div	VCF ENV/ Dynamics (40H)	Push ④	64	↓	↓	↓	5ms ± 3ms 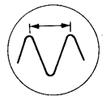
6	Oscilloscope 2 v/div 20 μs/div	VCF ENV/ Dynamics (7FH)	Push ⑤	65	↓	↓	↓	120μs ± 60μs 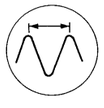
7	Oscilloscope 1 v/div 2 ms/div	VCA level	Push ⑥	66	TP5	(TP1)	Check	4Vp-p ± 0.5V 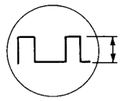
8	Oscilloscope 2 v/div 0.5ms/div	VCF Width	Push ⑦	67	↓	↓	Oscilloscope Time variable knob	10 div 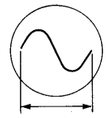
	↓	↓	Push ⑧	68	↓	↓	Check	4.5div ± 1.5div
9	Oscilloscope 1 v/div 2 ms/div	VCA level	Push ⑥	66	MIX OUTPUT L HOT (MIX OUTPUT L COLD)		↓	2.2Vp-p ± 0.4V 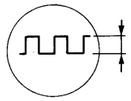

4. JACK BOARD

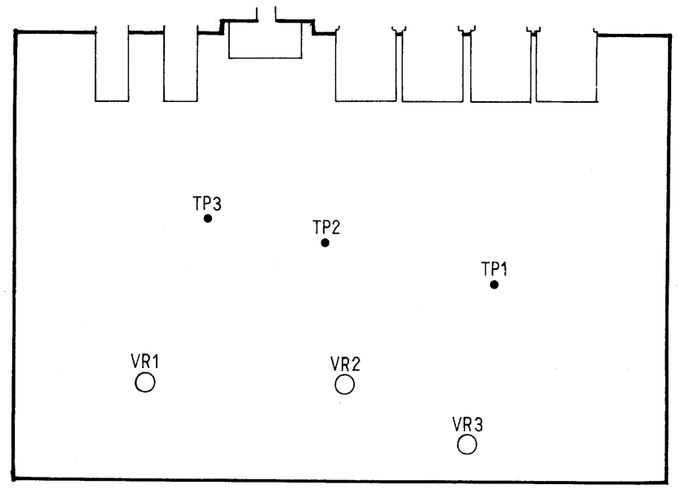

<Fig. 6 Jack Board>

a) BBD Bias 1

Setting: (with NORMAL MODE)

1. Set the tone color of MELODY block to No. 99.
2. Set into Engineer Mode of the MELODY block.
3. Select VCF Resonance (06), and then move DYNAMICS SENS to get the value 127.
4. Select VCA Level (10), and then move DYNAMICS SENS to get the value 127.
5. Select ENV Sustain (13), and then move DYNAMICS SENS to get the value 127.
6. Select the VCF Cut-off frequency (05), and then move DYNAMICS SENS to get the value 75.

Test instrument:

Oscilloscope 2V/div. 0.1 mS/div.

Test point:

TP1, GND – Module Board AG

Adjustment:

While holding down the Button D, adjust VR3 for a 50% duty cycle.

a) BBD Bias 1 :

セッティング：(ノーマル・モード)

1．メロディー・ブロックの音色を99番にします。
2．メロディー・ブロックのエンジニア・モードに入ります。
3．VCF レゾナンス (06)を選びダイナミクス・センシティビティー・ツマミで設定値を127にします。
4．VCA レベル (10) を選びダイナミクス・センシティビティー・ツマミで設定値を 127にします。
5．ENV サスティーン (13) を選びダイナミクス・センシティビティー・ツマミで設定値を 127 にします。
6．VCF カットオフ・フレケンシー (05) を選びダイナミクス・センシティビティー・ツマミで75にします。

使用機器：

オシロ・スコープ 2 V/div 0.1ms/div

テスト・ポイント：

TP 1 (GND：モジュール・ボード AG)

調整方法：

ボタンⒹを押したまま波形のデューティー・サイクルが50%になるようにVR 3で調整します。

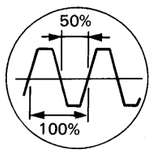

b) BBD Bias 2, 3

Setting:

1. Set the tone color of the CHORD block to No. 99.
2. Set into Engineer Mode of the CHORD block.
3. Select VCF Resonance (06), and then move DYNAMICS SENS to get the value 127.
4. Select VCA Level (10), and then move DYNAMICS SENS to get the value 127.
5. Select ENV Sustain (13), and then move DYNAMICS SENS to get the value 127.
6. Select VCF cut-off frequency (05), and then move DYNAMICS SENS to get the value 75.

Test instrument:

Oscilloscope 2V/div. 0.1mS/div.

Test point:

BBD Bias 2 – TP2, GND – Module Board AG
BBD Bias 3 – TP3, GND – Module Board AG

Adjustment:

BBD Bias 2:
While holding down the Button C, adjust VR2 for a 50% duty cycle.

BBD Bias 3:
While holding down the Button C, adjust VR1 for a 50% duty cycle.

b) BBD Bias 2、3

セッティング：

1．コード・ブロックの音色を99番にします。
2．コード・ブロックのエンジニア・モードに入ります。
3．VCF レゾナンス (06) を選びダイナミクス・センシティビティー・ツマミで設定値を 127 にします。
4．VCA レベル (10) を選びダイナミクス・センシティビティー・ツマミで設定値を 127 にします。
5．ENV サスティーン (13) を選びダイナミクス・センシティビティー・ツマミで設定値を 127 にします。
6．VCF カットオフ・フレケンシー (05) を選びダイナミクス・センシティビティー・ツマミで75にします。

使用機器：

オシロ・スコープ 2 V/div 0.1ms/div

テスト・ポイント：

BBD Bias 2 ：TP 2 (GND；モジュール・ボードAG)
BBD Bias 3 ：TP 3 (GND：モジュール・ボードAG)

調整方法：

BBD Bias 2 ：
ボタンⒸを押したまま波形のデューティー・サイクルが50%になるようにVR 2で調整します。

BBD Bias 3 ：
ボタンⒸを押したまま波形のデューティー・サイクルが50%になるようにVR 1で調整します。

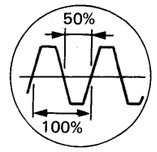

The Program runs only in the TEST MODE. Proceed in numerical order.
この調整、検査はテスト・モードでのみ行なえます。項目1から2まで順番に進んでください。

	MEASURING INSTRUMENT	ITEM	MODE/CONTROL	DIS-PLAY	TEST POINT (GND)	ADJUST/ CHECK for	READING
1		HPF	INITIAL TEST MODE	Rd			
			Push Ⓒ	01			
	Oscilloscope 1 v/div 2 ms/div		Push ⑤	51	MIX OUTPUT L HOT (MIX OUTPUT L COLD)	Check	4Vp-p ± 0.8V 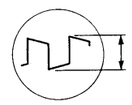
			Push Ⓖ consecutively 2 times	52			
			Push Ⓖ consecutively 2 times	53			2.5Vp-p ± 0.4V 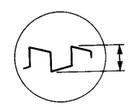
			Push Ⓖ consecutively 2 times	54			
			Push Ⓖ consecutively 2 times	55			
			Push Ⓖ consecutively 2 times	56			

	MEASURING INSTRUMENT	ITEM	MODE/CONTROL	DIS-PLAY	TEST POINT (GND)	ADJUST/ CHECK for	READING
1	Oscilloscope 1 v/div 2 ms/div	HPF	Push Ⓖ consecutively 3 times	51	MIX OUTPUT L HOT (MIX OUTPUT L COLD)	Check	5.5$V_{p\text{-}p}$ ± 1.5V
			Push Ⓖ consecutively 2 times	52			
			Push Ⓖ consecutively 2 times	53			3.6$V_{p\text{-}p}$ ± 0.8V 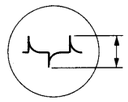
			Push Ⓖ consecutively 2 times	54			
			Push Ⓖ consecutively 2 times	55			
			Push Ⓖ consecutively 2 times	56			
2		CHORUS	Push ⑥	61			4$V_{p\text{-}p}$ ± 0.8V 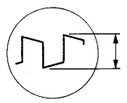
			Push Ⓖ				Approx. 6$V_{p\text{-}p}$ 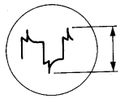
			Push Ⓖ consecutively 3 times	63			2.5$V_{p\text{-}p}$ ± 0.4V 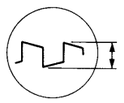
			Push Ⓖ				Approx. 4$V_{p\text{-}p}$ 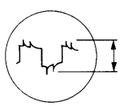

PANEL BOARD

7934717000
(pcb 22925136)

COLOR	SERIAL No.	R9-R18	C7, C8
BLACK	520100-550549	33kΩ	22pF
IVORY	540400-550249		
BLACK	560550-UP	100kΩ	10pF
IVORY	560250-UP		

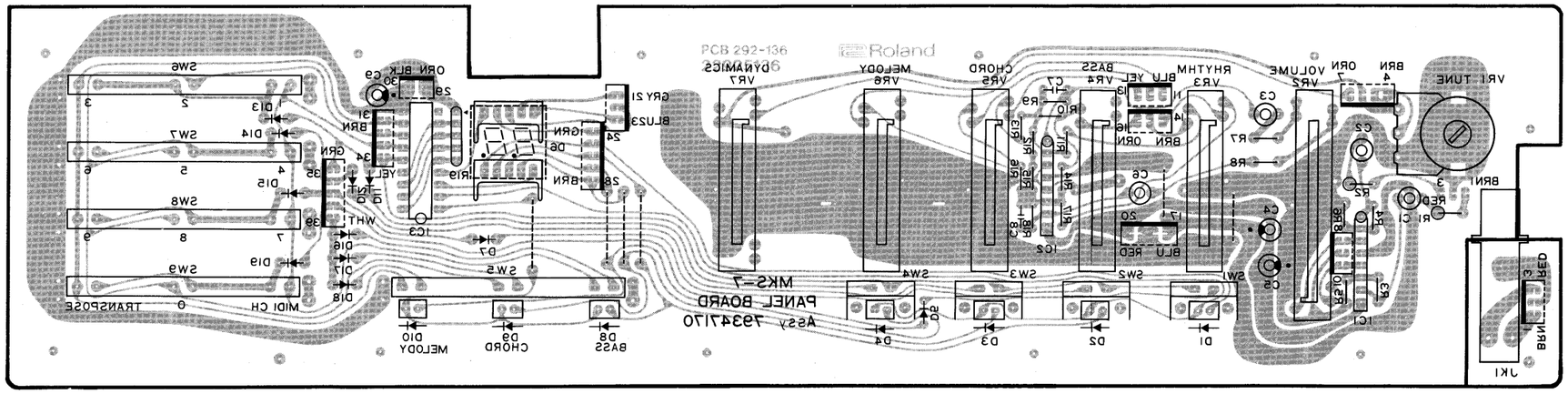

View from foil side.

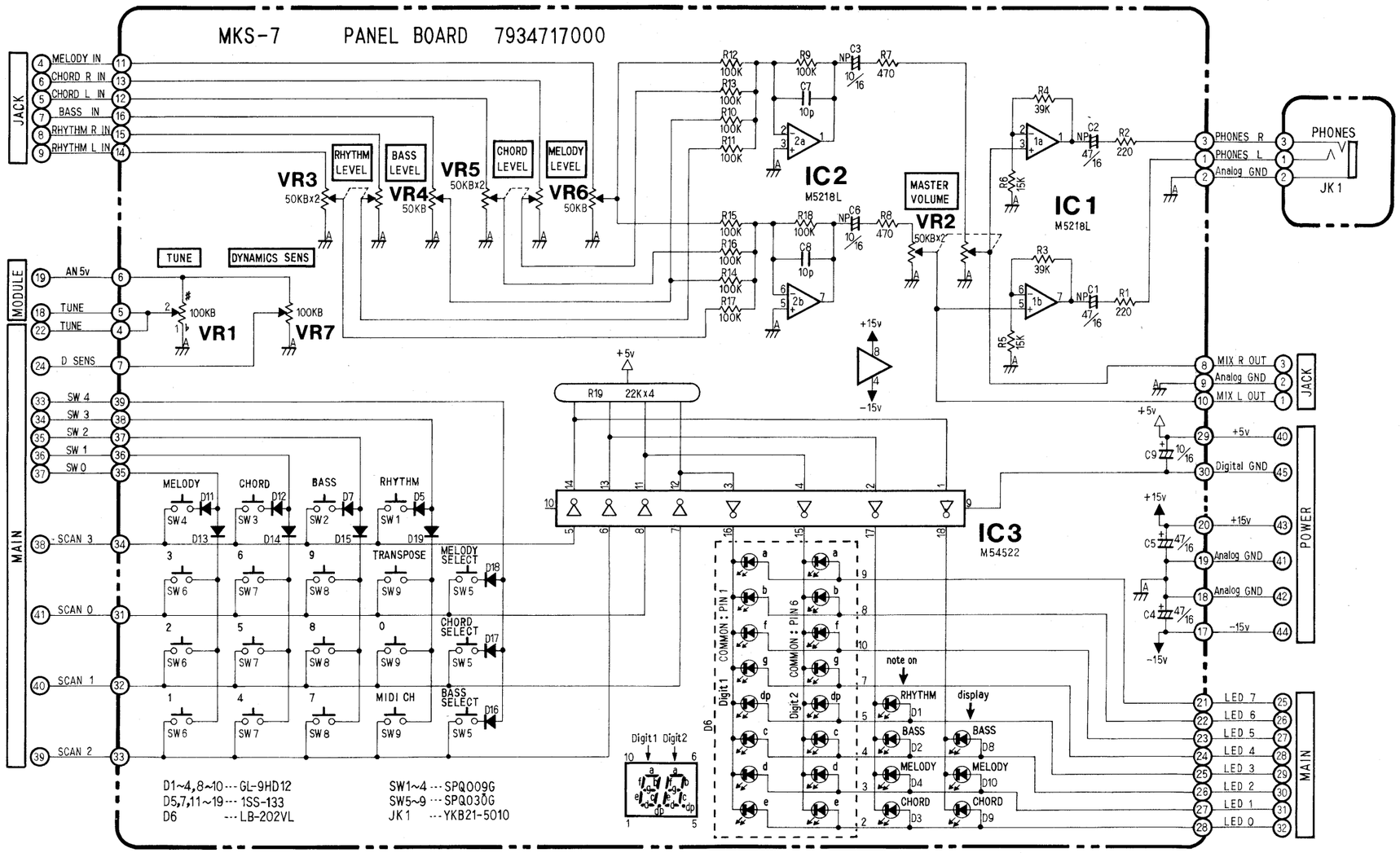

MAIN BOARD 7934710000(pcb 22925135)

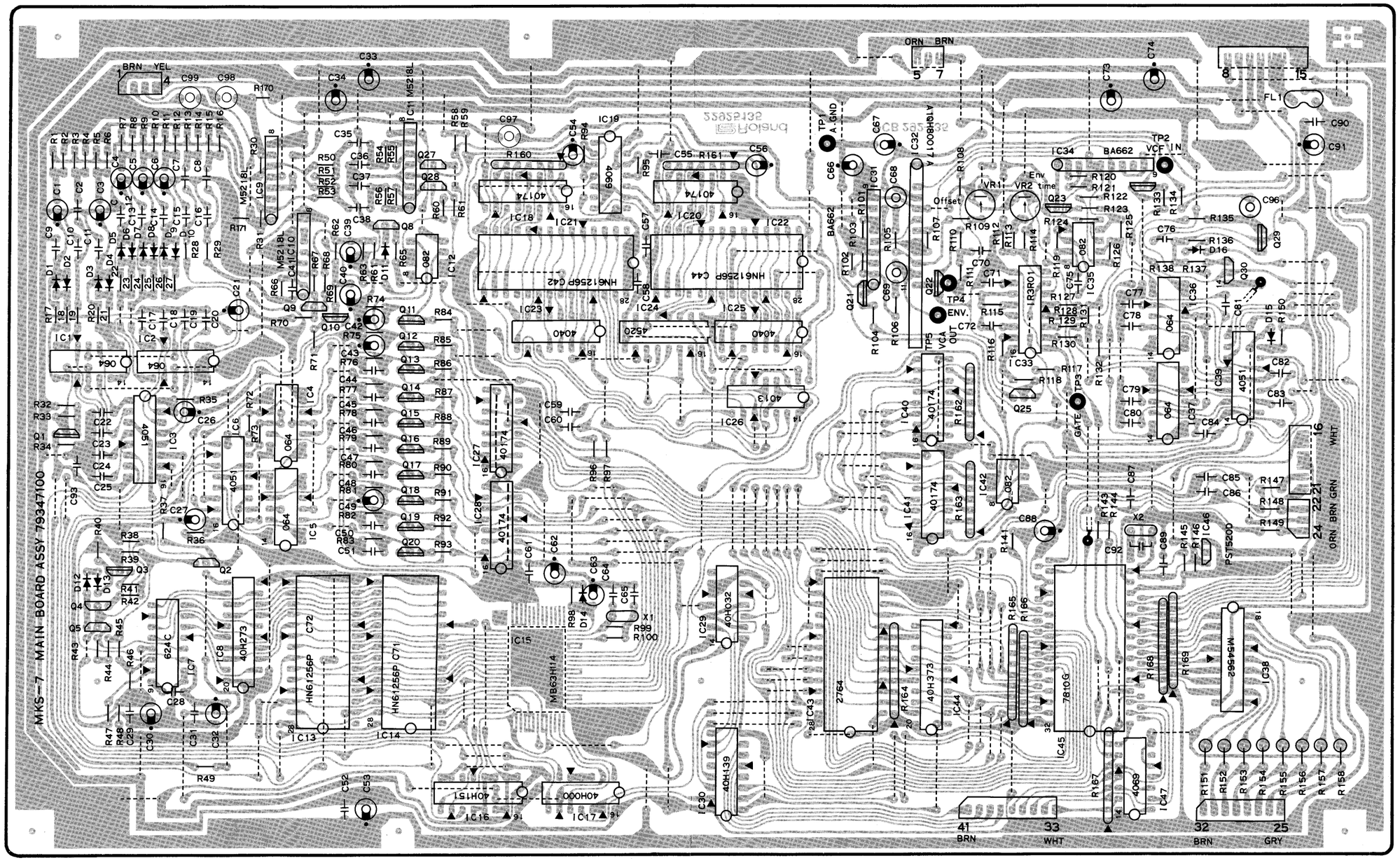

View from component side.

POWER SUPPLY BOARD

7934706100 100/117V(pcb 22925137)
7934706400 220/240V(pcb 22925137)

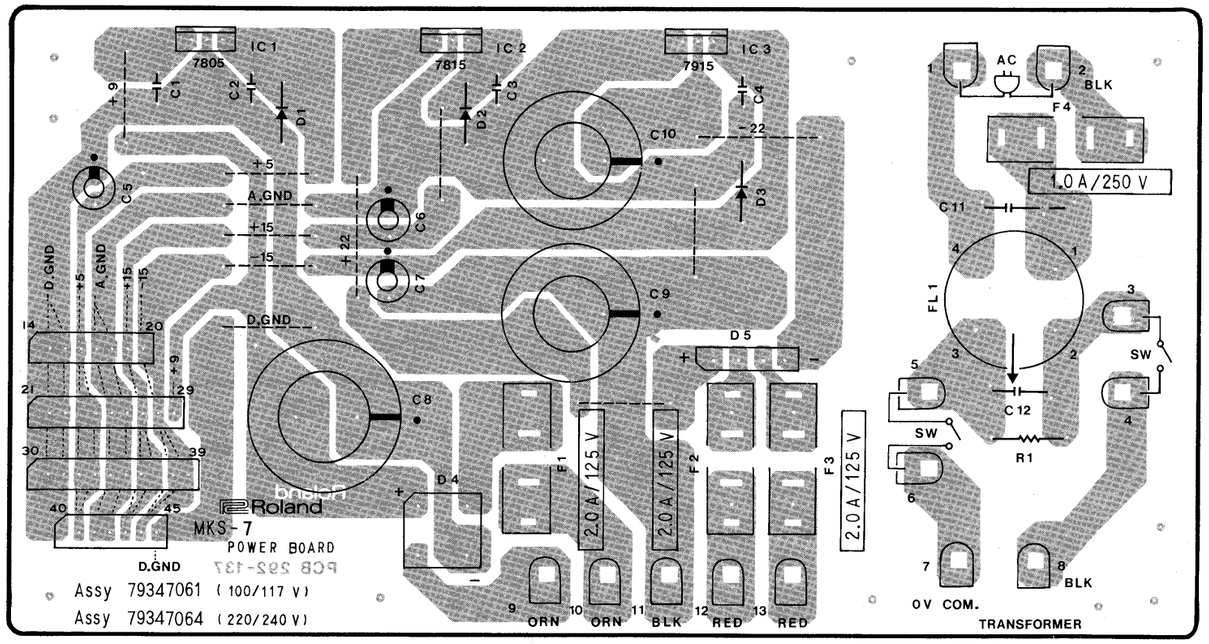

View from component side.

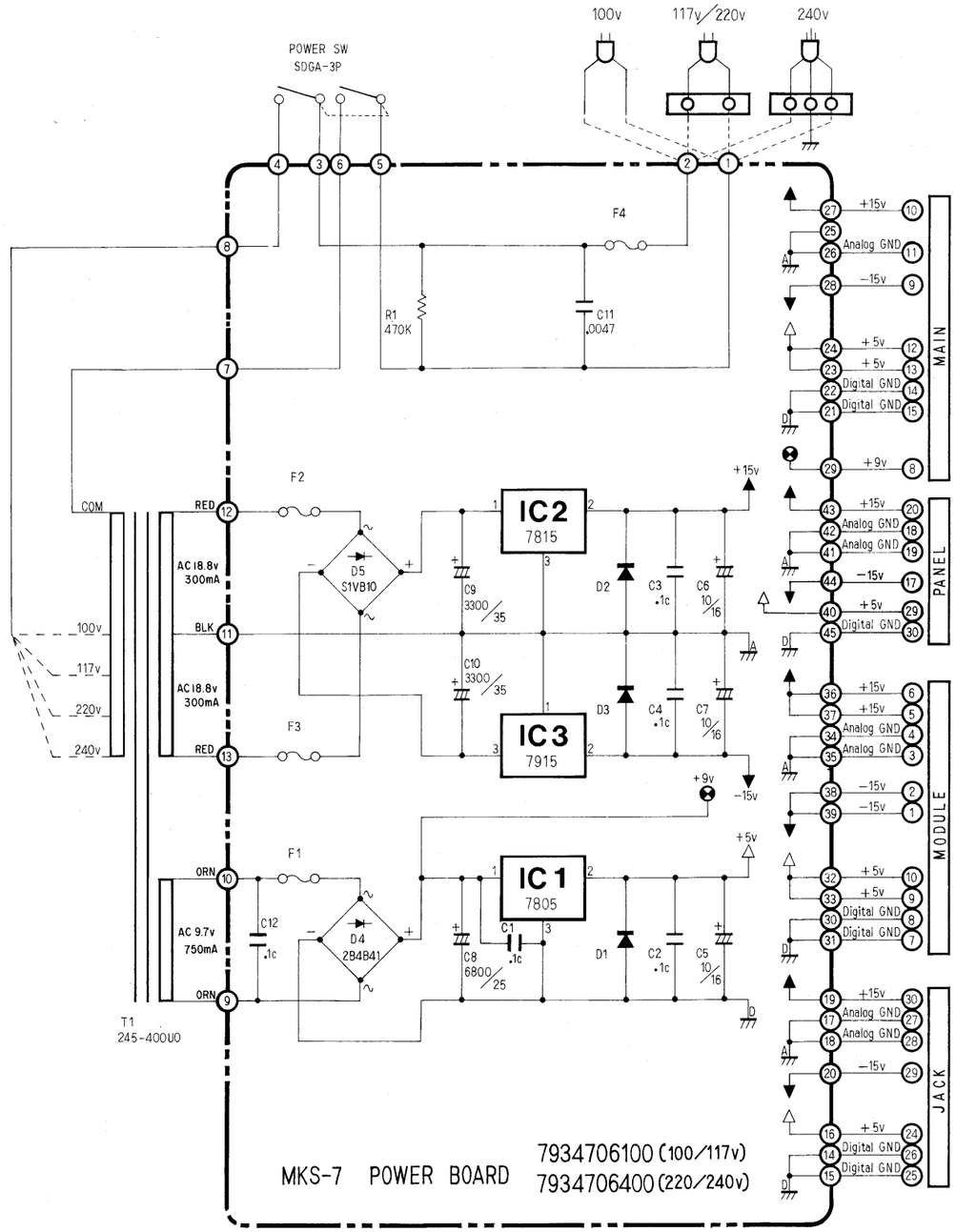

C11	DE7150472MVA1	F1~3	2A 125V	(100V/117V)
			T1A 250V	(220V/240V)
		F4	1A 250V	(100V/117V)
			T315mA 250V	(220V/240V)
D1~3	1SR35-200			

MAIN BOARD

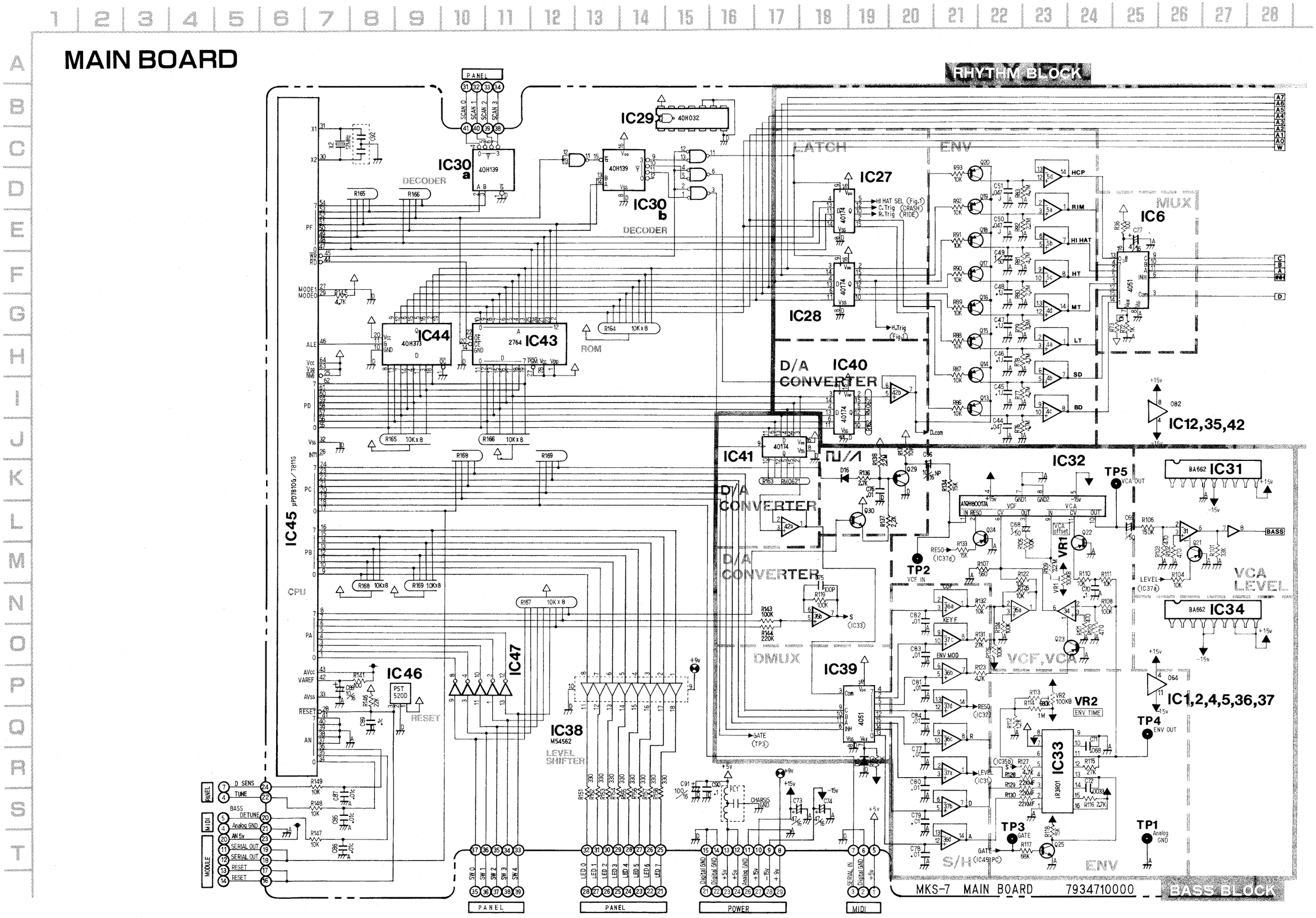
RHYTHM BLOCK
BASS BLOCK
PANEL
IC29
IC30 a
IC30 b
DECODER
IC44
IC43
ROM
IC45
CPU
IC46
IC47
IC38
LEVEL SHIFTER
IC27
IC28
LATCH
ENV
MUX
IC6
D/A CONVERTER
IC40
IC41
IC32
IC39
DMUX
VCF,VCA
IC33
S/H
IC31
IC34
VCA LEVEL
IC12,35,42
IC1,2,4,5,36,37
TP1
TP2
TP3
TP4
TP5
VR1
VR2
ENV TIME
MKS-7 MAIN BOARD 7934710000
POWER
MIDI
MODULE

MAIN BOARD

RHYTHM BLOCK

MULTIPLE ADDRESS COUNTER

IC15

MB63H114

IC17

40H000

S/H FILTER

Fig 1

DMUX

IC3

4051

ROM

IC14

HN61256P C71

IC13

HN61256P C72

D/A CONVERTER

IC16

40H151

MUX

IC8

40H273

LATCH

IC7

μPC624C

D/A CONVERTER

IC 9,10,11

M5218L

IC20

IC22

HN61256P C44

ROM

IC25

4040

4520

4013

LATCH

D/A CONVERTER

RIDE CYMBAL

IC18

IC21

HN61256P C42

ROM

IC23

4040

4520

4013

LATCH

D/A CONVERTER

CRASH CYMBAL

IC19,47

4069

IC24

4520

IC26

4013

SUM

JACK

Analog GND

RHYTHM R

RHYTHM L

BASS OUT

MKS-7 MAIN BOARD 7934710000

	CIRCUIT NUMBER	NAME
Q	1,3,10~24,29	2SA933
	2,4,5,8,25,30	2SC1740
	9,27,28	2SC945P
D	1~16	1SS133

ABSENT NUMBER
C : 94, 95
R : 139, 140, 142, 159
Q : 6, 7, 26

LAST NUMBER	
R171	IC47
C99	Q30
D16	VR2

MODULE BOARD 7934708000(pcb 22925118)

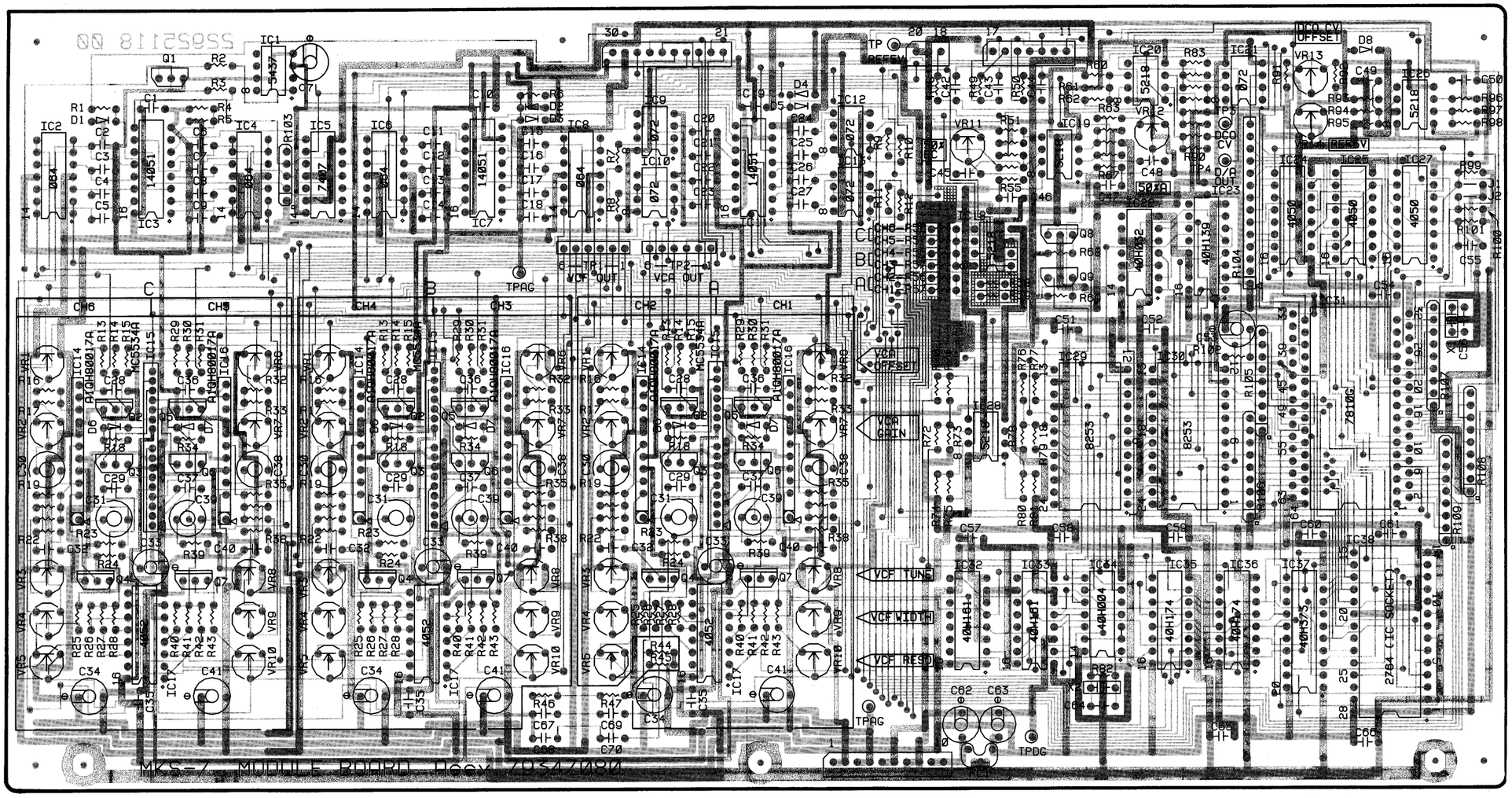

View from component side.

MODULE BOARD

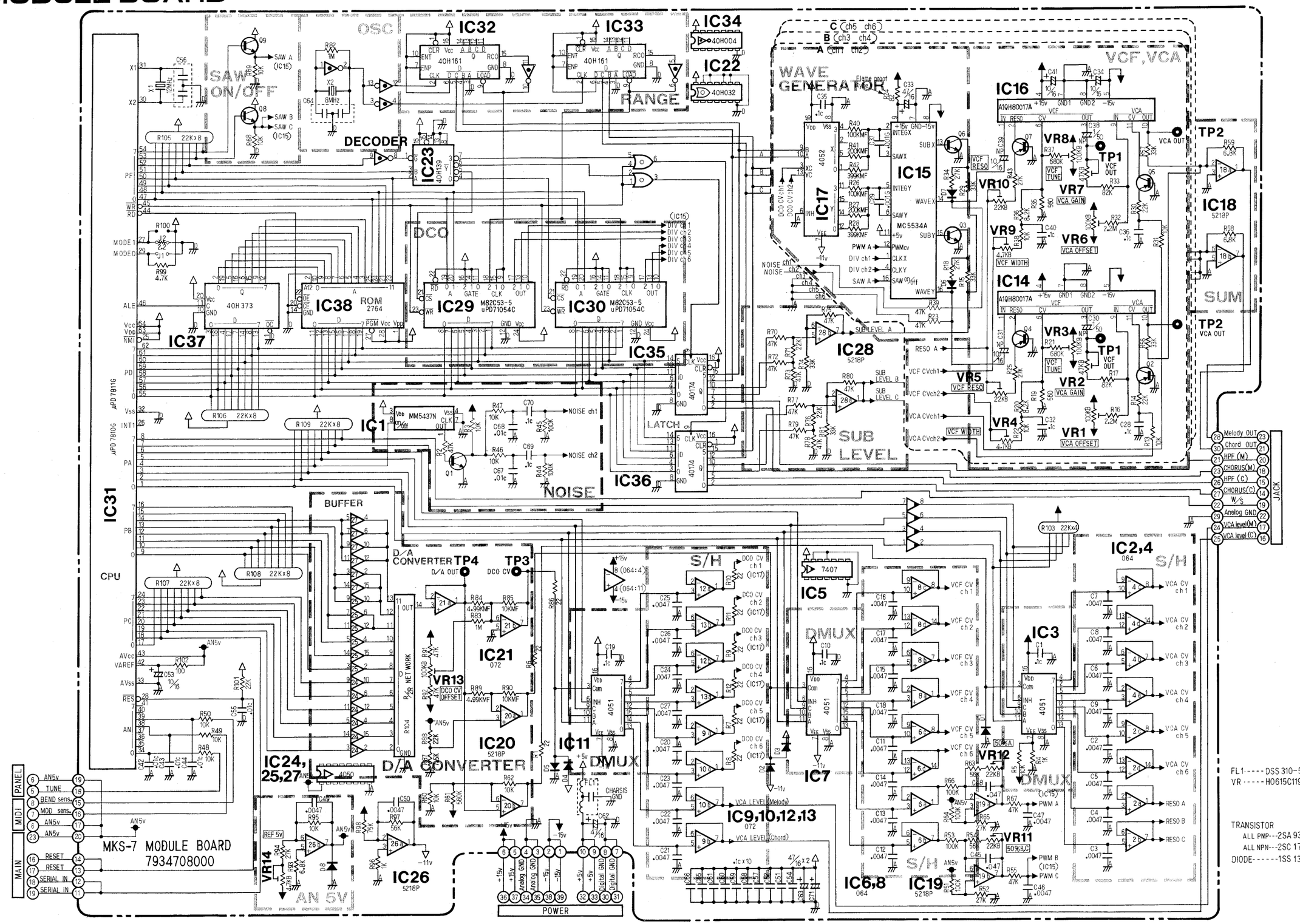

MIDI BOARD 7934714000(pcb 22925135)

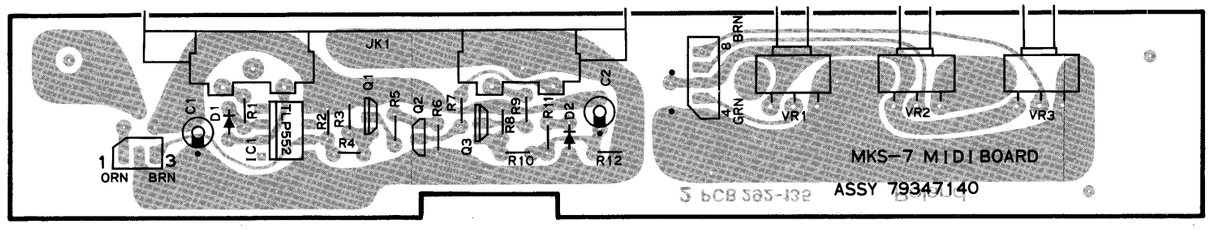

View from component side.

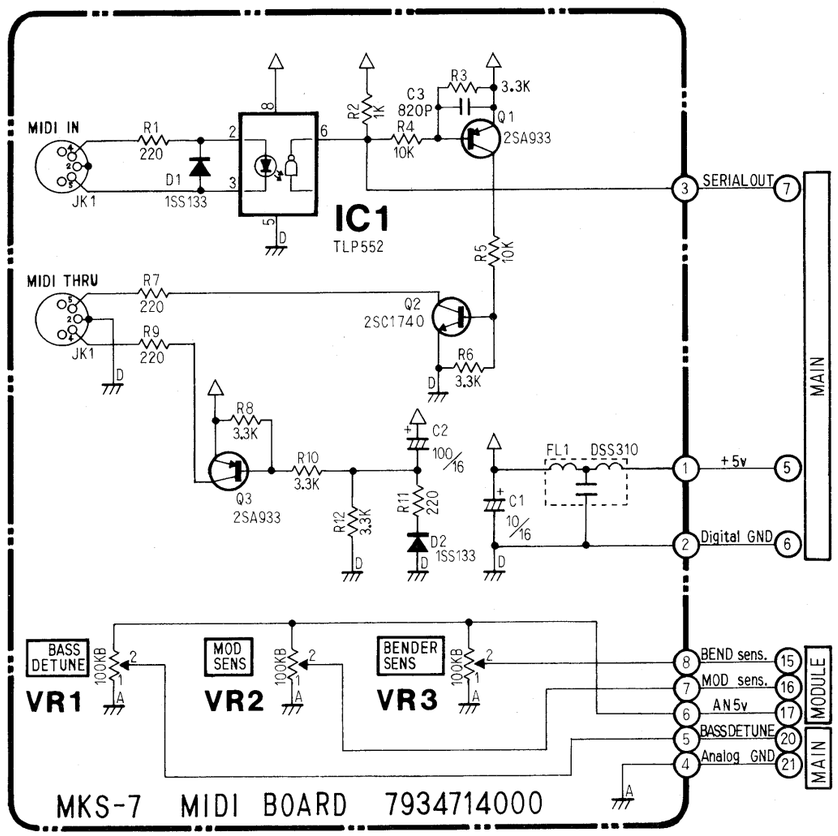

JACK BOARD 7934712000(pcb 22925135)

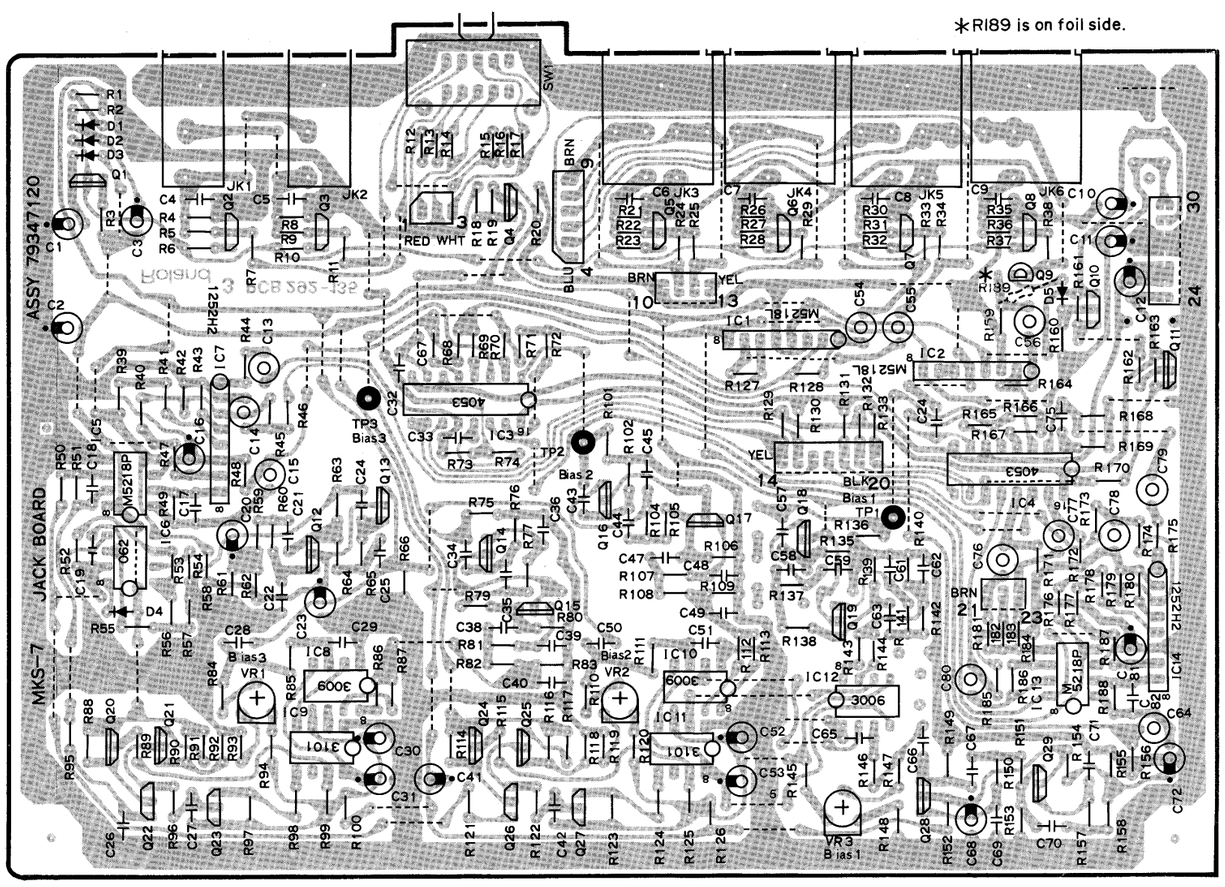

View from component side.

JACK BOARD

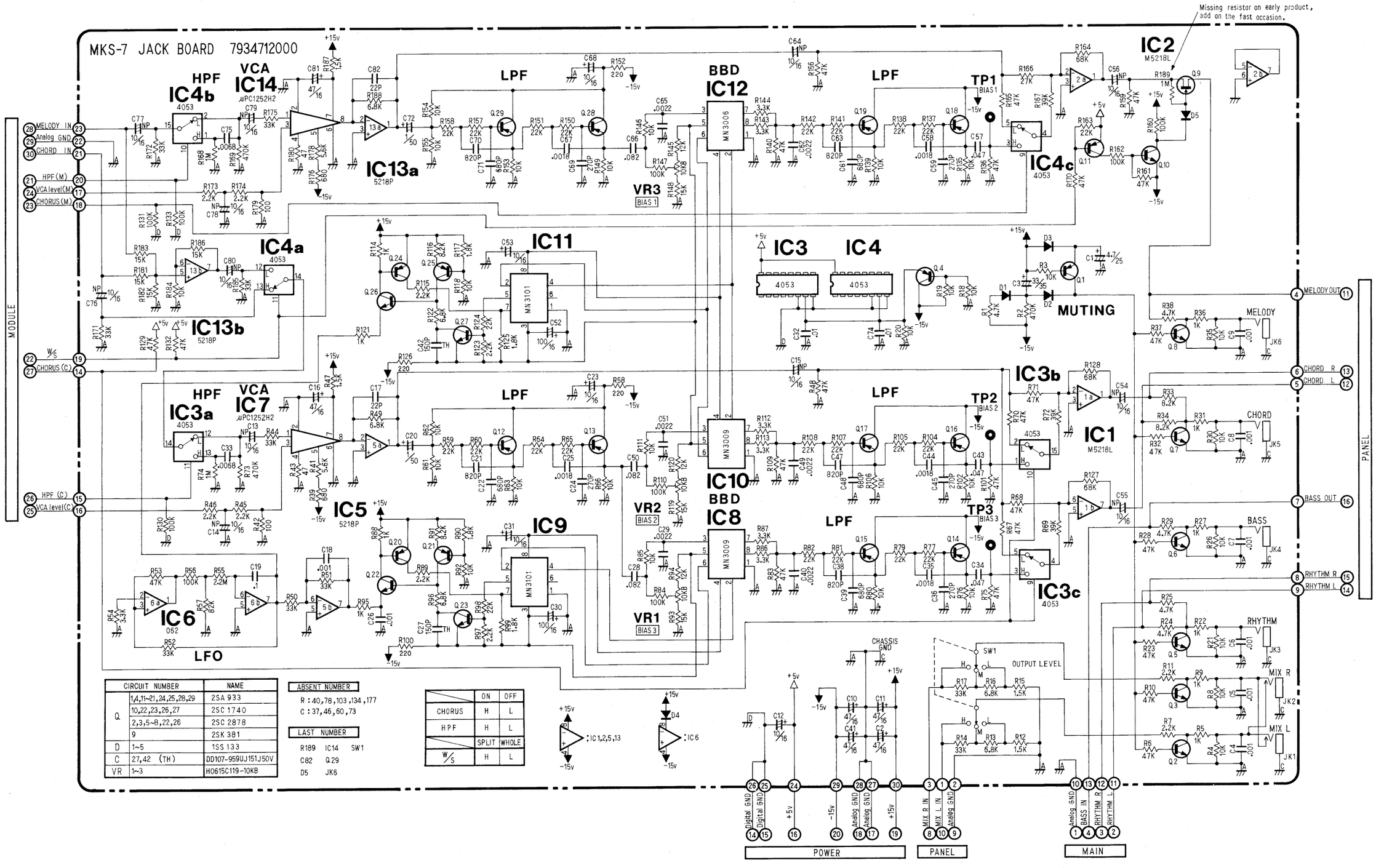

CIRCUIT NUMBER		NAME
Q	1,4,11~21,24,25,28,29	2SA 933
	10,22,23,26,27	2SC 1740
	2,3,5~8,22,26	2SC 2878
	9	2SK 381
D	1~5	1SS 133
C	27,42 (TH)	DD107-9590J151J50V
VR	1~3	H0615C119-10KB

ABSENT NUMBER
R : 40,78,103,134,177
C : 37,46,60,73

LAST NUMBER

R189	IC14	SW1
C82	Q29	
D5	JK6	

	ON	OFF
CHORUS	H	L
HPF	H	L
	SPLIT	WHOLE
W/S	H	L

: IC1,2,5,13

: IC6

Sound module

MODEL **MKS-7 MIDI Implementation Chart**

Melody Block

Function.....		Transmitted	Recognized	Remarks
Basic	Default	×	1	
Channel	Changed	×	1 – 16	
Mode	Default	×	Mode 3	
	Messages	×	×	
	Altered	**********	×	
Note		×	0 – 127	
Number	True voice	**********	24 – 108	
Velocity	Note ON	×	○	
	Note OFF	×	×	
After	Key's	×	×	
Touch	Ch's	×	×	
Pitch Bender		×	○	
Control Change	1	×	○	Modulation
	64	×	○	Hold
Prog Change	True #	× **********	○ (0–127) 0 – 99	
System Exclusive		×	○	Tone parameters
System	Song Pos	×	×	
	Song Sel	×	×	
Common	Tune	×	×	
System	Clock	×	×	
Real Time	Commands	×	×	
Aux	Local ON/OFF	×	×	
	All Notes OFF	×	○ (123–127)	
Mes-	Active Sense	×	○	
sages	Reset	×	×	
Notes		When the CHORD block is in 6 voice mode, the MELODY block cannot sound.		

Mode 1 : OMNI ON, POLY Mode 2 : OMNI ON, MONO ○ : Yes
Mode 3 : OMNI OFF, POLY Mode 4 : OMNI OFF, MONO × : No

Chord Block

Function.....		Transmitted	Recognized	Remarks
Basic	Default	×	3	
Channel	Changed	×	1 – 16	
Mode	Default	×	Mode 3	
	Messages	×	×	
	Altered	**********	×	
Note		×	0 – 127	
Number	True voice	**********	24 – 108	
Velocity	Note ON	×	○	
	Note OFF	×	×	
After	Key's	×	×	
Touch	Ch's	×	×	
Pitch Bender		×	○	
Control Change	1	×	○	Modulation
	64	×	○	Hold
	121	×	○	Voice select (6/4 voices)
Prog Change	True #	× **********	○ (0–127) 0–99	
System Exclusive		×	○	Tone parameters
System	Song Pos	×	×	
	Song Sel	×	×	
Common	Tune	×	×	
System	Clock	×	×	
Real Time	Commands	×	×	
Aux	Local ON/OFF	×	×	
	All Notes OFF	×	○ (123–127)	
Mes-	Active Sense	×	○	
sages	Reset	×	×	
Notes				

Mode 1 : OMNI ON, POLY Mode 2 : OMNI ON, MONO ○ : Yes
Mode 3 : OMNI OFF, POLY Mode 4 : OMNI OFF, MONO × : No

Bass Block

Function.....		Transmitted	Recognized	Remarks
Basic Channel	Default	×	2	
	Changed	×	1 – 16	
Mode	Default	×	Mode 4	
	Messages	×	×	
	Altered	**********	×	
Note Number		×	0 – 127	The actual keys are 1 octave lower.
	True voice	**********	31 – 96	
Velocity	Note ON	×	○	
	Note OFF	×	×	
After Touch	Key's	×	×	
	Ch's	×	×	
Pitch Bender		×	×	
Control Change				
Prog Change	True #	× **********	○ (0–127) 0–19	
System Exclusive		×	○	Tone parameters
System Common	Song Pos	×	×	
	Song Sel	×	×	
	Tune	×	×	
System Real Time	Clock	×	×	
	Commands	×	×	
Aux Mes-sages	Local ON/OFF	×	×	
	All Notes OFF	×	○ (123–127)	
	Active Sense	×	○	
	Reset	×	×	
Notes				

Mode 1 : OMNI ON, POLY Mode 2 : OMNI ON, MONO ○ : Yes
Mode 3 : OMNI OFF, POLY Mode 4 : OMNI OFF, MONO × : No

Rhythm Block

Function.....		Transmitted	Recognized	Remarks
Basic Channel	Default	×	10	
	Changed	×	1 – 16	
Mode	Default	×	Mode 3	
	Messages	×	×	
	Altered	**********	×	
Note Number		×	35 – 51	
	True voice	**********	35 – 51	
Velocity	Note ON	×	○	
	Note OFF	×	×	
After Touch	Key's	×	×	
	Ch's	×	×	
Pitch Bender		×	×	
Control Change				
Prog Change	True #	× **********	×	
System Exclusive		×	×	
System Common	Song Pos	×	×	
	Song Sel	×	×	
	Tune	×	×	
System Real Time	Clock	×	×	
	Commands	×	×	
Aux Mes-sages	Local ON/OFF	×	×	
	All Notes OFF	×	×	
	Active Sense	×	×	
	Reset	×	×	
Notes		Note # to instruments assignment. 35,36 – Bass Dr 48,50 – Hi Tom 46 – Opn HH 38,40 – Snr Dr 37 – Rim Sht 49 – Crsh Cym 41,43 – Low Tom 39 – Hnd Clp 51 – Ride Cym 45,47 – Mid Tom 42,44 – Cls HH		

Mode 1 : OMNI ON, POLY Mode 2 : OMNI ON, MONO ○ : Yes
Mode 3 : OMNI OFF, POLY Mode 4 : OMNI OFF, MONO × : No

Sound module

MODEL MKS-7 MIDI Implementation

1. RECOGNIZED RECEIVE DATA

1.1 MELODY part

When the CHORD part is in 6 voice mode, the MELODY part is not available.

Status	Second	Third	Description	
1000 nnnn	0kkk kkkk	0vvv vvvv	Note OFF, velocity ignored	
1001 nnnn	0kkk kkkk	0000 0000	Note OFF kkkkkkk = 0 - 127 (24 - 108)	*1
1001 nnnn	0kkk kkkk	0vvv vvvv	Note ON kkkkkkk = 0 - 127 (24 - 108) vvvvvvv = 1 - 127	*1
1011 nnnn	0000 0001	0vvv vvvv	Modulation vvvvvvv = 0 - 127	
1011 nnnn	0100 0000	0111 1111	Hold ON (1 - 126 ignored)	
1011 nnnn	0100 0000	0000 0000	Hold OFF	
1011 nnnn	0111 1011	0000 0000	ALL NOTES OFF	*2
1011 nnnn	0111 1100	0000 0000	ALL NOTES OFF	*2
1011 nnnn	0111 1101	0000 0000	ALL NOTES OFF	*2
1011 nnnn	0111 1110	0000 mmmm	ALL NOTES OFF (m : ignored)	*2
1011 nnnn	0111 1111	0000 0000	ALL NOTES OFF	*2
1100 nnnn	0ppp pppp		Program Change ppppppp = 0 - 127 (0 - 99)	*3
1110 nnnn	0b00 0000	0bbb bbbb	Pitch Bender LS 6 bits are ignored	
1111 0000			Exclusive	*4
1111 0111			EOX	
1111 1110			Active Sensing	

Notes :

*1 Note numbers outside of the range 24 - 108 are transposed to the nearest octave inside this range.

*2 Mode Messages (123 - 127) are only recognized as ALL NOTES OFF.

* The receiver's mode is always OMNI OFF, POLY mode.

*3 Program Change assignments

Prog #	Number
0 - 99	0 - 99
100 - 127	0 - 27

*4 Refer to Section 2 RECOGNIZED EXCLUSIVE MESSAGES 2.2 CHORD part.

1.2 CHORD part

Status	Second	Third	Description	
1000 nnnn	0kkk kkkk	0vvv vvvv	Note OFF, velocity ignored	
1001 nnnn	0kkk kkkk	0000 0000	Note OFF kkkkkkk = 0 - 127 (24 - 108)	*1
1001 nnnn	0kkk kkkk	0vvv vvvv	Note ON kkkkkkk = 0 - 127 (24 - 108) vvvvvvv = 1 - 127	*1
1011 nnnn	0000 0001	0vvv vvvv	Modulation vvvvvvv = 0 - 127	
1011 nnnn	0100 0000	0111 1111	Hold ON (1 - 126 ignored)	
1011 nnnn	0100 0000	0000 0000	Hold OFF	
1011 nnnn	0111 1001	0111 1111	Voice select : 6 voice mode	
1011 nnnn	0111 1001	0000 0000	Voice select : 4 voice mode (1 - 126 ignored)	
1011 nnnn	0111 1011	0000 0000	ALL NOTES OFF	*2
1011 nnnn	0111 1100	0000 0000	ALL NOTES OFF	*2
1011 nnnn	0111 1101	0000 0000	ALL NOTES OFF	*2
1011 nnnn	0111 1110	0000 mmmm	ALL NOTES OFF (m : ignored)	*2
1011 nnnn	0111 1111	0000 0000	ALL NOTES OFF	*2
1100 nnnn	0ppp pppp		Program Change ppppppp = 0 - 127 (0 - 99)	*3
1110 nnnn	0b00 0000	0bbb bbbb	Pitch Bender LS 6 bits are ignored	
1111 0000			Exclusive	*4
1111 0111			EOX	
1111 1110			Active Sensing	

Notes :

*1 Note numbers outside of the range 24 - 108 are transposed to the nearest octave inside this range.

*2 Mode Messages (123 - 127) are only recognized as ALL NOTES OFF.

* The receiver's mode is always OMNI OFF, POLY mode.

*3 Program Change assignments

Prog #	Number
0 - 99	0 - 99
100 - 127	0 - 27

*4 Refer to Section 2 RECOGNIZED EXCLUSIVE MESSAGES 2.2 CHORD part.

1.3 BASS part

Status	Second	Third	Description	
1000 nnnn	0kkk kkkk	0vvv vvvv	Note OFF, velocity ignored	
1001 nnnn	0kkk kkkk	0000 0000	Note OFF kkkkkkk = 0 - 127 (19 - 96)	*1
1001 nnnn	0kkk kkkk	0vvv vvvv	Note ON kkkkkkk = 0 - 127 (19 - 96) vvvvvvv = 1 - 127	*1
1011 nnnn	0111 1011	0000 0000	ALL NOTES OFF	*2
1011 nnnn	0111 1100	0000 0000	ALL NOTES OFF	*2
1011 nnnn	0111 1101	0000 0000	ALL NOTES OFF	*2
1011 nnnn	0111 1110	0000 mmmm	ALL NOTES OFF (m : ignored)	*2
1011 nnnn	0111 1111	0000 0000	ALL NOTES OFF	*2
1100 nnnn	0ppp pppp		Program Change ppppppp = 0 - 127 (0 - 19)	*3
1111 0000			Exclusive	*4
1111 0111			EOX	
1111 1110			Active Sensing	

Notes :

*1 Note numbers outside of the range 19 - 96 are transposed to the nearest octave inside this range.

*2 Mode Messages (123 - 127) are only recognized as ALL NOTES OFF.

* The receiver's mode is always OMNI OFF, MONO mode.

*3 Program Change assignments

Prog #	Number
0 - 19	0 - 19
20 - 39	0 - 19
40 - 59	0 - 19
60 - 79	0 - 19
80 - 99	0 - 19
100 - 119	0 - 19
120 - 127	0 - 7

*4 Refer to Section 2 RECOGNIZED EXCLUSIVE MESSAGES 2.3 BASS part.

1.4 RHYTHM part

Status	Second	Third	Description	
1000 nnnn	0kkk kkkk	0vvv vvvv	Note OFF, velocity ignored	
1001 nnnn	0kkk kkkk	0000 0000	Note OFF kkkkkkk = 35 - 51	*1
1001 nnnn	0kkk kkkk	0vvv vvvv	Note ON kkkkkkk = 35 - 51 vvvvvvv = 1 - 127	*1

Notes :

* Received note number are assigned as follows:

kkkkkkk	Instrument
35,36	Bass Drum
37	Rim Shot
38,40	Snare Drum
39	Hand Clap
41,43	Low Tom
42,44	Closed Hi-Hat
45,47	Mid Tom
46	Open Hi-Hat
48,50	Hi Tom
49	Crash Cymbal
51	Ride Cymbal

Other note on numbers are ignored.

* The receiver's mode is always OMNI OFF, POLY mode.

2. RECOGNIZED EXCLUSIVE MESSAGES

2.1 MELODY part

* When changing a tone.

Byte	Description
a 1111 0000	Exclusive status
b 0100 0001	Roland ID #
c 0011 0000	Operation code = tone change mode
d 0000 nnnn	Unit # = MIDI basic channel, nnnn = 0 - 15 where nnnn + 1 = channel #
e 0xxx xxxx	Tone number xxxxxxx = 0 - 127
f 0zzz zzzz	Value zzzzzzz = 0 - 127 (18 bytes total for values)
g 1111 0111	End of Exclusive

*** Example ***

a	b	c	d	e	f	. . .	g
F0	41	30	00	00	39	2D 00 37 00 55 00 00 00	
19	34	3B	20	56	28	00 1A 18	F7

* When changing a tone parameter.

Byte	Description
a 1111 0000	Exclusive status
b 0100 0001	Roland ID #
c 0011 0010	Operation code = Tone parameter change
d 0000 nnnn	Unit # = MIDI basic channel, nnnn = 0 - 15 where nnnn + 1 = channel #
e 000y yyyy	Parameter number yyyyy = 0 - 17
f 0zzz zzzz	Value zzzzzzz = 0 - 127
g 1111 0111	End of Exclusive

*** Example ***

a	b	c	d	e	f	g
F0	41	30	02	00	03	40 F7

* Parameter number table

P #	Function	P #	Function
0	LFO rate	8	VCF LFO
1	LFO delay	9	VCF KYBD
2	DCO LFO	10	VCA level
3	DCO PWM	11	ENV attack
		12	ENV decay
5	VCF cutoff freq	13	ENV sustain
6	VCF resonance	14	ENV release
7	VCF ENV	15	Sub level

For switches

Bit / P #	6	5	4	3	2	1	0
	Function						
4	dynamics affection VCF 0=off 1=on		VCA 0=off 1=on	x	x	x	x	x
16		x	chorus 1=off 0=on	saw 1=on 0=off	pulse 1=on 0=off	range 100 : 4' 010 : 8' 001 : 16'		
17		x	noise 1=on 0=off	HP filter 1=off 0=on	x	VCA 1=gate 0=ENV	ENV 1= - 0= +	PWM 1=MAN 0=LFO

x : ignored

2.2 CHORD part

* When changing a tone.

Byte	Description
a 1111 0000	Exclusive status
b 0100 0001	Roland ID #
c 0011 0000	Operation code = tone change mode
d 0000 nnnn	Unit # = MIDI basic channel, nnnn = 0 - 15 where nnnn + 1 = channel #
e 0xxx xxxx	Tone number xxxxxxx = 0 - 127
f 0zzz zzzz	Value zzzzzzz = 0 - 127 (18 bytes total for values)
g 1111 0111	End of Exclusive

*** Example ***

a	b	c	d	e	f	f	. . .	g
F0	41	30	00	00	39	2D	00 37 00 55 00 00 00	
19	34	3B	20	56	28	00	1A 18	F7

* When changing a tone parameter.

Byte	Description
a 1111 0000	Exclusive status
b 0100 0001	Roland ID #
c 0011 0010	Operation code = Tone parameter change
d 0000 nnnn	Unit # = MIDI basic channel, nnnn = 0 - 15 where nnnn + 1 = channel #
e 000y yyyy	Parameter number yyyyy = 0 - 17
f 0zzz zzzz	Value zzzzzzz = 0 - 127
g 1111 0111	End of Exclusive

*** Example ***

a	b	c	d	e	f	g
F0	41	32	02	03	40	F7

* Parameter number table

P #	Function	P #	Function
0	x	8	x
1	x	9	VCF KYBD
2	x	10	VCA level
3	DCO PWM	11	ENV attack
4	x	12	ENV decay
5	VCF cutoff freq	13	ENV sustain
6	VCF resonance	14	ENV release
7	VCF ENV	15	x

For switches

Bit / P #	6	5	4	3	2	1	0
	Function						
16	wave select 1=saw 0=pulse	x	x	x	x	x	x	x
17	x	x	x	x	x	x	x	x

x : ignored

2.3 BASS part

* When changing a tone.

Byte	Description
a 1111 0000	Exclusive status
b 0100 0001	Roland ID #
c 0011 0000	Operation code = tone change mode
d 0000 nnnn	Unit # = MIDI basic channel, nnnn = 0 - 15 where nnnn + 1 = channel #
e 0xxx xxxx	Tone number xxxxxxx = 0 - 127
f 0zzz zzzz	Value zzzzzzz = 0 - 127 (18 bytes total for values)
g 1111 0111	End of Exclusive

*** Example ***

a	b	c	d	e	f	f	. . .	g
F0	41	30	01	00	39	2D	00 37 00 55 00 00 00	
19	34	3B	20	56	28	00	1A 18	F7

* When changing a tone parameter.

Byte	Description
a 1111 0000	Exclusive status
b 0100 0001	Roland ID #
c 0011 0010	Operation code = Tone parameter change
d 0000 nnnn	Unit # = MIDI basic channel, nnnn = 0 - 15 where nnnn + 1 = channel #
e 000y yyyy	Parameter number yyyyy = 0 - 17
f 0zzz zzzz	Value zzzzzzz = 0 - 127
g 1111 0111	End of Exclusive

*** Example ***

a	b	c	d	e	f	g
F0	41	32	01	03	40	F7

* Parameter number table

P #	Function	P #	Function
0	x	8	x
1	x	9	VCF KYBD
2	x	10	VCA level
3	DCO PWM	11	ENV attack
4	x	12	ENV decay
5	VCF cutoff freq	13	ENV sustain
6	VCF resonance	14	ENV release
7	VCF ENV	15	x

For switches

Bit / P #	6	5	4	3	2	1	0
	Function						
16	wave select 1=saw 0=pulse	x	x	x	x	x	x	x
17	x	x	x	x	x	x	x	x

x : ignored