COMPANY	SAMSON	APPLICANT	REVISED NUMBER AND DATE			SIGN	DRAWN	CHECKED	APPROVED	NOTE		SHEET NO.	SCHEMATIC DIAGRAM
TYPE CODE			1.	4.	7.		KU		JK		(2): 2012 TYPE (S): SMD TYPE		MODEL : SX-2400/2800
APPROVED DATE	2004.12.28		2.	5.	8.						(3): 3216 TYPE N/A: NOT USED		
			3.	6.	9.								

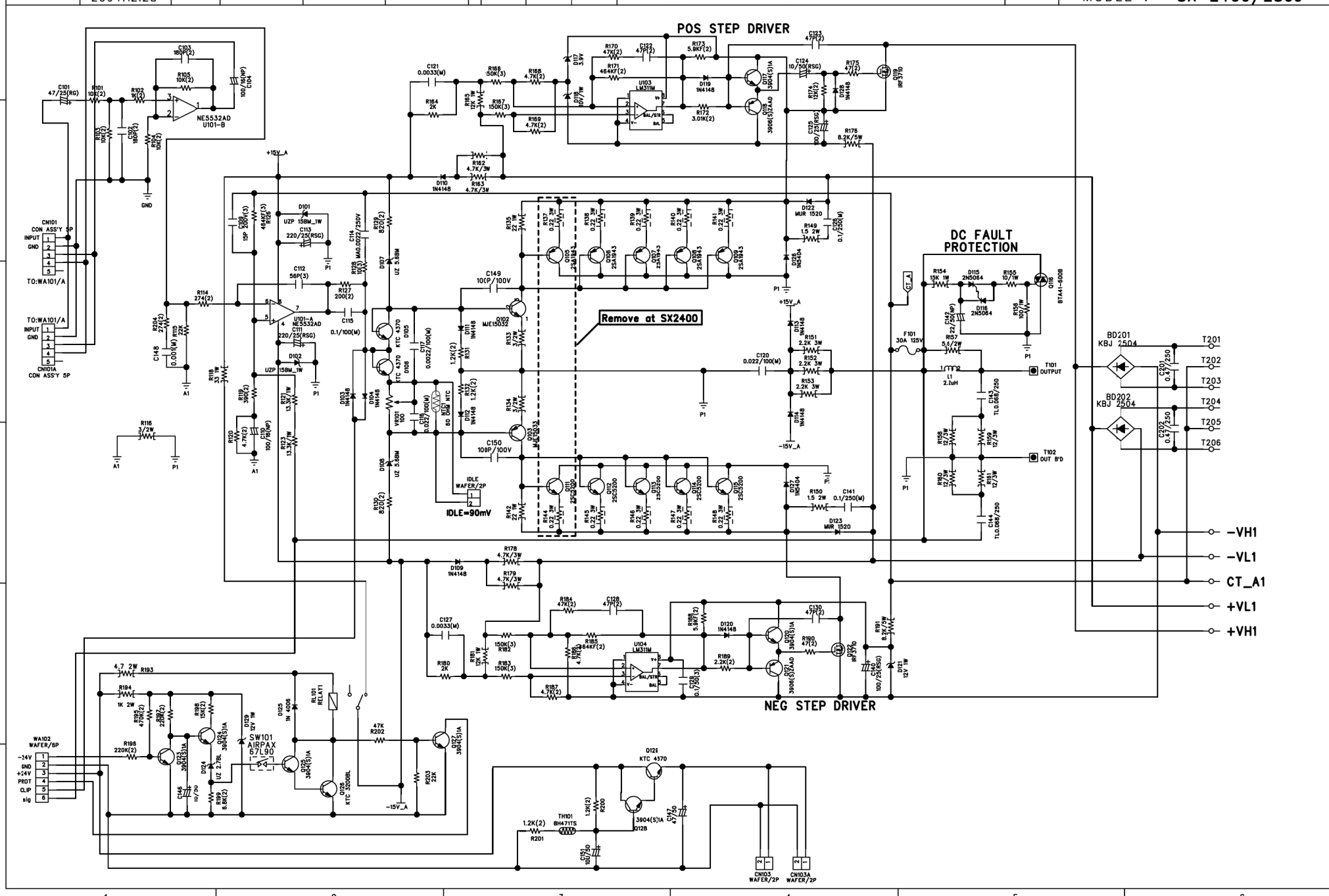

SX2400_2800AMP_MP(041228).sch-1 - Tue Aug 02 16:59:42 2005