ANALOG OUTPUT BOX

AO8

SERVICE MANUAL

• AO8-DA8

■ **CONTENTS**

PA 011506
200004**-250000

YAMAHA
HAMAMATSU, JAPAN
0.27K-✱✱✱✱ K Printed in Japan '00.09

REVISED PAGE LIST

<PARTS LIST>

<CIRCUIT DIAGRAM>

IMPORTANT NOTICE

This manual has been provided for the use of authorized Yamaha Retailers and their service personnel. It has been assumed that basic service procedures inherent to the industry, and more specifically Yamaha Products, are already known and understood by the users, and have therefore not been restated.

WARNING: Failure to follow appropriate service and safety procedures when servicing this product may result in personal injury, destruction of expensive components and failure of the product to perform as specified. For these reasons, we advise all Yamaha product owners that all service required should be performed by an authorized Yamaha Retailer or the appointed service representative.

IMPORTANT: This presentation or sale of this manual to any individual or firm does not constitute authorization, certification, recognition of any applicable technical capabilities, or establish a principal-agent relationship of any form.

The data provided is belived to be accurate and applicable to the unit(s) indicated on the cover. The research engineering, and service departments of Yamaha are continually striving to improve Yamaha products. Modifications are, therefore, inevitable and changes in specification are subject to change without notice or obligation to retrofit. Should any discrepancy appear to exist, please contact the distributor's Service Division.

WARNING: Static discharges can destroy expensive components. Discharge any static electricity your body may have accumulated by grounding yourself to the ground bus in the unit (heavy gauge black wires connect to this bus).

IMPORTANT: Turn the unit OFF during disassembly and parts replacement. Recheck all work before you apply power to the unit.

WARNING: CHEMICAL CONTENT NOTICE!

The solder used in the production of this product contains LEAD. In addition, other electrical/electronic and/or plastic (where applicable) components may also contain traces of chemicals found by the California Health and Welfare Agency (and possibly other entities) to cause cancer and/or birth defects or other reproductive harm.

DO NOT PLACE SOLDER, ELECTRICAL/ELECTRONIC OR PLASTIC COMPONENTS IN YOUR MOUTH FOR ANY REASON WHAT SO EVER!

Avoid prolonged, unprotected contact between solder and your skin! When soldering, do not inhale solder fumes or expose eyes to solder/flux vapor!

If you come in contact with solder or components located inside the enclosure of this product, wash your hands before handling food.

IMPORTANT NOTICE FOR THE UNITED KINGDOM

Connecting the Plug and Cord

IMPORTANT. The wires in this main lead are coloured in accordance with the following code:

BLUE: NEUTRAL
BROWN: LIVE

As the colours of the wires in the main lead of this apparatus may not correspond with the coloured markings identifying the terminals in your plug, proceed as follows:

The BLUE wire must be connected to the terminal that is marked with the letter N (or coloured BLACK).

The BROWN wire must be connected to the terminal that is marked with the letter L (or coloured RED).

Be certain that neither core is connected to the earth terminal of the three pin plug.

■ WARNING

Components having special characteristics are marked ⚠ and must be replaced with parts having specification equal to those originally installed.

SPECIFICATIONS

Sampling frequency (external sync)	39.69 kHz – 50.88 kHz
Power supply	USA and Canada: 120 V, 60 Hz
	Others: 230 V, 50 Hz
Power consumption	120 W
Dimensions (W x H x D)	480 mm x 141.5 mm x 466.8 mm
Weight	15.4 kg
Operating temperature	10 – 35 ˚C
Power cable length	2.1 m
Cooling fan speed	always fixed
Accessories	Connection cable (68-pin, D-sub, half-pitch) x 1, Length: 3 m

Digital I/Os

I/O connectors	Level	Type
INPUT A, B, C	RS-422	D-sub, half-pitch, 68-pin connector (female)
WORD CLOCK IN	TTL/75 Ω (ON/OFF)	BNC Connector
WORD CLOCK OUT	TTL/75 Ω	BNC Connector

Slots

Card	Input
LMY4-AD	Channel 1 – 4

■ PANEL LAYOUT

● Front Panel

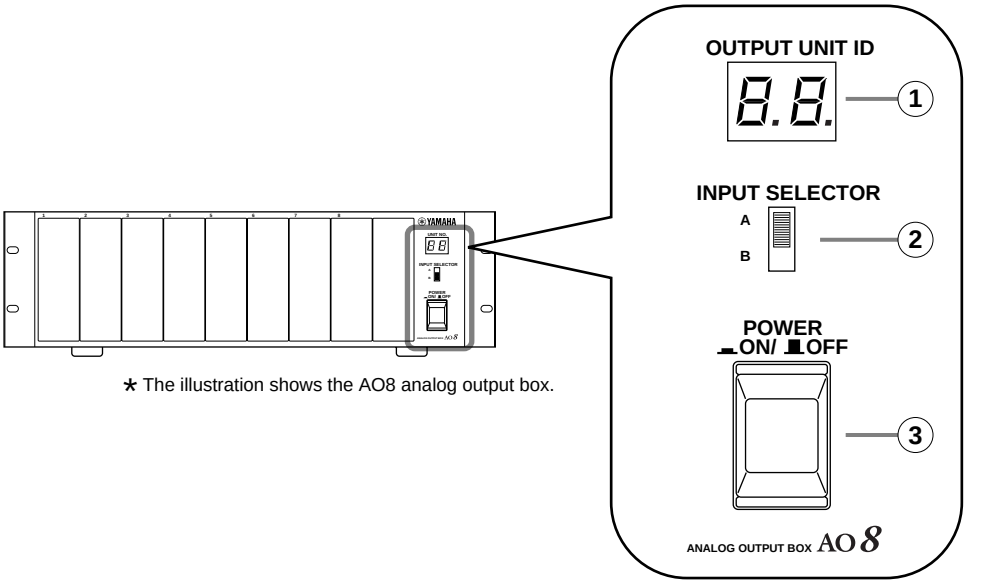

* The illustration shows the AO8 analog output box.

① OUTPUT UNIT ID indicator
② INPUT SELECTOR switch
③ POWER ON/OFF

● Rear Panel

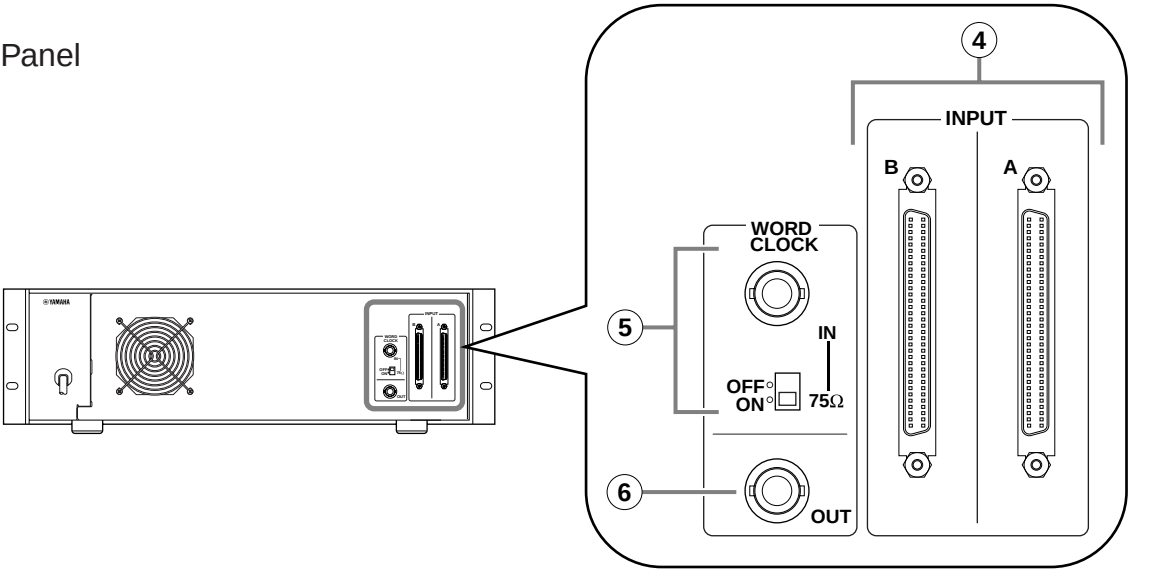

④ INPUT connectors A and B
⑤ WORD CLOCK IN jack, ON/OFF switch
⑥ WORD CLOCK OUT jack

DIMENSIONS

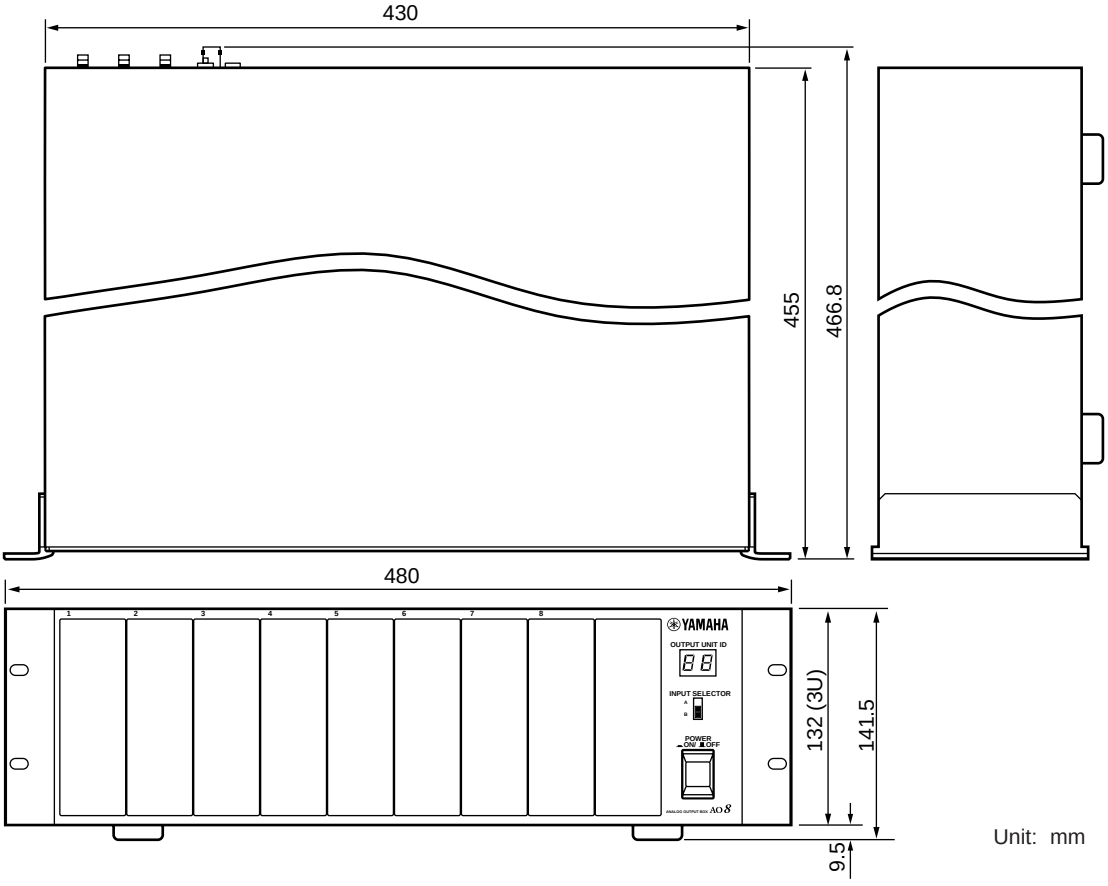
430
455
466.8
480
1
2
3
4
5
6
7
8
YAMAHA
OUTPUT UNIT ID
INPUT SELECTOR
POWER
ON OFF
ANALOG OUTPUT BOX AO8
132 (3U)
141.5
9.5
Unit: mm

■ CONNECTOR CIRCUIT DIAGRAM

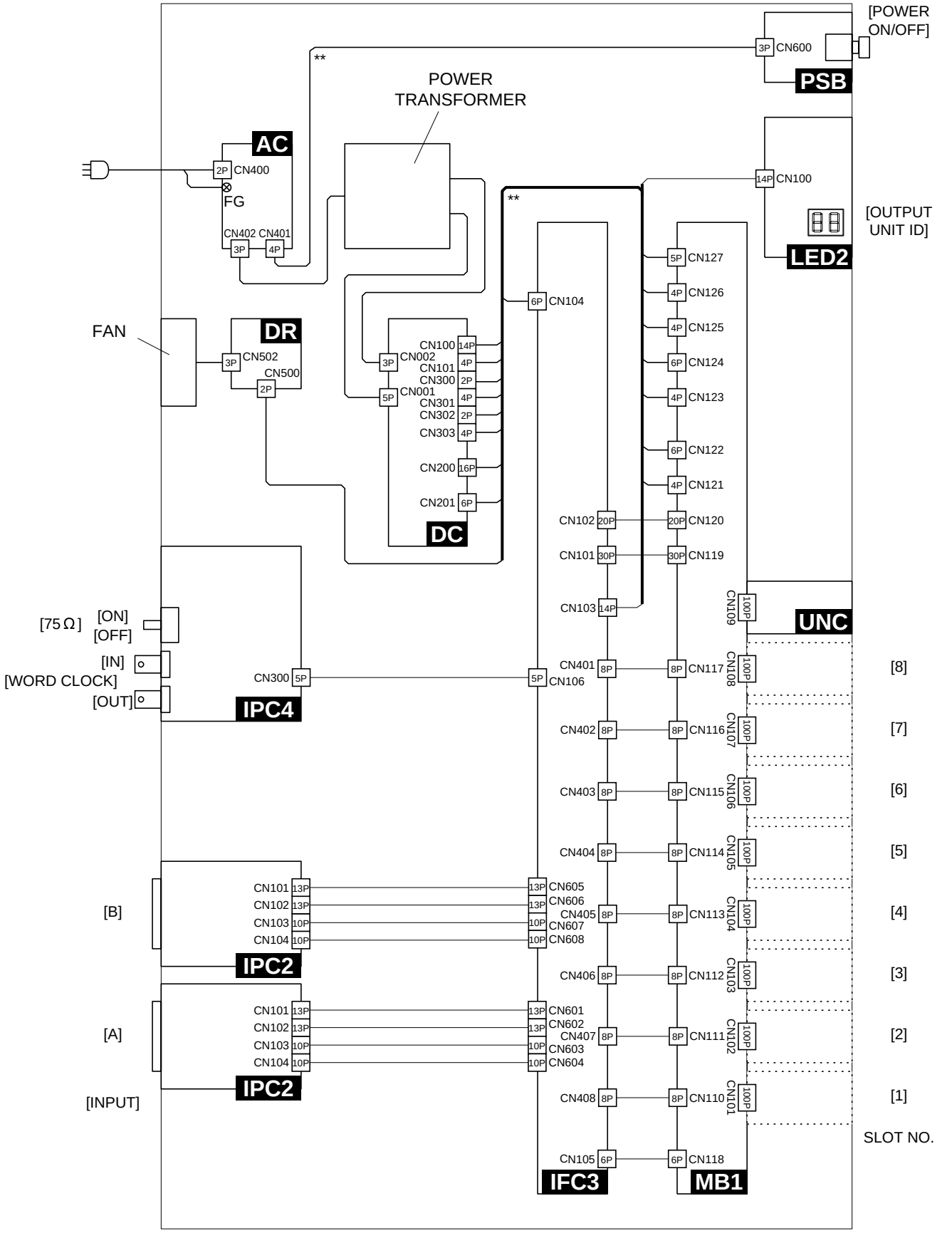

KEC-92523-2

Circuit Board	CN No.	Pin No.	Circuit Board	CN No.	Pin No.
DC	CN100	1	MB1	CN122	4
		2			3
		3	MB1	CN124	4
		4			3
		5	MB1	CN127	5
		6	IFC3	CN104	1
		7			2
		8	MB1	CN122	2
		9			1
		10	MB1	CN124	2
		11			1
		12	MB1	CN127	3
		13	IFC3	CN104	3
		14			4
DC	CN101	1	MB1	CN127	4
		2	IFC3	CN104	5
		3			6
DC	CN200	1	MB1	CN121	4
		2	MB1	CN123	4
		3	MB1	CN125	4
		4	MB1	CN121	1
		5	MB1	CN123	1
		6	MB1	CN125	1
DC	CN201	1	MB1	CN121	2
		2	MB1	CN123	2
		3	MB1	CN125	2
DC	CN300	1	DR	CN500	1
		2			2
DC	CN301	1	MB1	CN122	6
		2	MB1	CN124	6
		3	MB1	CN126	2
		4			1
DC	CN302	2	MB1	CN127	1
DC	CN303	1	MB1	CN122	5
		2	MB1	CN124	5
IFC3	CN103	1	LED1	CN100	1
		2			2
		3			3
		4			4
		5			5
		6			6
		7			7
		8			8
		9			9
		10			10
		11			11
		12			12
		13			13
		14			14

AC	CN701	1	PSB	CN600	1
		4			3

KEC-92523-3⚠

■ BLOCK DIAGRAM

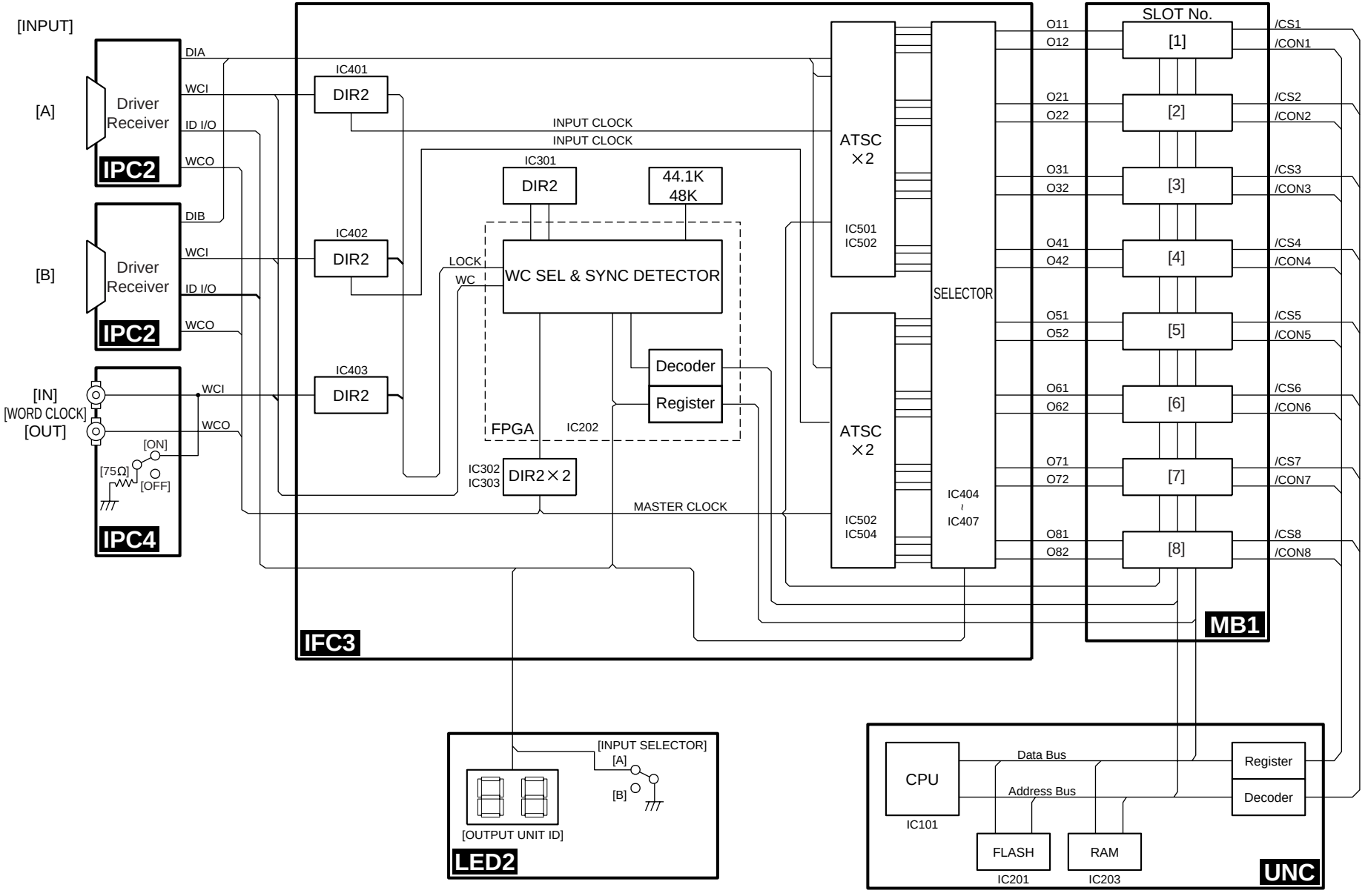

KEC-92521

■ DISASSEMBLY PROCEDURE

1. UNC Card Assembly

1-1 Remove the four (4) screws marked [470]. The UNC card assembly can them be removed. (Fig. 1)

2. Front Panel Assembly

2-1 Remove the UNC card assembly. (See Procedure 1.)

2-2 Remove the thirty-two (32) screws marked [500]. The blank panel can then be removed. (Fig. 1)

2-3 Remove the six (6) screws marked [450]. Each mount bracket can then be removed. (Fig. 1)

2-4 Remove the six (6) screws marked [400]. The front panel assembly can then be removed. (Fig. 1)

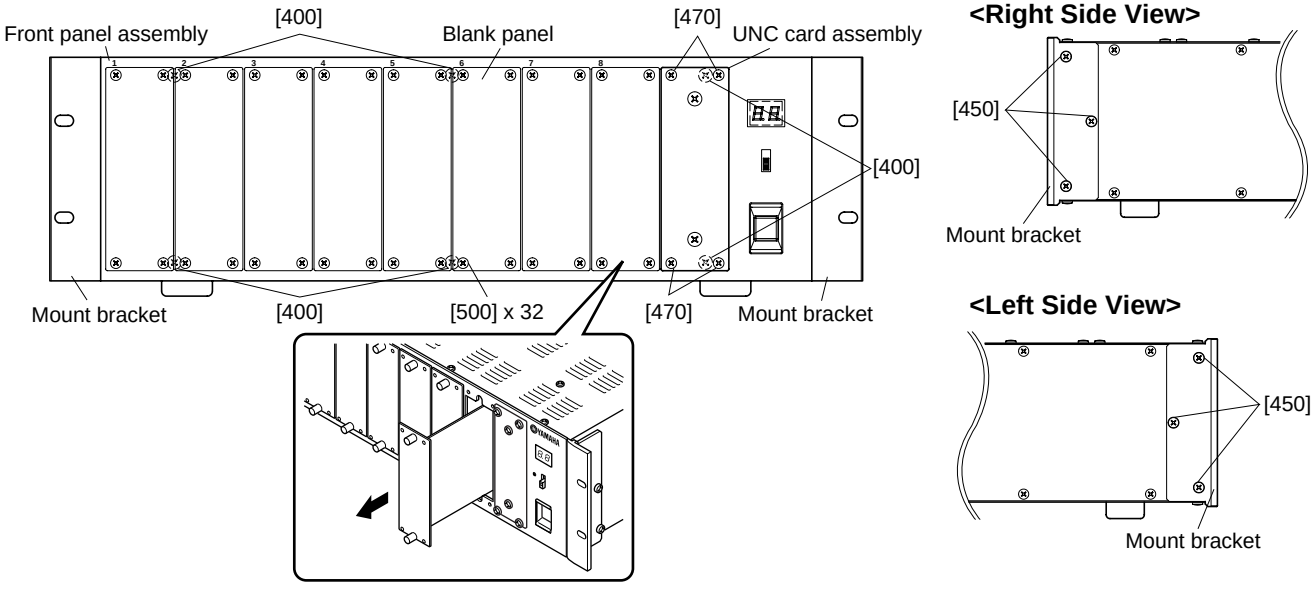

[400]: Flat Head Screw 4.0x8 MFZN2BL (VA221200)
[450]: Oval Head Screw 4.0x8 MFZN2BL (VS153600)
[470]: Bonding Screw 3.0x6 MFZN2BL (VS863000)
[500]: Bonding Screw 3.0x6 MFZN2BL (VS863000)

Fig. 1

3. LED2 Circuit Board

3-1 Remove the front panel assembly. (See Procedure 2.)

3-2 Remove the two (2) screws marked [80]. The LED2 circuit board can then be removed. (Fig. 2)

4. PSB Circuit Board

4-1 Remove the UNC card assembly. (See Procedure 1.)

4-2 Remove the front panel assembly. (See Procedure 2.)

4-3 Remove the seventeen (17) screws marked [430]. The top panel can then be removed. (Fig. 2)

4-4 Remove the two (2) screws marked [100]. The PSB circuit board can then be removed. (Fig. 2)

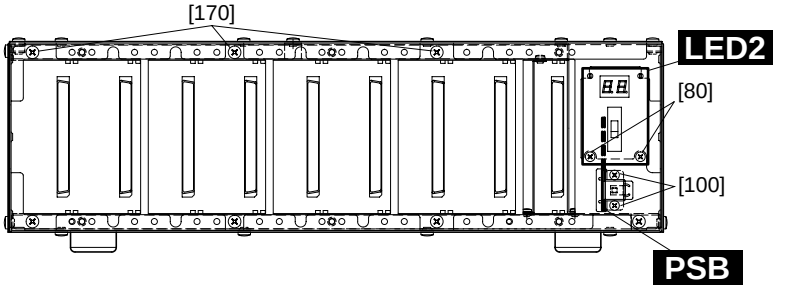

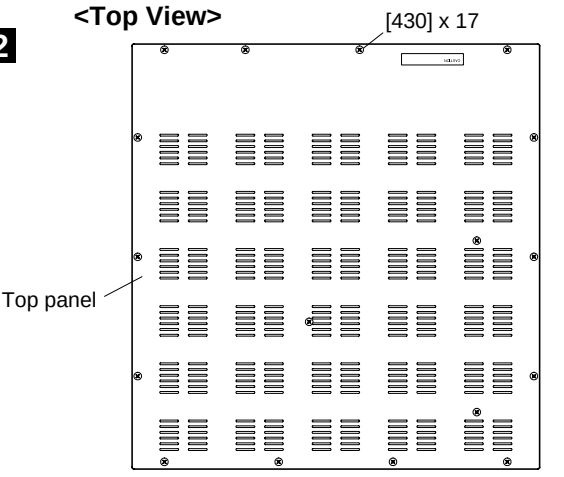

[80]: Bind Head Tapping Screw-B 3.0x6 MFZN2BL (EP600230)
[100]: Bind Head Screw 3.0x8 MFZN2BL (VB659000)
[170]: Bind Head Tapping Screw-B A4.0x8 MFZN2BL (VC688800)
[430]: Bind Head Tapping Screw-B A4.0x8 MFZN2BL (VC688800)

Fig. 2

5. Circuit Boards and Units

Remove the top panel, each circuit board and unit can then be removed. (Fig. 3)

Circuit Board and Unit	Ref. No.	Screw	QTY
IPC2	A	Screw	2
IPC4	310	Bonding Screw 3.0x6 MFZN2BL (VS863000)	2
	320	Bind Head Screw A4.0x6 MFZN2BL (EG340290)	2
DR	380	Bonding Tapping Screw-B (VN413300)	2
Power Transformer	240	Bonding Tapping Screw-B (VC688800)	4

6. Mother Assembly

6-1 Remove the UNC card assembly. (See Procedure 1.)

6-2 Remove the front panel assembly. (See Procedure 2.)

6-3 Remove the top panel. (See Procedure 4-3.)

6-4 Remove the seven (7) screws marked [280]. The mother assembly can then be removed. (Fig. 3)

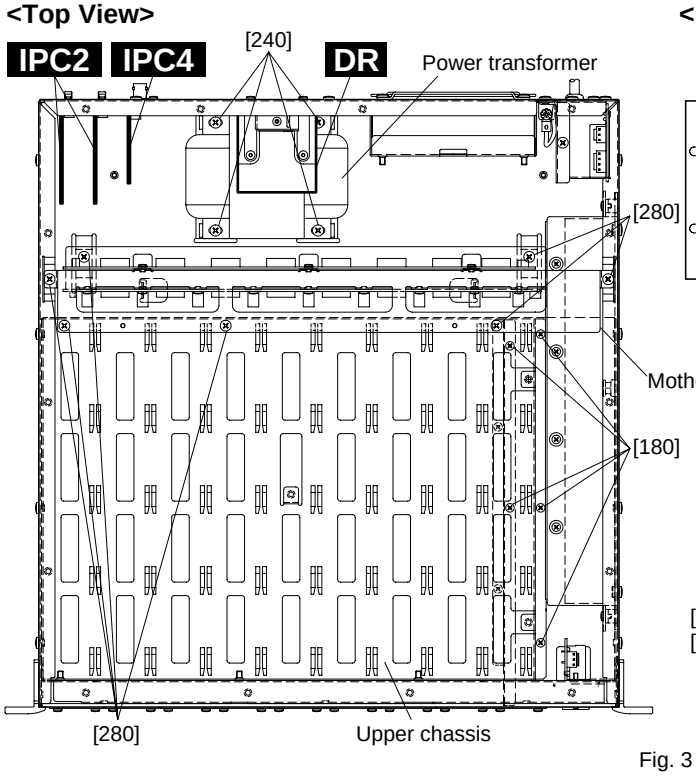

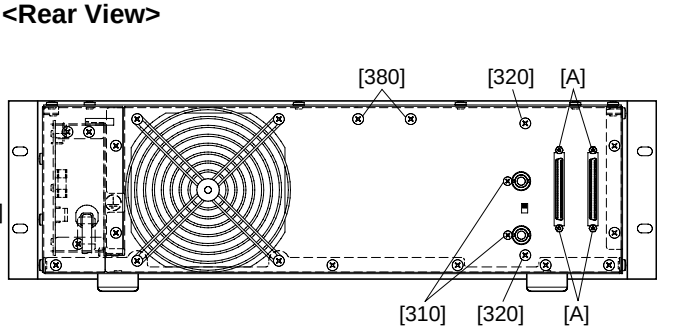

[180]: Bind Head Tapping Screw-B A3.0x6 MFZN2BL (VP157900)
[280]: Bind Head Tapping Screw-B A4.0x8 MFZN2BL (VC688800)

Fig. 3

7. MB1 Circuit Board

7-1 Remove the mother assembly. (See Procedure 6.)

7-2 Remove the nine (9) screws marked [30] and the five (5) screws marked [50]. The MB1 circuit board can then be removed. (Fig. 4)

8. IFC3 Circuit Board

8-1 Remove the mother assembly. (See Procedure 6.)

8-2 Remove the six (6) screws marked [70]. The IFC3 circuit board can then be removed. (Fig. 4)

9. Side Panel Assembly

9-1 Remove the UNC card assembly. (See Procedure 1.)

9-2 Remove the front panel assembly. (See Procedure 2.)

9-3 Remove the top panel. (See Procedure 4-3.)

9-4 Remove the mother assembly. (See Procedure 6.)

9-5 Remove the six (6) screws marked [450]. Each mount bracket can then be removed. (Fig. 5)

9-6 Remove the seven (7) screws marked [200]. The side panel (L) can then be removed.

9-7 Remove the three (3) screws marked [170] and the five (5) screws marked [180]. The upper chassis can then be removed. (Fig. 2, Fig. 3)

9-8 Remove the seven (7) screws marked [260]. The side panel assembly can then be removed. (Fig. 5)

• Mother Assembly

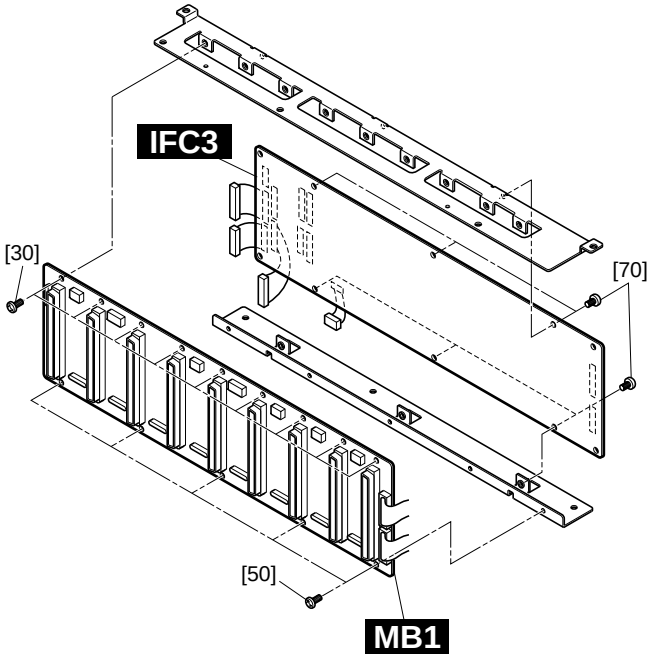

[30]: Bind Head Tapping Screw-B 3.0x6 MFZN2BL (EP600230)
[50]: Bind Head Tapping Screw-B 3.0x6 MFZN2BL (EP600230)
[70]: Bind Head Tapping Screw-B 3.0x6 MFZN2BL (EP600230)

Fig. 4

<Left Side View>

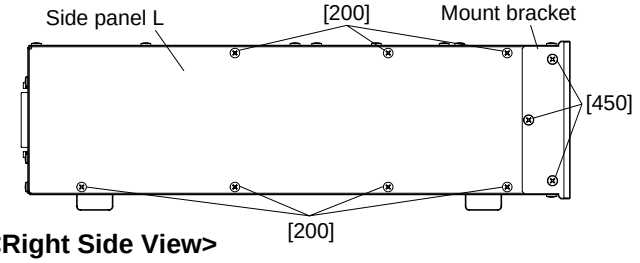

<Right Side View>

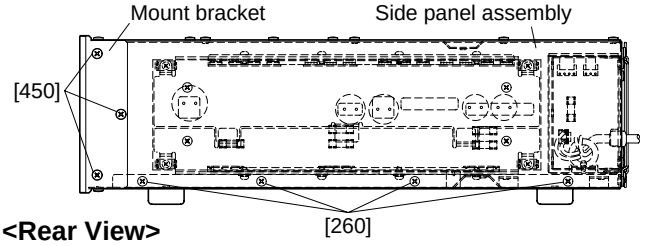

<Rear View>

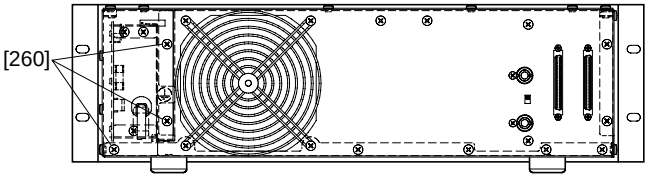

[200]: Bind Head Tapping Screw-B A4.0x8 MFZN2BL (VC688800)
[260]: Bind Head Tapping Screw-B A4.0x8 MFZN2BL (VC688800)
[450]: Oval Head Screw 4.0x8 MFZN2BL (VS153600)

Fig. 5

10. AC Assembly

10-1 Remove the side panel assembly. (See Procedure 9.)

10-2 Remove the three (3) screws marked [90]. The AC assembly can then be removed. (Fig. 6)

11. DC Assembly

11-1 Remove the side panel assembly. (See Procedure 9.)

11-2 Remove the four (4) screws marked [60]. The DC assembly can then be removed. (Fig. 6)

12. DC Circuit Board

12-1 Remove the side panel assembly. (See Procedure 9.)

12-2 Remove the DC assembly. (See Procedure 11.)

12-3 Remove the four (4) screws marked [D60]. The TR holder can then be removed. (Fig. 7)

12-4 Remove the three (3) screws marked [D80]. The BR holder can then be removed. (Fig. 7)

12-5 Remove the five (5) screws marked [D90]. The DC cricuit board can then be removed. (Fig. 7)

• Side Panel Assembly

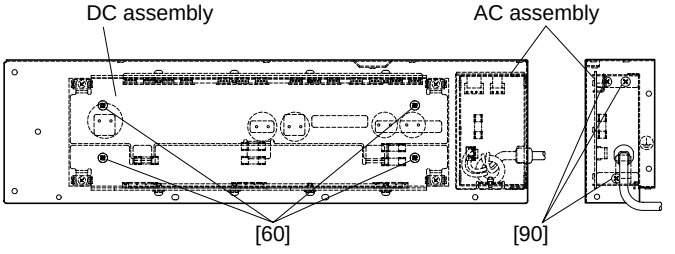

[60]: Bind Head Screw A4.0x6 MFZN2BL (EG340290)
[90]: Bind Head Tapping Screw-B A4.0x8 MFZN2BL (VC688800)

Fig. 6

• DC Assembly

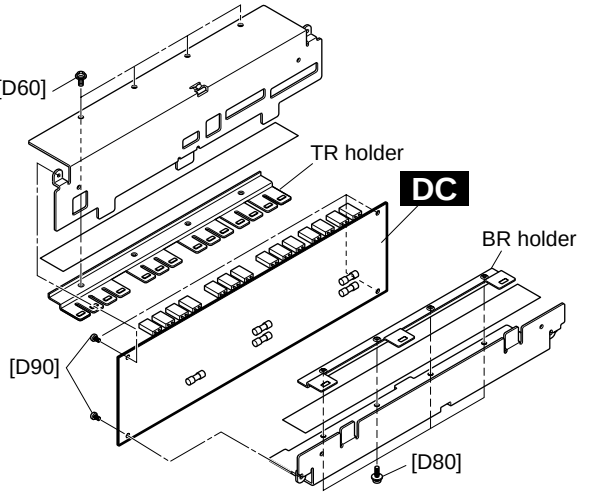

[D60]: Pan Head Screw SP4.0x8 MFZN2Y (EL200020)
[D80]: Pan Head Screw SP4.0x8 MFZN2Y (EL200020)
[D90]: Bind Head Tapping Screw-B 3.0x6 MFZN2BL (EP600230)

Fig. 7

■ LSI PIN DESCRIPTION

● SGH609080F-47F (XU235A00) ATSC

IFC3: IC501–504

PIN NO.	NAME	I/O	FUNCTION
1	syncati	I	Synch. word input terminal for ati, siat3-0 input
2	mccti	I	64 fs clock input terminal for ati, siat3-0 input
3	mcbti	I	128 fs clock input terminal for ati, siat3-0 input
4	VCC		Power supply (+5 V)
5	GND		Ground
6	mcati	I	256 fs clock input terminal for ati, siat3-0 input
7	GND		Ground
8	siat0	I	Serial data input terminal
9	siat1	I	
10	siat2	I	
11	siat3	I	
12	ati	I	Optical input terminal
13	GND		Ground
14	ato	O	Optical output terminal
15	soat3	O	Serial data output terminal
16	soat2	O	
17	soat1	O	
18	soat0	O	
19	VCC		Power supply (+5 V)
20	GND		Ground
21	mcato	I	256 fs clock input terminal for ato, soat3-0 output
22	GND		Ground
23	mcbto	I	128 fs clock input terminal for ato, soat3-0 output
24	mccto	I	64 fs clock input terminal for ato, soat3-0 output
25	syncato	I	Synch. word input terminal for ato, soat3-0 output
26	clksel	I	Clock select terminal for ato, soat 3-0 output 0: mcato,mcbto,mccto,syncato 1: mcai,mcbi,mcci,synci
27	ato-sel0	I	Format select terminal for ato, soat3-0 output
28	ato-sel1	I	Format select terminal for ato, soat3-0 output
29	bitsel2		Bit shift select terminal for the ato output
30	bitsel1		
31	bitsel0		
32	VCC		Power supply (+5 V)
33	GND		Ground
34	ext-sync2		Synch. detect output terminal 2
35	ui0		U-bit input terminal for optical output
36	ui1		
37	ui2		
38	ui3		
39	si-sel0		input format select terminal for si3-0
40	si-sel1		input format select terminal for si3-0i

0: mcato,mcbto,mccto,syncato
1: mcai,mcbi,mcci,synci

ato sel1	ato sel0	output format	
1	1	ato	
1	0	soat0	(8ch/line)
0	1	soat2, 0	(4ch/line)
0	0	soat3-0	(2ch/line)

si sel1	si sel0	input format	
1	1	not enable to set	
1	0	si0	(8ch/line)
0	1	si2, 0	(4ch/line)
0	0	si3-0	(2ch/line)

PIN NO.	NAME	I/O	FUNCTION
41	synci	I	Synch. word input terminal for si3-0 input
42	mcci	I	64 fs clock input terminal for si3-0 input
43	mcbi	I	128 fs clock input terminal for si3-0 input
44	VCC		Power supply (+5 V)
45	GND		Ground
46	mcai	I	256 fs clock input terminal for si3-0 input
47	GND		Ground
48	si0	I	Serial data input terminal
49	si1	I	
50	si2	I	
51	si3	I	
52	GND		Ground
53	so3	O	Serial data output terminal
54	so2	O	
55	so1	O	
56	so0	O	
57	VCC		Power supply (+5 V)
58	GND		Ground
59	mcao	I	256 fs clock input terminal for so3-0 output
60	GND		Ground
61	mcbo	I	128 fs clock input terminal for so3-0 output
62	mcco	I	64 fs clock input terminal for so3-0 output
63	synco	I	Synch. word input terminal for so3-0 output
64	so-sel1	I	Format select terminal for soat3-0 output
65	so-sel0	I	Format select terminal for soat3-0 output
66	uo3	O	U-bit output terminal for optical output
67	uo2	O	
68	uo1	O	
69	uo0	O	
70	ext-sync1	O	Synch. detect output terminal 1
71	VCC		Power supply (+5 V)
72	GND		Ground
73	clk	I	Clock input terminal for word clock extract
74	GND		Ground
75	/res	I	System reset input terminal
76	GND		Ground
77	wc-at	O	Word clock output terminal
78	mute	I	Data mute input terminal
79	ati-sel1	I	Input format select terminal for ati, siat3-0.
80	ati-sel0	I	input format select terminal for ati, siat3-0.

so sel1	so sel0	input format	
1	1	not enable to set	
1	0	so0	(8ch/line)
0	1	so2, 0	(4ch/line)
0	0	so3-0	(2ch/line)

ati sel1	ati sel0	input format	
1	1	ati	
1	0	ati0	(8ch/line)
0	1	ati2, 0	(4ch/line)
0	0	ati3-0	(2ch/line)

● **YM3436DK** (XG948E0) **DIR2** (Digital Format Interface Receiver)

IFC3: IC301 to 303, 401 to 403

PIN NO.	NAME	I/O	FUNCTION	PIN NO.	NAME	I/O	FUNCTION
1	DAUX	I	Auxiliary input for audio data	23	RSTN	I	System reset input
2	HDLT	O	Asynchronous buffer operation flag	24	Vdda		VCO section power (+5V)
3	DOUT	O	Audio data output	25	CTLN	I	VCO control input N
4	VFL	O	Parity flag output	26	PCO	O	PLL phase comparison output
5	OPT	O	Fs x 1 Synchronous output signal for DAC	27	(NC)		
6	SYNC	O	Fs x 1 Synchronous output signal for DSP	28	CTLP	I	VCO control input P
7	MCC	O	Fs x 64 Bit clock output	29	Vssa		VCO section power (GND)
8	WC	O	FS x 1 Word clock output	30	TSTN	I	Test terminal. Open for normal use
9	MCB	O	Fs x 128 Bit clock output	31	KM2	I	Clock mode switching input 2
10	MCA	O	Fs x 256 Bit clock output	32	KM0	I	Clock mode switching input 0
11	SKSY	I	Clock synchronization control input	33	FS1	O	Channel status sampling frequency display output 1
12	XI	I	Crystal oscillator connection or external clock input	34	FS0	O	Channel status sampling frequency display output 0
13	XO	O	Crystal oscillator connection	35	CSM	I	Channel status output method selection
14	P256	O	VCO oscillating clock connection	36	EXTW	I	External synchronous auxiliary input word clock
15	LOCK	O	PLL lock flag	37	DDIN	I	EIAJ (AES/EBU) data input
16	Vss		Logic section power (GND)	38	LR	O	PLL word clock output
17	TC	O	PLL time constant switching output	39	Vdd		Logic section power (+5 V)
18	DIM1	I	Data input mode selection	40	ERR	O	Data error flag output
19	DIM0	I	Data input mode selection	41	EMP	O	Channel status emphasis control code output
20	DOM1	I	Data output mode selection	42	CD0	O	3-wire type microcomputer interface data output
21	DOM0	I	Data output mode selection	43	CCK	I	3-wire type microcomputer interface clock input
22	KM1	I	Clock mode switching input 1	44	CLD	I	3-wire type microcomputer interface load input

● HD6477042AF28 (XY715A00) CPU

UNC: IC101

PIN NO.	NAME	I/O	FUNCTION	PIN NO.	NAME	I/O	FUNCTION
1	PE14	O	Port E	57	D11	I/O	Data bus
2	PE15	O	Port E	58	D10	I/O	
3	VSS	I	Ground	59	D9	I/O	
4	A0	O	Address bus	60	D8	I/O	
5	A1	O		61	VSS	I	Ground
6	A2	O		62	D7	I/O	Data bus
7	A3	O		63	D6	I/O	
8	A4	O		64	D5	I/O	
9	A5	O		65	VCC	I	Power supply
10	A6	O		66	D4	I/O	Data bus
11	A7	O		67	D3	I/O	
12	A8	O		68	D2	I/O	
13	A9	O		69	D1	I/O	
14	A10	O		70	D0	I/O	
15	A11	O		71	VSS	I	Ground
16	A12	O		72	XTAL	I	Crystal oscillator
17	A13	O		73	MD3	I	Mode control
18	A14	O		74	EXTAL	I	Crystal oscillator
19	A15	O		75	MD2	I	Mode control
20	A16	O		76	NMI	I	Non-maskable interrupt request
21	VCC	I	Power supply	77	VCC	I	Power supply
22	A17	O	Address bus	78	MD1	I	Mode control
23	VSS	I	Ground	79	MD0	I	Mode control
24	/RAS	O	Row address strobe	80	PLLVCC	I	PLL Power supply
25	/CASL	O	Column address strobe (low)	81	PLLCAP	I	PLL capacitor
26	/CASH	O	Column address strobe (high)	82	PLLVSS	I	PLL Ground
27	VSS	O	Ground	83	PA15 / CK	O	Port A / Clock
28	RDWR / PB5	O	DRAM read/write / Port B	84	/RES	I	Reset
29	A18	O	Address bus	85	PE0	I	Port E
30	A19	O		86	PE1	I	
31	A20	O		87	PE2	I	
32	PB9 /A21	O	Port B / Address bus	88	PE3	I	
33	VSS	I	Ground	89	PE4	I	
34	/RD	O	Read	90	VSS	I	Ground
35	/WDTOVF	O	Watch dog timer overflow	91	AN0 / PF0	I	Analog input / Port F
36	/WRH	O	High write	92	AN1 / PF1	I	
37	VCC	I	Power supply	93	AN2 / PF2	I	
38	/WRL	O	Low write	94	AN3 / PF3	I	
39	VSS	I	Ground	95	AN4 / PF4	I	
40	/CS1	O	Chip select	96	AN5 / PF5	I	
41	/CS0	O	Chip select	97	AVSS	I	Analog ground
42	PA9 / TCLKD	O	Port A / Timer clock	98	AN6 / PF6	I	Analog input / Port F
43	/IRQ2 / TCLKC	I	Interrupt request / Timer clock	99	AN7 / PF7	I	Analog input / Port F
44	/CS3	O	Chip select	100	AVCC	I	Power supply
45	/CS2	O	Chip select	101	VSS	I	Ground
46	/IRQ1	I	Interrupt request	102	PE5	O	Port E
47	TXD	O	Data transmission	103	VCC	I	Power supply
48	RXD	I	Data reception	104	PE6	O	Port E
49	/IRQ0	I	Interrupt request	105	PE7	O	
50	PA1 / TXD0	O	Port A / Data transmission	106	PE8	O	
51	PA0 / RXD0	I	Port A / Data reception	107	PE9	O	
52	D15	I/O	Data bus	108	PE10	O	
53	D14	I/O		109	VSS	I	Ground
54	D13	I/O		110	PE11	O	Port E
55	VSS	I	Ground	111	PE12	O	
56	D12	I/O	Data bus	112	PE13	O	

■ IC BLOCK DIAGRAM

- **HD74LVU04AFPEL** (XY102A00)
  Hex Inverter
  IFC3: IC105

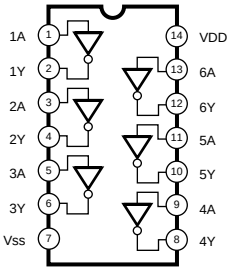

- **HD74LV04AFPEL** (IS000400)
  Hex Inverter
  IFC3: IC311, 408
  UNC: IC105

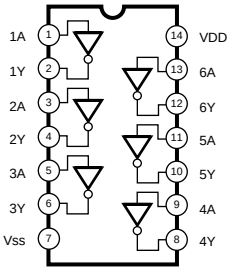

- **HD74LV08AFPEL** (IS000800)
  Quad 2 Input AND
  IFC3: IC104, 310, 409
  UNC: IC104, 213

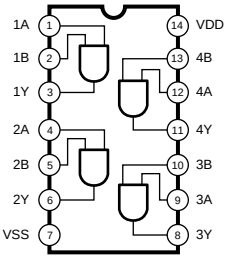

- **SN74LV138ANSR** (IS013810)
  3 to 8 Demultiplexer
  UNC: IC211, 212

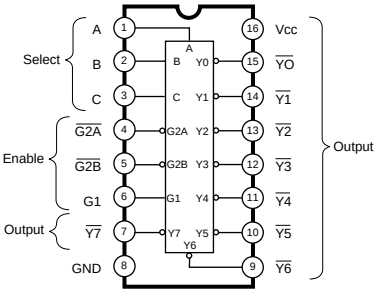

- **HD74LV245AFPEL** (IS024500)
  Octal 3-State Bus Transceiver
  IPC2: IC104, 105
  IFC3: IC101-103, 106, 107, 404-407, 601-608
  UNC: IC102, 204, 210

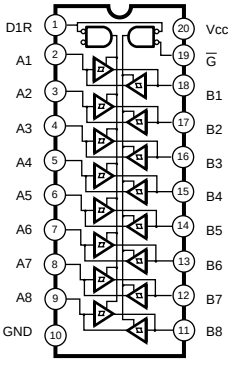

- **DS26C32ATMX** (XU815A00)
  Quad Differential Line Receiver
  IPC2: IC100-103, 106

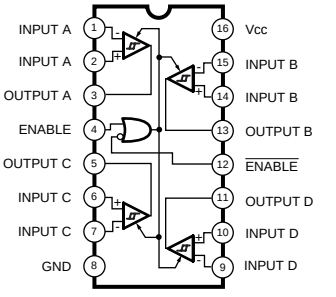

- **AM26LS31CNSR** (XU996A00)
  Quad Line Driver
  IPC2: IC107

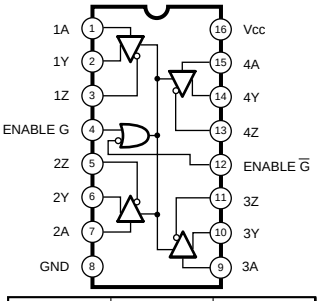

INPUT	ENABLES		OUTPUTS	
A	G	$\overline{G}$	Y	Z
H	H	X	H	L
L	H	X	L	H
H	X	L	H	L
L	X	L	L	H
X	L	H	Z	Z

H= high level X= irrelevant
L= low level Z= high impedance (off)

- **SN75124N** (XE737A00)
  Triple Line Receiver
  IPC4: IC300

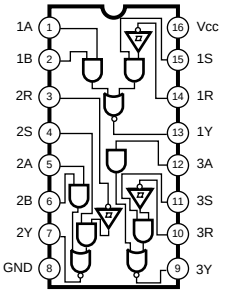

- **SN75121** (XE638A00)
  Dual Line Driver
  IPC4: IC301

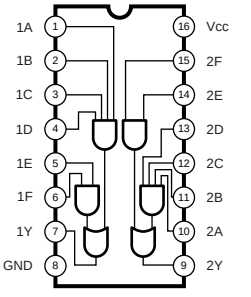

■ CIRCUIT BOARDS

Note: See parts list for details of circuit board component parts.

● IPC2 1/2 Circuit Board

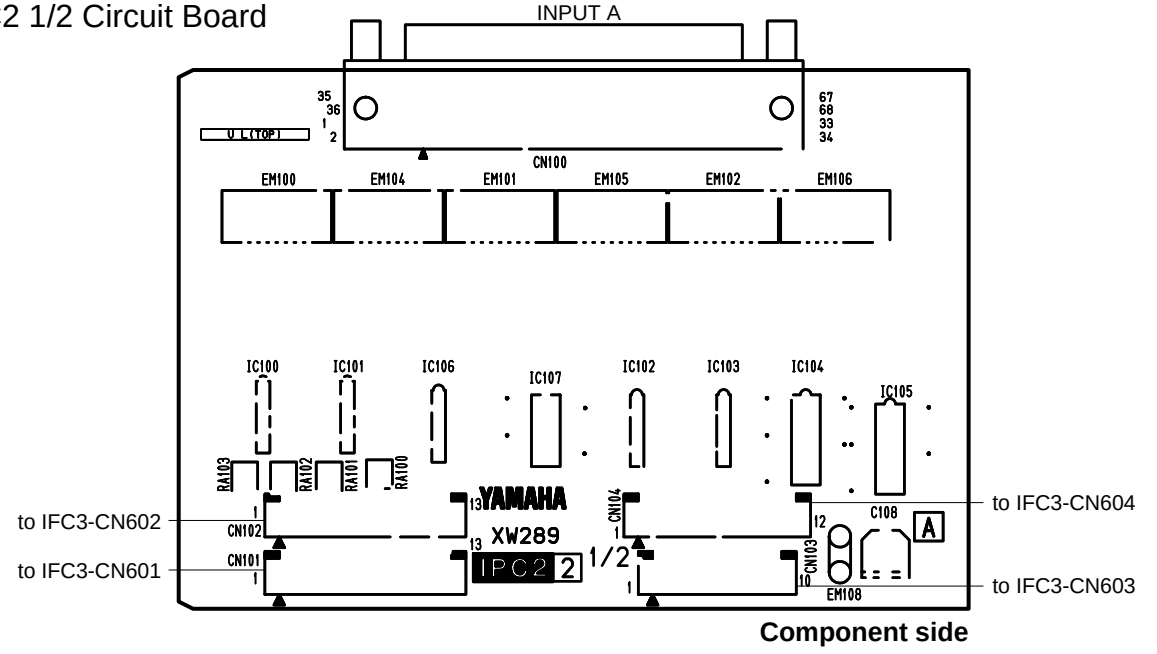

Component side

● IPC2 2/2 Circuit Board

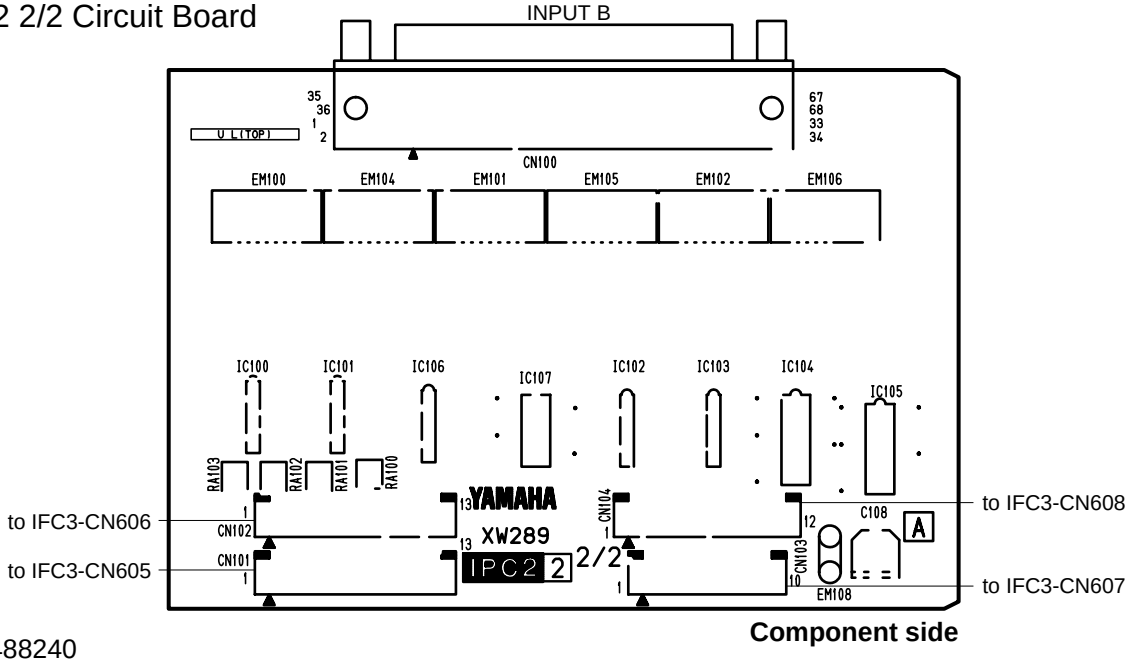

Component side

3NA-V488240

● AC Circuit Board

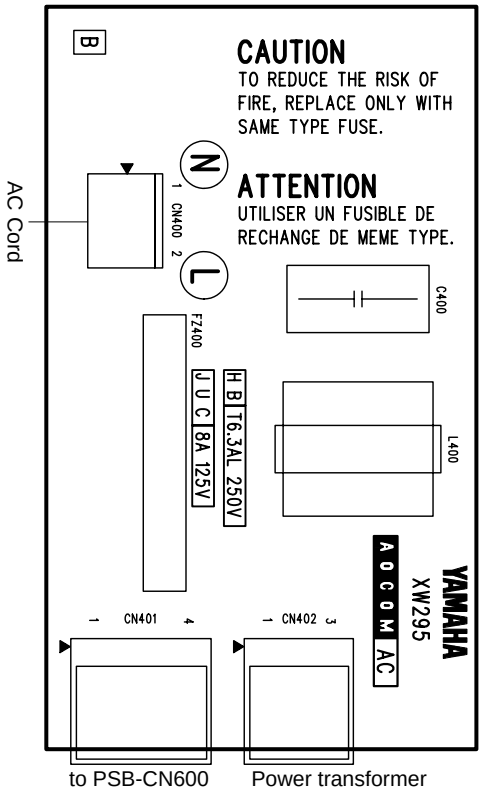

Component side

● DR Circuit Board

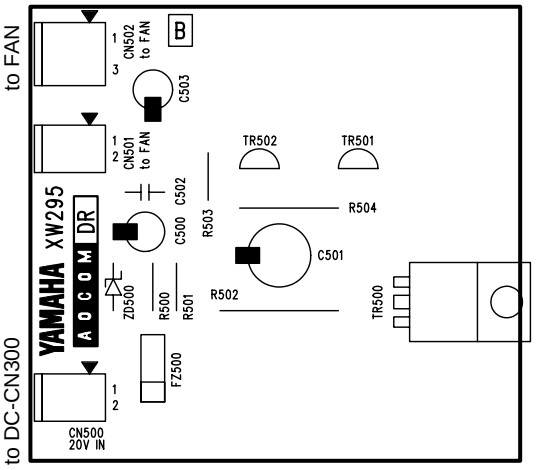

Component side

● PSB Circuit Board

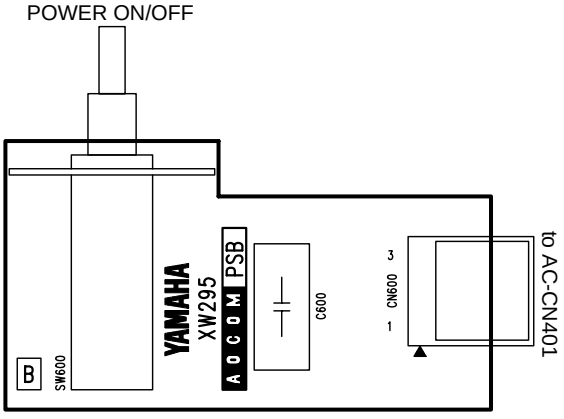

Component side

● IPC4 Circuit Board

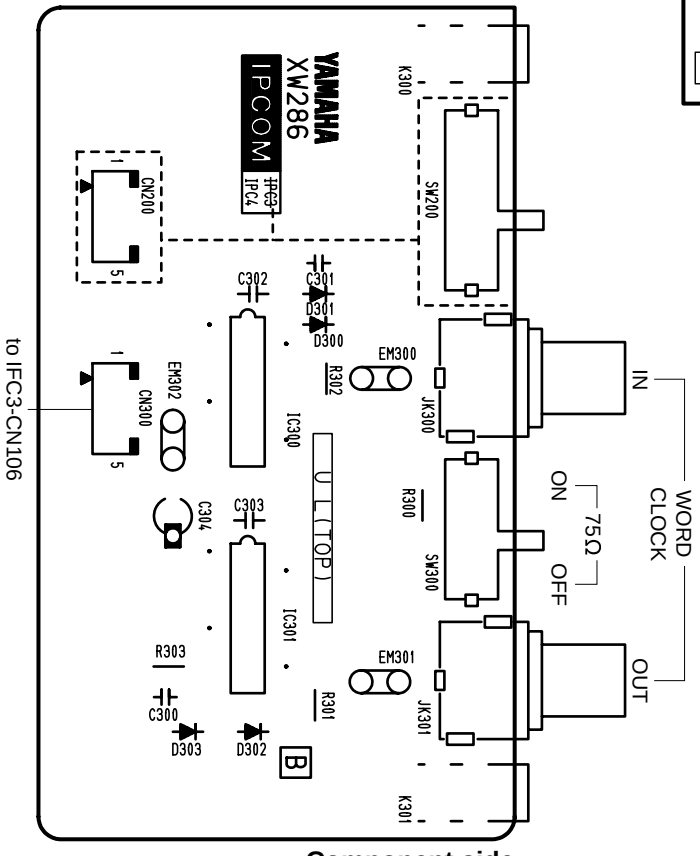

Component side

● LED2 Circuit Board

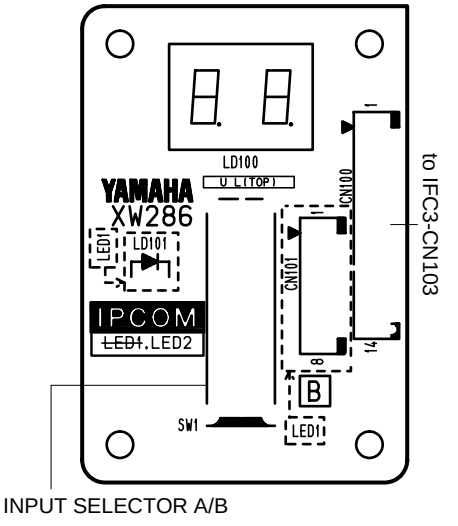

Component side

AC, DR, PSB: 3NA-V412970⚠
IPC4, LED2: 3NA-V491380

●MB1 Circuit Board

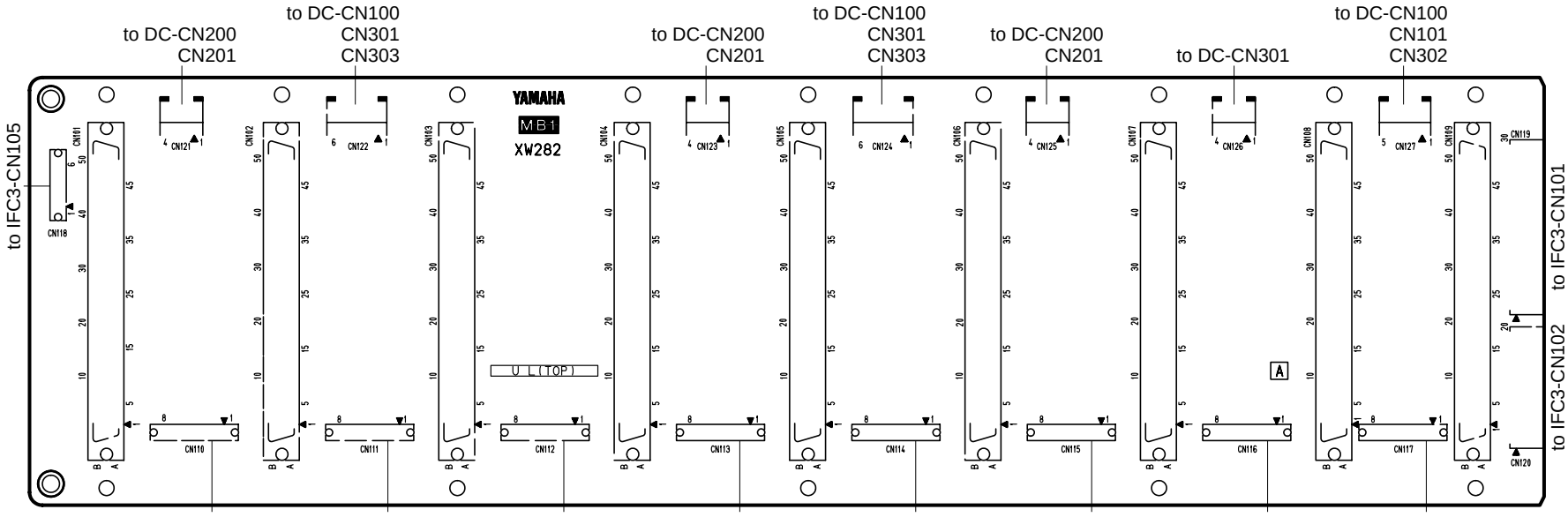

Component side

●DC Circuit Board

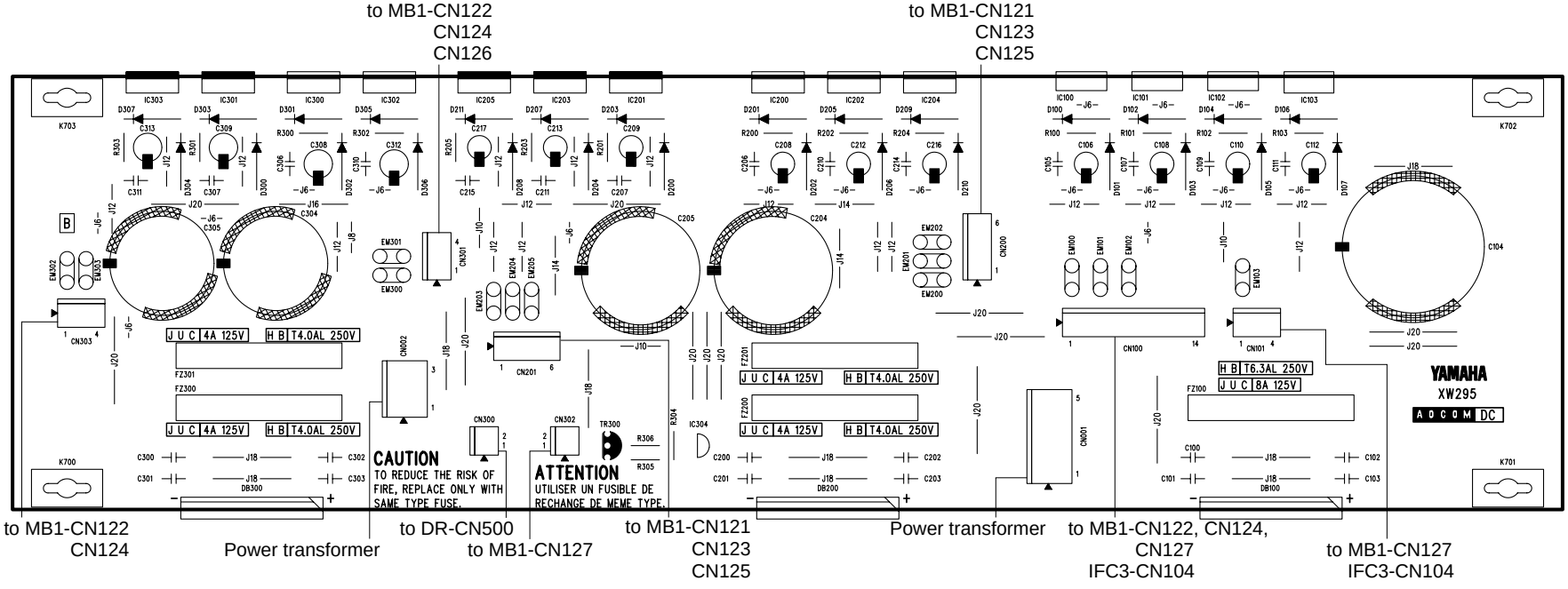

Component side

DC: 3NA-V412970Ⓐ
MB1: 3NA-V412880

● UNC Circuit Board

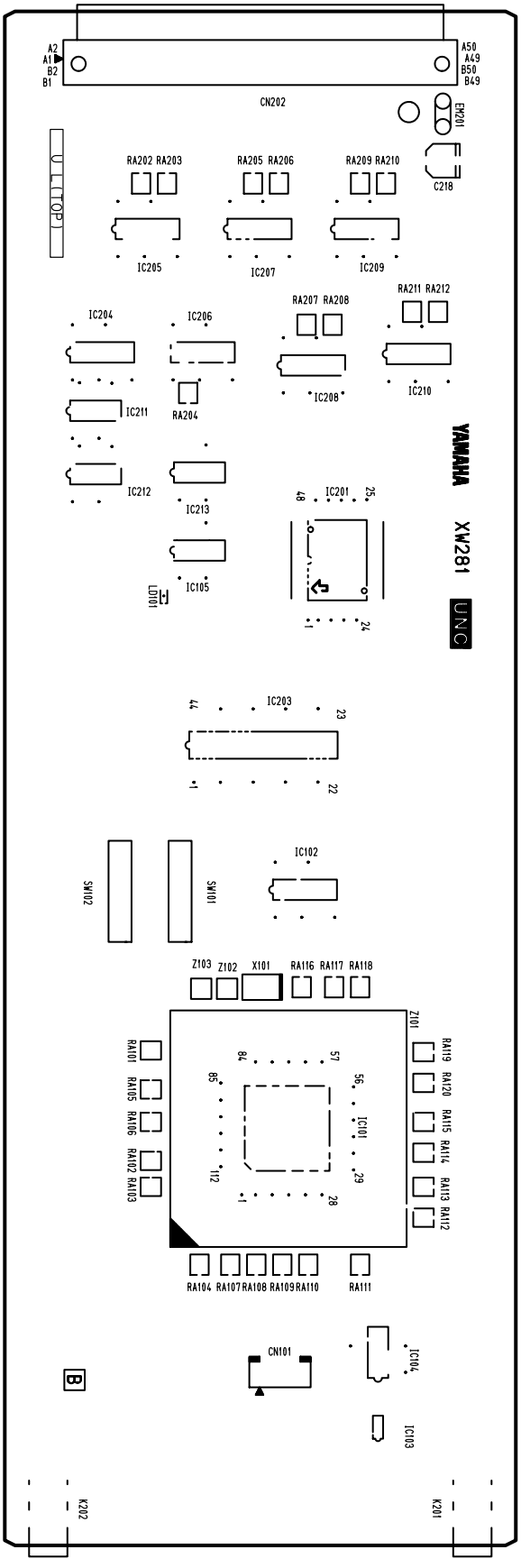

Component side

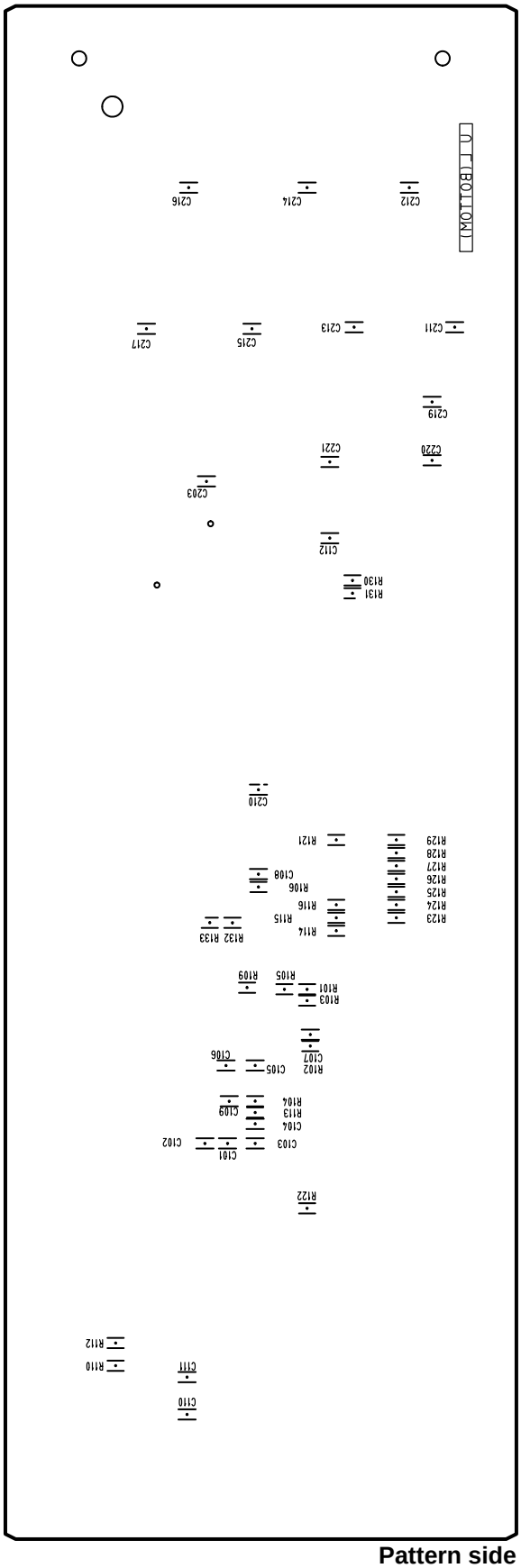

Pattern side

3NA-V412870△2

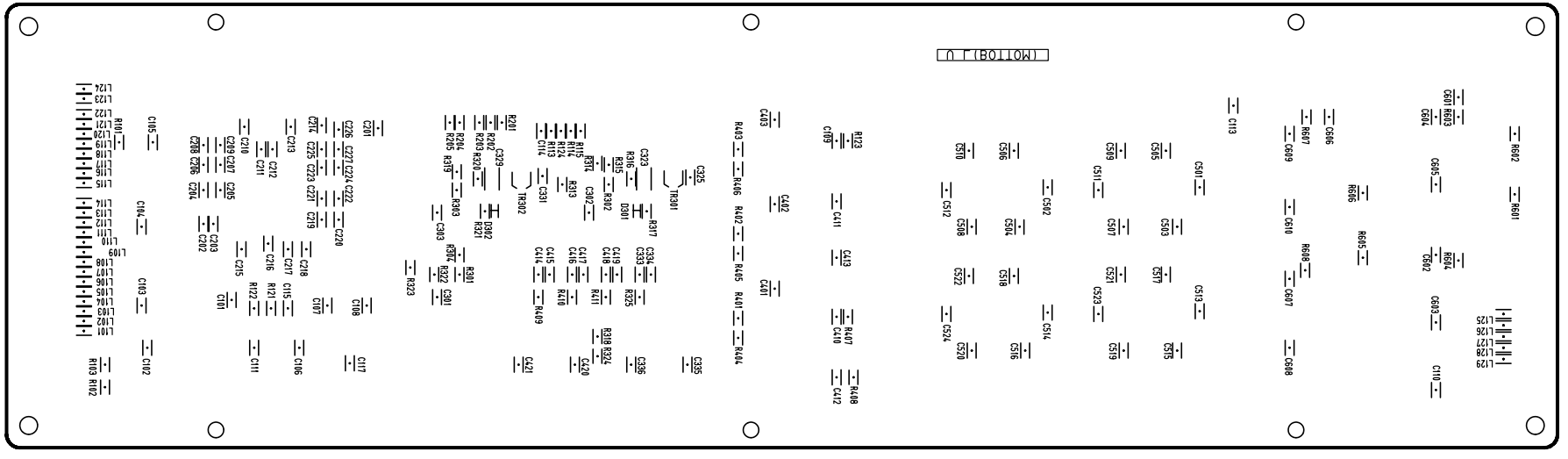

Pattern side

● IFC3 Circuit Board

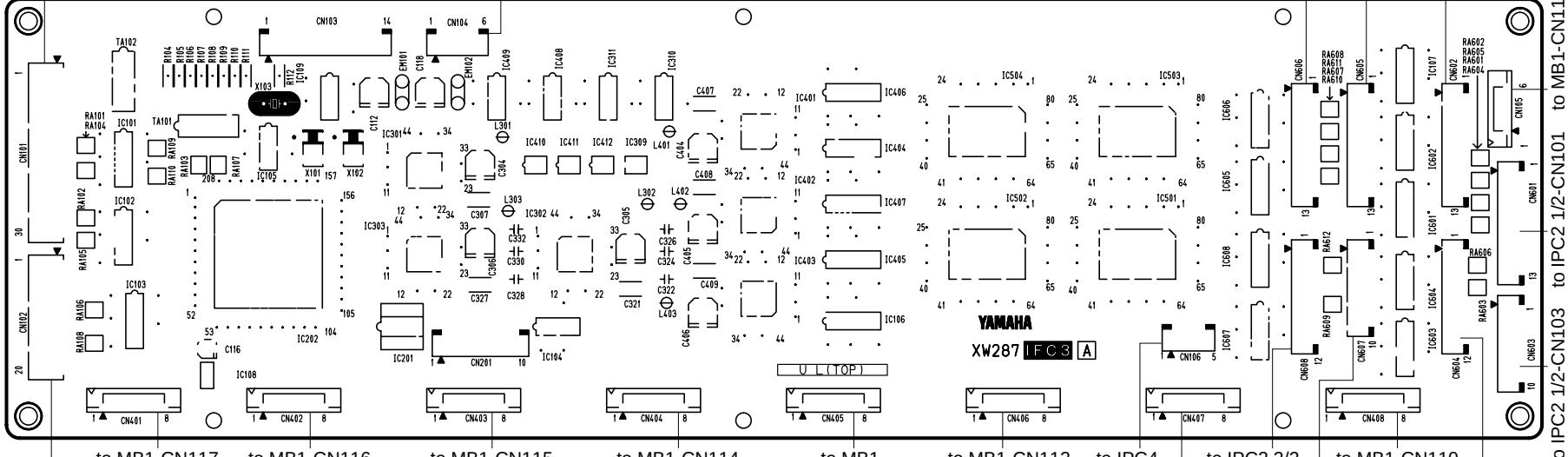

Component side

3NA-V413000

INSPECTION

1. Range of Applicability

These specifications apply to the AO8 and AO8-DA8.

2. Preparations

2-1. Conditions

◇ For details on the connection method, refer to the Test Program Specifications KES-92653.

◇ Unless otherwise specified, the conditions are as follows.

· Set the INPUT SELECTOR switch to A.

· Set WORD CLOCK IN 75 Ω to ON.

2-2 Loading the Firmware

The firmware used must be the “AI8/AO8 Firmware” (managed with the already drawn CD-R assembly drawing (3JL-XY714A0)) of the PM1D System Software matching the version on the cover sheet. For details on the firmware writing method, refer to the Test Program Specifications KES-92653.

2-3. Test Program

For details on the starting method etc., refer to the Test Program Specifications KES-92653.

3. Inspection

3-1. Inspection with Test Program

· Inspect based on the Test Program Specifications KES-92653.

3-2. Jitter Measurement

· Connect the LMY-slot inspection jig Canon terminal to DSA1.

· Set Fs to 48 kHz and 44.1 kHz with the test program and measure the jitter at DSA1.

	Range of tolerance
48 kHz	6 nsec max.
44.1 kHz	5 nsec max.

3-3. Fan Operation Check

· Check that the fan rotates while the power is on.

3-4. Sound

· The connections are as in the diagram below.

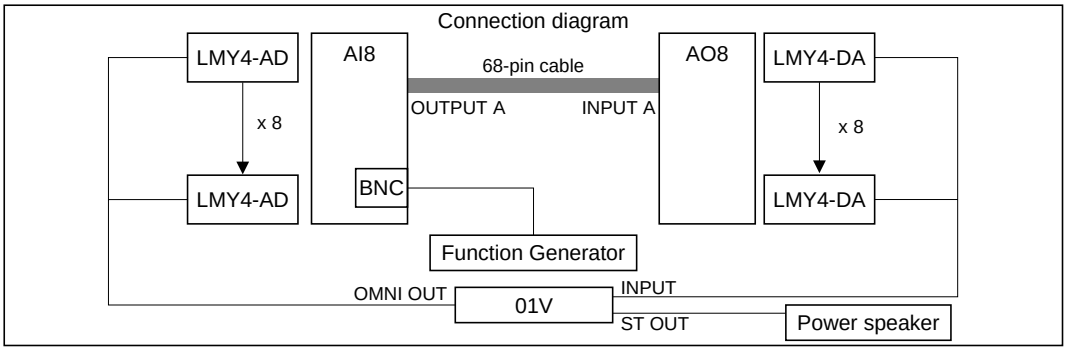

· Set the AI8 and AO8 sheet UNC DIP switch as below. DIP Switch 8 is not used.

	DIP SW						
	1	2	3	4	5	6	7
AI8	OFF	ON	OFF	OFF	ON	ON	ON
AO8	OFF	OFF	OFF	ON	OFF	OFF	OFF

· For 01V, OSC1kHz is output from OMNI1 OUT and the signal input to INPUT is assigned to ST OUT.

· For AO8, insert the inspection LMY4-DA cards in Slot 1-8.

· For AO8-DA8, insert the shipping LMY4-DA cards in Slot 1-8.

(1) Fs = 51.12 kHz (48 kHz + 6.5 %)

· Set the function generator to 51.12 kHz.

· Test listen for 30 seconds at all the output terminals and verify that there is no noise.

(2) Fs = 39.69 kHz (44.1 kHz -10 %)

· Set the function generator to 39.69 kHz.

· Test listen for 30 seconds at all the output terminals and verify that there is no noise.

3-5. Firmware Load Test

Check that it is possible to load the firmware as in 2-2. using the Input B terminal.

4. Factory Settings

· Switch all the sheet UNC DIP switch settings On.

· Front panel

INPUT SELECTOR: A

· Rear panel

WORD CLOCK IN 75 Ω: On

TEST PROGRAM

A. Preparations for Inspection

• Writing the firmware

This equipment requires firmware. When there are changes to the manufacturing processes and program for this equipment, it is necessary to download the new firmware to FlashRom from a PC. (If there is no firmware loaded or its checksum does not match the correct value, when the power is first switched on the LED on UNC flashes at one second intervals.)

The only sheet for which the firmware must be downloaded is UNC. There are two methods for writing this firmware: to write it indirectly using the CS1D or DSP1D RS232C port or to write it directly to the AO8 UNC sheet. The detailed methods are given below.

• Method for writing firmware using the CS1D or DSP1D RS232C port

* It is possible to write the AO8 (UNC) firmware from the PC via the CS1D or DSP1D RS232C port. This is the method normally used.

Software used:	PM1DLOAD within PM1D system software
Firmware used:	AI8/AO8 firmware in PM1D system software
Version used:	PM1DLOAD and the AI8/AO8 firmware are PM1D system software component files with the version number listed on the cover sheet. (Managed with the already drawn CD-R assembly drawing (3JL-XY714A0).)

* For the installation and setting methods, refer to the CS1D Test Program Specifications.

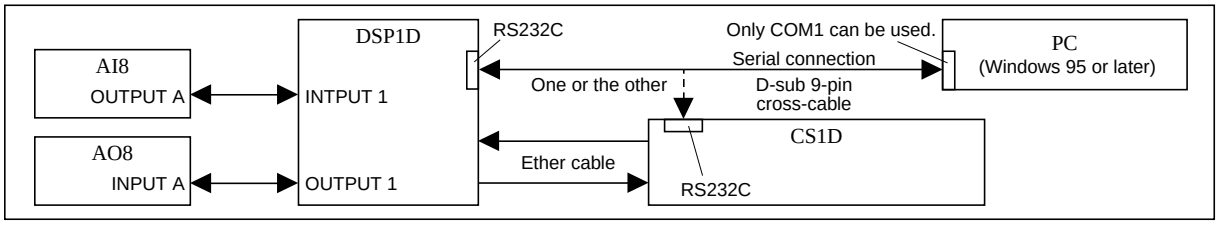

1. Install and set the above reference destination files.
2. Connect as in the figure above. Do not connect any other signal lines. At this time, since data is written to ports other than OUTPUT1, connect only one AO8 or one each of AI8 and AO8. However, to write firmware just to this equipment for a manufacturing process with this equipment, the configuration with only the AO8, DSP1D, and PC is sufficient.
3. Write the firmware to all the units connected with the method listed in the CS1D Test Program Specifications. After the firmware has been written, check that the versions for all the units are the desired versions.

• Method for writing firmware directly to the AO8 UNC

* When there is some kind of problem or the DSP1D is unavailable due to this equipment's production processes and the firmware can not be written with the method on the previous page, use the method below.

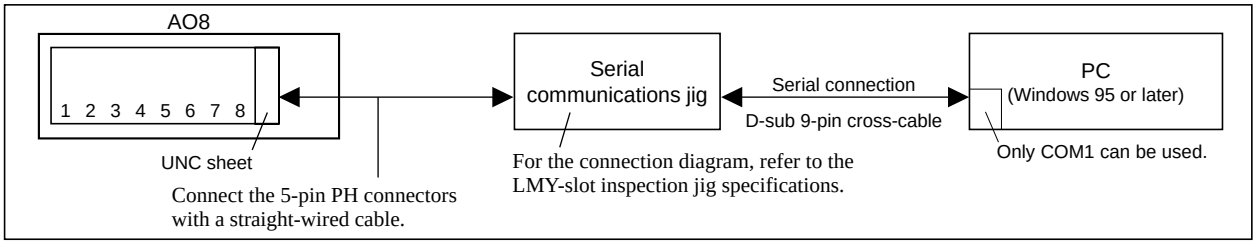

1. Connect the D-sub 9-pin serial cables (cross) and DSP-CHECK board between the 5-pin connector for the target board and the PC. At this time, do not connect other signal lines.
2. After PM1DLOAD starts up, select CardDirect with MODE SELECT, then press OK.
3. Press the Update button in the AO8 item.
4. Select the UNC, then press Write.
5. After writing ends, end PM1DLOAD.
6. Switch off the power for AO8 and remove the PH connector, then switch the power for AO8. DSP1D on again and check that it starts up normally.

• PM1D inspection PC software preparation

Inspection with this device uses special PC software for inspection.
The software versions are as follows

Software used:	PM1D inspection PC software in PM1D system software
Version used:	PM1D system software component files with the version number listed on the cover sheet. (Managed with the already drawn CD-R assembly drawing (3JL-XY714A0).)

For details on the preparation and execution methods, refer to the CS1D Test Program Specifications. Before starting inspection, refer to version.txt in the same directory as the firmware shown on the previous page and input the version character string as instructed.

B. Inspection Method

The inspection configuration is shown in the diagram below.

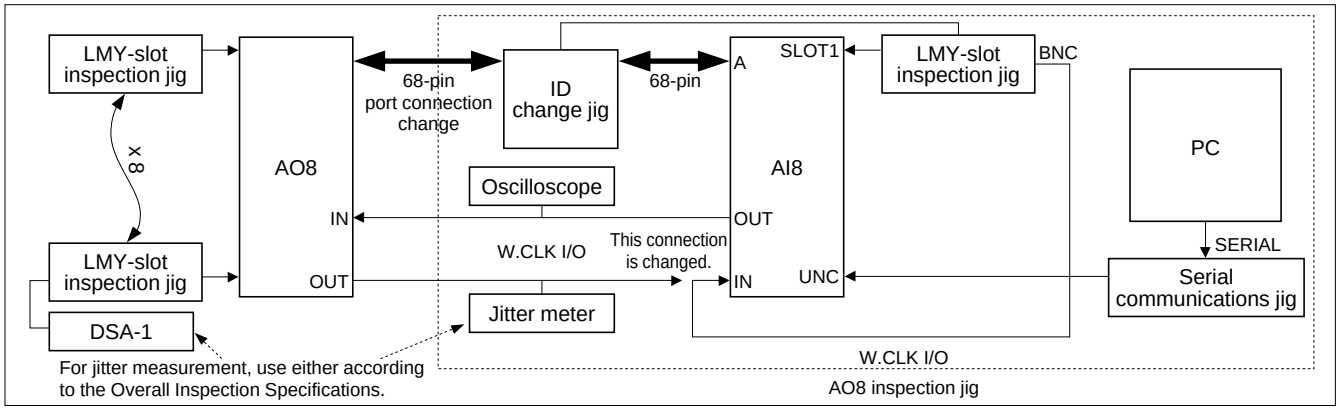

Install the inspection jig to the AO8 to be inspected as in the figure above. Send the inspection commands from the PC via the AI8 to the LMY-slot inspection jig and take in at the PC the results returned from the LMY-slot inspection jig. Always switch on the Phantom switch before starting the inspection. (The pop-up box is displayed on the PM1D inspection PC software when the checks start.)

* Use the LMY-slot inspection jigs inserted into the LMY-slots. For details, see the LMY-slot inspection jig specifications.
* Serial communications jigs are boards that convert the serial interface from the PC. For details, see the LMY-slot inspection jig specifications.
* Set the DIP switches on the ID change jig for AO8 inspection as shown below. For details on the IC change jig, see the LMY-slot inspection jig specifications.

ID change jig DIP switch settings

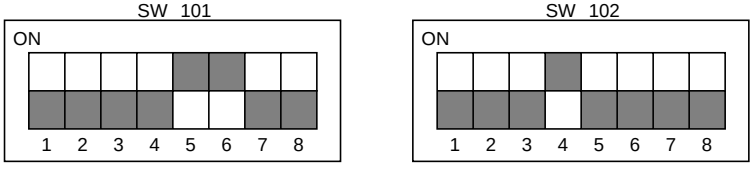

PM1D inspection PC software summary

The AO8 is inspected using PC inspection software. This inspection software is common for AI8/AO8/DSP1D/CS1D. For the basic operation methods, menu screen specifications, etc., see the CS1D Test Program Specifications.
Below is the menu for AO8 inspection.

Input the latest version of AO8 UNC before starting the inspection. (This is necessary for the version check.) For the character string to input, refer to version.txt in the same directory as the AI8/AO8 firmware. Details of each check item and the corresponding PC software are shown on the following pages.

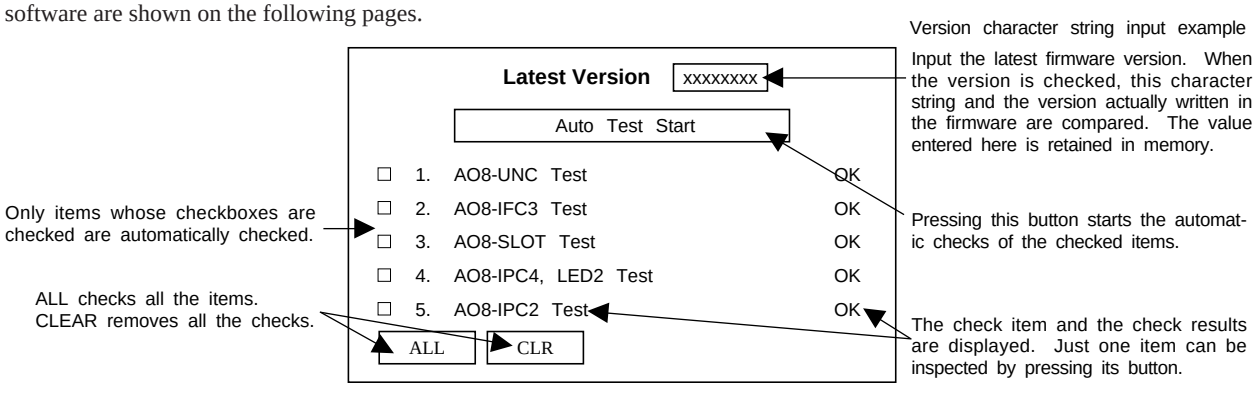

C. Inspection Items

The inspection items are as below. Details of the inspection items are shown on the following pages.

* However, 128 Fs Sync must be normal for the DSP to operate, so there is no special check item.

No.	Item
1	AO8 - UNC test
2	AO8 - IFC3 test
3	AO8 - SLOT test
4	AO8 - IPC4, LED2 test
5	AO8 - IPC2 test

1. AO8 - UNC Test

This test checks around the AO8-UNC.

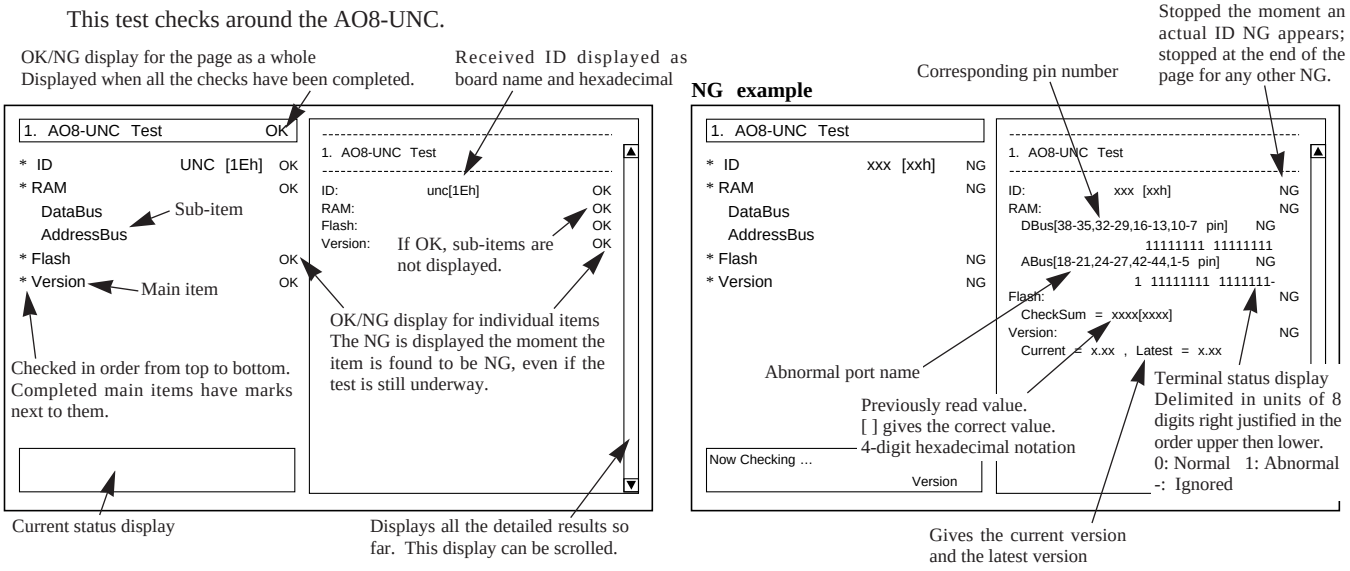

SRAM	OK: LED lit up NG: LED flashes on (0.2 s) - Off (0.2 s) - On (0.2 s) - Off (0.1 s)
Flash	OK: LED lit up NG: LED flashes on (0.1 s) - Off (0.1 s) - On (0.1 s) - Off (0.1 s)

2. AO8 - IFC3 Test

This test checks around the AO8-IFC3.

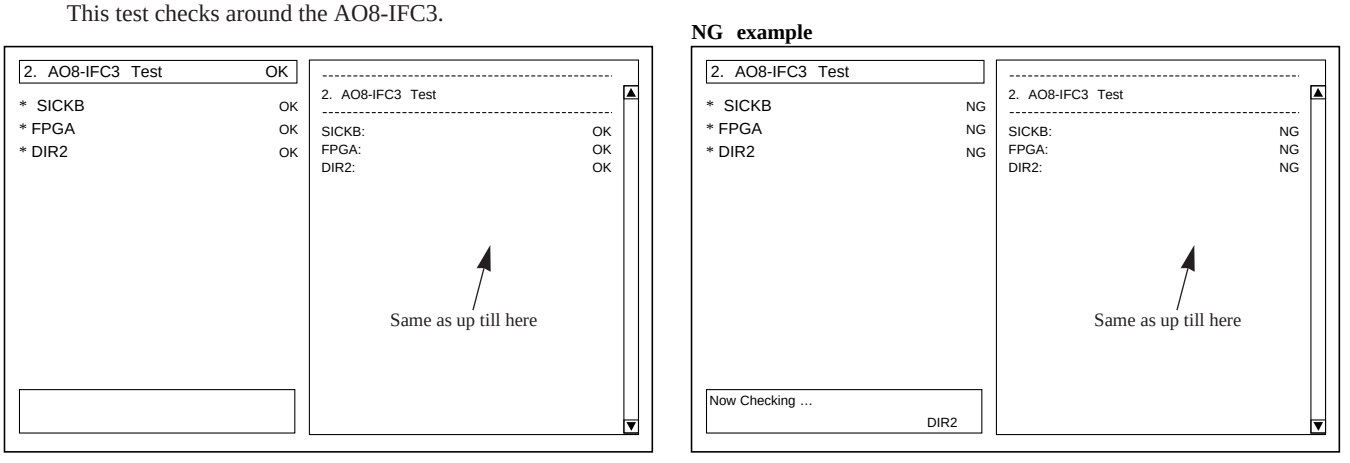

3-1. AO8 - Slot [Initial] Test

Checks slot operation by checking the minimum necessary number of pins.

The results for each slot are displayed in order from the left. A mark is made for each check to show the progress of the checks.
(Blank: Not yet checked; 0: Normal; 1: Abnormal; N: No response)

Stopped the moment an actual Addr.BusTest or DataBusTest NG appears.

Shows which pin is NG; display for 16 pins.
(1: NG; 0: OK)

```
3-1. AO8-SLOT [Initial] Test OK
* Address Bus Test    00000000  OK
* Data Bus Test       00000000  OK
* Voltage Check       00000000  OK
   +20V   00000000
   +15V   00000000
   -15V   00000000
   +5V    00000000
   -5V    00000000
* /CON Line Test      00000000  OK
```

```
3-1. AO8-SLOT [Initial] Test
Address Bus Test:                OK
Data Bus Test:                   OK
Voltage Check:                   OK
/CON Line Test:                  OK
```

First, all the voltages for one slot are checked, then this is repeated for the next slot. (The notation is each voltage [x 8 slots], but the check order is each slot [x all voltages].)

Basically, the same as up till here

NG example

```
3-1. AO8-SLOT [Initial] Test
* Address Bus Test    00000100  NG
* Data Bus Test       00010100  NG
* Voltage Check       00010100  NG
   +20V   00010000
   +15V   00010000
   -15V   00000000
   +5V    00000000
   -5V    00000100
* /CON Line Test      00010100  NG
Now Checking ...
                      /CON Line Test
```

```
3-1. AO8-SLOT [Initial] Test
Address Bus Test:                NG
  SLOT6   11111111  11111111    NG
Data Bus Test:                   NG
  SLOT4   11111111  11111111    NG
  SLOT6   11111111  11111111    NG
Voltage Check:                   NG
  SLOT4                          NG
    +20V   =>  +xx.xxV (-xx.x%)
    +15V   =>  +xx.xxV (+xx.x%)
  SLOT6                          NG
    -5V    =>  +xx.xxV (-xx.x%)
/CON Line Test:     00010100     NG
```

The detected voltage is displayed and the percentage deviation from the ideal state is displayed. This is shown for each slot.

3-2. AO8 - Slot [Clock Line] Test

This test checks around the slot clock.

```
3-2. AO8-SLOT [Clock Line] Test OK
* FS Line Check                 OK
   Fs       00000000
   64Fs     00000000
   256Fs    00000000
```

```
3-2. AO8-SLOT [Clock Line] Test
FS Line Check:                   OK
```

Basically, the same as up till here

NG example

```
3-2. AO8-SLOT [Clock Line] Test
* FS Line Check                 NG
   Fs       00010000
   64Fs     00010000
   256Fs    00010100
Now Checking ...
                      FS Check  256Fs
```

```
3-2. AO8-SLOT [Clock Line] Test
FS Line Check:                   NG
  SLOT4                          NG
    Fs     ->  xx.xxx  kHz      (-xx.x%)
    64Fs   ->  xx.xxx  kHzX64   (+xx.x%)
    256Fs  ->  xx.xxx  kHzX256  (-xx.x%)
  SLOT6                          NG
    256Fs  ->  xx.xxx  kHzX256  (-xx.x%)
```

The detected FS frequency is displayed and the percentage deviation from the ideal state is displayed.
The values for 64 Fs and 256 Fs are displayed in such a way that they can be easily grasped.

3-3. AO8 - Slot [Data Line] Test

This test checks around the serial communications.

```
3-3. AO8-SLOT [Data Line] Test OK
* Digital Signal line Test      OK
   SI       00000000
```

```
3-3. AO8-SLOT [Data Line] Test
Digital Signal Line Test:        OK
```

Basically, the same as up till here

NG example

```
3-3. AO8-SLOT [Data Line] Test
* Digital Signal line Test      NG
   SI       00010000
Now Checking ...
                      SI Test
```

```
3-3. AO8-SLOT [Data Line] Test
Digital Signal Line Test:        NG
  SLOT4                          NG
    SI [a7,b7 pin]
```

The ID change jig digital line change is on the rear.

4. AO8 - IPC4, LED2 test

This test checks around the AO8 - IPC4 and LED2.

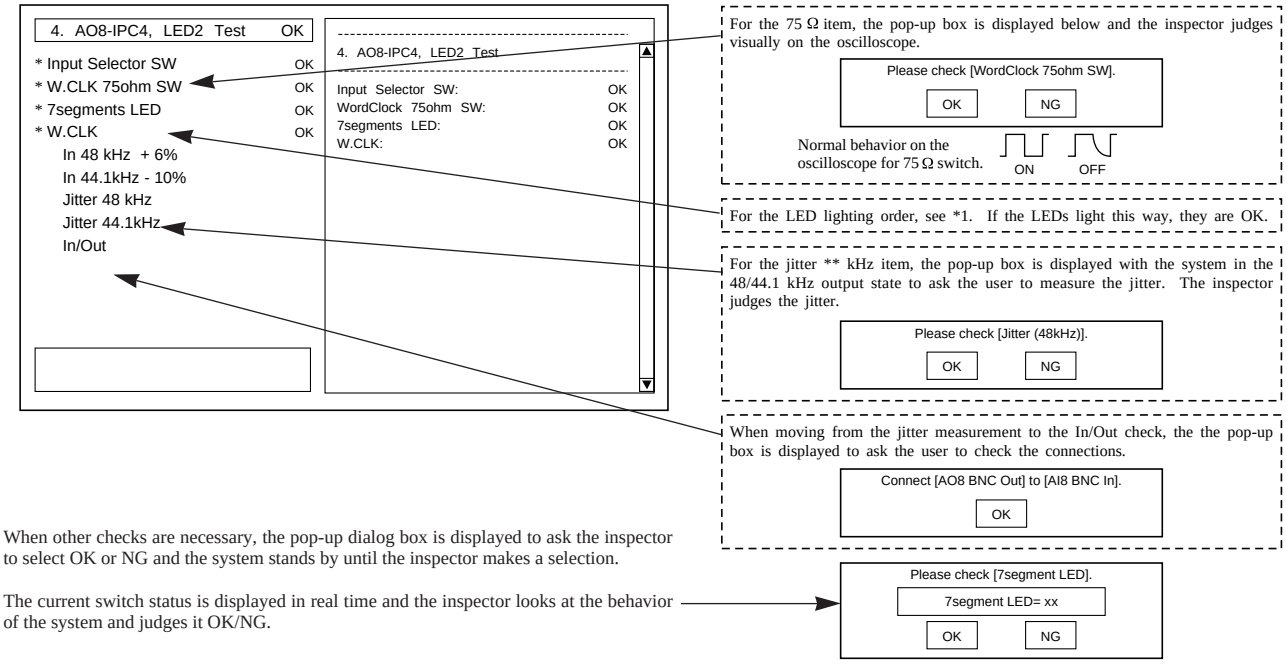

When other checks are necessary, the pop-up dialog box is displayed to ask the inspector to select OK or NG and the system stands by until the inspector makes a selection.

The current switch status is displayed in real time and the inspector looks at the behavior of the system and judges it OK/NG.

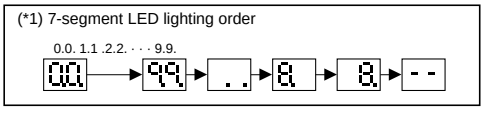

5. AO8 - IPC2 test

This test checks around the AO8 - IPC2. Ports A and B are both checked, so the same procedure is carried out in 5-1 for Port A and in 5-2 for Port B.

NG example

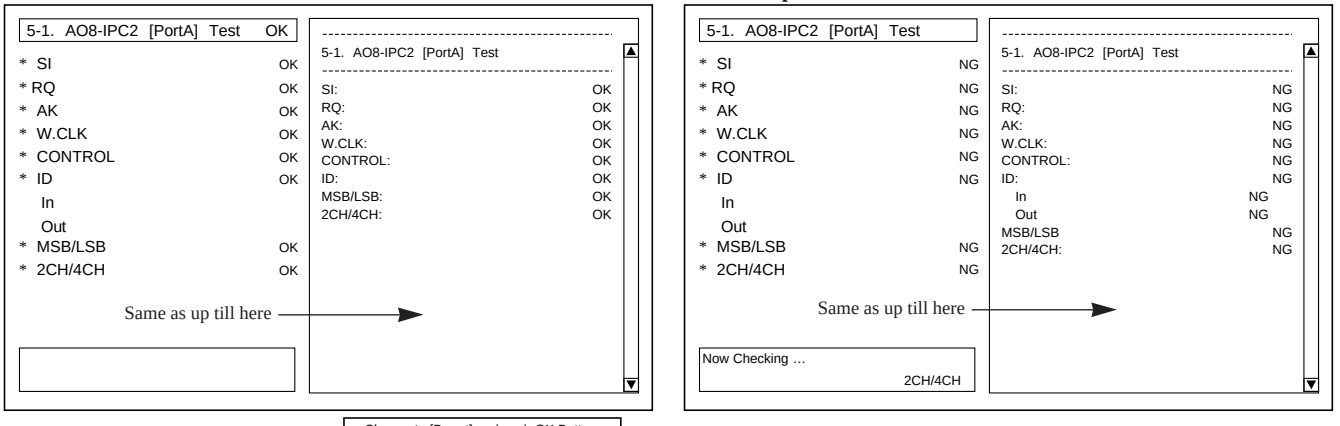

When changing to the next port, a pop-up box like that on the right is displayed.

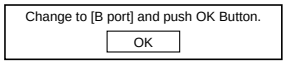

■ ERROR MESSAGES

If an error occurs in the connection to the DSP1D, or if the unit does not lock to the wordclock signal, one of the following error indications appears.

ERROR MESSAGE	DESCRIPTION
E2	The AO8 is connected to the INPUT connector of the DSP1D/DSP1D-EX. Connect the AO8 to the OUTPUT connector.
E3	A cable is disconnected from the INPUT A, B, or C connector on the rear panel, or the connection is made incorrectly. If the connection is proper, replace the cable.
UL	The unit does not lock to the wordclock signal.
UC	The control signal is not being received correctly.
"0.x."	(two dots and the ID number of the OUTPUT connector on the DSP1D/DSP1D-EX) Illuminating dots means that the AO8 is con-nected in Mirror mode from the DSP1D/DSP1D-EX. If ".x ." lights up continuously during Mirror mode operation, the INPUT SELECTOR switch setting matches the setting controlled from the CS1D and the system is operating normally. If the control signal from the CS1D has changed the setting during Mirror mode operation and it does not match the INPUT SELECTOR switch setting any more, this indicator changes in the following order. "0.x." → ". ." → "_.A."(or "_.b.") → ". ." → "0.x." " _.A. " means that the control signal from the CS1D has changed the setting to "A" " _.b. " means that the control signal from the CS1D has changed the setting to "B." During this time period, you can connect or disconnect the cable from the unselected output connector. If you set the INPUT SELECTOR switch so that it matches the setting made via the control signal from the CS1D, " 0.x. " lights up continuously.

ANALOG OUTPUT BOX

AO 8

PARTS LIST

CONTENTS

Notes : DESTINATION ABBREVIATIONS

A:	Australian model	M:	South African model
B:	British model	O:	Chinese model
C:	Canadian model	Q:	South-east Asia model
D:	German model	T:	Taiwan model
E:	European model	U:	U.S.A. model
F:	French model	V:	General export model (110 V)
H:	North European model	W:	General export model (220 V)
I :	Indonesian model	N,X:	General export model
J :	Japanese model	Y:	Export model

WARNING

Components having special characteristics are marked ⚠ and must be replaced with parts having specification equal to those originally installed.

- The numbers in " QTY " show quantities for each unit.
- The parts with " **- -** " in " **PART NO.** " are not available as spare parts.
- The mark " } " in the remarks column indicates that these parts are interchangeable.
- The second letter of the shaded ( ) part number is O, not zero.
- The second letter of the shaded ( ) part number is I, not one.

OVERALL ASSEMBLY

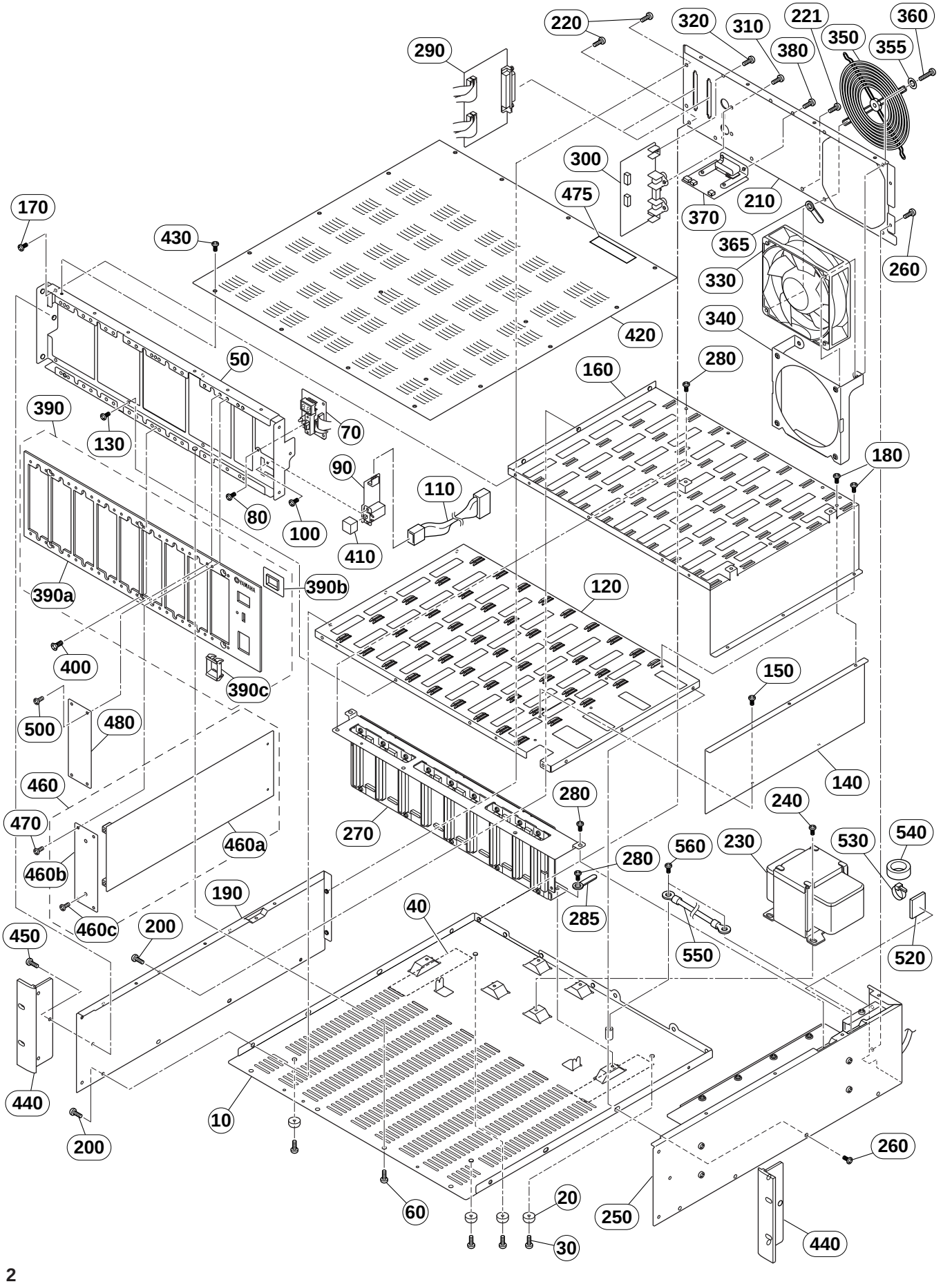

	REF NO.	PART NO.	DESCRIPTION			REMARKS		QTY	RANK
			OVERALL ASSEMBLY			AO8			
		- -	Overall Assembly			J	(V479550)		
		- -	Overall Assembly			U,V	(V479560)		
		- -	Overall Assembly			H,W	(V479570)		
		- -	Overall Assembly			B	(V479580)		
*	10	V4277100	Bottom Chassis						15
	20	CB806590	Leg	BL				4	03
	30	VR138400	Bind Head Tapping Screw-B	4.0X12 MFZN2BL				4	01
*	40	V4278900	PET Sheet					3	02
*	50	V4277800	Front Shassis						08
	60	VC688800	Bind Head Tapping Screw-B	A4.0X8 MFZN2BL				4	01
*	70	V4913600	Circuit Board	AO8 LED2 (IPCOM)					08
	80	EP600230	Bind Head Tapping Screw-B	3.0X6 MFZN2BL				2	01
*	90	V4913700	Circuit Board	AO8 PSB (AOCOM)					07
	100	VB659000	Bind Head Screw	3.0X8 MFZN2BL				2	01
*	110	V5087200	Connector Assembly	VH4P-VH3P #18					05
*	120	V4277900	Chassis	LOWER					11
	130	VC688800	Bind Head Tapping Screw-B	A4.0X8 MFZN2BL				4	01
*	140	V4914400	Shield						06
	150	VP157900	Bind Head Tapping Screw-B	A3.0X6 MFZN2BL				2	01
*	160	V4278000	Chassis	UPPER					08
	170	VC688800	Bind Head Tapping Screw-B	A4.0X8 MFZN2BL				3	01
	180	VP157900	Bind Head Tapping Screw-B	A3.0X6 MFZN2BL				5	01
*	190	V4277200	Side Panel	LEFT					09
	200	VC688800	Bind Head Tapping Screw-B	A4.0X8 MFZN2BL				7	01
*	210	V4279000	Rear Panel						10
	220	VC688800	Bind Head Tapping Screw-B	A4.0X8 MFZN2BL				6	01
	221	VC688800	Bind Head Tapping Screw-B	A4.0X8 MFZN2BL					01
⚠ *	230	XW261A00	Power Transformer			J			17
⚠ *	230	XW262A00	Power Transformer			U,V			18
⚠ *	230	XW263B00	Power Transformer			H,B,W			17
	240	VC688800	Bind Head Tapping Screw-B	A4.0X8 MFZN2BL				4	01
	250	- -	Side Panel Assembly	RIGHT		J	(V479360)		
	250	- -	Side Panel Assembly	RIGHT		U,V	(V479370)		
	250	- -	Side Panel Assembly	RIGHT		H,W	(V479380)		
	250	- -	Side Panel Assembly	RIGHT		B	(V479390)		
	260	VC688800	Bind Head Tapping Screw-B	A4.0X8 MFZN2BL				7	01
	270	- -	Mother Assembly				(V479300)		
	280	VC688800	Bind Head Tapping Screw-B	A4.0X8 MFZN2BL				7	01
	285	CB817510	Cord Binder	S-14B				1	03
*	290	V4130200	Circuit Board	AO8 IPC2				2	27
*	300	V4129300	Circuit Board	AO8 IPC4 (IPCOM)					14
	310	VS863000	Bonding Screw	3.0X6 MFZN2BL				2	01
	320	EG340290	Bind Head Screw	A4.0X6 MFZN2BL				2	01
*	330	V5789100	Motor	DC KDE1208PTS3-6		Fan			09
*	340	V5107200	Fan Guide						06
	350	VK949100	Fan Guard	FG-08UL					06
	355	ET800070	Toothed Lock Washer	A4.0 MFZN2BL				4	01
	360	VG605800	Bind Head Screw	4.0X35 MFZN2BL				4	01
	365	CB817510	Cord Binder	S-14B				2	03
*	370	V4649200	Circuit Board	AO8 DR (AOCOM)					07
	380	VN413300	Bonding Tapping Screw-B	3.0X8 MFZN2BL				2	01
	390	- -	Front Panel Assembly				(V479200)		
*	390a	V4279300	Front Panel						16
*	390b	V4278800	LED Cover	7 SEG.					05
	390c	VL813000	Escutcheon, Power Switch						03
	400	VA221200	Flat Head Screw	4.0X8 MFZN2BL				6	01
	410	VL812900	Power Switch Knob			POWER ON/OFF			03
*	420	V4278200	Top Panel						13
	430	VC688800	Bind Head Tapping Screw-B	A4.0X8 MFZN2BL				17	01
*	440	V4278700	Mount Bracket					2	08
	450	VS153600	Oval Head Screw	4.0X8 MFZN2BL				6	01
	460	- -	UNC Card Assembly				(V479500)		
*	460a	V4128700	Circuit Board	AI8 UNC					31
*	460b	V4278600	UNC Plate						04
	460c	VS154500	Bonding Screw	4.0X8 MFZN2BL				2	01
	470	VS863000	Bonding Screw	3.0X6 MFZN2BL				4	01
	475	- -	Label, Caution				(V533510)		
*	480	V4278500	Blank Panel					8	07
	500	VS863000	Bonding Screw	3.0X6 MFZN2BL				32	01

*: New Parts

RANK: Japan only

REF NO.	PART NO.	DESCRIPTION			REMARKS	QTY	RANK
520	**CB835590**	Holder	TMS-20			2	01
530	**CB069250**	Cord Holder	BK-1			2	01
540	**VC362700**	Ferrite Core	FR25/15/12-1400L			2	04
550	**- -**	Connector Assembly	Earth #18		(V572480)		
560	**VP156800**	Bind Head Screw	A4.0X8 MFZN2BL			2	01
		ACCESSORIES					
*	**V4789400**	Cable, SCSI	DHK-HA2-3000				27

SIDE PANEL ASSEMBLY

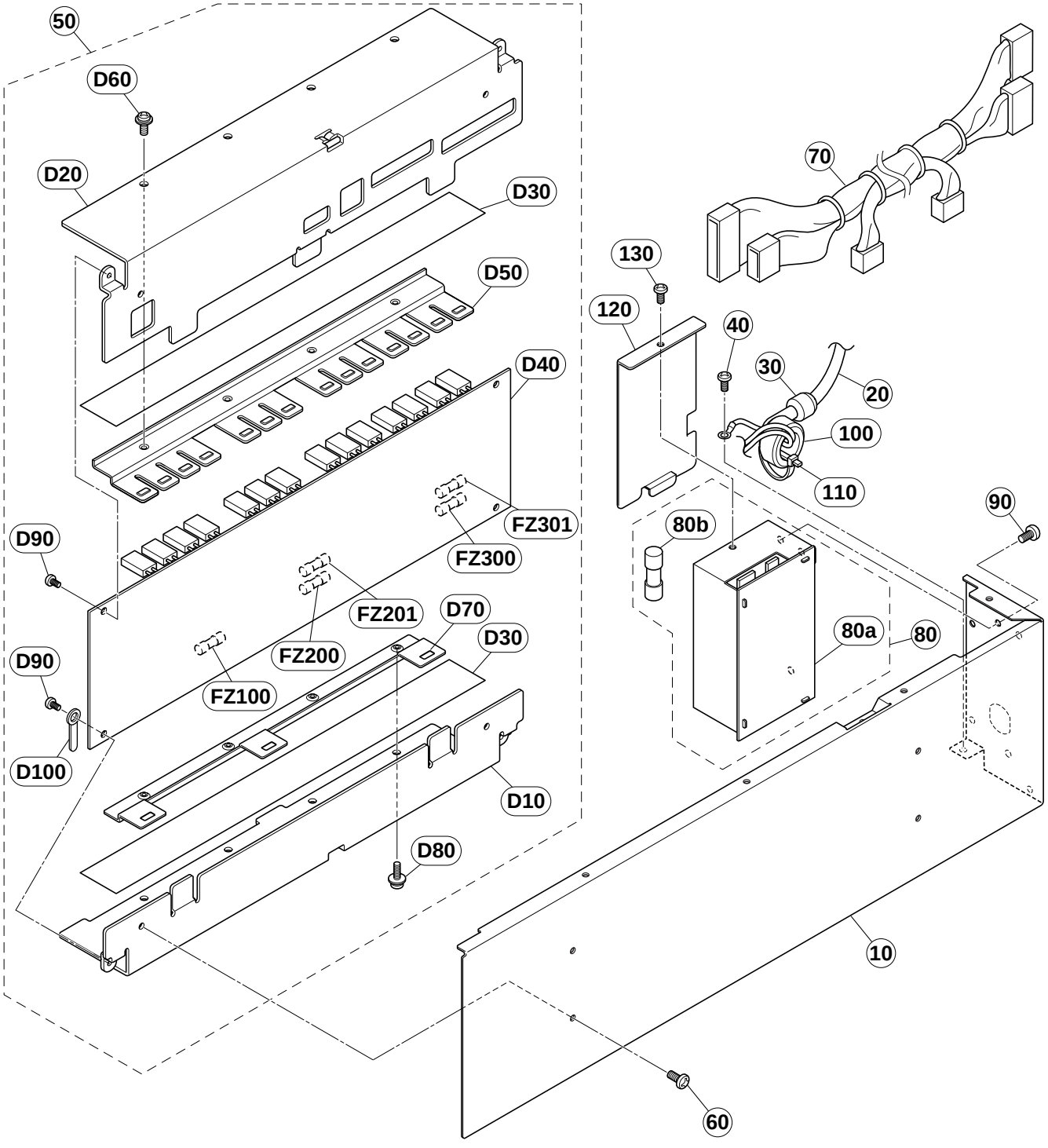

	REF NO.	PART NO.	DESCRIPTION			REMARKS	QTY	RANK
			SIDE PANEL ASSEMBLY	RIGHT		AO8		
		- -	Side Panel Assembly	RIGHT		J (V479360)		
		- -	Side Panel Assembly	RIGHT		U,V (V479370)		
		- -	Side Panel Assembly	RIGHT		H,W (V479380)		
		- -	Side Panel Assembly	RIGHT		B (V479390)		
*	10	**V5302700**	Side Panel	RIGHT		J		12
*	10	**V5302800**	Side Panel	RIGHT		U,V		12
*	10	**V5302900**	Side Panel	RIGHT		H,B,W		12
⚠	20	**VS228900**	AC Cord Assembly	2P 15A		J		09
⚠	20	**VS229000**	AC Cord Assembly	3P 10A		U,V		10
⚠	20	**VS229100**	AC Cord Assembly	3P 6A		H,W		10
⚠	20	**VS229200**	AC Cord Assembly	3P 10A		B		11
	30	**CB806850**	Cord Strain Relief	SR-6N3-4		J		02
	30	**CB811230**	Cord Strain Relief	SR-6N-4		U,V		02
	30	**CB032840**	Cord Strain Relief	SR-5N-4		H,B,W		03
	40	**VP156800**	Bind Head Screw	A4.0X8 MFZN2BL		U,H,B,V,W		01
*	50	**V4794300**	DC Assembly			J,U,V		41
*	50	**V4794400**	DC Assembly			H,B,W		39
	60	**EG340290**	Bind Head Screw	A4.0X6 MFZN2BL			4	01
*	70	**V5099200**	Connector Assembly	PH-DC				16
	80	- -	AC Assembly			J,U,V (V479470)		
	80	- -	AC Assembly			H,B,W (V479480)		
*	80a	**V4648700**	Circuit Board	AO8 AC (AOCOM)				07
⚠	80b	**KB003620**	Fuse	4.00A JU		J,U,V		01
⚠	80b	**KB003090**	Fuse	3.15A S		H,B,W		01
	90	**VC688800**	Bind Head Tapping Screw-B	A4.0X8 MFZN2BL			3	01
	100	**VC362700**	Ferrite Core	FR25/15/12-1400L				04
	110	**CB069250**	Cord Holder	BK-1				01
*	120	**V4914300**	AC Shield Cover					03
	130	**VC688800**	Bind Head Tapping Screw-B	A4.0X8 MFZN2BL				01
*		**V4794300**	DC Assembly			J,U,V		41
*		**V4794400**	DC Assembly			H,B,W		39
*	D10	**V4914800**	Heat Sink	DC LOW				07
*	D20	**V4914900**	Heat Sink	DC UP				07
*	D30	**V4276400**	Isolation Sheet	DC			2	05
*	D40	**V4649000**	Circuit Board	AO8 DC (AOCOM)				30
*	D50	**V4276600**	Holder	TR				09
	D60	**EL200020**	Pan Head Screw	SP 4.0X8 MFZN2Y			4	01
*	D70	**V4914600**	Holder	BR				07
	D75	**CB817510**	Cord Binder	S-14B			3	03
	D80	**EL200020**	Pan Head Screw	SP 4.0X8 MFZN2Y			4	01
	D90	**EP600230**	Bind Head Tapping Screw-B	3.0X6 MFZN2BL			4	01
	D100	**CB817510**	Cord Binder	S-14B				03
⚠	FZ100	**VS823300**	Fuse	8.00A JU		J,U,V		02
⚠	FZ100	**KB003250**	Fuse	6.30A S		H,B,W		01
⚠	FZ200	**KB003630**	Fuse	5.00A JU		J,U,V		01
⚠	FZ200	**KB003100**	Fuse	4.00A S		H,B,W		01
⚠	FZ201	**KB003630**	Fuse	5.00A JU		J,U,V		01
⚠	FZ201	**KB003100**	Fuse	4.00A S		H,B,W		01
⚠	FZ300	**KB003630**	Fuse	5.00A JU		J,U,V		01
⚠	FZ300	**KB003100**	Fuse	4.00A S		H,B,W		01
⚠	FZ301	**KB003630**	Fuse	5.00A JU		J,U,V		01
⚠	FZ301	**KB003100**	Fuse	4.00A S		H,B,W		01

*: New Parts

RANK: Japan only

MOTHER ASSEMBLY

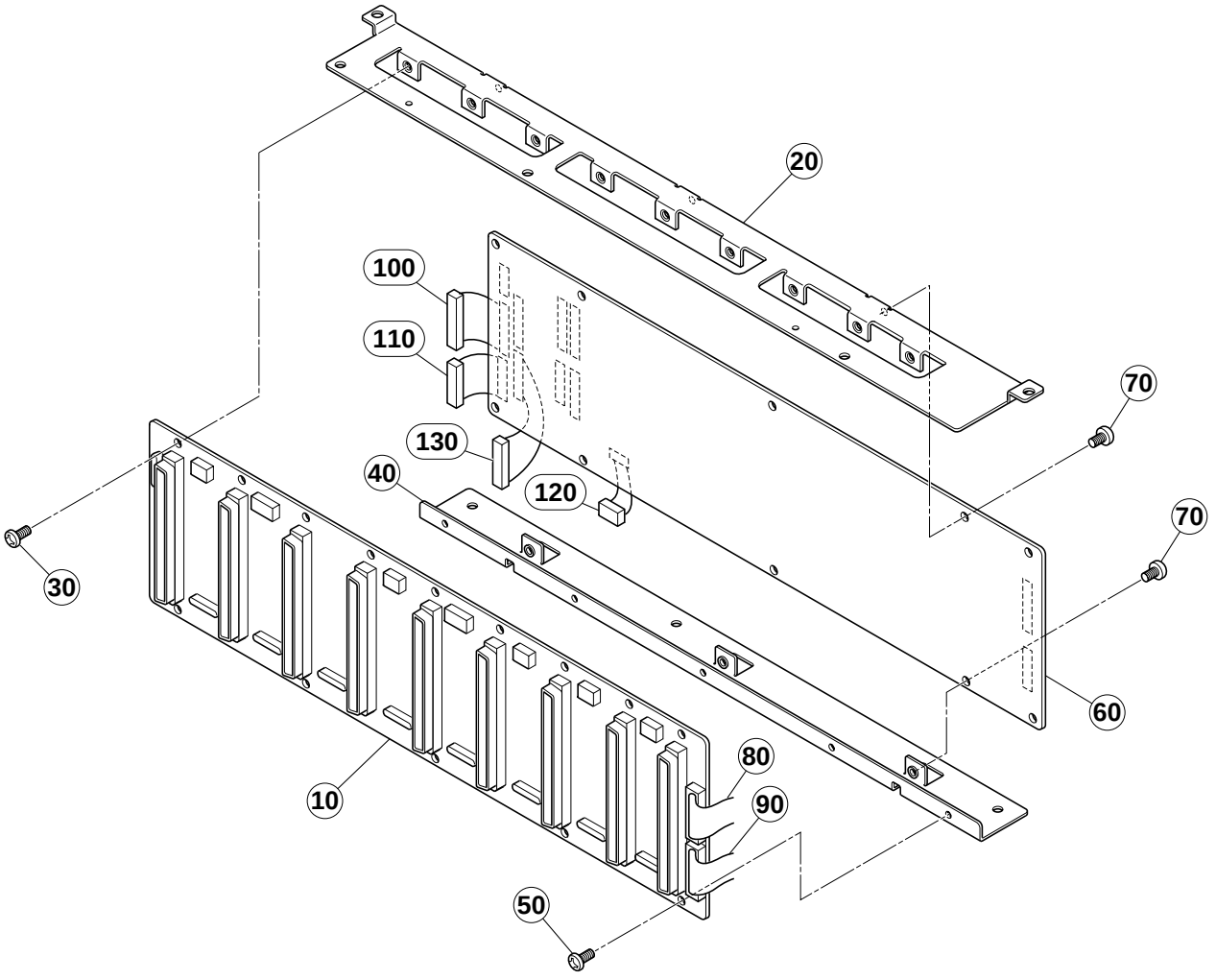

	REF NO.	PART NO.	DESCRIPTION			REMARKS	QTY	RANK
		- -	MOTHER ASSEMBLY			AO8 (V479300)		
*	10	**V4128800**	Circuit Board	AI8 UNC				21
*	20	**V4278300**	Support Metal	1				09
	30	**EP600230**	Bind Head Tapping Screw-B	3.0X6 MFZN2BL			9	01
*	40	**V4278100**	Support Metal	2				07
	50	**EP600230**	Bind Head Tapping Screw-B	3.0X6 MFZN2BL			5	01
*	60	**V4130000**	Circuit Board	AO8 IFC3				54
	65	**CB817510**	Cord Binder	S-14B			2	03
	70	**EP600230**	Bind Head Tapping Screw-B	3.0X6 MFZN2BL			6	01
	80	- -	Cable, FFC	P=1.25-K-20-80		(V508550)		
	90	- -	Cable, FFC	P=1.25-K-30-80		(V508560)		
	100	- -	Connector Assembly	PH&PH 13P 80 #28		(V508800)	4	
	110	- -	Connector Assembly	PH&PH 10P 80 #28		(V508810)	2	
	120	- -	Connector Assembly	PH&PH 5P 200L #28		(VN38360)		
	130	- -	Connector Assembly	PH&PH 12P 80 #28		(V508820)	2	

*: New Parts

RANK: Japan only

ELECTRICAL PARTS

	REF NO.	PART NO.	DESCRIPTION			REMARKS	QTY	RANK
			ELECTRICAL PARTS			AO8		
*		**V4648700**	Circuit Board	AO8 AC (AOCOM)		(XW295B0)		07
*		**V4649000**	Circuit Board	AO8 DC (AOCOM)		(XW295B0)		30
*		**V4649200**	Circuit Board	AO8 DR (AOCOM)		(XW295B0)		07
*		**V4913700**	Circuit Board	AO8 PSB (AOCOM)		(XW295B0)		07
*		**V4130200**	Circuit Board	AO8 IPC2		(XW289A0)		27
*		**V4130000**	Circuit Board	AO8 IFC3		(XW287A0)		54
*		**V4129300**	Circuit Board	AO8 IPC4 (IPCOM)		(XW286B0)		14
*		**V4913600**	Circuit Board	AO8 LED2 (IPCPM)		(XW286B0)		08
*		**V4128800**	Circuit Board	AI8 MB1		(XW282A0)		21
*		**V4128700**	Circuit Board	AI8 UNC		(XW281B0)		31
*		**V4648700**	Circuit Board	AO8 AC (AOCOM)		(XW295B0)		07
*		**V4649000**	Circuit Board	AO8 DC (AOCOM)		(XW295B0)		30
*		**V4649200**	Circuit Board	AO8 DR (AOCOM)		(XW295B0)		07
*		**V4913700**	Circuit Board	AO8 PSB (AOCOM)		(XW295B0)		07
		VH610100	Bind Head Screw	3.0X14 MFZN2BL				01
		VR144900	Bonding Tapping Screw-B	3.0X6 MFZN2BL				
		VA078900	Jumper Wire	0.55				
*		**V4276300**	AC Shield Metal					04
*		**V4797200**	Transistor Holder					07
		VN057300	Heat Sink					08
*		**V5101700**	Insulation Sheet					01
*	C104	**V4871100**	Electrolytic Cap.	33000 16.0V				06
	C106	**UR838100**	Electrolytic Cap.	100.00 16.0V				01
	C108	**UR838100**	Electrolytic Cap.	100.00 16.0V				01
	C110	**UR838100**	Electrolytic Cap.	100.00 16.0V				01
	C112	**UR838100**	Electrolytic Cap.	100.00 16.0V				01
*	C204	**V4871300**	Electrolytic Cap.	22000 16				05
*	C205	**V4871300**	Electrolytic Cap.	22000 16				05
	C208	**UR838100**	Electrolytic Cap.	100.00 16.0V				01
	C209	**UR838100**	Electrolytic Cap.	100.00 16.0V				01
	C212	**UR838100**	Electrolytic Cap.	100.00 16.0V				01
	C213	**UR838100**	Electrolytic Cap.	100.00 16.0V				01
	C216	**UR838100**	Electrolytic Cap.	100.00 16.0V				01
	C217	**UR838100**	Electrolytic Cap.	100.00 16.0V				01
	C304	**VR499300**	Electrolytic Cap.	4700 35.0V				05
	C305	**VR499300**	Electrolytic Cap.	4700 35.0V				05
	C308	**UR848100**	Electrolytic Cap.	100.00 25.0V				01
	C309	**UR848100**	Electrolytic Cap.	100.00 25.0V				01
	C312	**UR848100**	Electrolytic Cap.	100.00 25.0V				01
	C313	**UR848100**	Electrolytic Cap.	100.00 25.0V				01
*	C400	**V5170300**	Capacitor	0.220 275V U.C.S				01
	C500	**UR838100**	Electrolytic Cap.	100.00 16.0V				01
	C501	**UR848220**	Electrolytic Cap.	220.00 25.0V				01
	C503	**UR838100**	Electrolytic Cap.	100.00 16.0V				01
	C600	**V3311600**	Capacitor-KH	0.010 250V J.U.C.S				01
		VS589000	Ceramic Capacitor-E	4700P 500V M				01
		FG644100	Ceramic Capacitor-F	0.0100 50V Z				01
		UA355100	Mylar Capacitor	0.1000 50V J				01
	CN001	**LB932050**	Base Post Connector	VH 5P TE				01
	CN002	**LB932030**	Base Post Connector	VH 3P TE				01
	CN100	**VE352600**	Connector Base Post	PH-14P TE				01
	CN101	**VB390000**	Connector Base Post	PH 4P TE				01
	CN200	**VB390200**	Connector Base Post	PH 6P TE				01
	CN201	**VB390200**	Connector Base Post	PH 6P TE				01
	CN300	**VB389800**	Connector Base Post	PH 2P TE				01
	CN301	**VB390000**	Connector Base Post	PH 4P TE				01
	CN302	**VB389800**	Connector Base Post	PH 2P TE				01
	CN303	**VB390000**	Connector Base Post	PH 4P TE				01
	CN400	**VG879900**	Base Post Connector	VA 2P TE				01
	CN401	**LB933040**	Base Post Connector	VH 4P SE				01
	CN402	**LB933030**	Base Post Connector	VH 3P SE				01
	CN500	**VB858100**	Connector Base Post	PH 2P SE				01
	CN502	**VB858200**	Connector Base Post	PH 3P SE				01
	CN600	**LB933030**	Base Post Connector	VH 3P SE				01
	D100	**VB481900**	Diode	11ES4				01
	-107	**VB481900**	Diode	11ES4				01
	D200	**VB481900**	Diode	11ES4				01
	-211	**VB481900**	Diode	11ES4				01

*: New Parts

RANK: Japan only

REF NO.	PART NO.	DESCRIPTION			REMARKS	QTY	RANK
D300	**VB481900**	Diode	11ES4				01
-307	**VB481900**	Diode	11ES4				01
DB100	**VM621400**	Diode Stack	RBV-1506				05
DB200	**VT682400**	Diode Stack	D6SB60L 6.0A 600V				04
DB300	**VT682400**	Diode Stack	D6SB60L 6.0A 600V				04
EM100	**FZ006970**	LC Filter	LS MT Y223NB				02
-103	**FZ006970**	LC Filter	LS MT Y223NB				02
EM200	**FZ006970**	LC Filter	LS MT Y223NB				02
-205	**FZ006970**	LC Filter	LS MT Y223NB				02
EM300	**FZ006920**	LC Filter	LS MT B271KB				01
-303	**FZ006920**	LC Filter	LS MT B271KB				01
FZ100	**VP206500**	Fuse Holder	EYF-52BC				01
FZ200	**VP206500**	Fuse Holder	EYF-52BC				01
FZ201	**VP206500**	Fuse Holder	EYF-52BC				01
FZ300	**VP206500**	Fuse Holder	EYF-52BC				01
FZ301	**VP206500**	Fuse Holder	EYF-52BC				01
FZ400	**VP206500**	Fuse Holder	EYF-52BC				01
FZ500	**VG297000**	IC Protector	ICP-F20				02
IC100	**XH672A00**	IC	PQ05RF2		REGULATOR +5V 2A		04
-102	**XH672A00**	IC	PQ05RF2		REGULATOR +5V 2A		04
* IC103	**XW196A00**	IC	UPC2933HF		REGULATOR +3.3V		03
IC200	**XR607A00**	IC	UPC2405AHF		REGULATOR +5V		04
IC201	**XK309A00**	IC	NJM7905FA		REGULATOR -5V		03
IC202	**XR607A00**	IC	UPC2405AHF		REGULATOR +5V		04
IC203	**XK309A00**	IC	NJM7905FA		REGULATOR -5V		03
IC204	**XR607A00**	IC	UPC2405AHF		REGULATOR +5V		04
IC205	**XK309A00**	IC	NJM7905FA		REGULATOR -5V		03
IC300	**XR608A00**	IC	UPC2415AHF		REGULATOR +15V		04
IC301	**XD854A00**	IC	NJM7915FA		REGULATOR -15V		03
IC302	**XR608A00**	IC	UPC2415AHF		REGULATOR +15V		04
IC303	**XD854A00**	IC	NJM7915FA		REGULATOR -15V		03
IC304	**XD631A00**	IC	PST518B-TP		SYSTEM RESET		02
K700	**BB069510**	Land Terminal	A-8				01
-703	**BB069510**	Land Terminal	A-8				01
* L400	**V4122100**	Line Filter	PLH10A7003R6P02				02
R502	**VC757100**	Metal Oxide Film Resistor	22.0 2W J				01
R504	**VC740100**	Metal Oxide Film Resistor	1.0 1W J				01
	HF456330	Carbon Resistor	3.3K 1/4 J				01
	HF456470	Carbon Resistor	4.7K 1/4 J				01
	HF457100	Carbon Resistor	10.0K 1/4 J				01
⚠ SW600	**V3127000**	Push Switch	ESB92S23B J.U.C.S		POWER ON/OFF		02
TR300	**IA101590**	Transistor	2SA1015 O,Y				01
TR500	**IB059600**	Transistor	2SB596LBB O,Y				04
TR501	**IC1815M0**	Transistor	2SC1815 Y,GR				01
TR502	**IC1815M0**	Transistor	2SC1815 Y,GR				01
ZD500	**VQ554100**	Zener Diode	MTZJ7.5A 7.5V				01
*	**V4130200**	Circuit Board	AO8 IPC2		(XW289A0)		27
C108	**UF038100**	Electrolytic Cap. (chip)	100 16V				01
	UB245100	Monolithic Ceramic Cap.	F 0.100 25V Z				01
* CN100	**V4158600**	Connector	230R(SCSI) 68P SE		INPUT A/B		06
CN101	**VF283100**	Connector Base Post	PH 13P TE				01
CN102	**VF283100**	Connector Base Post	PH 13P TE				01
CN103	**VB390600**	Connector Base Post	PH 10P TE				01
CN104	**VB390800**	Connector Base Post	PH 12P TE				01
DA100	**VV556300**	Diode Array	DAN217 0.3A X2				01
-156	**VV556300**	Diode Array	DAN217 0.3A X2				01
EM100	**VL534100**	LC Filter	NFA81R00C101				05
-102	**VL534100**	LC Filter	NFA81R00C101				05
EM104	**VL534100**	LC Filter	NFA81R00C101				05
-106	**VL534100**	LC Filter	NFA81R00C101				05
EM108	**FZ006970**	LC Filter	LS MT Y223NB				02
IC100	**XU815A00**	IC	DS26C32ATMX		LINE RECEIVER		06
-103	**XU815A00**	IC	DS26C32ATMX		LINE RECEIVER		06
IC104	**XT487A00**	IC	TC74VHC245F		TRANSCEIVER		03
IC105	**XT487A00**	IC	TC74VHC245F		TRANSCEIVER		03
IC106	**XU815A00**	IC	DS26C32ATMX		LINE RECEIVER		06
IC107	**XU996A00**	IC	AM26LS31CNSR		LINE DRIVER		05
RA100	**RE047100**	Resistor Array	10KX4				01
-103	**RE047100**	Resistor Array	10KX4				01

*: New Parts

RANK: Japan only

	REF NO.	PART NO.	DESCRIPTION			REMARKS	QTY	RANK
		RD254100	Carbon Resistor (chip)	10.0 0.1 J				01
		RD255150	Carbon Resistor (chip)	150.0 0.1 J				01
		RD256100	Carbon Resistor (chip)	1.0K 0.1 J				01
		RD257100	Carbon Resistor (chip)	10.0K 0.1 J				01
		RD257220	Carbon Resistor (chip)	22.0K 0.1 J				01
		RD257470	Carbon Resistor (chip)	47.0K 0.1 J				01
*		V4130000	Circuit Board	AO8 IFC3		(XW287A0)		54
	C112	UF038100	Electrolytic Cap. (chip)	100 16V				01
	C116	UF017220	Electrolytic Cap. (chip)	22 6.3V				01
	C118	UF038100	Electrolytic Cap. (chip)	100 16V				01
	C304	UF037470	Electrolytic Cap. (chip)	47 16V				01
	-306	UF037470	Electrolytic Cap. (chip)	47 16V				01
	C404	UF037470	Electrolytic Cap. (chip)	47 16V				01
	-406	UF037470	Electrolytic Cap. (chip)	47 16V				01
		UB051220	Monolithic Ceramic Cap.	SL 22P 50V J				01
		UB245100	Monolithic Ceramic Cap.	F 0.100 25V Z				01
		UB245220	Monolithic Ceramic Cap.	F 0.220 25V Z				01
		UB445330	Monolithic Ceramic Cap.	F 0.330 16V Z				01
		VR327300	Mylar Capacitor (chip)	0.0820 16V J				01
	CN101	VQ045900	Connector, FFC	52044 30P SE				02
	CN102	VQ045000	Connector, FFC	52044 20P SE				01
	CN103	VE352600	Connector Base Post	PH-14P TE				01
	CN104	VB390200	Connector Base Post	PH 6P TE				01
	CN105	VF728300	Wire Trap	52147 6P TE				01
	CN106	VB390100	Connector Base Post	PH 5P TE				01
	CN201	VB390600	Connector Base Post	PH 10P TE				01
	CN401	VK025200	Wire Trap	52147 8P TE				01
	-408	VK025200	Wire Trap	52147 8P TE				01
	CN601	VF283100	Connector Base Post	PH 13P TE				01
	CN602	VF283100	Connector Base Post	PH 13P TE				01
	CN603	VB390600	Connector Base Post	PH 10P TE				01
	CN604	VB390800	Connector Base Post	PH 12P TE				01
	CN605	VF283100	Connector Base Post	PH 13P TE				01
	CN606	VF283100	Connector Base Post	PH 13P TE				01
	CN607	VB390600	Connector Base Post	PH 10P TE				01
	CN608	VB390800	Connector Base Post	PH 12P TE				01
	EM101	FZ006970	LC Filter	LS MT Y223NB				02
	EM102	FZ006970	LC Filter	LS MT Y223NB				02
	IC101	XT487A00	IC	TC74VHC245F		TRANSCEIVER		03
	-103	XT487A00	IC	TC74VHC245F		TRANSCEIVER		03
*	IC104	IS000800	IC	HD74LV08AFPEL		AND		01
*	IC105	XY102A00	IC	HD74LVU04AFPEL		INVERTER		01
	IC106	XT487A00	IC	TC74VHC245F		TRANSCEIVER		03
	IC107	XT487A00	IC	TC74VHC245F		TRANSCEIVER		03
*	IC108	XY094A00	IC	LT1118CST-2.5		REGULATOR		08
*	IC201	XW239A00	IC	EPC1PC8		EPROM 1M		09
*	IC202	XY089A00	IC	EPF10K30EQC208-3		FPGA		22
*	IC202	XY217A00	IC	EPF10K50EQC208		FPGA		25
	IC301	XG948E00	IC	YM3436DK		DIR2		11
	-303	XG948E00	IC	YM3436DK		DIR2		11
*	IC309	XW422A00	IC	M51953AFP		SYSTEM RESET		01
*	IC310	IS000800	IC	HD74LV08AFPEL		AND		01
*	IC311	IS000400	IC	HD74LV04AFPEL		INVERTER		01
	IC401	XG948E00	IC	YM3436DK		DIR2		11
	-403	XG948E00	IC	YM3436DK		DIR2		11
	IC404	XT487A00	IC	TC74VHC245F		TRANSCEIVER		03
	-407	XT487A00	IC	TC74VHC245F		TRANSCEIVER		03
*	IC408	IS000400	IC	HD74LV04AFPEL		INVERTER		01
*	IC409	IS000800	IC	HD74LV08AFPEL		AND		01
*	IC410	XW422A00	IC	M51953AFP		SYSTEM RESET		01
*	-412	XW422A00	IC	M51953AFP		SYSTEM RESET		01
	IC501	XU235A00	IC	SGH609080F-47F		ATSC		10
	-504	XU235A00	IC	SGH609080F-47F		ATSC		10
	IC601	XT487A00	IC	TC74VHC245F		TRANSCEIVER		03
	-608	XT487A00	IC	TC74VHC245F		TRANSCEIVER		03
	L101	VS740100	Chip Inductance	BLM21B751S 2125				03
	-124	VS740100	Chip Inductance	BLM21B751S 2125				03
	L301	GE300610	Ferrite Bead	BL02RN1-R62T4				01
	-303	GE300610	Ferrite Bead	BL02RN1-R62T4				01

*: New Parts

RANK: Japan only

	REF NO.	PART NO.	DESCRIPTION			REMARKS	QTY	RANK
	L401	GE300610	Ferrite Bead	BL02RN1-R62T4				01
	-403	GE300610	Ferrite Bead	BL02RN1-R62T4				01
	RA101	RE048100	Resistor Array	100KX4				01
	RA102	RE048100	Resistor Array	100KX4				01
	RA103	RE047100	Resistor Array	10KX4				01
	RA104	RE048100	Resistor Array	100KX4				01
	RA105	RE048100	Resistor Array	100KX4				01
	RA106	RE047100	Resistor Array	10KX4				01
	-110	RE047100	Resistor Array	10KX4				01
	RA601	RE047100	Resistor Array	10KX4				01
	-612	RE047100	Resistor Array	10KX4				01
*	SC201	VV047100	IC Socket	DICF-8CS-E				01
	TA101	VQ248400	Transistor Array	TD62783AF				04
	TA102	VQ248500	Transistor Array	TD62381F				04
	X101	VZ568200	Quartz Crystal Unit	22.5792MHz DSO751S				06
	X102	VZ568300	Quartz Crystal Unit	24.576MHz DSO751S				06
	X103	VI927300	Quartz Crystal Unit	20.0000MHz AT-49				03
		RD154270	Carbon Resistor (chip)	27.0 1/4 J				01
		RD254470	Carbon Resistor (chip)	47.0 0.1 J				01
		RD255100	Carbon Resistor (chip)	100.0 0.1 J				01
		RD155330	Carbon Resistor (chip)	330.0 1/4 J				01
		RD255470	Carbon Resistor (chip)	470.0 0.1 J				01
*		VV375100	Carbon Resistor (chip)	750.0 0.1 D				01
		RD256100	Carbon Resistor (chip)	1.0K 0.1 J				01
		VV315200	Carbon Resistor (chip)	1.5K 0.1 D				01
*		VV320200	Carbon Resistor (chip)	2.0K 0.1 D				01
		RD256330	Carbon Resistor (chip)	3.3K 0.1 J				01
*		VV333200	Carbon Resistor (chip)	3.3K 0.1 D				01
		RD257100	Carbon Resistor (chip)	10.0K 0.1 J				01
		RD258100	Carbon Resistor (chip)	100.0K 0.1 J				01
		RD259100	Carbon Resistor (chip)	1.0M 0.1 J				01
*		V4129300	Circuit Board	AO8 IPC4 (IPCOM)		(XW286B0)		14
*		V4913600	Circuit Board	AO8 LED2 (IPCOM)		(XW286B0)		08
	C304	UR838100	Electrolytic Cap.	100.00 16.0V				01
		FG651330	Ceramic Capacitor-SL	33P 50V J				01
		FG652100	Ceramic Capacitor-SL	100P 50V J				01
		VT439600	Monolithic Ceramic Cap.	0.100 50V Z				01
	CN100	VE352600	Connector Base Post	PH-14P TE				01
	CN300	VB390100	Connector Base Post	PH 5P TE				01
	D300	VB941200	Diode	1SS133,1SS176				01
	-303	VB941200	Diode	1SS133,1SS176				01
	EM300	FZ006920	LC Filter	LS MT B271KB				01
	EM301	FZ006920	LC Filter	LS MT B271KB				01
	EM302	FZ006970	LC Filter	LS MT Y223NB				02
	IC300	XE737A00	IC	SN75124N		LINE RECEIVER		05
	IC301	XE683A00	IC	SN75121		LINE DRIVER		05
	JK300	VI552200	BNC Connector	YKS11-0 1P		WORD CLOCK IN		05
	JK301	VI552200	BNC Connector	YKS11-0 1P		WORD CLOCK OUT		05
	K300	VI474400	Terminal Plate					01
	K301	VI474400	Terminal Plate					01
*	LD100	V4078200	LED Display	LNM423AS01		UNIT NO.		06
*	SP100	V4411600	Spacer	7 SEG. 2S				01
	SW1	VG837400	Slide Switch	SSSB04		INPUT SELECTOR		03
	SW300	VQ907900	Slide Switch	SSSU112-S06N-1		WORD CLOCK 75ohm OFF/ON		01
		HF753470	Carbon Resistor	4.7 1/4 J				01
		HF754470	Carbon Resistor	47.0 1/4 J				01
		HF754750	Carbon Resistor	75.0 1/4 J				01
		HF756220	Carbon Resistor	2.2K 1/4 J				01
*		V4128800	Circuit Board	AI8 MB1		(XW282A0)		21
	CN101	VU328200	Plug	PHEC 100P TE		SLOT 1-8,UNC Card		05
	-109	VU328200	Plug	PHEC 100P TE				05
	CN110	VI878600	Cable Holder	51048 8P TE				01
	-117	VI878600	Cable Holder	51048 8P TE				01
	CN118	VI878400	Cable Holder	51048 6P TE				01
	CN119	VQ045900	Connector, FFC	52044 30P SE				02
	CN120	VQ045000	Connector, FFC	52044 20P SE				01
	CN121	VB858300	Connector Base Post	PH 4P SE				01
	CN122	VB858500	Connector Base Post	PH 6P SE				01

*: New Parts

RANK: Japan only

	REF NO.	PART NO.	DESCRIPTION			REMARKS	QTY	RANK
	CN123	VB858300	Connector Base Post	PH 4P SE				01
	CN124	VB858500	Connector Base Post	PH 6P SE				01
	CN125	VB858300	Connector Base Post	PH 4P SE				01
	CN126	VB858300	Connector Base Post	PH 4P SE				01
	CN127	VB858400	Connector Base Post	PH 5P SE				01
	W110	- -	Ribbon Cable	P=2.0 #26 8P 140L		(V507960)		
	-117	- -	Ribbon Cable	P=2.0 #26 8P 140L		(V507960)		
	W118	- -	Ribbon Cable	P=2.0 #26 6P 140L		(V510880)		
*		V4128700	Circuit Board	AI8 UNC		(XW281B0)		31
	C218	UF038100	Electrolytic Cap. (chip)	100 16V				01
		FG652120	Ceramic Capacitor	120P 50V K				01
		FG612560	Ceramic Capacitor	560P 50V K				01
		UB012470	Monolithic Ceramic Cap.	B 470P 50V K				01
		UB245100	Monolithic Ceramic Cap.	F 0.100 25V Z				01
	CN101	VB390100	Connector Base Post	PH 5P TE				01
	CN202	VT640300	Receptacle	PHEC 100P SE				04
	EM201	FZ006970	LC Filter	LS MT Y223NB				02
*	IC101	XY715A00	IC	PM1D42 V1.01		CPU		10
	IC102	XT487A00	IC	TC74VHC245F		TRANSCEIVER		03
	IC103	XP226A00	IC	IC-PST591DMT		SYSTEM RESET		03
*	IC104	IS000800	IC	HD74LV08AFPEL		AND		01
*	IC105	IS000400	IC	HD74LV04AFPEL		INVERTER		01
*	IC201	XV685A00	IC	MBM29F400BC-70PFTN		FLASH ROM 4M		11
	IC203	XV729A00	IC	IDT71016S15Y-TR		RAM 1M		09
	IC204	XT487A00	IC	TC74VHC245F		TRANSCEIVER		03
	-210	XT487A00	IC	TC74VHC245F		TRANSCEIVER		03
*	IC211	IS013810	IC	SN74LV138ANSR		DECODER		01
*	IC212	IS013810	IC	SN74LV138ANSR		DECODER		01
*	IC213	IS000800	IC	HD74LV08AFPEL		AND		01
	K201	VI474400	Terminal Plate					01
	K202	VI474400	Terminal Plate					01
*	LD101	V3990300	LED (chip)	TLSU1008 RE		FOR TEST		01
	RA101	RE047100	Resistor Array	10KX4				01
	-120	RE047100	Resistor Array	10KX4				01
	RA202	RE048100	Resistor Array	100KX4				01
	-212	RE048100	Resistor Array	100KX4				01
	SW102	VQ949900	Switch	SSGM18151A		FUNCTION		03
*	X101	V3990700	Ceramic Resonator	CSTCC7.16MG0H6-TC				01
		RD250000	Carbon Resistor (chip)	0.0 0.0 J				01
		RD255220	Carbon Resistor (chip)	220.0 0.1 J				01
		RD256300	Carbon Resistor (chip)	3.0K 0.1 J				01
		RD257100	Carbon Resistor (chip)	10.0K 0.1 J				01
⚠ *		XW261A00	Power Transformer			J		17
⚠ *		XW262A00	Power Transformer			U,V		18
⚠ *		XW263B00	Power Transformer			H,B,W		17
*		V5789100	Motor	DC KDE1208PTS3-6		Fan		09
⚠		VS228900	AC Cord Assembly	2P 15A		J		09
⚠		VS229000	AC Cord Assembly	3P 10A		U,V		10
⚠		VS229100	AC Cord Assembly	3P 6A		H,W		10
⚠		VS229200	AC Cord Assembly	3P 10A		B		11
⚠	FZ400	KB003620	Fuse	4.00A JU		J,U,V		01
⚠	FZ400	KB003090	Fuse	3.15A S		H,B,W		01
⚠	FZ100	VS823300	Fuse	8.00A JU		J,U,V		02
⚠	FZ100	KB003250	Fuse	6.30A S		H,B,W		01
⚠	FZ200	KB003630	Fuse	5.00A JU		J,U,V		01
⚠	FZ200	KB003100	Fuse	4.00A S		H,B,W		01
⚠	FZ201	KB003630	Fuse	5.00A JU		J,U,V		01
⚠	FZ201	KB003100	Fuse	4.00A S		H,B,W		01
⚠	FZ300	KB003630	Fuse	5.00A JU		J,U,V		01
⚠	FZ300	KB003100	Fuse	4.00A S		H,B,W		01
⚠	FZ301	KB003630	Fuse	5.00A JU		J,U,V		01
⚠	FZ301	KB003100	Fuse	4.00A S		H,B,W		01

*: New Parts

RANK: Japan only