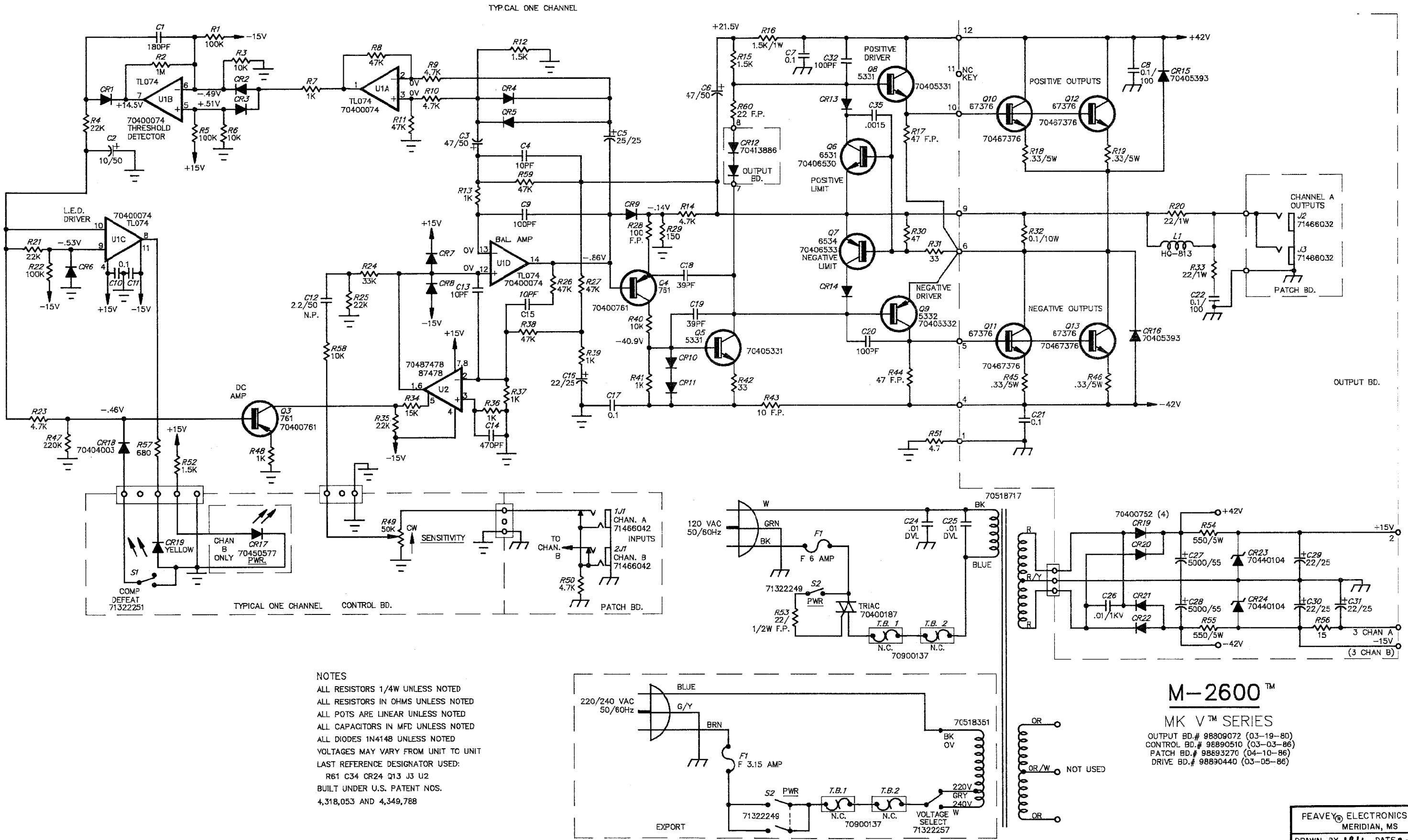

NOTES

ALL RESISTORS 1/4W UNLESS NOTED
ALL RESISTORS IN OHMS UNLESS NOTED
ALL POTS ARE LINEAR UNLESS NOTED
ALL CAPACITORS IN MFD UNLESS NOTED
ALL DIODES 1N4148 UNLESS NOTED
VOLTAGES MAY VARY FROM UNIT TO UNIT
LAST REFERENCE DESIGNATOR USED:
R61 C34 CR24 Q13 J3 U2
BUILT UNDER U.S. PATENT NOS.
4,318,053 AND 4,349,788

M-2600™

MK V™ SERIES

OUTPUT BD.# 98809072 (03-19-80)
CONTROL BD.# 98890510 (03-03-86)
PATCH BD.# 98893270 (04-10-86)
DRIVE BD.# 98890440 (03-05-86)

©1987 PEAVEY® ELECTRONICS CORP. PRINTED IN U.S.A.

P/N 81510320

PEAVEY® ELECTRONICS CORP.
MERIDIAN, MS

DRAWN BY JRH	DATE 2-25-87
C.B. CK.	
CK. BY	
APPR. BY	

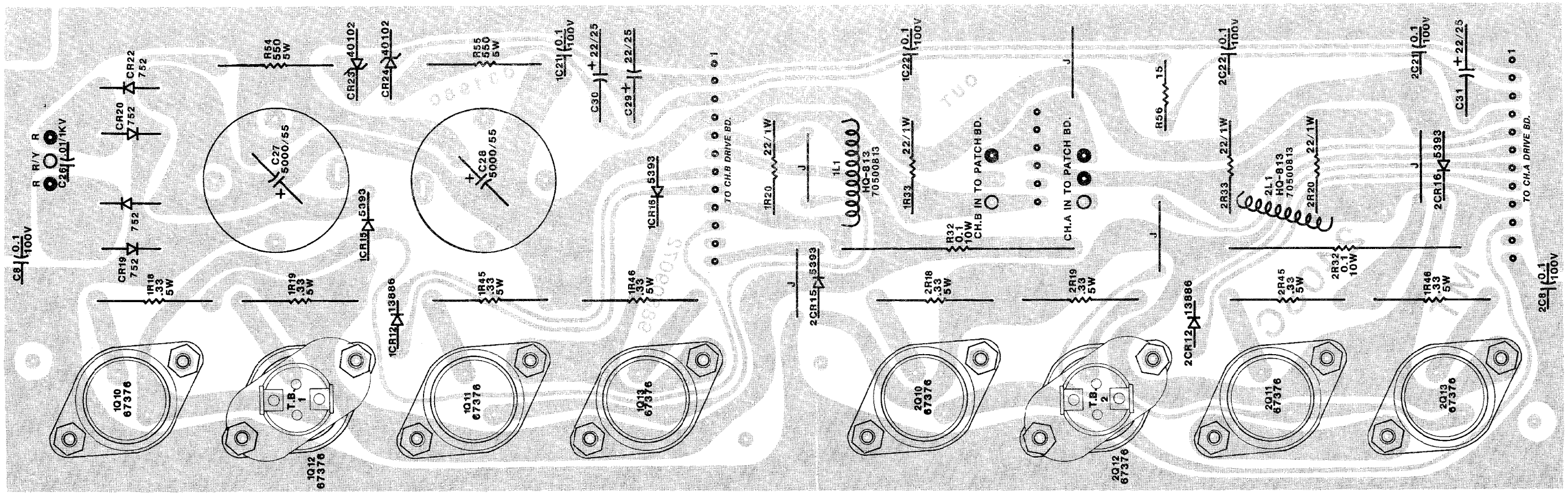

M-2600™ OUTPUT BD.
MK V™ SERIES

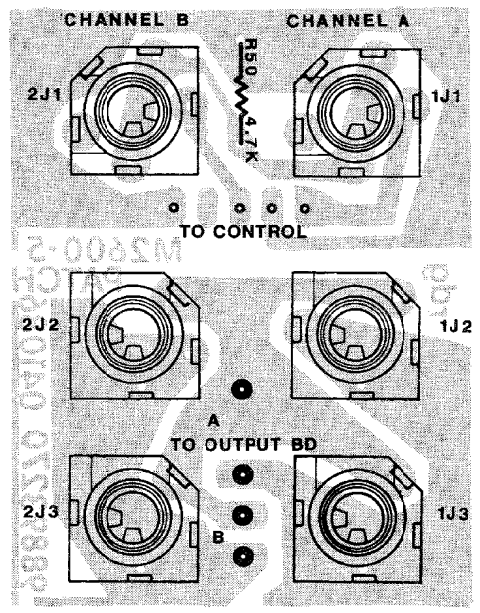

M-2600™ PATCH BD.
MK V™ SERIES

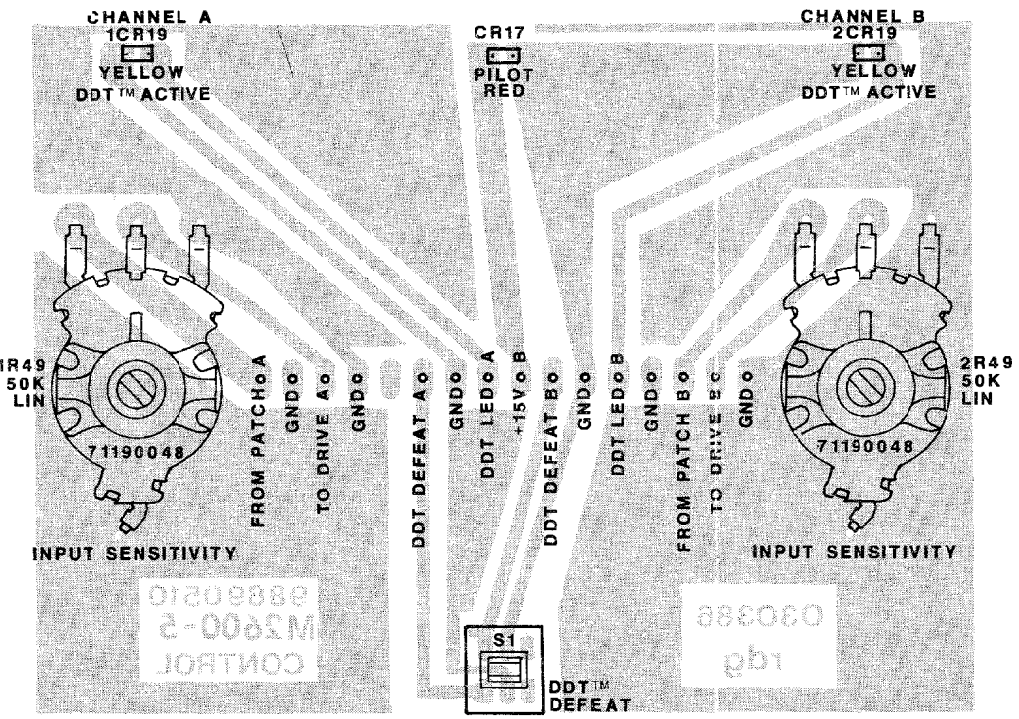

M-2600™ CONTROL BD.
MK V™ SERIES
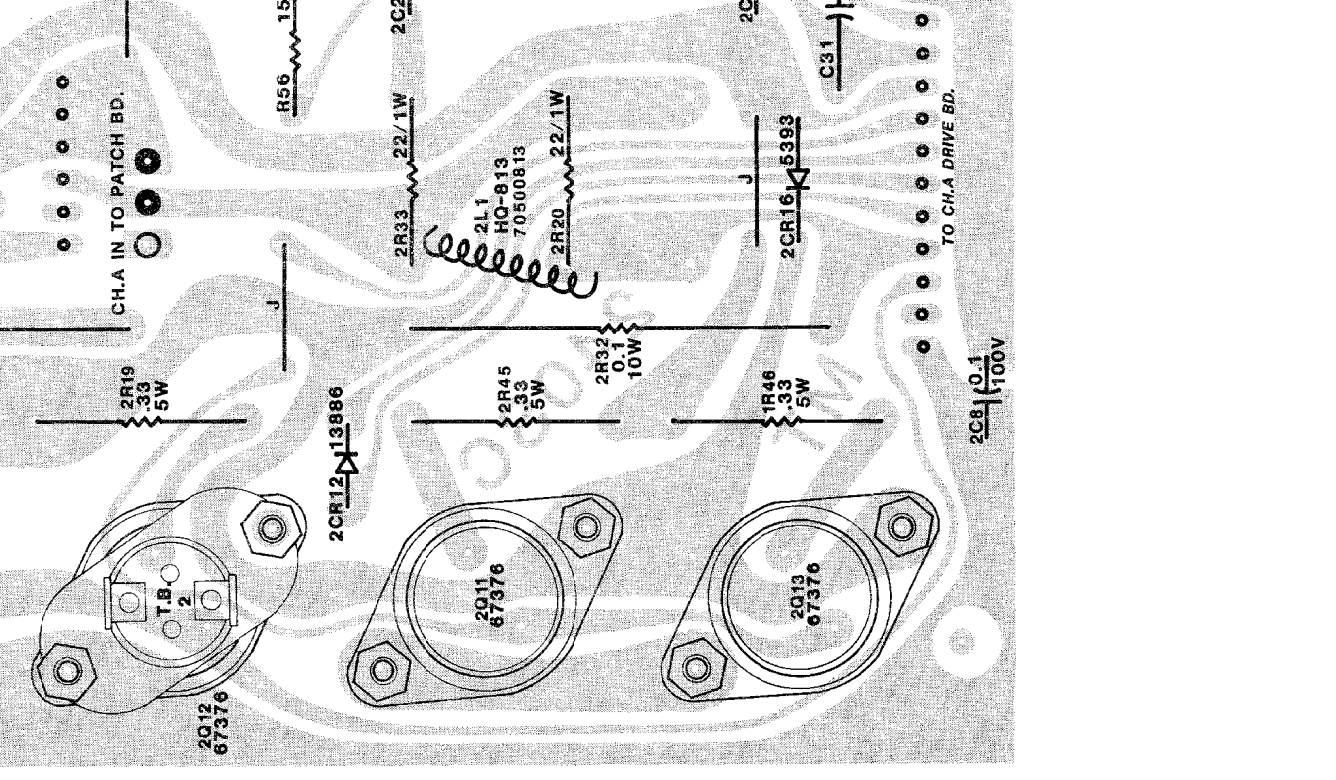
M-2600™ DRIVE BD.
MK V™ SERIES