M.P.I. CIRCUIT

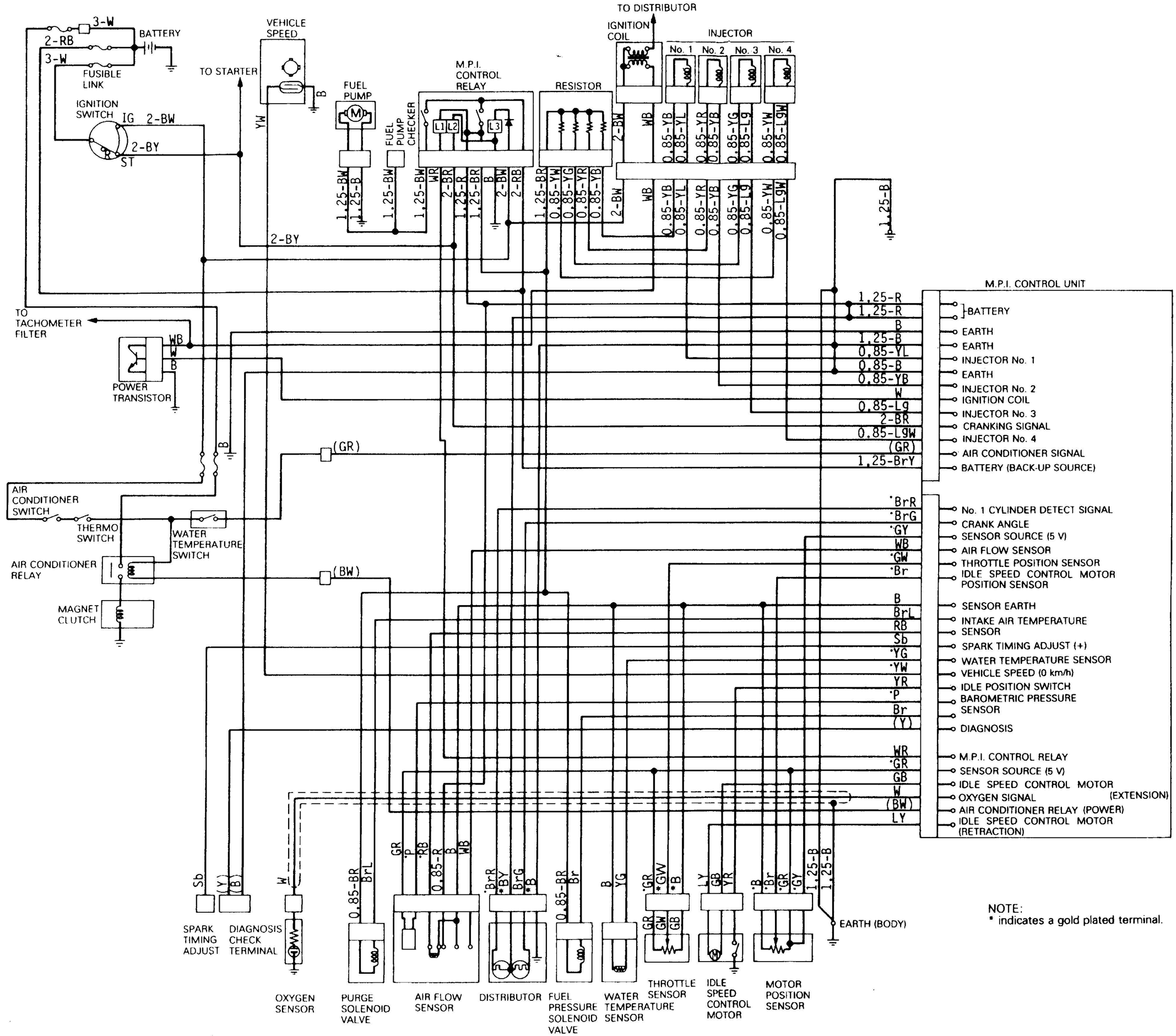

NOTE:
* indicates a gold plated terminal.