Errata

Title & Document Type: **182T Oscilloscope Operating and Service Manual**

Manual Part Number: **00182-90909**

Revision Date: **May 1976**

About this Manual

We've added this manual to the Agilent website in an effort to help you support your product. This manual provides the best information we could find. It may be incomplete or contain dated information, and the scan quality may not be ideal. If we find a better copy in the future, we will add it to the Agilent website.

HP References in this Manual

This manual may contain references to HP or Hewlett-Packard. Please note that Hewlett-Packard's former test and measurement, life sciences, and chemical analysis businesses are now part of Agilent Technologies. The HP XXXX referred to in this document is now the Agilent XXXX. For example, model number HP8648A is now model number Agilent 8648A. We have made no changes to this manual copy.

Support for Your Product

Agilent no longer sells or supports this product. You will find any other available product information on the Agilent Test & Measurement website:

www.agilent.com

Search for the model number of this product, and the resulting product page will guide you to any available information. Our service centers may be able to perform calibration if no repair parts are needed, but no other support from Agilent is available.

Agilent Technologies

OPERATING AND SERVICE MANUAL

182T
OSCILLOSCOPE

HEWLETT hp PACKARD

HP 182T

Model 182T

CERTIFICATION

Hewlett-Packard Company certifies that this instrument met its published specifications at the time of shipment from the factory. Hewlett-Packard Company further certifies that its calibration measurements are traceable to the United States National Bureau of Standards, to the extent allowed by the Bureau's calibration facility, and to the calibration facilities of other International Standards Organization members.

WARRANTY AND ASSISTANCE

This Hewlett-Packard product is warranted against defects in materials and workmanship for a period of one year from the date of shipment. Hewlett-Packard will, at its option, repair or replace products which prove to be defective during the warranty period provided they are returned to Hewlett-Packard, and provided the preventive maintenance procedures in this manual are followed. Repairs necessitated by misuse of the product are not covered by this warranty. NO OTHER WARRANTIES ARE EXPRESSED OR IMPLIED, INCLUDING, BUT NOT LIMITED TO, THE IMPLIED WARRANTIES OF MERCHANT-ABILITY AND FITNESS FOR A PARTICULAR PURPOSE. HEWLETT-PACKARD IS NOT LIABLE FOR CONSEQUENTIAL DAMAGES.

Service contracts or customer assistance agreements are available for Hewlett-Packard products.

For any assistance, contact your nearest Hewlett-Packard Sales and Service Office. Addresses are provided at the back of this manual.

OPERATING AND SERVICE MANUAL

MODEL 182T OSCILLOSCOPE (Including Option 003)

SERIAL NUMBERS

This manual applies directly to instruments with serial numbers prefixed 1529A.

With changes described in Section VII, this manual also applies to instruments with serial numbers prefixed 1507A and 1515A.

For additional important information about serial numbers, see Instrument Identification in Section I.

HEWLETT-PACKARD COMPANY/COLORADO SPRINGS DIVISION
1900 GARDEN OF THE GODS ROAD, COLORADO SPRINGS, COLORADO, U.S.A.

Manual Part Number 00182-90909
Microfiche Part Number 00182-90809

PRINTED: MAY 1976

SAFETY SUMMARY

The following general safety precautions must be observed during all phases of operation, service, and repair of this instrument. Failure to comply with these precautions or with specific warnings elsewhere in this manual violates safety standards of design, manufacture, and intended use of the instrument. Hewlett-Packard Company assumes no liability for the customer's failure to comply with these requirements.

GROUND THE INSTRUMENT.

To minimize shock hazard, the instrument chassis and cabinet must be connected to an electrical ground. The instrument is equipped with a three-conductor ac power cable. The power cable must either be plugged into an approved three-contact electrical outlet or used with a three-contact to two-contact adapter with the grounding wire (green) firmly connected to an electrical ground (safety ground) at the power outlet. The power jack and mating plug of the power cable meet International Electrotechnical Commission (IEC) safety standards.

DO NOT OPERATE IN AN EXPLOSIVE ATMOSPHERE.

Do not operate the instrument in the presence of flammable gases or fumes. Operation of any electrical instrument in such an environment constitutes a definite safety hazard.

KEEP AWAY FROM LIVE CIRCUITS.

Operating personnel must not remove instrument covers. Component replacement and internal adjustments must be made by qualified maintenance personnel. Do not replace components with power cable connected. Under certain conditions, dangerous voltages may exist even with the power cable removed. To avoid injuries, always disconnect power and discharge circuits before touching them.

DO NOT SERVICE OR ADJUST ALONE.

Do not attempt internal service or adjustment unless another person, capable of rendering first aid and resuscitation, is present.

USE CAUTION WHEN EXPOSING OR HANDLING THE CRT.

Breakage of the Cathode-ray Tube (CRT) causes a high-velocity scattering of glass fragments (implosion). To prevent CRT implosion, avoid rough handling or jarring of the instrument. Handling of the CRT shall be done only by qualified maintenance personnel using approved safety mask and gloves.

DO NOT SUBSTITUTE PARTS OR MODIFY INSTRUMENT.

Because of the danger of introducing additional hazards, do not install substitute parts or perform any unauthorized modification to the instrument. Return the instrument to a Hewlett-Packard Sales and Service Office for service and repair to ensure that safety features are maintained.

DANGEROUS PROCEDURE WARNINGS.

Warnings, such as the example below, precede potentially dangerous procedures throughout this manual. Instructions contained in the warnings must be followed.

WARNING

Dangerous voltages, capable of causing death, are present in this instrument. Use extreme caution when handling, testing, and adjusting.

TABLE OF CONTENTS

TABLE OF CONTENTS (Cont'd)

LIST OF ILLUSTRATIONS

LIST OF TABLES

SECTION I

GENERAL INFORMATION

1-1. INTRODUCTION.

1-2. This manual provides operating and servicing information for the Hewlett-Packard Model 182T Oscilloscope. The manual is divided into eight sections, each covering a specific topic or aspect of the instrument. All schematics are located at the rear of the manual.

1-3. This section contains instrument specifications (table 1-1), a description of features, warranty information, data for manual and instrument identification, and information regarding accessories available for the instrument. Table 1-2 describes the abbreviations used in this manual except for Section VI. The parts list contains a computer printout using computer supplied abbreviations.

1-4. DESCRIPTION.

1-5. The Model 182T is a solid-state, lightweight laboratory and general-purpose oscilloscope mainframe with plug-in capabilities. It is designed to display complex high-frequency waveforms and to measure alternating- and direct-current voltages. Complete specifications are given in table 1-1.

1-6. The Model 182T is a cabinet-type instrument with a built-in tilt stand, carrying handle on top, and feet mounted on both bottom and rear for either bench or upright operation.

1-7. Power consumption, with plug-ins is less than 120 watts at normal line voltage. The instrument is convection cooled and designed to operate within specifications at temperatures between 0°C and 55°C with up to 95% relative humidity at 40°C.

1-8. The instrument contains all power supplies, a dual-output calibrator, a horizontal amplifier, a gate amplifier, and the CRT. Operation at either 115- or 230-Vac is selectable by a switch located on the rear panel of the oscilloscope. Also located on the rear panel are recorder output connectors for use with spectrum analyzer plug-ins. These outputs are dependent upon the spectrum analyzer used and the appropriate plug-in Operating and Service Manual should be refered to.

NOTE

These outputs should not be used when a standard 1800-series plug-in is used.

1-9. The Model 182T is designed to operate with real-time, sampling and TDR, and frequency domain plug-ins.

1-10. A calibrator provides a square-wave signal of approximately 1 kHz with a rise time of less than 3 μs. The calibrator output is available at the front panel at amplitudes of 250 mV and 10 V p-p with an accuracy of ±1%. The signal may be used to check horizontal and vertical deflection factors and to compensate divider probes.

1-11. The oscilloscope horizontal amplifier accepts sweep signals from the time-base plug-in or an external signal. Bandwidth is dc to 5 MHz, dc-coupled, and 5 Hz to 5 MHz with capacitive coupling. Two deflection factor ranges are front panel selectable: 1 V/div (X1), and 0.1 V/div ±5% (X10). In addition, a vernier control provides continuous adjustment between ranges. The maximum external input level is 300 Vdc, ac-coupled, with a dynamic range of ±20 V.

1-12. A beam finder pushbutton control assists the operator in bringing a displaced beam on screen. Its use increases intensity and reduces vertical and horizontal amplifier gain to quickly locate trace position.

1-13. CATHODE-RAY TUBE.

1-14. The Model 182T uses a post-accelerator aluminized CRT with an 8- by 10-major division display area of 133 cm². Each division is 1.29 cm with 0.2-division subdivisions provided on the major axes. The internal graticule eliminates display parallax. The standard CRT supplied with this instrument has a P-39 aluminized phosphor.

1-15. WARRANTY.

1-16. This instrument is certified and warranted as stated on the inside front cover of this manual. The CRT is covered by a separate warranty. The CRT warranty and warranty claim form are located at the rear of this manual. Should the CRT fail within the time specified on the warranty, fill out the failure report form on the reverse side of the warranty statement and return it with the CRT in accordance with the shipping instructions. In all correspondence with a Hewlett-Packard Sales/Service Office concerning an instrument, reference the complete serial number and Model of the instrument.

CAUTION

The warranty may be void for instruments having a missing or mutilated serial number tag.

Table 1-1. Specifications

CATHODE-RAY TUBE AND CONTROLS

TYPE: post-accelerator, 21-kV accelerating potential; aluminized P-39 phosphor.
Graticule: 8- x 10-div graticule; 0.2-div subdiv on major axes; 1 div = 1.29 cm. Front-panel recessed screwdriver adjustment aligns trace with graticule. Scale control illuminates graticule for viewing with hood or taking photographs.

BEAM FINDER: returns trace to CRT screen regardless of setting of horizontal, vertical, or intensity controls.

INTENSITY MODULATION (Z-AXIS INPUT): approx +2 V, >50 ns pulse width (< 10-MHz sine wave) will blank trace of normal intensity. Input R, approx 5k ohms. Maximum input voltage, ±20 V (dc + pk ac).

CALIBRATOR

TYPE: approx 1-kHz square wave, <3 μs rise time.

VOLTAGE: two outputs, 250-mV p-p and 10 V p-p into >1 megohm; accuracy, ±1%.

HORIZONTAL AMPLIFIER

EXTERNAL INPUT:
Bandwidth: dc-coupled, dc to 5 MHz; ac-coupled, 5 Hz to 5 MHz.
Deflection Factor: X1, 1 V/div; X10, 0.1 V/div. Vernier provides continuous adjustment between ranges. Accuracy, ±5%.
Dynamic Range: ±20 V.
Maximum Input: ±300 V (dc + pk ac).
Input RC: 1 megohm shunted by approx 30 pF.

INTERNAL SWEEP:
Sweep Magnifier: X10; accuracy ±5%.

OUTPUTS

four rear-panel BNC connectors provide recorder outputs for use with spectrum analyzer plug-ins.

GENERAL

WEIGHT: (without plug-ins) net, 26-1/2 lb (12.02 kg); shipping, 38-1/2 lb (17.46 kg).

DIMENSIONS: see outline drawing.

ENVIRONMENT:
Temperature: 0°C to 55°C.
Humidity: up to 95% relative humidity at 40°C.
Altitude: up to 15 000 ft (4.6 km).
Vibration: vibrated in three planes for 15 minutes each with 0.010-inch excursion, 10 to 55 Hz.

POWER: 115 V or 230 V ±10%, 48 to 440 Hz. Approx 120 watts with plug-ins at normal line voltage, 200 VA max.

ACCESSORIES FURNISHED: blue plastic light filter, 115 volt power cord, altermate 230 volt fuse package.

OPTIONS: refer to Section VII for listing of options.

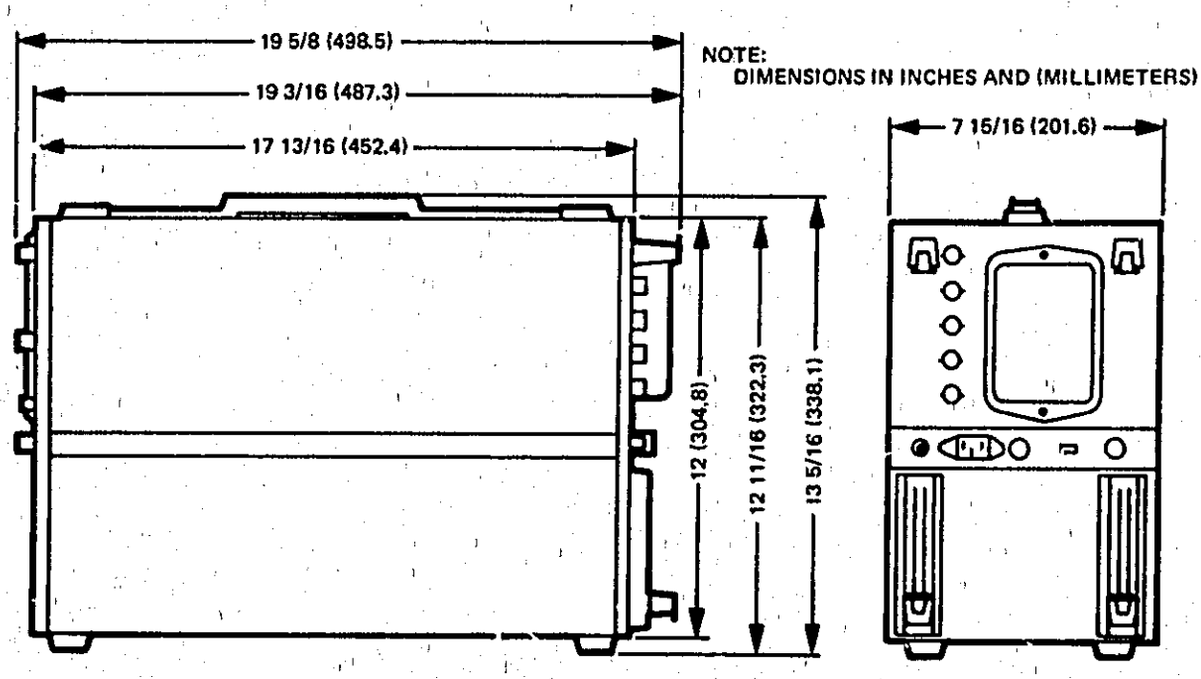

Table 1-2. Reference Designations and Abbreviations

REFERENCE DESIGNATIONS

A	ASSEMBLY	E	MISC. ELECTRICAL PART	P	PLUG	U	INTEGRATED CIRCUIT (UNREPAIRABLE)
AT	ATTENUATOR RESISTIVE TERMINATION	F	FUSE	PS	POWER SUPPLY	V	VACUUM TUBE, NEON BULB, PHOTOCELL, ETC.
B	MOTOR, FAN	FL	FILTER	Q	TRANSISTOR	VR	VOLTAGE REGULATOR (DIODE)
BT	BATTERY	H	HARDWARE	R	RESISTOR	W	CABLE
C	CAPACITOR	J	JACK	RT	THERMISTOR	X	SOCKET
CP	COUPLING	K	RELAY	S	SWITCH	Y	CRYSTAL
CR	DIODE	L	INDUCTOR	T	TRANSFORMER	Z	NETWORK
DL	DELAY LINE	LS	SPEAKER	TB	TERMINAL BOARD		
DS	DEVICE SIGNALING (LAMP)	M	METER	TP	TEST POINT		
		MP	MECHANICAL PART				

ABBREVIATIONS

A	AMPERE(S)	F	FARAD(S)	n	NANO (10^{-9})	rfi	RADIO FREQUENCY INTERFERENCE
At	AMPERE TURN(S)	FET	FIELD EFFECT TRANSISTOR(S)	nc	NORMALLY CLOSED	rms	ROOT MEAN SQUARE
ampl	AMPLIFIER(S)	G	GIGA (10^{9})	no.	NORMALLY OPEN	rwv	REVERSE WORKING VOLTAGE
assy	ASSEMBLY	gnd	GROUND(ED)	npn	NEGATIVE-POSITIVE-NEGATIVE	SCR	SILICON CONTROLLED RECTIFIER
ampltd	AMPLITUDE			ns	NANOSECOND	s	SECOND(S)
bd	BOARD(S)	H	HENRY(IES)	p	PICO (10^{-12})	std	STANDARD
bp	BANDPASS	hr	HOUR(S)	pc	PRINTED (ETCHED) CIRCUIT(S)	trmr	TRIMMER
c	CENTI (10^{-2})	HP	HEWLETT-PACKARD	pk	PEAK	μ	MICRO (10^{-6})
ccw	COUNTERCLOCKWISE	Hz	HERTZ	pnp	POSITIVE-NEGATIVE-POSITIVE	μs	MICROSECOND
coax.	COAXIAL	if.	INTERMEDIATE FREQ.	p/o	PART OF	V	VOLTS
coef	COEFFICIENT	intl	INTERNAL	p-p	PEAK-TO-PEAK	var	VARIABLE
com	COMMON	k	KILO (10^{3})	prgm	PROGRAM	w/	WITH
CRT	CATHODE-RAY TUBE	lpf	LOW-PASS FILTER(S)	prv	PEAK INVERSE VOLTAGE(S)	w/o	WITHOUT
cw	CLOCKWISE	m	MILLI (10^{-3})	ps	PICOSECOND	wiv	WORKING INVERSE VOLTAGE
d	DECI (10^{-1})	M	MEGA (10^{6})	pwv	PEAK WORKING VOLTAGE		
dB	DECIBEL	ms	MILLISECOND	rf	RADIO FREQUENCY		
ext	EXTERNAL						

1-17. INSTRUMENT IDENTIFICATION.

1-18. Hewlett-Packard uses a two-section serial number for instrument identification (figure 1-1). The first numerical group is the serial prefix number. It identifies a series of instruments. The last numerical group identifies a particular instrument in the series. The serial number appears on a plate located on the rear panel.

1-19. MANUAL IDENTIFICATION AND CHANGES.

1-20. This manual applies directly to Model 182T instruments with a serial prefix as indicated on the title page. If the serial prefix of your instrument is different from that on the title page of this manual, refer to Section VII for instructions to adapt this manual for proper instrument coverage.

1-21. ACCESSORIES FURNISHED.

1-22. The Model 182T is equipped with a blue plastic light filter which provides improved viewing and greater contrast under ambient light conditions. The filter slides into place in the CRT bezel and may be removed if preferred.

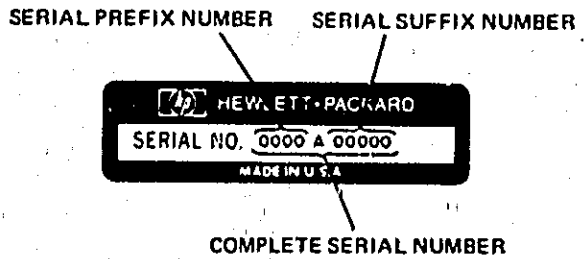

Figure 1-1. Instrument Identification

1-23. A detachable power cord is supplied with each instrument. The three-conductor power cord and instrument receptacle conform to International Electrotechnical Commission (IEC) safety standards and provides an earth ground connection of the metal enclosure for operator safety. Also included is a 230 V fuse package.

1-24. AVAILABLE ACCESSORIES.

1-25. A series of mobile test stands is available for the Model 182T. The Model 1001B is a portable testmobile which is table top height and has an adjustable tilt mount. The Model 1002B testmobile is a general-purpose test stand similar to Model 1001B except contains a central storage unit.

1-26. Waveform photography of the Model 182T display can be accomplished with the Model 10367A Camera Adapter. The adapter fits into the Model 182T bezel, replacing the light filter, and may be used with the Model 197A Oscilloscope Camera.

1-27. For ease of calibration and maintenance, the HP Model 10407B Plug-in Extender can be obtained. It provides for removal of the plug-ins from the oscilloscope mainframe and exposes components and adjustments of the plug-ins for servicing.

1-28. A metallic mesh contrast filter which functions as an RFI shield is available for the Model 182T. The mesh filter, HP Part No. 00182-62701, is directly interchangable with the standard blue plastic filter. When installed, the metallic mesh filter is electrically grounded to the oscilloscope chassis, thereby furnishing RFI shielding.

1-29. Cameras, probes, viewing hoods, terminations, and other accessory items are available for specialized requirements. Information on these and the above described accessories may be obtained from HP Sales/Service Offices listed in the rear of this manual.

1-30. INQUIRIES.

1-31. Refer any questions regarding the manual, the Manual Changes sheet, or the instrument to the nearest HP Sales/Service Office. Always identify the instrument by model number, complete name, and complete serial number in all correspondence. Refer to the inside rear cover of this manual for a worldwide listing of HP Sales/Service Offices.

SECTION II

INSTALLATION

2-1. INTRODUCTION.

2-2. This section contains instruction for performing an initial inspection of the Model 182T. Installation procedures and precautions are presented in step-by-step order. The procedures for making claim for warranty repairs and for repacking the instrument for shipment are also described in this section.

WARNING

Read the Safety Summary at the front of this manual before installing or operating the instrument.

2-3. INITIAL INSPECTION.

2-4. The instrument was carefully inspected, mechanically and electrically, prior to shipment. On receipt, inspect it for any mechanical damage which may have occurred during shipment.

2-5. Check for physical damage such as bent or broken parts and dents or scratches. If damage is found, refer to the claims paragraph in this section. Retain the packaging material for reshipment of the instrument.

2-6. Check the electrical performance of the instrument as soon as possible after receipt. The performance check is contained in Section V of this manual. This check will verify that the instrument is operating within the specifications listed in table 1-1. Initial performance and accuracy of the instrument are certified as state in the front of this manual.

2-7. CLAIMS.

2-8. If physical damage is found, notify the carrier and the nearest Hewlett-Packard Sales/Service Office immediately. The Hewlett-Packard Sales/Service Office will arrange for repair or replacement of the instrument without waiting for a claim to be settled with the carrier.

2-9. The warranty statement applicable to this instrument is on the inside front cover of this manual. The CRT warranty and claims form is located at the rear of this manual.

2-10. REPACKING FOR SHIPMENT.

2-11. If the instrument is to be shipped to a Hewlett-Packard Sales/Service Office, attach a tag to it showing owner's name and address, instrument model number, and serial number, and a description of service required.

2-12. Use the original shipping carton and packaging materials for reshipment. If they are not available, the Hewlett-Packard Sales/Service Office will provide information and recommendations on materials to be used. Shipping material normally includes the following:

a. A double-walled carton (refer to table 2-1 for test strength required).

b. Heavy paper or sheets of cardboard to protect all instrument surfaces. Use a nonabrasive material such as polyurethane or a cushioned paper such as Kimpak around all projecting parts.

c. At least 4 inches of tightly packed, industry-approved, shock-absorbing material such as extra-firm polyurethane foam.

d. Heavy-duty shipping tape to secure outside of carton.

Table 2-1. Shipping Carton Test Strength

Gross Weight (lb)	Carton Test Strength (lb)
up to 10	200
10 to 30	275
30 to 120	350
120 to 140	500
140 to 160	600

2-13. PREPARATION FOR USE.

2-14. POWER REQUIREMENTS. The standard Model 182T requires a 115- or 230-Vac ±10%, single-phase, 48 to 440 Hz power source capable of supplying 200 VA maximum. It requires approximately 120 watts at normal line voltage with the plug-ins installed.

2-15. This instrument, as shipped, is ready for operation on 115 Vac. Before applying power, check the rear-panel slide switch, labeled SELECTOR, for proper position. Position it so that the legend 115 is visible.

2-16. If the instrument is to be operated from a 230 Vac power source, proceed as follows:

a. Remove the 115V power cord and line fuse.

b. Using a small screwdriver, set the rear-panel "SELECTOR" slide switch so that the legend 230 is visible.

c. Install the correct value 230V line fuse as indicated on the rear panel near the fuseholder.

d. Connect the correct 230V power cord.

2-17. For protection from shock hazard, the instrument is provided with a detachable three-conductor power cord which, when plugged into an appropriate outlet, grounds the instrument. The oscilloscope mainframe power jack and the mating plug of the power cord conform to International Electrotechnical Commission (IEC) safety standards.

2-18. When operating the Model 182T from a two-contact power outlet, use a three-conductor to two-conductor adapter. Preserve the safety feature by grounding the adapter flexible (green) lead to an earth (safety) ground connection. A suitable three- to two-pin adapter is available from Hewlett-Packard. Order Hewlett-Packard Part No. 1251-0048. Do not operate the instrument without the ground connection firmly attached.

2-19. INSTRUMENT MOUNTING. The Model 182T is intended for bench use. It has a built-in tilt stand and feet mounted on both bottom and rear for bench or upright operation.

2-20. To use the tilt stand, lift the front of the instrument or place it vertically on the rear feet. The tilt stand is folded and locked into place against the cabinet bottom cover. Hold the instrument steady and squeeze the two tilt stand legs together to release them from the lock. Pull the stand toward the front of the instrument. When fully forward, release the legs and they will lock into position. The tilt stand will support the instrument with the front elevated.

2-21. INSTRUMENT COOLING. This instrument does not require forced-air cooling when operated at room temperature or between 0 to +55°C. Normal air circulation will maintain a reasonable operating temperature within the instrument.

2-22. Perforations in the two covers provide for the required airflow. Do not obstruct them. Provide several inches of clearance around the top, rear, and sides. Adequate airflow from the bottom of the instrument is provided by the mounting feet.

2-23. CONTRAST FILTER.

2-24. The contrast filter is designed to be easily removed from the CRT bezel. Use of the light blue contrast filter provides comfortable viewing when the instrument is operated in normal and high ambient light.

2-25. To remove the contrast filter, grasp the top portion of the bezel frame and pull straight up. Remove the filter by lifting it straight up and out of the bezel. Figure 2-1 shows the filter being removed from the instrument.

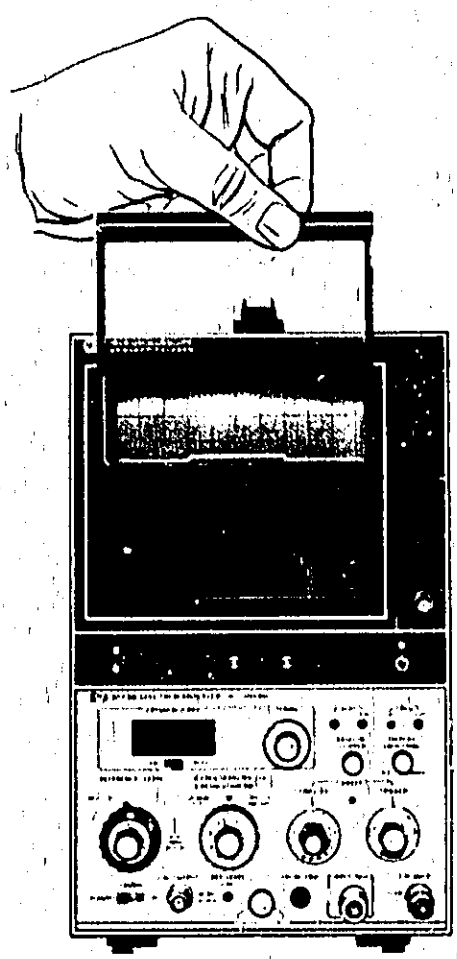

182T-101

Figure 2-1. Contrast Filter Removal

2-26. CLEANING CRT FACEPLATE.

2-27. When the contrast filter has been removed, the CRT faceplate can be cleaned using a soft cloth or tissue. Never use coarse or abrasive tissues; these will scratch the plastic CRT faceplate.

2-28. INSTRUMENT COMPATIBILITY.

2-29. The Model 182T Oscilloscope is designed to operate with HP Model 8558B or HP Model 8755A spectrum analyzers.

SECTION III

OPERATION

3-1. INTRODUCTION.

3-2. This section provides general information on the operation, function, and application of the instrument controls. Front- and rear-panel controls and connectors are identified and briefly described in figure 3-1.

3-3. GENERAL. The Model 182T is designed to operate with real time, sampling and TDR, and frequency domain plug-ins. These plug-ins are accommodated in the lower portion of the instrument. The required operating power is obtained from the oscilloscope mainframe. Refer to the plug-in Operating and Service Manual for mating and installation instructions.

3-4. PUSHBUTTON SWITCHES. These switches are two position pushbutton type. They are: MAGNIFIER, DISPLAY, and EXT COUPLING. The pushbuttons for these functions are color coded to indicate the function selected. When the released position is selected, the white skirt of the pushbutton is exposed. This corresponds to the control function on the panel outlined in white. For example: if MAGNIFIER is pressed, only the black portion of the pushbutton is visible. Magnification is therefore X10. When MAGNIFIER is released, the white skirt of the pushbutton can be seen and magnification is X1.

3-5. FRONT-PANEL CONTROLS AND CONNECTOR.

3-6. All operating controls and front-panel adjustments are identified and described in figure 3-1. The following paragraphs explain the function of some of the controls and connectors in detail.

3-7. CALIBRATOR. The calibrator has two outputs, 10 V and 250 mV peak-to-peak, negative-going from ground, with an amplitude accuracy of ±1%. The output is square wave at a frequency of approximately 1 kHz. Rise time of the signal is less than 3 microseconds. These outputs are useful for checking vertical and horizontal sensitivity calibration, and divider probe calibration. A 3-way binding post provides a ground connection point and may be used with banana plug, wire, or spade lug connection.

3-8. SCALE. This control adjusts the overall brightness of the CRT graticule. It should be adjusted for good contrast between the background and the graticule. The SCALE control is useful when using a hood to view the display or when photographing waveforms. Rotate the SCALE control counterclockwise to OFF when graticule illumination is not needed.

3-9. TRACE ALIGN. This screwdriver adjustment compensates for external magnetic fields that may affect alignment of the horizontal trace with the graticule. Use it to position the trace parallel to the graticule horizontal lines. The alignment should be checked when the instrument is moved to a new location and adjustment made whenever necessary.

3-10. FOCUS AND ASTIG. These controls are used to obtain a display of uniform focus. Adjust both controls for the sharpest display possible.

3-11. FIND BEAM. Occasionally the CRT beam may be driven off-screen by large dc input levels or improper control settings. Pressing the pushbutton increases intensity and reduces horizontal and vertical amplifier gains enough to always return a displaced beam to the viewing area. This enables the operator to determine the action necessary to center the display. All operating controls function while the FIND BEAM control is pressed. For example, obtaining a centered display may require adjustment of the deflection factor, horizontal and vertical position, coupling, trigger level, or intensity. If the controls are properly set, the display will remain visible when FIND BEAM is released.

3-12. LINE. This toggle switch applies or removes ac line input power to the instrument. When ON, an indicator lamp, located immediately above the switch, is illuminated. Power for the lamp is obtained from the low-voltage power supply. Both sides of the ac power line input are interrupted when switched to OFF.

3-13. COUPLING. The EXT COUPLING switch is used to select ac coupling (capacitive coupling) to the amplifier for alternating voltages or dc coupling.

3-14. HORIZONTAL MAGNIFIER. This pushbutton switch controls the gain of the horizontal amplifier. When switched from X1 to X10, the gain is increased ten times. For example, one volt into the horizontal amplifier EXT INPUT jack produces 1 division of deflection in X1 and 10 divisions of deflection in X10.

3-15. HORIZONTAL DISPLAY. Either of two modes of operation can be selected with this switch. It selects the origin of the input signal applied to the horizontal amplifier. When INT is selected, the input signal to the horizontal amplifier is obtained from the plug-in. With the switch in EXT, the sweep signal input from

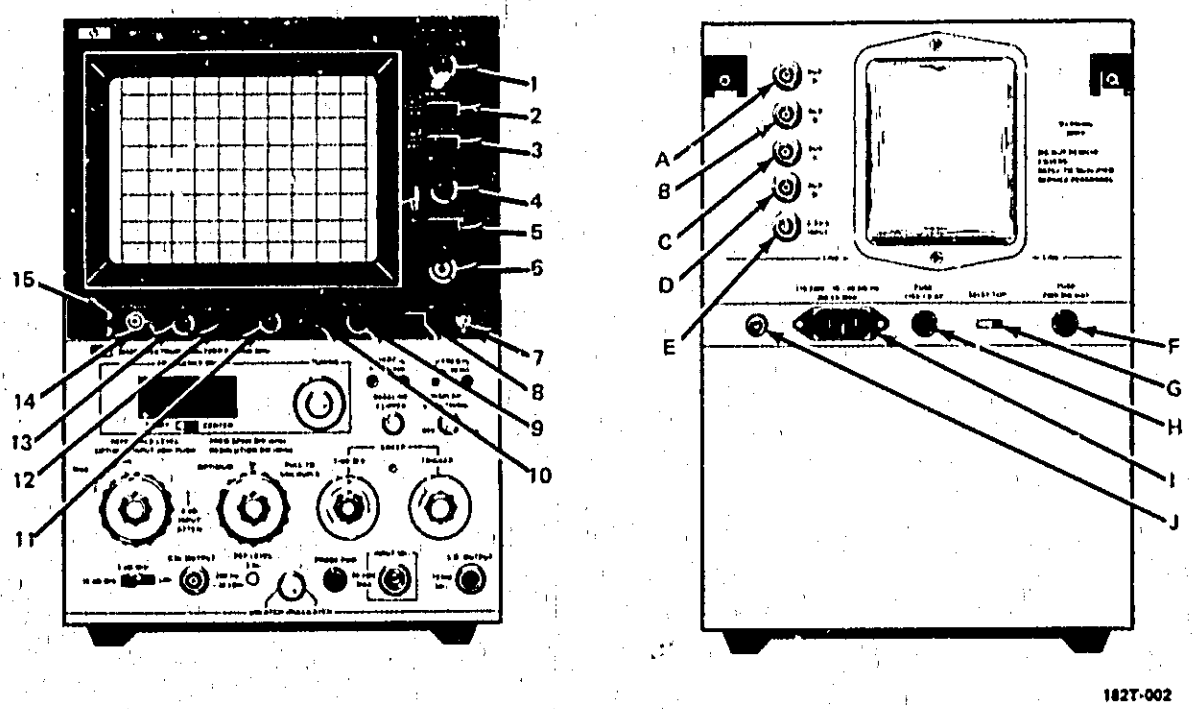

1. POSITION. Single knob provides coarse and fine adjustment of display's horizontal operation.

2. MAGNIFIER. Determines gain of horizontal amplifier.

3. DISPLAY. Selects source of horizontal input signal.

4. EXT VERNIER. Provides continuous adjustment of deflection factor for external horizontal input signals. In CAL detent position, deflection factor is selected by MAGNIFIER switch position.

5. EXT COUPLING. Selects AC or DC coupling for external horizontal input signal.

6. EXT INPUT. BNC connector for coupling an external horizontal input signal to horizontal amplifier.

7. LINE. Toggle switch with indicator light for turning oscilloscope on and off.

8. FIND BEAM. Intensifies trace and always returns display to on-screen.

9. INTENSITY. Controls brightness of display.

10. ASTIG. Adjusts roundness of writing beam.

11. FOCUS. Adjusts writing beam for sharpest trace.

12. TRACE ALIGN. Rotates trace around longitudinal axis of CRT.

13. SCALE. Controls graticule illumination.

14. Ground Connector. Provides a chassis ground connection point.

15. CALIBRATOR. Provides a 1-kHz square wave at two amplitudes: 250 mV and 10 V p-p.

A. AUX A. BNC connector for recorder output.

B. AUX B. BNC connector for recorder output.

C. AUX C. BNC connector for recorder output.

D. AUX D. BNC connector for recorder output.

E. Z-AXIS INPUT. BNC connector for input of CRT intensification or blanking signal.

F. FUSE. 230 V operation ac line fuse.

G. SELECTOR. Provides for external selection of line operating voltage.

H. FUSE. 115 V operation ac line fuse.

I. Power Connector. 3-wire ac power line input.

J. Ground Connector. Provides a chassis ground connection point.

Figure 3-1. Front- and Rear-panel Controls and Connectors

the plug-in is disconnected and input to the horizontal amplifier is obtained from the EXT INPUT connector located on the front panel.

3-16. EXT VERNIER. The deflection factor of an external input signal can be continuously varied to decrease deflection by a factor of approximately 10 by using this control. When the vernier is in the maximum clockwise position (CAL detent), the horizontal amplifier is calibrated to provide 1.0 V/div deflection in the X1 magnifier range and 0.1 V/div in the X10 range.

3-17. REAR-PANEL CONTROLS AND CONNECTORS.

3-18. Rear-panel controls and connectors are identified and described in figure 3-1. Additional information regarding the function of the controls is explained below.

3-19. OUTPUTS. Four BNC connectors on the rear panel are provided to supply recorder signals from the spectrum analyzer.

3-20. Z-AXIS INPUT. An external signal can be utilized to control the CRT intensity. The intensity modulation signal is applied directly to the CRT intensity gate amplifier. A pulse of approximately +2 V amplitude and a width of at least 50 nanoseconds or a +2 V continuous wave (cw) input of 10 MHz or lower will blank a trace of normal intensity. Input of a negative signal can be used for display intensification.

3-21. AC LINE INPUT. A three-conductor ac power cord is provided for ac input. A power line ground is obtained through the power cord. Also located on the rear panel is the SELECTOR line slide switch, which allows operation from either 115 V or 230 V ac power line. Fuses are provided for both 115 V and 230 V operation.

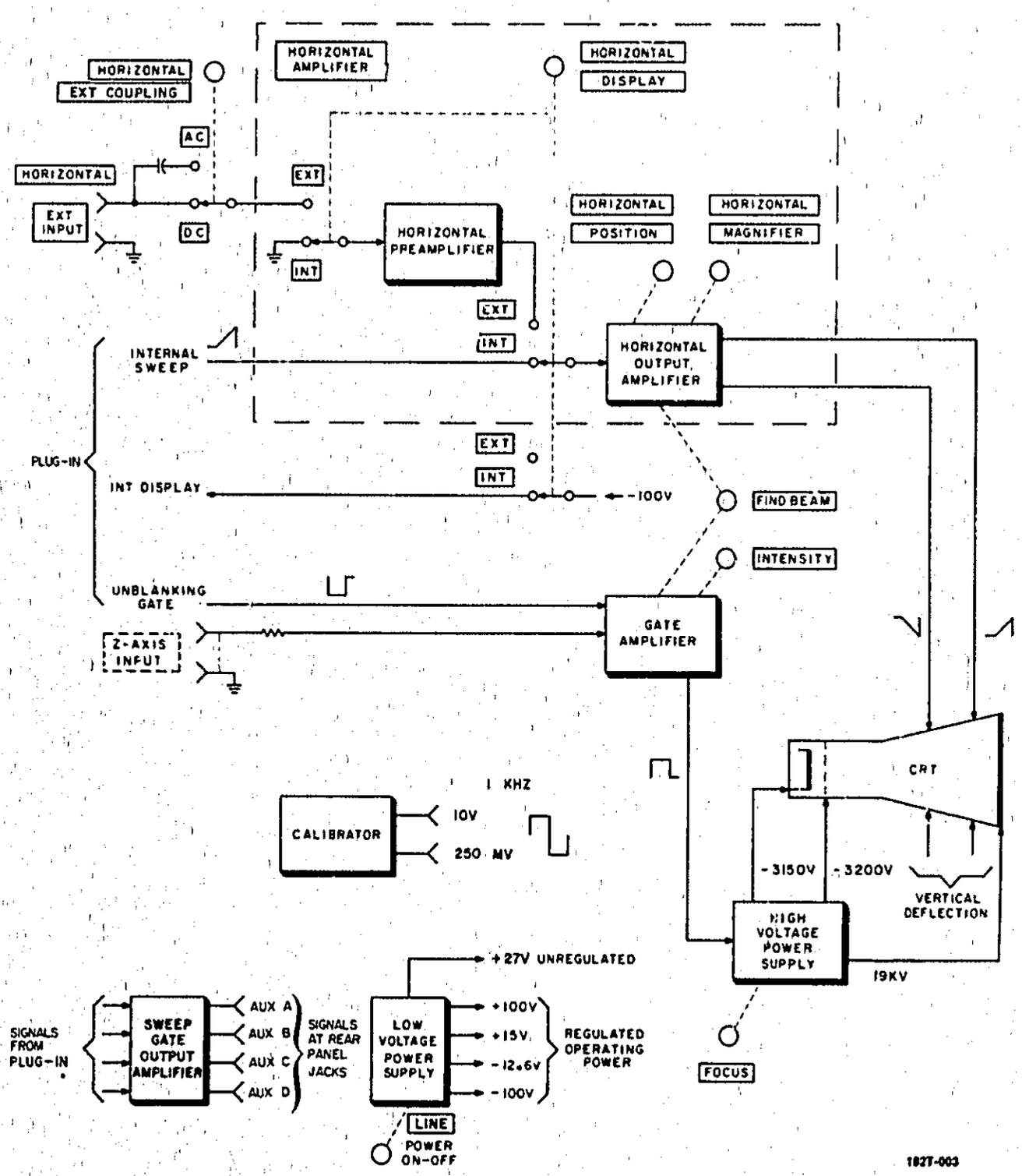

Figure 4-1. Overall Block Diagram

SECTION IV

PRINCIPLES OF OPERATION

4-1. INTRODUCTION.

4-2. This section provides circuit theory analysis of the Model 182T oscilloscope. Refer to the overall block diagram (figure 4-1) and the schematics in Section VIII.

4-3. GENERAL DESCRIPTION.

4-4. The Model 182T is an X-Y axis display instrument designed for use with real time, sample and TDR, and spectrum analyzer plug-ins. The instrument contains the CRT and its controls, low voltage and high voltage regulated power supplies, a horizontal amplifier, and a gate amplifier.

4-5. To obtain a useful display on the CRT, three signals are necessary: vertical deflection, horizontal deflection, and intensity. The signal required for vertical deflection (Y-axis) of the CRT is supplied by the plug-ins. This signal is connected directly to the CRT vertical deflection plates. The horizontal (X-axis) deflection signal is also generated by the plug-ins. It is further amplified by the oscilloscope horizontal amplifier before being applied to the CRT horizontal deflection plates.

4-6. An unblanking gate signal, synchronized to the start of the horizontal sweep, is developed in the plug-ins and amplified by the gate amplifier. The signal from the CRT control grid, unblanking the viewing area of the CRT.

4-7. Signals for horizontal deflection and intensity modulation can also be applied to the oscilloscope from an external source other than the plug-ins. External input jacks are provided for this purpose.

4-8. INPUT POWER. With power applied to the power transformer primary windings, several secondary voltages are produced. They are rectified, filtered and regulated, as required, and used as the dc source of power for the various circuits of the oscilloscope and for operation of the plug-ins.

4-9. HORIZONTAL DEFLECTION. The horizontal amplifier may be used with either internal or external signal sources. Positioning the HORIZONTAL DISPLAY switch to INT arranges the circuitry to operate from signals supplied from the plug-in. In this condition, —100 V is applied to the plug-in, allowing it to operate and produce both a sweep signal and an unblanking gate signal.

4-10. The sweep signal from the plug-in is coupled to the oscilloscope horizontal output amplifier where it is converted to a differential signal, amplified, and applied to the CRT horizontal deflection plates.

4-11. Horizontal position of the X-axis sweep signal is controlled at the input stage of the horizontal output amplifier. A two section potentiometer, mechanically interconnected, is used to provide both fine and coarse positioning controls from a single knob.

4-12. Horizontal amplifier gain is controlled by the MAGNIFIER switch. Two settings can be selected: X1 or X10. With X1 selected, the sweep speed corresponds to the selected plug-in sweep speed. In X10 operation the sweep speed is ten times that selected at the time base plug-in.

4-13. The unblanking gate signal from the plug-in is coupled to the gate amplifier where it is summed with the current from the INTENSITY control. The resulting signal is amplified and coupled through the high voltage supply to the CRT control grid to set the intensity of the displayed signals.

4-14. An externally applied signal for horizontal deflection may be connected to the EXT INPUT jack. The EXT VERNIER controls the externally applied signal and provides a variable gain adjustment for setting the X-axis display size. The EXT COUPLING switch provides for either direct (DC) or capacitive (AC) coupling of the external input signal. The external signal is coupled to a pre-amplifier, differentially amplified by the output amplifier, and applied to the CRT for horizontal deflection. Positioning and horizontal gain controls also function with external input signals.

4-15. CIRCUIT DETAILS.

4-16. INPUT AC POWER. Input line power is supplied by a detachable three conductor power cord. This cord has a standard plug for wall outlet connection providing an electrical ground. Both sides of the line power are filtered immediately at the power input connector.

4-17. The line power transformer has two primary windings. SELECTOR switch A4S1 connects these windings in parallel for 115 V operation and in series for 230 V operation. When set for use with a 115 V source of line power, fuse A4F1 protects against excessive input current. When operated on 230 V line power, fuse A4F2 is also placed in the primary power circuit. With the front panel LINE toggle switch, A2S1, in the

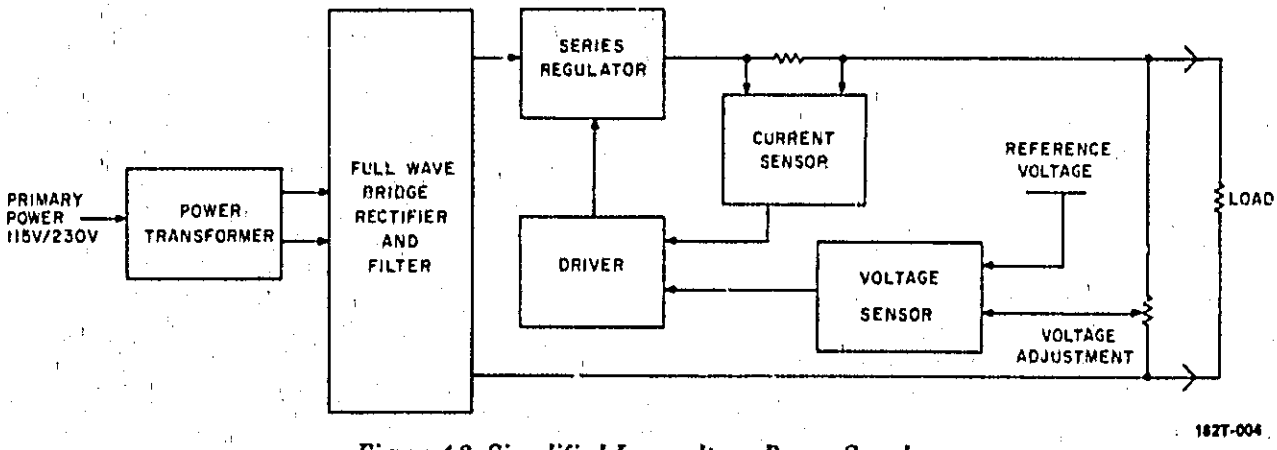

Figure 4-2. Simplified Low-voltage Power Supply

ON position, power is applied to the low-voltage power supply transformer and LINE lamp A2DS1 lights.

4-18. LOW-VOLTAGE POWER SUPPLY. The low-voltage power supply produces four regulated voltages for use throughout the oscilloscope and the plug-ins: +100 V, —100 V, +15 V and —12.6 V. Each supply is referenced to the +100 V supply for regulation purposes with the +100 V supply referenced to a 9-volt temperature-compensated zener diode A1A2VR2. The +100 V and —100 V supplies are also foldback current limited, providing short-circuit protection.

4-19. A simplified block diagram of a typical low-voltage power supply is shown in figure 4-2. Unregulated alternating power is supplied by the transformer, bridge rectified, and filtered. Changes in output voltage caused by input voltage variation or load changes are detected by the voltage sensor. Compared against a voltage reference, changes in output voltage are detected and applied as feedback to the driver, which controls the series regulator. The series regulator acts as a variable resistance and operates to increase its series resistance if the output voltage is high or decreases resistance when the output voltage is low. The action of the series regulator is to maintain output voltage at a constant level.

4-20. Current sensing takes place simultaneously with voltage sensing. If the load current increases above a certain level, the current sensor detects the increase as a voltage drop across the series resistor. This increased voltage drop causes the driver to bias the series regulator off.

4-21. The +100 V supply is used throughout the LVPS as a reference for the other supplies. It is both voltage and current regulated. Refer to the LVPS schematic while reading the following explanation.

4-22. One of the secondary outputs of A1T1 is coupled to a full-wave bridge rectifier consisting of A1A1 CR5-CR8. The rectified voltage is filtered by A1C1, and applied through fuse A1F1 to the regulator assembly. Fusing protects the rectifiers and transformer if a regulator malfunction results in excessive current flow. The regulator supplies sufficient current to the load to keep the output voltage at a constant +100 volts. Series regulator A1Q1 controls load current in order to maintain the output voltage at +100 V. Variations in output voltage due to changes in load or input line voltage are sensed by differential comparator A1A2Q3 and Q4. If the output of the +100 V supply changes, the full amount of the voltage change is applied to A1A2Q3 by A1A2VR2 while A1A2Q4 senses only a small part of the change in output voltage. The +100 V adjustment potentiometer A1A2R11 set the operating point of A1A2Q4. The output of the differential comparator is coupled to driver A1A2Q1, amplified, and used to control series regulator A1Q1.

4-23. A current limiting function is also part of the +100 V supply operation. All current furnished by the supply flows through A1A2R4. As the current requirements increase to the limit of the supply capability, the voltage drop across A1A2R4 causes A1A2Q2 to conduct. Since the collector of A1A2Q2 and the output of differential comparator A1A2Q3/Q4 are coupled to drive A1A2Q1, the amount of current flowing as well as voltage variations control the operation of series regulator A1Q1.

4-24. Resistors A1A2R2 and A1A2R3 are used in conjunction with A1A2R4 for current foldback operation. When current exceeds capability in a current foldback circuit, the output voltage will begin to drop and the load will receive less current. If the output of the supply is short-circuited, the output current will be limited to considerably less than the current available at full loading.

4-25. The +100 V supply is protected from turn-on and turn-off voltage transients by diodes A1A2CR1 and A1A2CR2. Diode A1A2CR3 provides reverse voltage protection for A1A2C3.

4-26. A separate supply is used as a current source for A1A2Q3/Q4. This supply is used only in the LVPS regulator. The ac voltage from pins 11 and 12 of A1T1 is bridge rectified by A1A1CR1-CR4 and filtered by A1A1C1. The supply output is zener regulated by

A1A2VR1 to approximately 5 volts more positive than the +100 V output.

4-27. The +15-volt supply provides three voltages. Approximately 30 Vac p-p is furnished for plug-in synchronization; an unregulated +27 V is furnished for operation of the HV oscillator; and a regulated +15 V is produced for use in the mainframe and plug-ins.

4-28. The secondary voltage developed by the power transformer at pins 13 and 14 is rectified by full-wave bridge A1A2CR9-A1A2CR12 and filtered by A1C2. Diode A1A1CR21 provides reverse voltage protection. Series regulator A1Q2 controls the amount of load current in order to maintain the output voltage at +15 V. Variations in output voltage are sensed by differential comparator A1A2Q7 and A1A2Q8. A reference voltage derived from the +100 V regulated supply is applied to A1A2Q7, while A1A2Q8 samples any change in output voltage due to load changes. The +15 V adjustment potentiometer A1A2R20 sets the operating point of A1A2Q8. The output of the differential amplifier is coupled to driver A1A2Q5 and used to control the series regulator.

4-29. Load current flows through A1A2R13. The voltage drop across this resistor is used to control the conduction of A1A2Q6, which has its collector coupled to driver A1A1Q5. Both current variations sensed by A1A2Q6 and voltage changes sensed by the differential amplifier are coupled to driver A1A1Q5 to control series regulator A1Q2. Protection from turn-on or turn-off transients is provided by A1A2CR4. Fuse A1F2 protects the +15 V rectifier and transformer in the event of a regulator short circuit.

4-30. The —12.6-volt supply operates in a manner similar to the +15 V supply. Changes in output voltage are sensed by differential comparator A1A2Q11 and A1A2Q12 and coupled to driver A1A2Q9 which controls the conduction of series regulator A1Q3. Current limiting action is provided by A1A2R22 and A1A2Q10. Fuse A1F3 protects against damage due to regulator failure and A1A2CR5 is used for voltage transient protection.

4-31. Operation of the —100 V supply is similar to the +100 V supply. A1A2Q15 and A1A2Q16 operate as a differential comparator, with A1A2Q16 sensing any change in output voltage. Transistor A1A2Q14 with A1A2R33 provides current limiting. Current foldback operation reduces the current output in the event of a short-circuited load. Voltage and current variations are coupled to driver A1A2Q13 which controls the conduction of series regulator A1Q4. Adjustment of the supply output voltage is accomplished with potentiometer A1A2R40. Turn-on/turn-off protection is furnished by A1A2CR6, while A1A2CR7 provides reverse voltage protection for C9.

4-32. GATE AMPLIFIER. The inputs to the gate amplifier are an unblanking gate, a chopped blanking signal, or an externally applied input Z-axis signal. These three signals may be present singly or simultaneously, depending on control settings and signals applied.

4-33. The unblanking gate is first applied as a current to A7Q1, a common base amplifier, then combined in the low impedance emitter circuit of A7Q5 with a current established by the INTENSITY, FIND BEAM, or EXT DISPLAY front-panel controls. Pressing FIND BEAM shunts the adjustable INTENSITY potentiometer to increase emitter current and produce an intensified beam. Setting the horizontal DISPLAY to EXT supplies additional current from the —100 V supply. This establishes an unblanking current level to compensate for removal of the internal unblanking signal from the plug-in, and establishes a nominal brightness level.

4-34. The output voltage of A7Q5 is coupled through emitter follower A7Q6 to complimentary amplifier A7Q7/Q8. Diodes A7CR1 through A7CR4 provide a clamping action to prevent overdriving the amplifier.

4-35. A large negative feedback from the collectors of A7Q7 and A7Q8 ensures that the amplifier gain is very stable. Capacitors A7C6 and A7C8 provide for adjustment of the high frequency feedback and gain. Decreasing the capacitance of A7C6 decreases the high frequency feedback and increases gain, while decreasing the capacitance of A7C8 increases high frequency feedback and decreases gain. Amplifier voltage gain is approximately 10 for Z-axis signals.

4-36. The gate amplifier output unblanking signal is added to the —3200 V output of the high voltage power supply and applied to the CRT control grid. Voltage level changes of the unblanking signal cause corresponding changes to the CRT control grid voltage. Diodes A7CR6 through A7CR9 provide isolation protection against high voltage transients from the CRT control grid.

4-37. An alternate trigger signal is used by multichannel vertical amplifier plug-ins to initiate channel switching action. Transistors A7Q2 and A7Q3 function as a fast-acting switch. With A7Q2 normally conducting and A7Q3 non-conducting, the unblanking gate trailing edge causes A7Q3 to conduct and A7Q2 to cease conducting. The switching output is differentiated and applied to A7Q4, providing a negative-going voltage pulse for vertical amplifier channel switching.

4-38. The input impedance to the Z-axis input is approximately 5100 ohms. An input signal of approximately +2 volts amplitude is sufficient to blank a trace of normal viewing intensity, while an input signal of —2 volts will provide unblanking. Since the gate amplifier has a voltage gain of about 10, a 2-volt input will result in a 20-volt change at the CRT grid.

4-39. HIGH VOLTAGE POWER SUPPLY (HVPS). The HVPS generates three regulated voltages. These are

applied to the cathode (—3150 V), control grid (—3200 V) and post-accelerator (+19 kV) of the CRT to provide the accelerating potential required to produce excitation of the CRT phosphor for a visible trace. The HVPS is shown in simplified from in figure 4-3. Refer to this figure, and to the schematic in Section VIII while reading the following explanation of HVPS operation.

4-40. Chassis-mounted transistor Q1 and transformer A6A1T1 form an oscillator that generates approximately 36 V p-p at 40 kHz. A feedback winding on the transformer provides the regenerative coupling to sustain oscillation. Operating power is provided by the unregulated +27 V supply. The supply source is fused and decoupled.

4-41. The 40-kHz oscillator output is stepped up by the secondary windings of A6T1. Two half-wave rectifiers and a voltage multiplier are used to develop the high voltages necessary for CRT operation.

4-42. The CRT grid voltage is developed by half-wave rectifier A6CR1 and filter A6C1, A6C2, and A6R1 through A6R5. The display intensity lower limit, determined by the CRT grid voltage level, is adjusted by A6R2. The CRT cathode voltage and the focusing voltage, approximately —2270 V, are developed by half-wave rectifier A6CR4 and filter A6C3, A6C4, and A6R7. A6R8 is part of a voltage divider that drops the —3150 V to —2270 V for focus control. Diodes A6CR5 and A6CR6 prevent the CRT grid from becoming positive with respect to the cathode. The CRT post-accelerator voltage is developed by high-voltage multiplier assembly A11.

4-43. Variations in high voltage output are fed back to the high-voltage regulator circuitry consisting of A10Q1, A10Q2, A10Q3, and associated components. The regulator controls the high voltage oscillator bias to maintain high voltage at a constant level. If, for example, the CRT cathode voltage tends to decrease (go more positive), a positive-going signal is applied through the regulator to the base of oscillator Q1. The oscillator then conducts for a greater period of time, causing a larger voltage change at the primary of A6T1. This increases the secondary voltage to restore cathode voltage to the desired level.

4-44. The high-voltage regulator monitors CRT cathode voltage through coupling network A6R9 and A6C5. Resistors A10R3 and A10R4 form a voltage divider between +100 V and the coupling network output. A10R3 adjusts the operating level of FET A10Q1. High voltage fluctuations are sensed by A10Q1 and amplified by A10Q2 and A10Q3. Diodes A10CR4 and A10CR5 provide clamping action to prevent overdriving the high-voltage oscillator. The regulator output is applied through the regenerative winding of A6T1 as bias to the base of Q1, thereby controlling high-voltage oscillator drive.

4-45. CALIBRATOR. The calibrator provides outputs of 10 volts and 250 millivolts at approximately 1-kHz. The calibrator output is a negative-going waveform.

4-46. Transistors A2Q1 and A2Q2 oscillate at a rate determined by the time constant of associated RC components. A2CR1 disconnects the collector of A2Q2 from the negative discharge of A2C3 and A2Q2 cuts off, resulting in a faster rise time. Diodes A2CR2 and A2CR3 protect the transistors from voltage breakdown. A filter network, A2L1 and A2C4, isolates the multivibrator from the —100 V supply.

4-47. With A2Q2 conducting, voltage divider A2R17, A2R18, and A2R19 divides the —100 V supply voltage. The values selected for these resistors permit the output of 10 V and 250 mV. These two outputs are available at the front panel and may be used for probe compensation adjustment and horizontal or vertical sensitivity calibration checks.

4-48. HORIZONTAL AMPLIFIER. The inputs to the horizontal amplifier are an internal sweep signal from

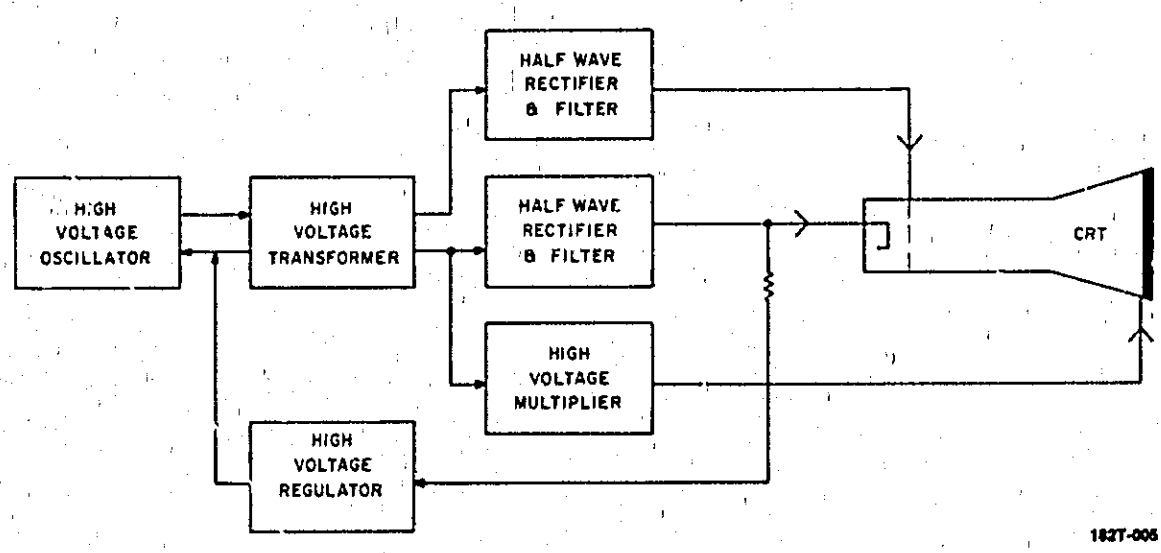

Figure 4-3. High-voltage Power Supply Block Diagram

the plug-in or an external signal applied to the horizontal EXT INPUT jack. Positioning the horizontal DISPLAY to INT grounds the input of the preamplifier and disconnects the external signal preamplifier from the output amplifier. The internal sweep signal is connected through the horizontal DISPLAY switch to the output amplifier.

4-49. Positioning horizontal DISPLAY to EXT disconnects the internal sweep signal and connects the external signal through the preamplifier to the output amplifier. With EXT selected, the amplitude of the signal from the preamplifier is adjustable by rotating the EXT VERNIER control. When the control is in the CAL detent position the output amplitude of the preamplifier is determined by the input amplitude.

4-50. The selected signal is applied to the output amplifier and summed with a current established by the horizontal POSITION control. A horizontal MAGNIFIER allows the gain to be increased by a factor of 10 (X10) or to be directly related to the amplitude of the input signal (X1). The resulting current is converted to a differential signal, amplified, and applied to the horizontal deflection plates of the CRT.

4-51. An external signal applied to the preamplifier is coupled through a divider composed of A5R5 and A5R6 to A5Q1. The output of A5Q2 is coupled through the horizontal EXT VERNER and the horizontal DISPLAY switch. The high input impedance of A5Q1, in conjunction with the voltage divider and A5R4, provides a 1 megohm load to the external circuit. Transistor A5Q2 is an emitter follower that supplies a current, determined by A5R15 and the EXT VERNIER control, to A5Q3.

4-52. A vernier balance adjustment A5R11 is used to establish a zero input voltage reference level. This eliminates horizontal dc shift as the EXT VERNIER control is rotated. The EXT VERNIER provides a range of control of the deflection factor when an EXT INPUT signal is used for horizontal deflection. It has sufficient range to change the deflection factor by at least 10.

4-53. The input signal to A5Q3 is summed in the low impedance emitter circuit with a current established by the horizontal POSITION controls. Fine and coarse positioning operate from a single control, and are mechanically interconnected. Rotating the control first provides fine positioning. When the limit of available rotation of the fine position potentiometer has been reached, the coarse positioning potentiometer becomes effective.

4-54. The output of A5Q3 is coupled through emitter-follower A5Q4 to differential amplifier A5Q5 and A5Q7. The low impedance necessary to drive A5Q5 is provided by A5Q4, and A5Q6 maintains a similar low impedance voltage source for A5Q7.

4-55. The position of the MAGNIFIER switch A5S4 selects either of two values of emitter degeneration between A5Q5 and A5Q7 and controls the gain. As degeneration decreases, gain increases. Two gain levels are provided, X1, and X10. Each has an adjustable element to provide for calibration of the gain. With X1 magnification selected, A5R46 is used to set the gain. With X10 magnification selected A5R44 sets the gain. The emitter potentials of A5Q5 and A5Q7 are balanced by A5R49. This prevents horizontal dc shift as the MAGNIFIER control is switched between ranges.

4-56. The differential signal at the collectors of A5Q5 and A5Q7 is applied to current-fed operational amplifiers A5Q11/A5Q12/A5Q13 and A5Q8/A5Q9/A5Q10. The amplifier low frequency gain is very stable because of the large negative feedback employed, and the high frequency feedback for each side of the amplifier is separately adjustable. High frequency feedback from the collectors of A5Q12/A5Q13 to the base of A5Q11 is controlled by A5C28; high frequency feedback from the collectors of A5Q9/A5Q10 to the base of A5Q8 is controlled by A5C21. Capacitor A5C24 adjusts the ratio of feedback for each side of the amplifier. The output of the amplifiers is a voltage that is connected to the horizontal deflection plates of the CRT.

4-57. Diodes A5CR9/A5CR10 and A5CR4/A5CR5 limit the output to the deflection plates to prevent overdriving. Diodes A5CR8 and A5CR3 prevent A5Q5 and A5Q7 from saturating.

4-58. Pressing the FIND BEAM control disables diode limiter A5CR4/A5CR5 and blocks the signal to A5Q8. The differential gain is effectively cut in half, and the horizontal deflection of the beam is confined to the limits of the CRT.

4-59. POWER SUPPLY DECOUPLING. Decoupling networks are used on each etched circuit assembly for the supply voltages. The use of decoupling is important to prevent extraneous signals or noise from being introduced into circuitry from the power supplies or supply leads. Decoupling also prevents transients originating in other circuits from being introduced.

SECTION V

PERFORMANCE CHECK AND ADJUSTMENTS

5-1. INTRODUCTION.

5-2. This section contains step-by-step procedures for checking instrument performance and for making all internal adjustments. Performance checks should be made in numerical sequence for best results. Also included are test setup illustrations and a list of recommended test equipment.

5-3. The Model 182T is intended for use with a number of different plug-ins. These plug-ins are classified as real time, sampling and TDR, and frequency domain. Certain features of the mainframe apply only to real time plug-ins. The performance checks and adjustment procedures note when these differences occur and indicate which group of plug-ins listed below are covered by the procedures.

Group A Real Time Plug-ins	Group B Sampling and TDR, Frequency Domain Plug-ins
Model Numbers	Model Numbers
1801A, 1803A, 1804A, 1805A, 1806A, 1807A, 1808A, 1809A, 1820C, 1821A, 1824A, 1825A	1810A, 1811A, 1815A/B, 1818A, 8557A, 8558B, 8755A

5-4. EQUIPMENT REQUIRED.

5-5. A complete list of required test equipment and accessories is given in table 5-1. Test equipment equivalent to that recommended may be substituted, provided it meets the required characteristics listed in table 5-1. For best results, use recently calibrated test equipment.

5-6. PERFORMANCE CHECKS.

5-7. The performance checks given in this section are suitable for incoming inspections, preventative maintenance, and troubleshooting. The checks are designed to verify the published instrument specifications. Perform the checks in the order given, and record the measured information on the performance check record at the end of this section.

5-8. ADJUSTMENTS.

5-9. The adjustment procedures are arranged in a recommended sequence. While most adjustments may be made independently, it is recommended that adjustments be made sequentially as a number of adjustments are directly related to preceding or following adjustments.

5-10. PERFORMANCE CHECK RECORD.

5-11. Each measurement point in the performance check is repeated in the performance check record. The pages may be removed for filing. The first time the performance check is made, enter the results on the performance check record and file it for future reference.

5-12. PRELIMINARY SETUP.

5-13. Set the line voltage SELECTOR switch, located on rear panel, to desired power line operating voltage (115 V ac or 230 V ac). Connect instrument to line power source and apply power by turning LINE power switch ON. Allow fifteen minutes for warm-up. Do not install plug-ins.

5-14. PERFORMANCE CHECK PROCEDURES.

5-15. CALIBRATOR. The calibrator function is typically used with group A plug-ins only. This check can be eliminated when using group B plug-ins.

Specification: The calibrator outputs are 10 V and 250 mV, 1-kHz square wave with a rise time of less than 3 μs. The calibrator is checked by comparison with a known amplitude signal.

5-16. Perform calibrator check as follows:

a. Set controls as follows:

MAGNIFIER	X10
DISPLAY	EXT
EXT COUPLING	AC

b. Connect 10 V p-p signal from voltmeter calibrator to EXT INPUT.

c. Obtain horizontal trace by adjusting INTENSITY, FOCUS, and POSITION controls.

Table 5-1. Recommended Test Equipment

Instrument		Required Characteristics	Required For
Type	Model		
Voltmeter Calibrator	HP Model 745A or 6920B	1, 2, 10 V p-p ±0.2%	Calibrator Check Magnifier Check
Test Oscilloscope	HP Model 180C w/1805A & 1825A	Sensitivity; 1 V/div Sweep Speed: 1 μs Rise Time: 3 μs Main Sweep Output	Calibrator Check Gate Ampl Response Adj Transient Response Adj
Test Oscillator	HP Model 652A	50 kHz - 5 MHz at 10 V p-p	Bandwidth Check Trace Alignment Adj Phase Adj
Digital Voltmeter	HP Model 3465A	±100 Vdc ±0.5% 2.5 mA ±2%	LVPS Adj HVPS Adj
Divider Probe	HP Model K05-3440A	Ratio 1000:1 3000 Vdc, ±0.1%	HVPS Adj
Square-wave Generator	HP Model 211B	200-kHz 1 V, p-p Rise Time: 30 μs	Transient Response Adj
Time-mark Generator	HP Model 226A	1-ms markers	Horiz Gain Adj Horiz Linearity Adj
Divider Probe	HP Model 10002B	Ratio 50:1 ±3%	Gate Ampl Response Adj
BNC Tee	HP Part No. 1250-0781	BNC 50-ohm	Phase Adj Transient Response Adj
BNC Cable	HP Model 10502A	9 inch	Check & Adj
BNC Cable (2)	HP Model 10501A	44 inch	Adj

d. Adjust EXT VERNIER to obtain displayed trace of exactly 10 divisions.

e. Disconnect voltmeter calibrator from EXT INPUT. Do not disturb EXT VERNIER setting.

f. Connect CALIBRATOR 10 V output to EXT INPUT.

g. Note displayed trace of 10 ±0.1 divisions.

h. Disconnect CALIBRATOR 10 V output from EXT INPUT.

i. Observe CALIBRATOR 10 V output using monotor oscilloscope.

j. Rise time of calibrator waveform (leading edge) should be 3 μs or less. Rise time is measured at 10% to 90% amplitude points.

NOTE

The 250 mV output should be correct after checking the 10 V output, however the 250 mV can be checked by comparison to a known source.

5-17. MAGNIFIER. This check is applicable to both group A or group B plug-ins, however calibration is relatively unimportant when using group B plug-ins.

Specification: sweep magnifier increases gain by factors of X1 and X10. The magnifier is checked by applying a known signal and verifying that the multiple of the switch setting is displayed on the CRT screen.

5-18. Perform magnifier check as follows:

a. Set controls as follows:

MAGNIFIER	X1
DISPLAY	EXT
EXT VERNIER	CAL

b. Connect 10 V p-p signal from voltmeter calibrator output to EXT INPUT.

c. Note displayed trace of 10 ±0.5 divisions.

d. Set voltmeter calibrator for output of 1 V p-p.

e. Set MAGNIFIER to X10.

f. Note displayed trace of 10 ±0.5 divisions.

5-19. BANDWIDTH. This check is applicable only when using group A plug-ins in high frequency X-Y applications. Bandwidth is relatively unimportant when using group B plug-ins.

Specification: dc coupled, dc to 5 MHz; ac coupled 5 MHz. To check bandwidth, a test oscillator is used to apply 50-kHz, 10-div display. The frequency is then increased to 5 MHz. The signal amplitude should be 7.1 div or greater.

5-20. Perform bandwidth check as follows:

a. Apply a 50-kHz signal from test oscillator to HORIZONTAL EXT INPUT connector.

b. Set MAGNIFIER control to X1 and adjust INTENSITY for visible display.

c. Adjust test oscillator amplitude and Model 182T POSITION controls for a 10-div display.

d. Note indication on test oscillator output meter.

e. Increase test oscillator output frequency to 5 MHz.

f. Increase test oscillator output to that noted in step d.

g. Display deflection should be >7.1 div.

h. If deflection is less than 7.1 div verify Phase/Bandwidth switch, A5S1, is in Bandwidth position.

5-21. FIND BEAM. This check is applicable when using either group A or group B plug-ins.

Specification: display returns to viewing area of CRT when FIND BEAM is pressed. To check FIND BEAM the display is positioned off screen and when FIND BEAM pushbutton is pressed display returns to screen.

5-22. Perform FIND BEAM check as follows:

a. Set controls as follows:

INTENSITY	fully ccw
POSITION	fully ccw

b. Press FIND BEAM pushbutton.

c. Note that intensified beam is displayed.

5-23. This completes the Performance Check. If the instrument does not meet specifications as listed in table 1-1, the Adjustment Procedure that follows should be accomplished. If this does not result in satisfactory instrument performance refer to Section VIII of this manual for troubleshooting and maintenance information.

5-24. ADJUSTMENT PROCEDURE.

WARNING

Read the Safety Summary at the front of this manual before performing adjustment procedures.

5-25. The following paragraphs describe the procedure to calibrate the instrument so that it will perform as specified in table 1-1. Use the equipment recommended in table 5-1 or similar equipment having at least equivalent characteristics. Use only a nonmetallic adjustment tool. Adjustment locations are identified in figure 5-4.

5-26. The adjustment procedures should be performed in the sequence listed since some adjustments are dependent on control settings and results of previous steps. The adjustments may be accomplished individually, if desired, by referring to the preliminary control settings and the steps before the desired procedure.

5-27. COVER REMOVAL. To gain access to the adjustments, top and bottom covers and the rear LVPS access panel must be removed as shown in figure 5-1. Remove the covers as follows:

a. Ensure that LINE power switch is OFF; disconnect power plug from ac power source.

b. Release 3 quarter-turn fasteners on each side of instrument. Cover retainers will be completely free.

c. Loosen 2 captive screws located on handle ends.

d. Remove top cover by expanding open end slightly and pulling away from instrument.

e. Remove bottom cover by extending tilt stand, expanding open end of cover, and pulling away from instrument.

f. Remove rear access cover by releasing single quarter-turn fastener.

5-28. PRELIMINARY ADJUSTMENT SETUP. Install plug-ins in Model 182T. Set line voltage SELECTOR switch, located on rear panel, to desired power line operating voltage 115 V ac or 230 V ac. Connect instrument to line power source and apply power by turning LINE power switch ON. Allow fifteen minutes for warm-up.

5-29. LOW VOLTAGE POWER SUPPLY (LVPS). This adjustment is applicable when using either group A or group B plug-ins. Perform LVPS adjustment as follows:

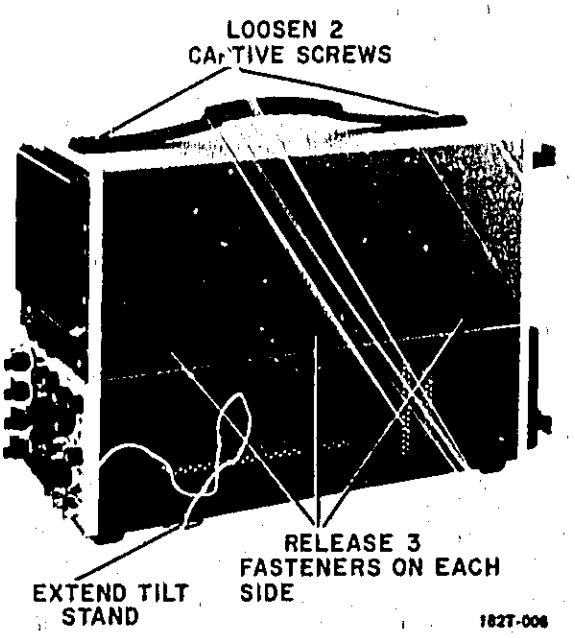

Figure 5-1. Cover Removal

a. Using digital voltmeter measure voltages at test points listed in table 5-2. Adjustment locations are shown in figure 5-2.

NOTE

Tolerances listed in table 5-2 are not critical to actual instrument operation, but should be adhered to if plug-in interchangeability among mainframes is desired.

Table 5-2. Low Voltage Power Supply Adjustments

Test Points	Measure	Adjust
A1A2TP4	−100 V ±0.1 V	A1A2R40
A1A2TP1	+100 V ±0.1 V	A1A2R11
A1A2TP3	−12.6 V ±0.1 V	A1A2R29
A1A2TP2	+15 V ±0.1 V	A1A2R20

5-30. HIGH VOLTAGE POWER SUPPLY (HVPS). This adjustment is applicable when using either group A or group B plug-ins. Tight voltage tolerance is only necessary to single sweep applications of group A plug-ins. Perform HVPS adjustment as follows:

WARNING

Contact with high-voltage power supply voltage can result in injury or death.

a. Monitor −100 V at A1A2TP4 with dc voltmeter using a 1000:1 divider probe.

b. Observe voltage reading and note result.

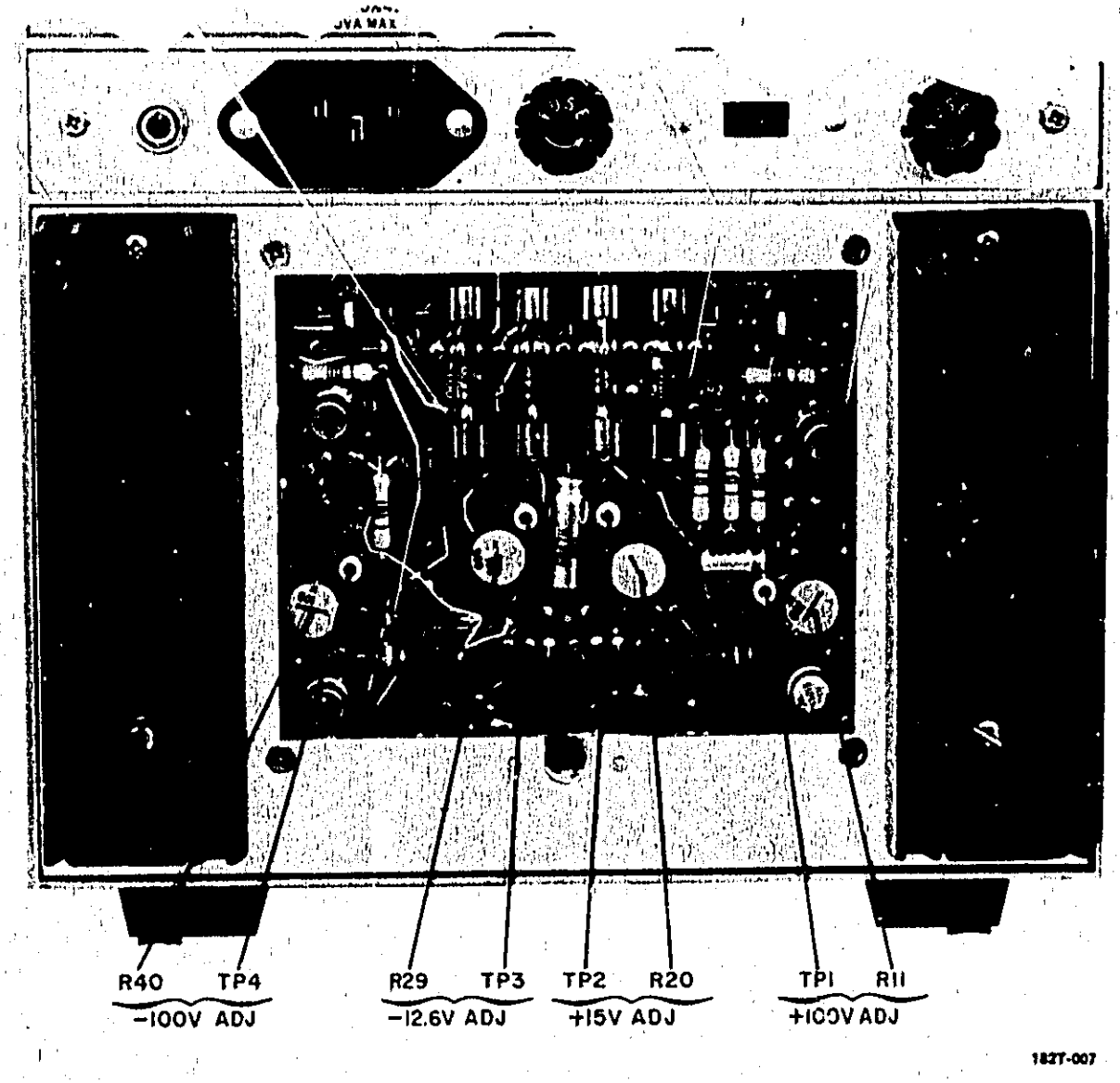

Figure 5-2. Low Voltage Supply Adjustments

c. Multiply 31.50 by result obtained in step b.

d. Monitor voltage at A6TP1 with dc voltmeter using 1000:1 divider probe.

e. Adjust HV Adj, A10R3, to obtain same voltage reading as calculated in step c.

5-31. ASTIGMATISM. This adjustment is applicable when using either group A or group B plug-ins. When using group B plug-ins adjust vertical controls so spot contains no appreciable noise. Perform astigmatism adjustment as follows:

a. Set DISPLAY to EXT.

b. Center low intensity spot with HORIZONTAL POSITION controls.

c. Adjust FOCUS and ASTIG front-panel screwdriver adjustment for smallest round spot.

5-32. INTENSITY LIMIT. This adjustment is applicable when using either group A or group B plug-ins. The intensity limit normally needs adjustment at time of CRT replacement only. Adjustment is only important to single sweep application with group A plug-ins. Perform intensity limit adjustment as follows:

a. Set DISPLAY to EXT.

b. Set INTENSITY control to center (12 o'clock) position.

c. Adjust Intensity Limit Adj, A6R2, to just extinguish spot.

5-33. TRACE ALIGNMENT. This adjustment is applicable when using either group A or group B plug-ins. When using group B plug-ins, the front-panel TRACE ALIGN can be set using any free-running trace or an input into the external horizontal input. Y align can be set with any vertical information inserted with horizontal in EXT and no external input applied. Perform trace alignment as follows:

a. Set MAGNIFIER to X1.

b. Set EXT COUPLING to AC.

c. Connect test oscillator 400-Hz, 10 V-output to EXT INPUT.

d. Position trace on center horizontal graticule line.

e. Set INTENSITY and FOCUS to view sharply defined trace.

f. Adjust TRACE ALIGN front-panel screwdriver adjustment, A2R23, to align trace parallel to horizontal graticule line.

g. Connect test oscillator 400-Hz, 10 V-output to vertical plug-in.

h. Set plug-in controls to obtain vertical trace.

i. Adjust Y ALIGN Adj, A5R61, to align vertical trace parallel to vertical graticule line.

NOTE

Exact adjustment is very important if repeatable rise times are to be obtained in both +UP and —UP operations of the vertical plug-in.

j. Disconnect test oscillator from vertical plug-in input.

5-34. GATE AMPLIFIER RESPONSE. This adjustment is applicable only when using group A plug-ins at fast sweep speeds. Perform gate amplifier response adjustment as follows:

a. Set following controls as applicable:

DISPLAY	INT
Main Time/Div	0.1 μs
Main Vernier	CAL
Sweep Mode	AUTO
Sweep Display	MAIN
Delayed Time/Div	OFF

b. Set monitor oscilloscope controls as follows:

Volts/Div	0.2
Time/Div	0.1 μs
Trigger Source	INT
Slope	+
Coupling	DC

c. Using 50:1 divider probe and monitor oscilloscope, observe signal at collector of A7Q8.

d. Rotate INTENSITY control cw for gate amplitude of 6 divisions (approximately 60 V).

e. Adjust Gate Resp Adj No. 2, A7C6, and Gate Resp Adj No. 1, A7C8, for optimum fast rise time and pulse flat-top response.

f. Disconnect monitor oscilloscope.

5-35. DC BALANCE. This adjustment is applicable when using either group A or group B plug-ins. Perform dc balance adjustment as follows:

a. Set MAGNIFIER to X10.

b. Set DISPLAY to EXT.

c. Center spot with POSITION control.

d. Set MAGNIFIER to X1.

e. Adjust DC Bal Adj, A5R49, to recenter spot.

f. Repeat steps a through e until spot does not shift from center while switching MAGNIFIER from X1 to X10.

5-36. VERNIER BALANCE. This adjustment is applicable when using either group A or group B plug-ins. Perform vernier balance adjustment as follows:

a. Set MAGNIFIER to X1.

b. Rotate EXT VERNIER from CAL position to fully ccw.

c. Center spot with POSITION control.

d. Set EXT VERNIER to CAL.

e. Adjust Vern Bal Adj, A5R11, to recenter spot.

f. Repeat steps b through e until spot does not shift from center when EXT VERNIER is rotated.

5-37. HORIZONTAL GAIN. This adjustment is applicable when using either group A or group B plug-ins but critical only to interchangeability of time bases of group A. When using group B plug-ins, gain is not critical and adjustment may be accomplished by inserting any known peak-to-peak voltage into EXT HORIZONTAL INPUT. Perform horizontal gain adjustment as follows:

a. Set controls as follows:

HORIZONTAL DISPLAY ..... EXT
HORIZONTAL MAGNIFIER X1
EXT VERNIER ..... CAL

b. Check +100 V supply for +100 V ±0.1 V.

c. Connect 40-kilohm 0.1% 1/2 W resistor between +100 V supply and emitter of A5Q3. Keep connection lead length short as possible to avoid stray pick-up or oscillations.

CAUTION

With resistor disconnected, +100 V is present at open lead of resistor. Do not leave resistor connected throughout adjustment as thermal rise will shift current reference.

d. Adjust HORIZONTAL POSITION to center left-hand spot exactly on left-hand (first) vertical graticule line.

e. While alternately connecting and disconnecting resistor to emitter of A5Q3, adjust X1 Gain Adj, A5R46, for exactly 10-major divisions of separation between spot positions.

f. Set HORIZONTAL DISPLAY to INT and plug-in for 1 ms/div sweep speed.

g. Apply 1-ms markers from time-mark generator to input of vertical plug-in.

h. Adjust plug-in timing for 1 ms/div to obtain precisely one marker per division.

i. Set HORIZONTAL MAGNIFIER to X10.

j. Adjust X10 Gain Adj, A5R44, to obtain display of exactly 1 marker for 10 divisions.

k. Disconnect time-mark generator.

l. Disconnect 40-kilohm resistor from +100 V supply.

5-38. PHASE ADJUSTMENT. This adjustment is applicable only when using group A plug-ins for X-Y application. Perform phase adjustment as follows:

a. Set controls as follows:

Phase/Bandwidth Switch ..... Phase
HORIZONTAL MAGNIFIER X1
HORIZONTAL DISPLAY ..... EXT
EXT VERNIER ..... CAL

b. Connect 10-kHz sine-wave output of test oscillator to HORIZONTAL EXT INPUT and to vertical plug-in channel A input

c. Adjust test oscillator output to obtain 8-div display.

d. Adjust Input Comp Adj, A5C9, for display of single diagonal line (no phase shift).

e. Set test oscillator for output of 100-kHz sine wave.

f. Adjust Phase Adj, A5C12, for display of single diagonal line (no phase shift).

g. Repeat steps b through f until no phase shift occurs for either frequency.

h. Disconnect test oscillator.

i. Return Phase/Bandwidth switch to Bandwidth position.

5-39. TRANSIENT RESPONSE. This adjustment is applicable when using group A plug-ins and only after major repairs or complete board replacement has been made. Omit this adjustment procedure for normal calibration and perform the Horizontal Linearity adjustment.

a. Use test setup (figure 5-3).

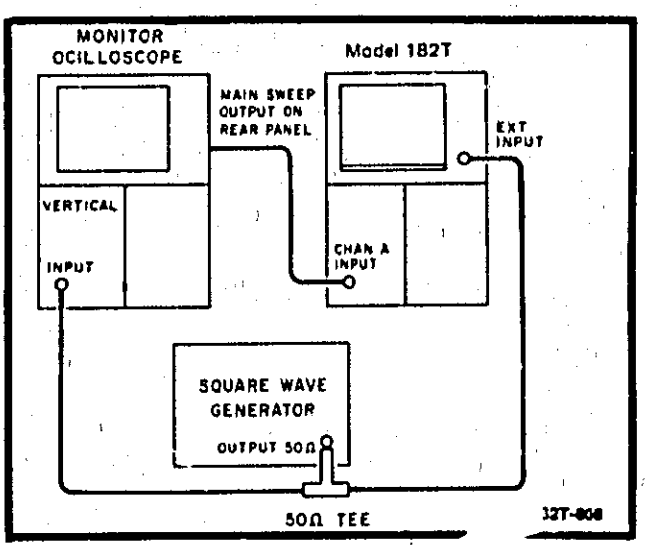

Figure 5-3. Transient Response Adj. Test Setup

b. Set DISPLAY to EXT.

c. Set square wave generator for an output of 1 V p-p at 200-kHz repetition rate.

d. Set monitor oscilloscope time base to 1 μs/div and synchronize monitor oscilloscope with 200-kHz signal.

e. Adjust vertical plug-in volts/div and vernier controls to obtain an 8-div. display.

f. Observe displayed waveform. At this stage of adjustment waveform will typically exhibit 5% (approximately 0.5 div) overshoot. If overshoot is greater, adjust HF Adj No. 1 A5C21, HF Adj No. 2 A5C24, and HF Adj No. 3 A5C28 to obtain flat-top response with approximately 5% overshoot on lower right-hand corner of displayed pulse.

NOTE

Capacitors for HF Adj No. 1 and HF Adj No. 3 should be adjusted so their slugs are almost equally extended.

5-40. HORIZONTAL LINEARITY. This adjustment is applicable only when using group A plug-ins at fast sweep speeds. Before proceeding with this adjustment check linearity and if magnified sweep timing is within specifications do not perform this adjustment. To perform horizontal linearity check proceed as follows:

NOTE

Ensure that time base has been properly calibrated before proceeding with this adjustment.

a. Set HORIZONTAL DISPLAY to INT.

b. Connect 4 V p-p, 50-MHz sine-wave output from time-mark generator to vertical input.

c. Set HORIZONTAL MAGNIFIER TO X10.

d. Select fastest sweep speed (.05 or .1 μs/div) and obtain display.

e. Adjust HF Adj No. 1, A5C20, No. 2, A5C24, and No. 3, A5C28, for best overall linearity of center 80 divisions of available display. Use HORIZONTAL POSITION control to permit viewing right, center, and left portions of display. HF Adj No. 1 affects right portion, HF Adj No. 2, center portion, and HF Adj No. 3, left portion of sweep.

f. Disconnect time-mark generator.

5-41. Tnis completes the adjustment procedure. If desired, the instrument performance may be tested to specifications using the Performance Check procedure. If satisfactory adjustment or instrument performance is not obtained refer to Section VIII of this manual for trouble-shooting information.

PERFORMANCE CHECK RECORD
MODEL 182T

Instrument Serial Number _____ Date _____

Check	Specification	Measured
CALIBRATOR		
Amplitude	10 div ± 0.1 div	_____
Rise Time	<3 μs	_____
MAGNIFIER		
X1	10 div ± 0.5 div	_____
X10	10 div ± 0.5 div	_____
BANDWIDTH	>7.1 div	_____
FIND BEAM	Intensified Beam on Screen	_____

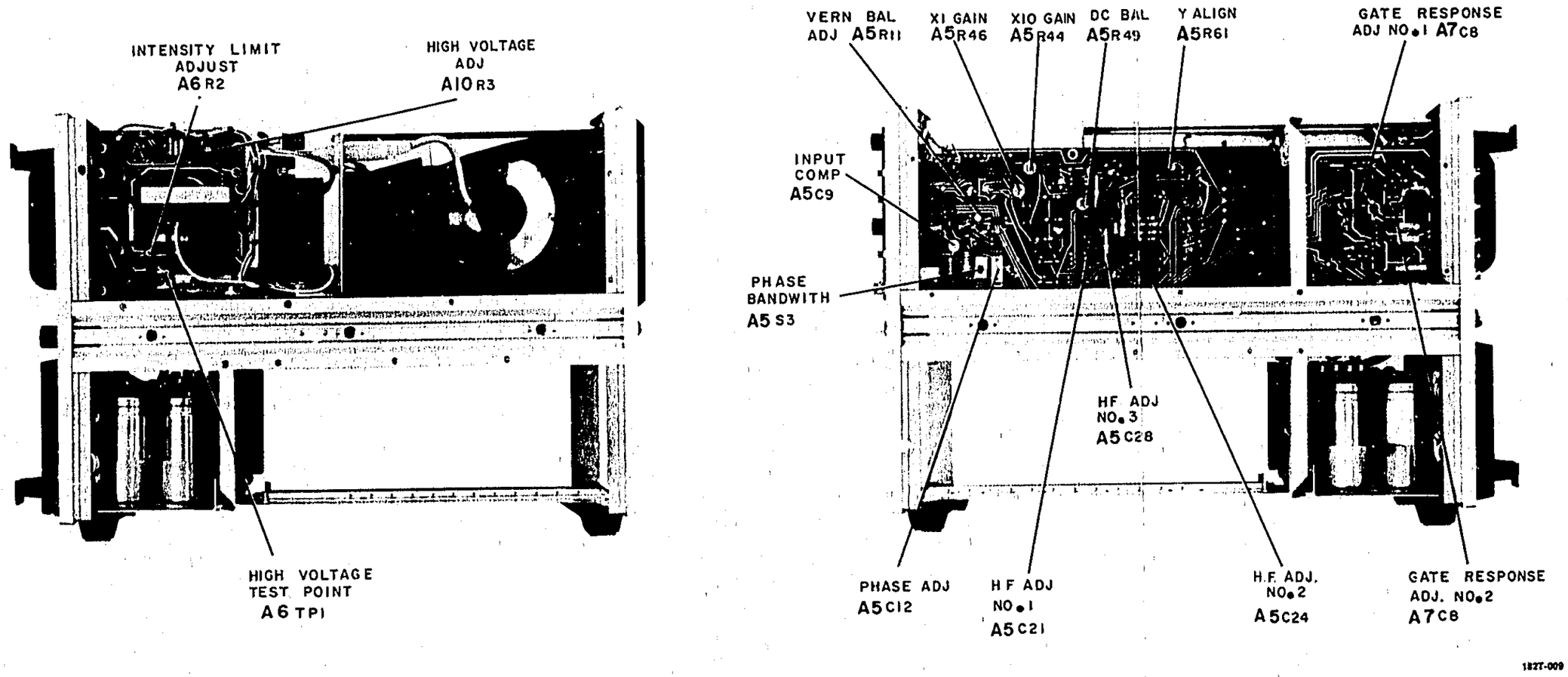

Figure 5-4. Adjustment Locations

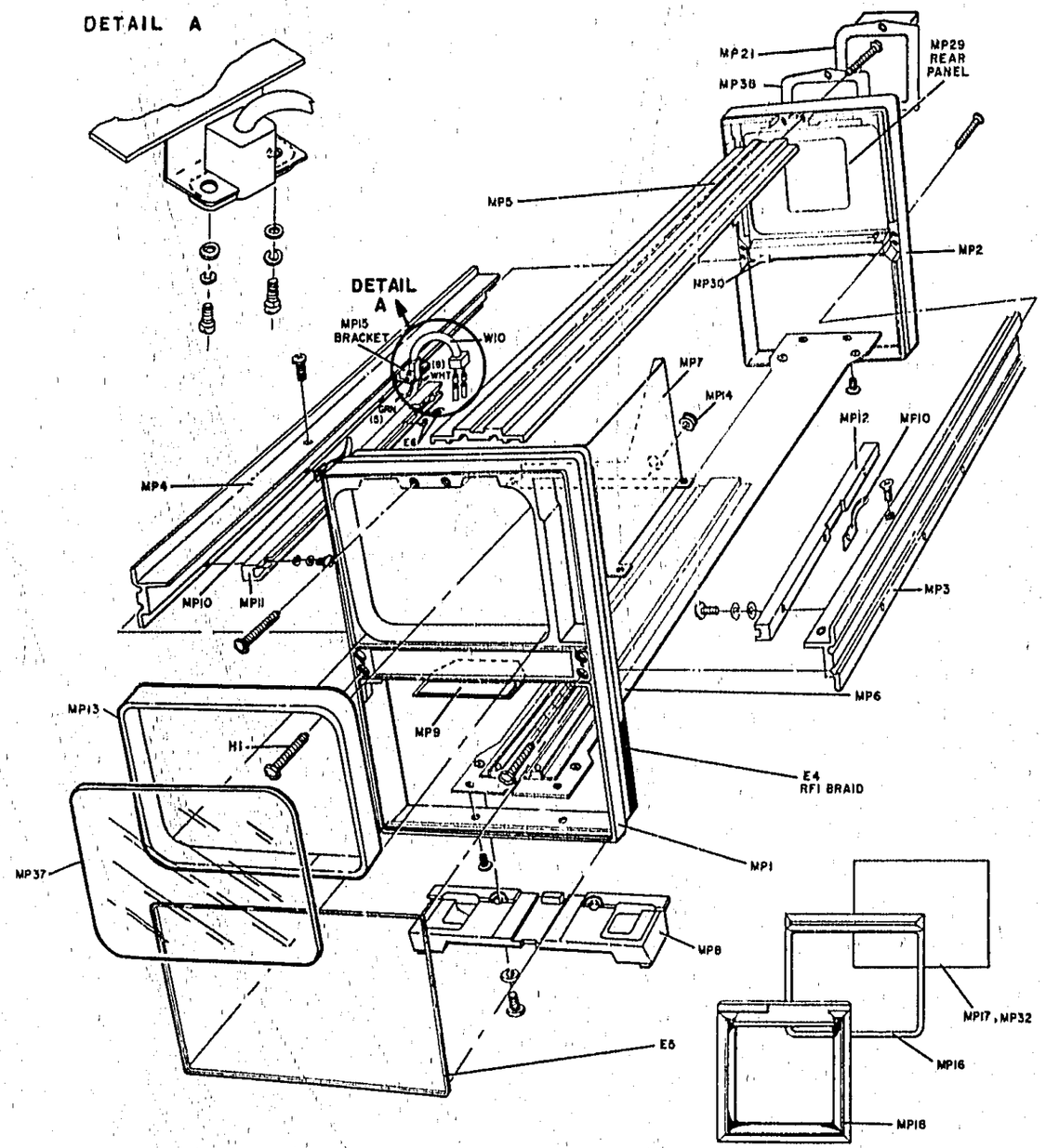

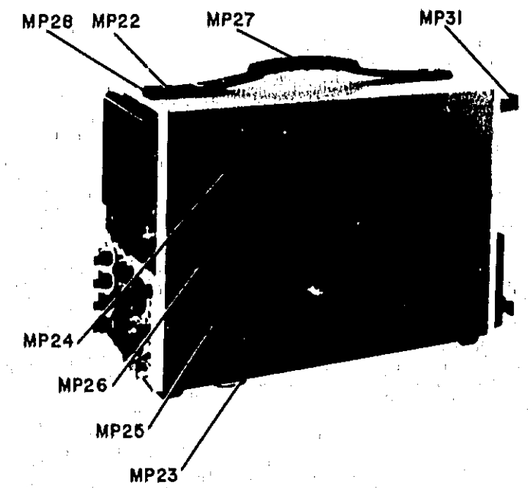

182T-010-06-76

Figure 6-1. Model 182T Mechanical Parts

SECTION VI

REPLACEABLE PARTS

6-1. INTRODUCTION.

6-2. This section contains information for ordering replacement parts. The abbreviations used in the parts list are described in table 6-1. Table 6-2 lists the parts in alphanumeric order by reference designation and includes the manufacturer and manufacturer's part number. Table 6-3 contains the list of manufacturers' codes.

6-3. ORDERING INFORMATION.

6-4. To obtain replacement parts from Hewlett-Packard, address order or inquiry to the nearest Hewlett-Packard Sales/Service Office and supply the following information:

a. Instrument model and serial number.

b. HP part number of item(s).

c. Quantity of part(s) desired.

d. Reference designation of part(s).

6-5. To order a part not listed in the table, provide the following information:

a. Instrument model and serial number.

b. Description of the part, including function and location in the instrument.

c. Quantity desired.

Table 6-1. Abbreviations for Replaceable Parts List

A	AMPERE(S)
ASSY	ASSEMBLY
BD	BOARD(S)
BH	BINDER HEAD
BP	BANDPASS
C	CENTI (10^{-2})
CAR	CARBON
CCW	COUNTERCLOCKWISE
CER	CERAMIC
CMO	CABINET MOUNT ONLY
COAX	COAXIAL
COEF	COEFFICIENT
COMP	COMPOSITION
CONN	CONNECTOR(S)
CRT	CATHODE-RAY TUBE
CW	CLOCKWISE
D	DECI (10^{-1})
DEPC	DEPOSITED CARBON
DP	DOUBLE POLE
DT	DOUBLE THROW
ELECT	ELECTROLYTIC
ENCAP	ENCAPSULATED
EXT	EXTERNAL
F	FARAD(S)
FET	FIELD-EFFECT TRANSISTOR(S)
FH	FLAT HEAD
FIL H	FILLISTER HEAD
FXD	FIXED
G	GIGA (10^{9})
GE	GERMANIUM
GL	GLASS
GRD	GROUNDED
H	HENRY(IES)
HG	MERCURY
HP	HEWLETT-PACKARD
HZ	HERTZ
IF	INTERMEDIATE FREQ.
IMPG	IMPREGNATED
INCD	INCANDESCENT
INCL	INCLUDE(S)
INS	INSULATION(ED)
INT	INTERNAL
K	KILO (10^{3})
KG	KILOGRAM
LB	POUND(S)
LH	LEFT HAND
LIN	LINEAR TAPER
LOG	LOGARITHMIC TAPER
LPF	LOW-PASS FILTER(S)
LVR	LEVER
M	MILLI (10^{-3})
MEG	MEGA (10^{6})
MET FILM	METAL FILM
MET OX	METAL OXIDE
MFR	MANUFACTURER
MINAT	MINIATURE
MOM	MOMENTARY
MTG	MOUNTING
MY	MYLAR
N	NANO (10^{-9})
N/C	NORMALLY CLOSED
NE	NEON
N/O	NORMALLY OPEN
NOP	NEGATIVE POSITIVE ZERO (ZERO TEMPERATURE COEFFICIENT)
NPN	NEGATIVE-POSITIVE-NEGATIVE
NSR	NOT SEPARATELY REPLACEABLE
OBD	ORDER BY DESCRIPTION
OH	OVAL HEAD
OX	OXIDE
P	PEAK
PC	PRINTED (ETCHED) CIRCUIT(S)
PF	PICOFARADS
PHL	PHILLIPS
PIV	PEAK INVERSE VOLTAGE(S)
PNP	POSITIVE-NEGATIVE-POSITIVE
P/O	PART OF
PORC	PORCELAIN
POS	POSITION(S)
POT	POTENTIOMETER(S)
P-P	PEAK-TO-PEAK
PRGM	PROGRAM
PS	POLYSTYRENE
PWV	PEAK WORKING VOLTAGE
RECT	RECTIFIER(S)
RF	RADIO FREQUENCY
RFI	RADIO FREQUENCY INTERFERENCE
RH	ROUND HEAD OR RIGHT HAND
RMO	RACK MOUNT ONLY
RMS	ROOT MEAN SQUARE
RWV	REVERSE WORKING VOLTAGE
S-B	SLOW-BLOW
SCR	SILICON CONTROLLED RECTIFIER
SE	SELENIUM
SEC	SECOND(S)
SECT	SECTION(S)
SI	SILICON
SIL	SILVER
SL	SLIDE
SP	SINGLE POLE
SPL	SPECIAL
ST	SINGLE THROW
STD	STANDARD
TA	TANTALUM
TD	TIME DELAY
TFL	TEFLON
TGL	TOGGLE
THYR	THYRISTOR
TI	TITANIUM
TNLDIO	TUNNEL DIODE(S)
TOL	TOLERANCE
TRIM	TRIMMER
U	MICRO (10^{-6})
V	VOLTS
VAR	VARIABLE
VDCW	DC WORKING VOLT(S)
W	WATT(S)
W/	WITH
WIV	WORKING INVERSE VOLTAGE
W/O	WITHOUT
WW	WIREWOUND

Table 6-2. Replaceable Parts

Reference Designation	HP Part Number	Qty	Description	Mfr Code	Mfr Part Number
			CHASSIS PARTS & MISCELLANEOUS		
A1	00182 60034		ASSY:LOW VOLTAGE POWER MODULE	28480	00182 60034
A2	00182 60038		ASSY:CONTROL MODULE	28480	00182 60038
A3	00182 60019		ASSY:INTERCONNECT MODULE	28480	00182 60019
A4	00182 60039		ASSY:AC POWER	28480	00182 60039
A5	00182 60035		ASSY:HORIZONTAL AMPLIFIER MODULE	28480	00182 60035
A6	00182-61102		ASSY:H.V. OSC. RECTIFIER BOARD	28480	00182-61102
A7	00182-66515		ASSY:GATE AMPLIFIER BOARD	28480	00182-66515
A8	00180 66551		ASSY:SWEEP GATE OUTPUT BOARD	28480	00180 66551
A9	00182-60029		ASSY:CRT MODULE	28480	00182-60029
A10	00182-66513		ASSY:H.V. REGULATOR BOARD	28480	00182-66513
A11	0960-0117	1	ASSY:H.V. MULTIPLIER(NOT REPAIRABLE)	28480	0960-0117
A12	00182 60023		MODULE:HIGH VOLTAGE (INCLUDES A6, A10, A11, E1, E7, E8, F3, MP20, Q1, AND W7)	28480	00182 60023
E1	0362 0227	4	TERMINATION:CRIMP LUG	27264	2125
E2	0362 0227		TERMINATION:CRIMP LUG	27264	2125
E3	0362-0227		TERMINATION:CRIMP LUG	27264	2125
E4	8160-0204	1	BRAID:MONEL-NEOPRENE SPONGE STRIP	12881	01-06-01-1756
E5	4320-0231	2	RUBBER:RFI	00000	DBD#
E6	0363-0006	1	CONTACT:CONNECTOR SWITCH	28480	0363-0006
E7	0340-0450	1	WASHER:TRANSISTOR INSULATOR	04713	14852600F12
E8	0340-0451	1	WASHER:INSULATED, TRANSISTOR	04713	14852600F03
F3		1	FUSE:0.75A 250V	75915	F02GR750A
F4	2110-0004	1	FUSE:CARTRIDGE 1/4 AMP 250V	75915	3AG/CAT. 312.250
H1	0624-0234	12	SCREW:TAPPING 8-18 THREAD 1.000" LG	00000	DBD
H2			NOT ASSIGNED		
H3	2200-0165	2	SCREW:FLAT HD POZI DR 4-40 X 1/4"	00000	DBD
J1	1250-0083		CONNECTOR:BNC	02660	31-221-1020
J2	1250-0083		CONNECTOR:BNC	02660	31-221-1020
J3	1250-0083		CONNECTOR:BNC	02660	31-221-1020
J4	1250-0083		CONNECTOR:BNC	02660	31-221-1020
J5	1250-0083		CONNECTOR:BNC	02660	31-221-1020
MP1	00182-22001	1	FRAME:FRONT	28480	00182-22001
MP2	00182-22004	1	FRAME:REAR	28480	00182-22004
MP3	00182-23701	1	SIDE RAIL:RIGHT	28480	00182-23701
MP4	00182-23702	1	SIDE RAIL:LEFT	28480	00182-23702
MP5	00182-63701	1	RAIL ASSY:TOP	28480	00182-63701
MP6	00182-64101	1	PLATE:BOTTOM	28480	00182-64101
MP7	00182-01201	1	BRACKET:SHIELD	28480	00182-01201
MP8	5040-0445	2	FOOT:BOTTOM	28480	5040-0445
MP9	00182-00604	1	SHIELD:FOCUS	28480	00182-00604
MP10	00180-09104	2	CLIP:GROUND	28480	00180-09140
MP11	0403-0128	1	GUIDE:PC BD PLUG-IN(LEFT)	28480	0403-0128
MP12	0403-0129	1	GUIDE:PC BD PLUG-IN(RIGHT)	28480	0403-0129
MP13	0460-0778	1	TAPE:GRAY 0.750" WIDE	00000	DBD
MP14	0400-0010	1	GROMMET:VINYL 0.250" ID	00000	DBD#
MP15	00182-01212	1	BRACKET:VERTICAL CABLE	28480	00182-01212
MP16	00182-60501	1	FRAME:ADAPTER	28480	00182-60501
MP17	5060-0547	1	KIT:CONTRAST FILTER, BLUE	28480	5060-0547
MP18	00182 60037	1	BEZEL ASSY	28480	00182 60037
MP19	00182-60025	1	H.V. COVER ASSY	28480	00182-60025
MP20	00182-01211	1	BRACKET:H.V.	28480	00182-01211
MP21	01701 04108		COVER.CRT	28480	01701 04108
MP22	1390-0153	2	PANEL FASTENER	00000	DBD
MP23	1490-0710	1	STAND:TILT	28480	1490-0710
MP24	00182-04105	1	COVER:TOP, OLIVE GRAY	28480	00182-04105
MP25	00182-04106	1	COVER:BOTTOM, OLIVE GRAY	28480	00182-04106
MP26	00182-23705	2	COVER:RETAINER	28480	00182-23705
MP27	00182-24901		HANDLE	28480	00182-24901
MP28	01200-42301	2	RETAINER:HANDLE	28480	01200-42301
MP29	00182 60024	1	PANEL:REAR, TOP	28480	00182 60024
MP30	00182-01205	2	BRACKET:LOW VOLTAGE POWER SUPPLY	28480	00182-01205
MP31	5040-0447	1	FOOT:REAR(LONG)	28480	5040-0447
MP32	00182 62701	1	FILTER SCREEN:BLACK OXIDE	28480	00182 62701
MP33	00182 24702	2	SPACER:CRT CLAMP	28480	00182 24702
MP34	00182 62701	1	FILTER ASSY:CONTRAST	28480	00182 62701
MP35	00182 00206	1	PANEL: ACCESS TO A1	28480	00182 00206
MP36	00182 00206	1	PANEL ACCESS	28480	00182 00206
MP37	00182 24101	1	FACEPLATE:CRT SAFETY, CLEAR	28480	00182 24101
MP38	5001-1081	1	SPACER:CRT COVER	28480	5001-1081
Q1	00182 62902	1	TRANSISTOR ASSY:H.V. OSCILLATOR	28480	00182 62902
R1	0683 1045	1	R:FXD COMP 100K OHMS 5% 1/4W	01121	CB 1045
V1	5083 3970	1	CRT:P39 ALUM.	28480	5083 3970
W1	8120-1538	1	CABLE ASSY:POWER 7.5 FT.	28480	8120-1538
W2	00182 61614	1	CABLE ASSY:CRT (INCL. R1, E1, E2, XV1)	28480	00182 61614
W3	00182 61611	1	CABLE:COAX Z-AXIS (INCL. E2)	28480	00182 61611
W4	00182 61613	1	CABLE ASSY:COAS	28480	00182 61613
W5	00182 61615	1	CABLE ASSY:REG.	28480	00182 61615
W6	00182 61617	1	CABLE:CRT VERTICAL	28480	00182 61617
W7	00182 61612	1	CABLE ASSY:H.V.	28480	00182 61612
W8	00182 61616	1	CABLE ASSY:CRT TO A2	28480	00182 61616
XV1	1200-0037	1	SOCKET:CRT TUBE	72825	97097

See introduction to this section for ordering information

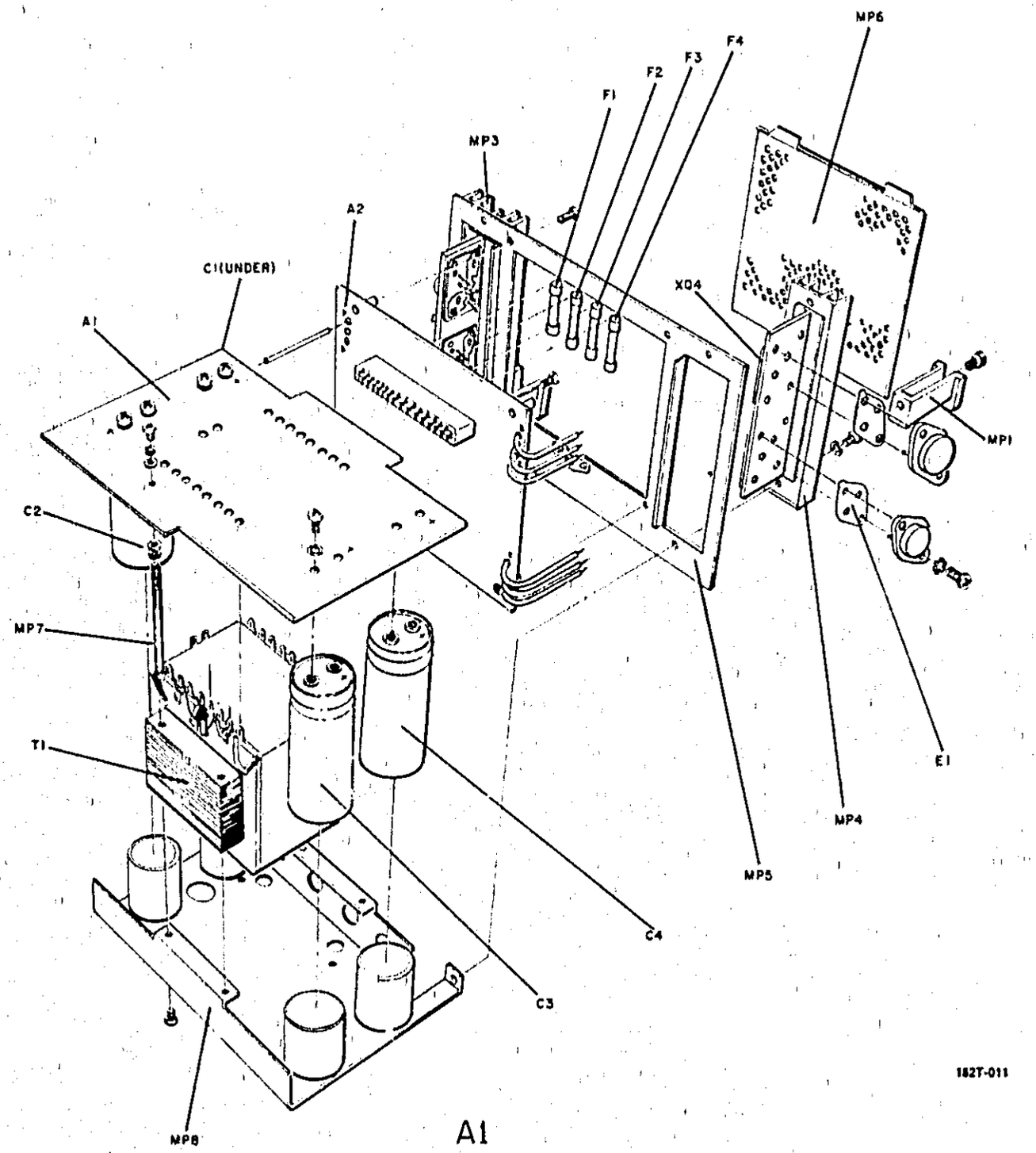

Figure 6-2.
Low Voltage Power Module Exploded View

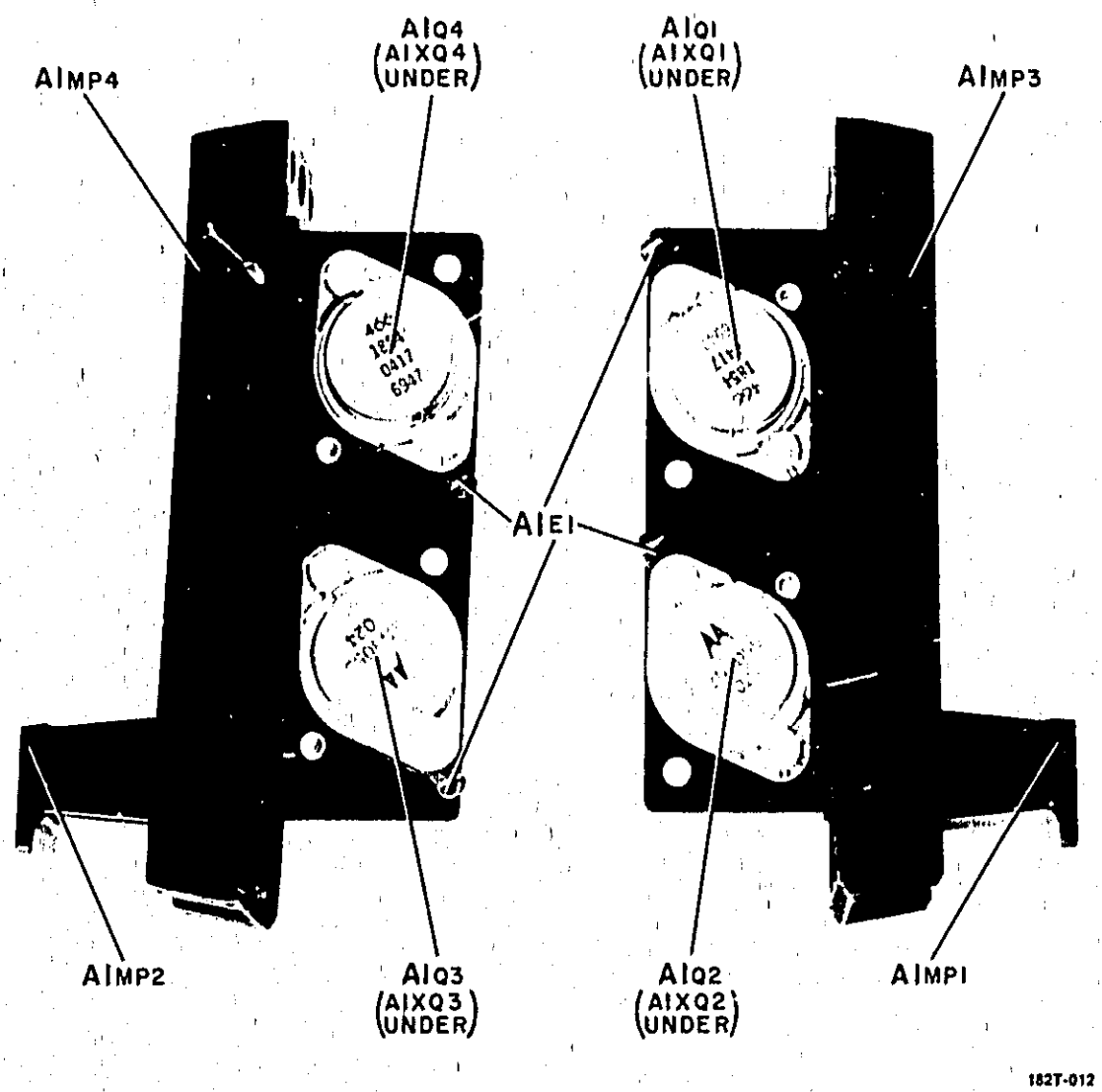

Figure 6-3. Series Regulator Parts Identification

Table 6-2. Replaceable Parts (Cont'd)

Reference Designation	HP Part Number	Qty	Description	Mfr Code	Mfr Part Number
A1	00182 60034	1	ASSY:LOW VOLTAGE POWER MODULE	28480	00182 60034
A1C1	0180-1807	2	C:FXD ELECT 290 UF +50-10% 200VDCW	56289	32D291F200AB2A-DOB
A1C2	0180-1865	1	C:FXD ELECT 2100 UF +75-10% 40VDCW	56289	32D212G040AB2A-DOB
A1C3	0180-1809	1	C:FXD ELECT 3400 UF +75-10% 25VDCW	56289	32D342G025AB2A-DOB
A1C4	0180-1807		C:FXD ELECT 290 UF +50-10% 200VDCW	56289	32D291F200AB2A-DOB
A1E1	1200-0043	1	INSULATOR:TSTR MOUNTING(TO-3)	71785	293011
A1F1	2110-0065	2	FUSE:0.375A 250V	75915	312.375
A1F2	2110-0002	2	FUSE:CARTRIDGE 2 AMP 3 AG	75915	312.002
A1F3	2110-0002		FUSE:CARTRIDGE 2 AMP 3 AG	75915	312.002
A1F4	2110-0065		FUSE:0.375A 250V	75915	312.375
A1MP1	5040-0446	2	FCOT:REAR, SHORT, NON-FILTERED	28480	5040-0446
A1MP2	5040-0446		FCOT:REAR, SHORT, NON-FILTERED	28480	5040-0446
A1MP3	00180-61103	1	TRANSISTOR:HEAT SINK RH	28480	00180-61103
A1MP4	00180-61104	1	TRANSISTOR:HEAT SINK LH	28480	00180-61104
A1MP5	00182-00205	1	PANEL:REAR, LVPS	28480	00182-00205
A1MP6			NOT ASSIGNED		
A1MP7	00182-24701	4	SPACER:LVPS	28480	00182-24701
A1MP8	00182-61201	1	BRACKET ASSY:TRANSFORMER	28480	00182-61201
A1Q1	1854-0417	2	TSTR:SI NPN	28480	1854-0417
A1Q2	1854-0063	2	TSTR:SI NPN	80131	2N3055
A1Q3	1854-0063		TSTR:SI NPN	80131	2N3055
A1Q4	1854-0417		TSTR:SI NPN	28480	1854-0417
A1T1	0100 3401	1	TRANSFORMER:POWER	28480	0100 3401
A1XQ1	1200-0041	4	SOCKET:TRANSISTOR	71785	133-32-10-013
A1XQ2	1200-0041		SOCKET:TRANSISTOR	71785	133-32-10-013
A1XQ3	1200-0041		SOCKET:TRANSISTOR	71785	133-32-10-013
A1XQ4	1200-0041		SOCKET:TRANSISTOR	71785	133-32-10-013
A1A1	00184 66611	1	ASSY:LOW VOLTAGE RECTIFIER BOARD	28480	00184 66611
A1A1C1	0180 0091	1	C: FXD ELECT 10 UF +50-10% 100 VDCW	56289	30D106F100DC2 USM
A1A1CR1	1901 0028	4	DIODE: SILICON 0.75A 400PIV	04713	SR 1358 9
A1A1CR2	1901 0028		DIODE: SILICON 0.75A 400PIV	04713	SR 1358 9
A1A1CR3	1901 0028		DIODE: SILICON 0.75A 400PIV	04713	SR 1358 9
A1A1CR4	1901 0028		DIODE: SILICON 0.75A 400PIV	28480	SR 1358 9
A1A1CR5	1901-0028	8	DIODE:SILICON 0.75A 400PIV	04713	SR1358-9
A1A1CR6	1901-0028		DIODE:SILICON 0.75A 400PIV	04713	SR1358-9
A1A1CR7	1901-0028		DIODE:SILICON 0.75A 400PIV	04713	SR1358-9
A1A1CR8	1901-0028		DIODE:SILICON 0.75A 400PIV	04713	SR1358-9
A1A1CR9	1901-0415	8	DIODE:SILICON 50 PIV 3A	28480	1901-0415
A1A1CR10	1901-0415		DIODE:SILICON 50 PIV 3A	28480	1901-0415
A1A1CR11	1901-0415		DIODE:SILICON 50 PIV 3A	28480	1901-0415
A1A1CR12	1901-0415		DIODE:SILICON 50 PIV 3A	28480	1901-0415
A1A1CR13	1901-0415		DIODE:SILICON 50 PIV 3A	28480	1901-0415
A1A1CR14	1901-0415		DIODE:SILICON 50 PIV 3A	28480	1901-0415
A1A1CR15	1901-0415		DIODE:SILICON 50 PIV 3A	28480	1901-0415
A1A1CR16	1901-0415		DIODE:SILICON 50 PIV 3A	28480	1901-0415
A1A1CR17	1901-0028		DIODE:SILICON 0.75A 400PIV	04713	SR1358-9
A1A1CR18	1901-0028		DIODE:SILICON 0.75A 400PIV	04713	SR1358-9
A1A1CR19	1901-0028		DIODE:SILICON 0.75A 400PIV	04713	SR1358-9
A1A1CR20	1901-0028		DIODE:SILICON 0.75A 400PIV	04713	SR1358-9
A1A1CR21	1901-0045	4	DIODE:SILICON 0.75A 100PIV	04713	SR1358-7
A1A1CR22	1901-0045		DIODE:SILICON 0.75A 100PIV	04713	SR1358-7
A1A1R1	0757-0342	2	R:FXD MET FLM 100K OHM 1% 1/4W	28480	0757-0342
A1A1R2	0757-0342		R:FXD MET FLM 100K OHM 1% 1/4W	28480	0757-0342
A1A1R3	0760 0016		R: FXD MET OX 2700 OHM 2% 1W	28480	0760 0016
A1A1R4	0757 0060		R: FXD MET FLM 24.3K OHM 1% 1/2W	28480	0757 0060
A1A1VR1	1902 0597		DIODE: BREAKDOWN 56.2V 5% 1W	28480	1902 0597
A1A2	00184 66609	1	ASSY:LOW VOLTAGE REGULATOR BOARD	28480	00184 66609
A1A2C1	0140 0176	1	C: FXD MICA 100 PF 2%	28480	0140 0176
A1A2C2	0180-0269	1	C:FXD ELECT 1.0 UF +50-10% 150VDCW	56289	300105F150BA2-DSM
A1A2C3	0180-0089	4	C:FXD AL ELECT 10 UF +50-10% 150VDCW	56289	30D106F150DD2-DSM
A1A2C4	0160-0161	3	C:FXD MY 0.01 UF 10% 200VDCW	56289	192P10392-PTS
A1A2C5	0180-0058	2	C:FXD AL ELECT 50 UF +75-10% 25VDCW	56289	30D506G025CC2-DSM
A1A2C6	0160-0040	3	C:FXD MY 0.047 UF 10% 200VDCW	56289	192P47392-PTS
A1A2C7	0180-0058		C:FXD AL ELECT 50 UF +75-10% 25VDCW	56289	300506G025CC2-DSM
A1A2C8	0180 0069		C: FXD AL ELECT 50 UF +50-10% 150VDCW	56289	30D106F150DD2 DSM
A1A2CR1	1901-0040	18	DIODE:SILICON 30MA 30WV	07263	FDG1088
A1A2CR2	1901-0040		DIODE:SILICON 30MA 30WV	07263	FDG1088
A1A2CR3	1901-0026	6	DIODE:SILICON 0.75A 200PIV	04713	SR1358-8
A1A2CR4	1901-0040		DIODE:SILICON 30MA 30WV	07263	FDG1088
A1A2CR5	1901-0040		DIODE:SILICON 30MA 30WV	07263	FDG1088
A1A2CR6	1901-0040		DIODE:SILICON 30MA 30WV	07263	FDG1088
A1A2CR7	1901-0026		DIODE:SILICON 0.75A 200PIV	04713	SR1358-8
A1A2E1 E8	2110-0269	9	CLIP:FUSE 0.250" DIA	91506	6006-32CN
A1A2J3	1251-1633	1	CONNECTOR:PCB X 15) 15 CONTACT	71785	252-15-30-310
A1A2Q1	1854 0234	4	TSTR: SI NPN	80131	2N2140
A1A2Q2	1854-0071	15	TSTR:SI NPN(SELECTED FROM 2N3704)	28480	1854-0071
A1A2Q3	1854-0071		TSTR:SI NPN(SELECTED FROM 2N3704)	28480	1854-0071

See introduction to this section for ordering information

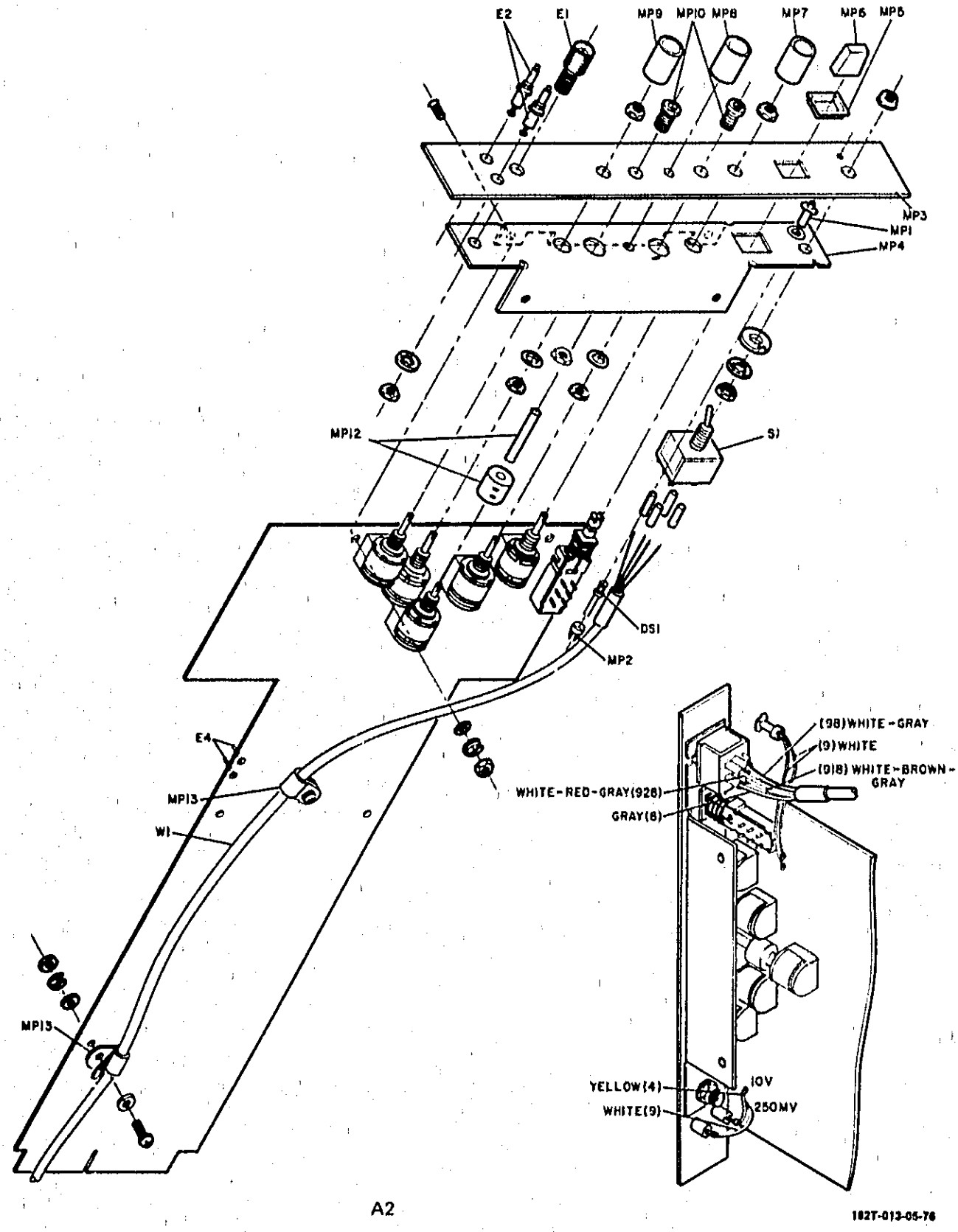

Figure 6-4. Control Module Mechanical Parts

Table 6-2. Replaceable Parts (Cont'd)

Reference Designat'on	HP Part Number	Qty	Description	Mfr Code	Mfr Part Number
A1A2Q4	1854-0071		TSTR:SI NPN(SELECTED FROM 2N3704)	28480	1854-0071
A1A2Q5	1854-0039		TSTR:SI NPN	80131	2N3053
A1A2Q6	1854-0071		TSTR:SI NPN(SELECTED FROM 2N3704)	28480	1854-0071
A1A2Q7	1854-0071		TSTR:SI NPN(SELECTED FROM 2N3704)	28480	1854-0071
A1A2Q8	1854-0071		TSTR:SI NPN(SELECTED FROM 2N3704)	28480	1854-0071
A1A2Q9	1854-0039		TSTR:SI NPN	80131	2N3053
A1A2Q10	1854-0071		TSTR:SI NPN(SELECTED FROM 2N3704)	28480	1854-0071
A1A2Q11	1854-0071		TSTR:SI NPN(SELECTED FROM 2N3704)	28480	1854-0071
A1A2Q12	1854-0071		TSTR:SI NPN(SELECTED FROM 2N3704)	28480	1854-0071
A1A2Q13	1854-0039		TSTR:SI NPN	80131	2N3053
A1A2Q14	1854-0071		TSTR:SI NPN(SELECTED FROM 2N3704)	28480	1854-0071
A1A2Q15	1854-0071		TSTR:SI NPN(SELECTED FROM 2N3704)	28480	1854-0071
A1A2Q16	1854-0071		TSTR:SI NPN(SELECTED FROM 2N3704)	28480	1854-0071
A1A2R1	0757-0713	1	R:FXD FLM 110 OHM 1% 1/4W	28480	0757-0713
A1A2R2	0757-0281	6	R:FXD MET FLM 2.74K OHM 1% 1/8W	28480	0757-0281
A1A2R3	0757-0465	2	R:FXD MET FLM 100K OHM 1% 1/8W	28480	0757-0465
A1A2R4	0812-0058	2	R:FXD WW 8.2 OHM 5% 2W	28480	0812-0058
A1A2R5	0757-0060	2	R:FXD MET FLM 24.3K OHM 1% 1/2W	28480	0757-0060
A1A2R6	0757-0060		R:FXD MET FLM 24.3K OHM 1% 1/2W	28480	0757-0060
A1A2R7	0757-0435	3	R:FXD FLM 3920 OHM 1% 1/8W	28480	0757-0435
A1A2R8	0757-0438	9	R:FXD MET FLM 5.11K OHM 1% 1/8W	28480	0757-0438
A1A2R9	0757-0044	3	R:FXD MET FLM 33.2K OHM 1% 1/2W	28480	0757-0044
A1A2R10	0757-0435		R:FXD FLM 3920 OHM 1% 1/8W	28480	0757-0435
A1A2R11	2100-1773	2	R:VAR WW 1K OHM 5% TYPE H 1W	28480	2100-1773
A1A2R12	0757-0767	4	R:FXD FLM 43.2K OHM 1% 1/4W	28480	0757-0767
A1A2R13	0811-1746	2	R:FXD WW 0.36 OHM 5% 2W	28480	0811-1746
A1A2R14	0757-0767		R:FXD FLM 43.2K OHM 1% 1/4W	28480	0757-0767
A1A2R15	0757-0438		R:FXD MET FLM 5.11K OHM 1% 1/8W	28480	0757-0438
A1A2R16	0757-0767		R:FXD FLM 43.2K OHM 1% 1/4W	28480	0757-0767
A1A2R17	0757-0431	4	R:FXD MET FLM 2.43K OHM 1% 1/8W	28480	0757-0431
A1A2R18	0757-0273	1	R:FXD MET FLM 3.01K OHM 1% 1/8W	28480	0757-0273
A1A2R19	0757-0283	5	R:FXD MET FLM 2.00K OHM 1% 1/8W	28480	0757-0283
A1A2R20	2100-1772	2	R:VAR WW 500 OHM 5% TYPE H 1W	28480	2100-1772
A1A2R21	0757-0438		R:FXD MET FLM 5.11K OHM 1% 1/8W	28480	0757-0438
A1A2R22	0811-1746		R:FXD WW 0.36 OHM 5% 2W	28480	0811-1746
A1A2R23	0757-0769	4	R:FXD FLM 51.1K OHM 1% 1/4W	28480	0757-0769
A1A2R24	0757-0436	3	R:FXD MET FLM 4.32K OHM 1% 1/8W	28480	0757-0436
A1A2R25	0757-0430	1	R:FXD MET FLM 2.21K OHM 1% 1/8W	28480	0757-0430
A1A2R26	0757-0769		R:FXD FLM 51.1K OHM 1% 1/4W	28480	0757-0769
A1A2R27	0757-0281		R:FXD MET FLM 2.74K OHM 1% 1/8W	28480	0757-0281
A1A2R28	0757-0428	1	R:FXD MET FLM 1.62K OHM 1% 1/8W	28480	0757-0428
A1A2R29	2100-1772		R:VAR WW 500 OHM 5% TYPE H 1W	28480	2100-1772
A1A2R30	0757-0435		R:FXD FLM 3920 OHM 1% 1/8W	28480	0757-0435
A1A2R31	0757-0367	3	R:FXD MET FLM 100K OHM 1% 1/2W	28480	0757-0367
A1A2R32	0757-0281		R:FXD MET FLM 2.74K OHM 1% 1/8W	28480	0757-0281
A1A2R33	0812-0058		R:FXD WW 8.2 OHM 5% 2W	28480	0812-0058
A1A2R34	0757-0769		R:FXD FLM 51.1K OHM 1% 1/4W	28480	0757-0769
A1A2R35	0757-0766	2	R:FXD FLM 47.5K OHM 1% 1/4W	28480	0757-0768
A1A2R36	0757-0044		R:FXD MET FLM 33.2K OHM 1% 1/2W	28480	0757-0044
A1A2R37	0757-0367		R:FXD MET FLM 100K OHM 1% 1/2W	28480	0757-0367
A1A2R38	0757-0450	1	R:FXD MET FLM 22.1K OHM 1% 1/8W	28480	0757-0450
A1A2R39	0757-0280	5	R:FXD MET FLM 1K OHM 1% 1/8W	28480	0757-0280
A1A2R40	2100-1774	1	R:VAR WW 2K OHM 5% TYPE H 1W	28480	2100-1774
A1A2R41	0757-0766		R:FXD FLM 47.5K OHM 1% 1/4W	28480	0757-0768
A1A2R42	0687-5611	2	R:FXD COMP 560 OHM 10% 1/2W	01121	EB 5611
A1A2TP1	1251-0206	5	CONNECTOR:SOCKET 0.15 BDY DIA TEFLON	98291	SKT-400
A1A2TP2	1251-0206		CONNECTOR:SOCKET 0.15 BDY DIA TEFLON	98291	SKT-400
A1A2TP3	1251-0206		CONNECTOR:SOCKET 0.15 BDY DIA TEFLON	98291	SKT-400
A1A2TP4	1251-0206		CONNECTOR:SOCKET 0.15 BDY DIA TEFLON	98291	SKT-400
A1A2VR1	1902-3096	1	DIODE BREAKDOWN:5.23V 5% 400 MW	28480	1902-3096
A1A2VR2	1902-0767	1	DIODE:T.C. REFERENCE 1N938	04713	1N938
A2	00182 60038	1	ASSY:CONTROL MODULE	28480	00182 60038
A2C1	0180-0155	3	C:FXD ELECT 2.2 UF 20% 20VDCW	56289	150D225X0020A2-DYS
A2C2	0160-2961	2	C:FXD MICA 5825 PF 2% 300VDCW	04062	RDM20F(5825)G3C
A2C3	0160-2961		C:FXD MICA 5825 PF 2% 300VDCW	04062	RDM20F(5825)G3C
A2C4	0180-0085		C:FXD AL ELECT 10 UF +50-10% 150VDCW	56289	30D106F150DD2-DSM
A2C5	0180 1747		C:FXD ELECT 160UF 20% 15VDCW	28480	0180 1747
A2C6	0180 1747		C:FXD ELECT 160UF 20% 15VDCW	28480	0180 1747
A2C7	0160 4079		C: FXD MY 1500 PF 4K VDCW	56289	430P152D-0
A2CR1	1901-0096	4	DIODE:SILICON 120V	01295	UG-88B
A2CR2	1901-0096		DIODE:SILICON 120V	01295	UG-88B
A2CR3	1901-0096		DIODE:SILICON 120V	01295	UG-88B
A2CR4	1901-0045		DIODE:SILICON 0.75A 100PIV	04713	SR135E-7
A2CR5	1901-0045		DIODE:SILICON 0.75A 100PIV	04713	SR135E-7
A2DS1	2140-0346	1	LAMP:INCANDESCENT 5V	71744	7210
A2E1	1510-0036	2	BINDING POST	28480	1510-0038
A2E2	0360-1698	1	TERMINAL:SOLDER STUD	17117	4338-87-0
A2E3	2110-0769		CLIP:FUSE 0.250" DIA	51506	6008-32CN

See introduction to this section for ordering information

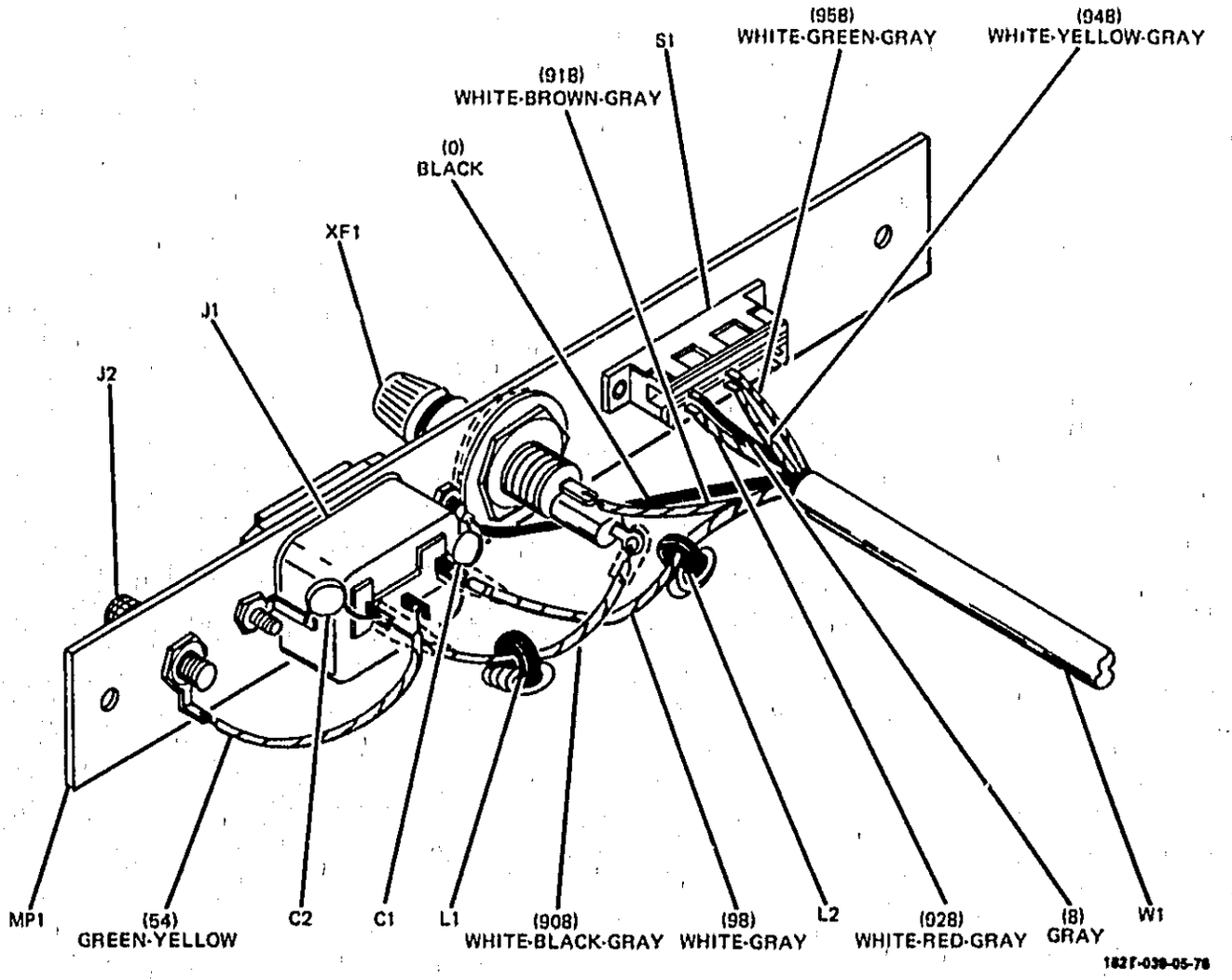

Figure 6-5. AC Power Module Parts Identification

Table 6-2. Replaceable Parts (Cont'd)

Reference Designation	HP Part Number	Qty	Description	Mfr Code	Mfr Part Number
A2E4	0360-1653	14	TERMINAL:PIN (EDA 260)	00000	OBD
A2E5	0362-0063	12	TERMINATION:CRIMP LUG FOR 0.04650 PIN	00000	OBD
A2E6	0362-0064	3	TERMINATION:CRIMP LUG	91506	2611225-14
A2L1	9140-0115	1	COIL:FXD RF 22 UH 10%	99800	2150-32
A2MP1	1450-0404	1	LENS:CLEAR	28480	1450-0404
A2MP2	00183-67701	1	HASE:PILOT LIGHT	28480	00183-67701
A2MP3	00182 60204	1	PANEL:FRONT CONTROL (INCLUDES A2F2)	28480	00182 60204
A2MP4	00182-01210	1	BRACKET:CONTROL	28480	00182-01210
A2MP5	0370-0451	4	BEZEL:PUSHBUTTON KNOB BLK NYLON	28480	0370-0451
A2MP6	0370-0450	1	KNOB:PUSHBUTTON SWITCH, BLK	71590	352305
A2MP7	00182-67401	3	KNOB ASSY:ARROW	28480	00182-67401
A2MP8	00182 67402		KNOB ASSY:ARROW	28480	00182 67402
A2MP9	00182-67403	1	KNOB ASSY:OFF	28480	00182-67403
A2MP10	1490-0968	1	BUSHING:POTENTIOMETER 1/4-32 EXT THRD	00000	OBD
A2MP11			NOT ASSIGNED		
A2MP12	00180 23201	1	COUPLER:FOCUS	28480	00180 23201
A2MP13	1400-0024	3	CLAMP,CABLE NYLON 1/4 DIA	71616	CPC-1953-4A
A2Q1	1854-0234	2	TSTR:SI NPN	80131	2N3440
A2Q2	1854-0234		TSTR:SI NPN	80131	2N3440
A2Q3	1854-0053	1	TSTR:SI NPN	80131	2N2218
A2R1	0757-0453	1	R:FXD MET FLM 30.1K OHM 1% 1/8W	28480	0757-0453
A2R2	2100-2917	1	R:VAR WW 50K OHM 20% 1/2W	28480	2100-2917
A2R3	0698-3158	2	R:FXD MET FLM 23.7K OHM 1% 1/8W	28480	0698-3158
A2R4	2100-2031	1	R:VAR 50K OHM 10% LIN 1/2W	28480	2100-2031
A2R5	0757-0454	1	R:FXD MET FLM 33.2K OHM 1% 1/8W	28480	0757-0454
A2R6	0757-0460	1	R:FXD MET FLM 61.9K OHM 1% 1/8W	28480	0757-0460
A2R7	0757-0456	1	R:FXD MET FLM 43.2K OHM 1% 1/8W	28480	0757-0456
A2R8	2100-3002	2	R:VAR 10K OHM	28480	2100-3002
A2R9	0757-0468	4	R:FXD FLM 130K OHM 1% 1/8W	28480	0757-0468
A2R10	0683-0275	4	R:FXD COMP 2.7 OHM 5% 1/4W	01121	CB 2705
A2R11	0757-0283		R:FXD MET FLM 2.00K OHM 1% 1/8W	28480	0757-0283
A2R12	0757-0407	6	R:FXD MET FLM 200 OHM 1% 1/8W	28480	0757-0407
A2R13	0757-0190	1	R:FXD MET FLM 20K OHM 1% 1/2W	28480	0757-0190
A2R14	0761-0006	1	R:FXD MET OX 10K OHM 5% 1W	28480	0761-0006
A2R15	0757-0468		R:FXD FLM 130K OHM 1% 1/8W	28480	0757-0468
A2R16	0757-0468		R:FXD FLM 130K OHM 1% 1/8W	28480	0757-0468
A2R17	0698-5421	1	R:FXD MET FLM 17.82K OHM 0.1% 1/2W	28480	0698-5421
A2R18	0698-5419	1	R:FXD FLM 1.95K OHM 0.1% 1/8W	28480	0698-5419
A2R19	0698-5416	1	R:FXD FLM 50 OHM 0.1% 1/8W	28480	0698-5416
A2R20	2100-3002		R:VAR 10K OHM	28480	2100-3002
A2R21	2100-3001	1	R:VAR 5 MEGOHM	28480	2100-3001
A2R22	0698 6580	1	R:FXD FLM 16.25 MEGOHM 5% 1W	28480	0698 6580
A2R23	2100-3003	1	R:VAR 5K OHM	28480	2100-3003
A2R24	0757 0281		R:FXD MET FLM 2740 OHM 1% 1/8W	28480	0757 0281
A2R25	0684-3901	1	R:FXD COMP 39 OHM 10% 1/4W	01121	CB 3901
A2S1	3101-1568	1	SWITCH:TOGGLE DPDT	09353	7318J
A2S2	3101-1374	1	SWITCH:PUSHBUTTON DPDT	28480	3101-1374
A2VR1	1902 00401	1	DIODE	04713	SC10039 06
A2W1	00182 61605	1	CABLE ASSY: (INCLUDES E5 AND E6)	28480	00182-61605
A3	00182 60019	1	ASSY:INTERCONNECT MODULE	28480	00182 60019
A3E1	0360-1653		TERMINAL:PIN (EDA 260)	00000	OBD
A3A1	00182-66517	1	ASSY:MOTHER BOARD	28480	00182-66517
A3J1	1251-0137	1	CONNECTOR:PC 32 CONTACT	02660	26-4200-325
A3J2	1251-2572	1	CONNECTOR:PC EDGE 22 FORK CONTACT	95354	91-6922-0702-00
A3J4	1251-0213	3	CONNECTOR:PC EDGE 15 CONTACT	95354	91-6915-1700-00
A3J5	1251-0213		CONNECTOR:PC EDGE 15 CONTACT	95354	91-6915-1700-00
A3J6	1251-0213		CONNECTOR:PC EDGE 15 CONTACT	95354	91-6915-1700-00
A3MP1	00182-01204	1	BRACKET:MOTHER BOARD	28480	00182-01204
A3MP2	1400-0024		CLAMP,CABLE NYLON 1/4 DIA	71616	CPC-1953-4A
A3MP3	0400 0010	1	GROMMET:VINYL 0.250" I.D.	00000	OBD
A3MP4	00182-00605	1	SHIELD:A.C.	28480	00182-00605
A3W1	00182-61609	1	CABLE ASSY:COAX	28480	00182-61609
A3W2	00180 61807	1	CABLE ASSY:SWEEP OUT	28480	00180 61807
A4	00182 60039	1	ASSY:AC POWER	28480	00182 60039
A4C1	0160 0196	2	C:FXD CER 1000 PF +-20% 250VDCW	56289	19C251A1 CDH
A4C2	0160 0196		C:FXD CER 1000 PF +-20% 250VDCW	56289	19C251A1 CDH
A4E1			NOT ASSIGNED		
A4E2	0362-0063		TERMINATION:CRIMP LUG FOR 0.04650 PIN	00000	OBD
A4F1	2110 0006	1	FUSE:CARTRIDGE 1.6 AMP 125V	71400	MDL 1.6
A4F2			NOT ASSIGNED		
A4J1	1251-2357	1	SOCKET:3-PIN MALE POWER RECEPTACLE	82389	EAC-301
A4J2	1510-0036		BINDING POST	28480	1510-0039
A4L1	9170-0613	1	COIL:CORE, TOROID, GREEN	72656	CF-102-H
A4MP1	00182 60206	1	PANEL ASSY:REAR	28480	00182 60206
A4MP2			NOT ASSIGNED		
A4MP3			NOT ASSIGNED		

See introduction to this section for ordering information

Table 6-2. Replaceable Parts (Cont'd)

Reference Designation	HP Part Number	Qty	Description	Mfr Code	Mfr Part Number
A4FP4			NOT ASSIGNED		
A4S1	3101-1237	1	SWITCH:SLIDE DPDT	82389	11A-1243
A4W1	00182-61604	1	CABLE ASSY:LINE 1	28480	00182-61604
A4XF1	1400-0084	2	FUSEHOLDER:EXTRACTOR POST TYPE	75915	342014
A4XF2			NOT ASSIGNED		
A5	00182 60035	1	ASSY:HORIZONTAL AMPLIFIER MODULE (See figure 6-7.)	28480	00182 60035
A5A1	00182 66618	1	ASSY:HORIZONTAL AMPLIFIER (See figure 6-7 for A5 parts not included with A5A1).	28480	00182 66618
A5C1	0160-0162	10	CAPFXD MY 0.022 UF 10% 200VDCW	56289	192P22392-PTS
A5C2	0160-0162		CAPFXD MY 0.022 UF 10% 200VDCW	56289	192P22392-PTS
A5C3	0180-0197	4	CAPFXD ELECT 2.2 UF 10% 20VDCW	56289	150D225X9020A2-DYS
A5C4	0180-0197		CAPFXD ELECT 2.2 UF 10% 20VDCW	56289	150D225X9020A2-DYS
A5C5	0160-0162		CAPFXD MY 0.022 UF 10% 200VDCW	56289	192P22392-PTS
A5C6	0160-0161		CAPFXD MY 0.01 UF 10% 200VDCW	56289	192P10392-PTS
A5C7	0160-0168	3	CAPFXD MY 0.1 UF 10% 200VDCW	56289	192P10492-PTS
A5C8	0170-0022	1	CAPFXD MY 0.10UF 20% 600VDCW	09134	TYPE 24
A5C9	0121-0060	1	CAPVAR CER 2-6 PF NPO	72982	538-011 A 2-6
A5C10	0160-2250	1	CAPFXD CER 5.1 PF 500VDCW	72982	301-000-C0H0-510F
A5C11	0160-2201	1	CAPFXD MICA 51 PF 5%	72136	RDM15E510J1C
A5C12	0131-0004	1	CAPVAR MICA 16-150 PF 175VDCW	72136	T51410-3
A5C13	0160-2020	2	CAPFXD MICA 910 PF 5% 100VDCW	00853	RDM15F911J1S
A5C14	0160-0162		CAPFXD MY 0.022 UF 10% 200VDCW	56289	192P22392-PTS
A5C15	0160-2020		CAPFXD MICA 910 PF 5% 100VDCW	00853	RDM15F911J1S
A5C16	0160-0162		CAPFXD MY 0.022 UF 10% 200VDCW	56289	192P22392-PTS
A5C17	0160-0162		CAPFXD MY 0.022 UF 10% 200VDCW	56289	192P22392-PTS
A5C18	0180-0197		CAPFXD ELECT 2.2 UF 10% 20VDCW	56289	150D225X9020A2-DYS
A5C19	0180-0197		CAPFXD ELECT 2.2 UF 10% 20VDCW	56289	150D225X9020A2-DYS
A5C20			NOT ASSIGNED		
A5C21	0132-0007	3	CAPVAR POLY 0.7 TO 3.0 PF 350VDCW	72982	535-033-48
A5C22	0160-0162		CAPFXD MY 0.022 UF 10% 200VDCW	56289	192P22392-PTS
A5C23	0170-0040		CAPFXD MY 0.047 UF 10% 200VDCW	56289	192P47392-PTS
A5C24	0132-0007		CAPVAR POLY 0.7 TO 3.0 PF 350VDCW	72982	535-033-48
A5C25	0160-2225	1	CAPFXD CER 0.75 PF 500VDCW	72982	301-000-C0K0-75R0
A5C26	0170-0040		CAPFXD MY 0.047 UF 10% 200VDCW	56289	192P47392-PTS
A5C27	0160-0162		CAPFXD MY 0.022 UF 10% 200VDCW	56289	192P22392-PTS
A5C28	0132-0007		CAPVAR POLY 0.7 TO 3.0 PF 350VDCW	72982	535-033-48
A5CR1	1901-0040		DIODE:SILICON 30MA 30WV	07263	FDG1088
A5CR2	1901-0040		DIODE:SILICON 30MA 30WV	07263	FDG1088
A5CR3	1901-0040		DIODE:SILICON 30MA 30WV	07263	FDG1088
A5CR4	5080-0464	4	DIODE:SILICON 30 200M	28480	5080-0464
A5CR5	1901 0040		DIODE:SILICON 30 MA 30 WV	07263	FDG 1088
A5CR6	1901 0040		DIODE:SILICON 30 MA 30 WV	07263	FDG 1088
A5CR7	1901-0040		DIODE:SILICON 30MA 30WV	07263	FDG1088
A5CR8	1901-0040		DIODE:SILICON 30MA 30WV	07263	FDG1088
A5CR9	1901 0040		DIODE:SILICON 30 MA 30 WV	07263	FDG 1088
A5CR10	1901 0040		DIODE:SILICON 30 MA 30 WV	07263	FDG 1088
A5CR11	1901-0040		DIODE:SILICON 30MA 30WV	07263	FDG1088
A5E1	1251-2039	2	CONNECTOR:TEST POINT, CORD JACK	28480	1251-2039
A5E2	0360 1788		TERMINAL:PIN	28480	0360 1788
A5J1	1250-0083	6	CONNECTOR:BNC	02660	31-221-1020
A5L1	9140-0179	6	COIL/CHOKE 22.0 UH 10%	28480	9140-0179
A5L2	9140-0179		COIL/CHOKE 22.0 UH 10%	28480	9140-0179
A5L3	9140-0179		COIL/CHOKE 22.0 UH 10%	28480	9140-0179
A5L4	9170-0029	2	CORE:FERRITE BEAD	02114	56-390-65A2/4A
A5MP1	00182-00201	1	PANEL:FRONT, HORIZONTAL	28480	00182-00201
A5MP2	00182-01202	1	BRACKET:HORIZONTAL	28480	00182-01202
A5MP3	00182-67401		RACK ASSY:REAR	28480	00182-67401
A5MP4	00182-67404	1	RACK ASSY:REAR	28480	00182-67404
A5MP5	00182-67405	3	RACK ASSY:PUSHBUTTON	28480	00182-67405
A5MP6	0370-0451		BEZEL:PUSHBUTTON RAGB BLK NYLON	28480	0370-0451
A5MP7	1400-0325	1	CLAMP:CABLE 0.125" DIA	00000	ORD
A5MP8	1205-0063	3	HEAT SINK:SEMICONDUCTOR	05820	224-CP
A5Q1	1855-0062	1	TSTR:FET FET 30V	01295	2N1595
A5Q2	1854-0215	3	TSTR:SI NPN	80131	2N3904
A5Q3	1850-0158	1	TSTR:GE PNP	80131	2N2635
A5Q4	1854-0019	5	TSTR:SI NPN	28480	1854-0019
A5Q5	1854-0019		TSTR:SI NPN	28480	1854-0019
A5Q6	1854-0071		TSTR:SI NPN:SELECTED FROM 2N3904	28480	1854-0071
A5Q7	1854-0019		TSTR:SI NPN	28480	1854-0019
A5Q8	1853-0009	2	TSTR:SI PNP	28480	1853-0009
A5Q9	1854-0419	2	TSTR:SI NPN	04713	55657
A5Q10	1853-0038	3	TSTR:SI PNP	28480	1853-0038
A5Q11	1853-0009		TSTR:SI PNP	28480	1853-0009
A5Q12	1854-0419		TSTR:SI NPN	04713	55657
A5Q13	1853-0038		TSTR:SI PNP	28480	1853-0038
A5R1	0683-1011	2	RESFXD COMP 100 OHM 10% 1/4W	01121	CB 1011
A5R2	0683-0275		RESFXD COMP 2.7 OHM 5% 1/4W	01121	CB 2705
A5R3	0757-0388	1	RESFXD FILM 30.1 OHM 1% 1/8W	28480	0757-0388

See introduction to this section for ordering information

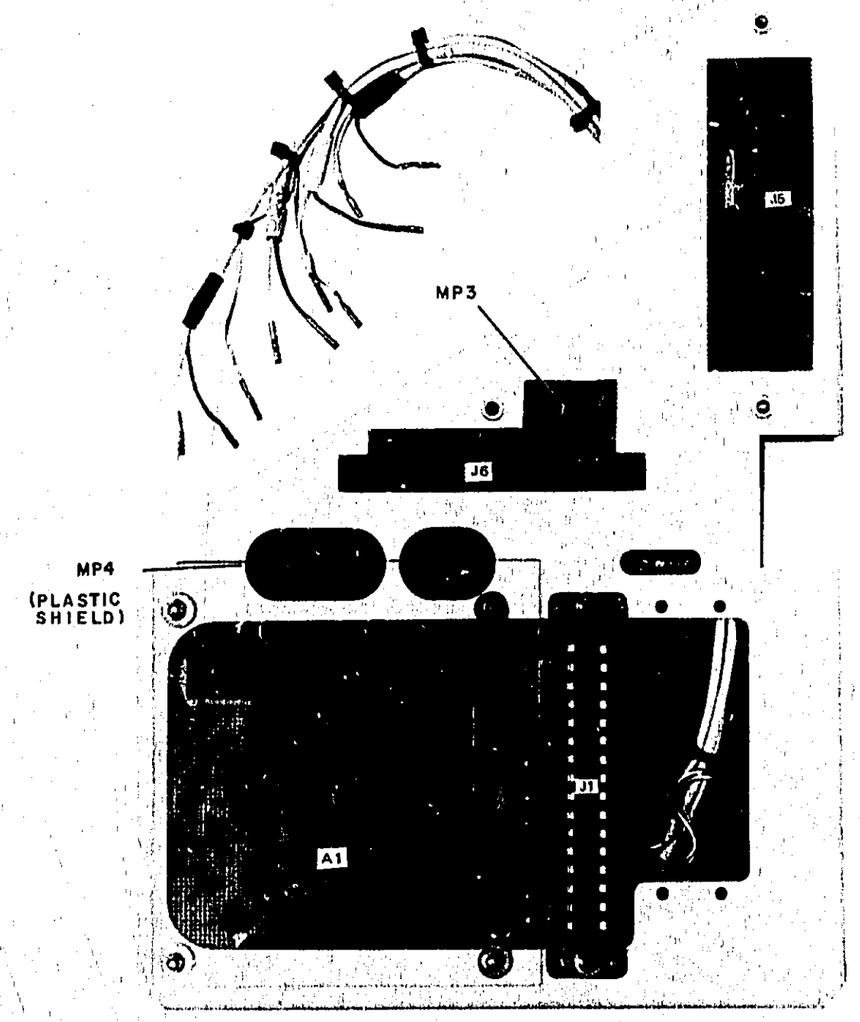

FRONT VIEW

A3

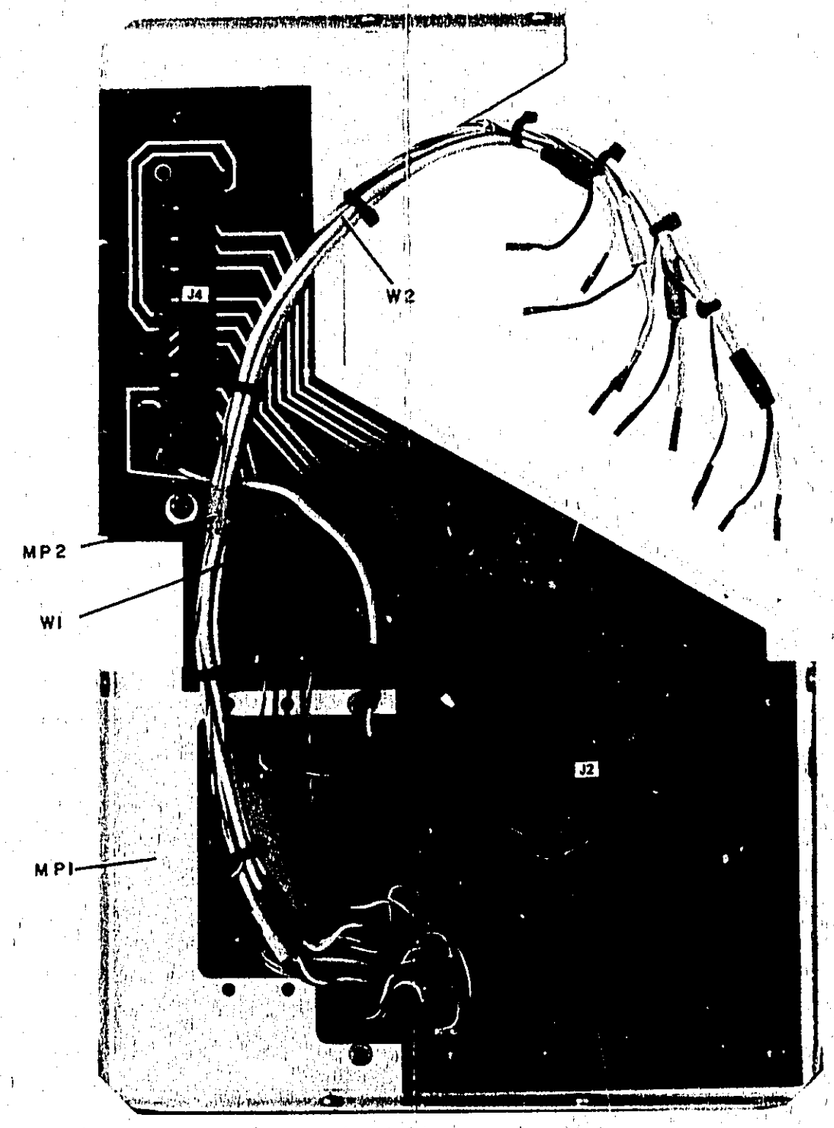

REAR VIEW

182T-015

Figure 6-6.
Interconnect Module Parts Identification

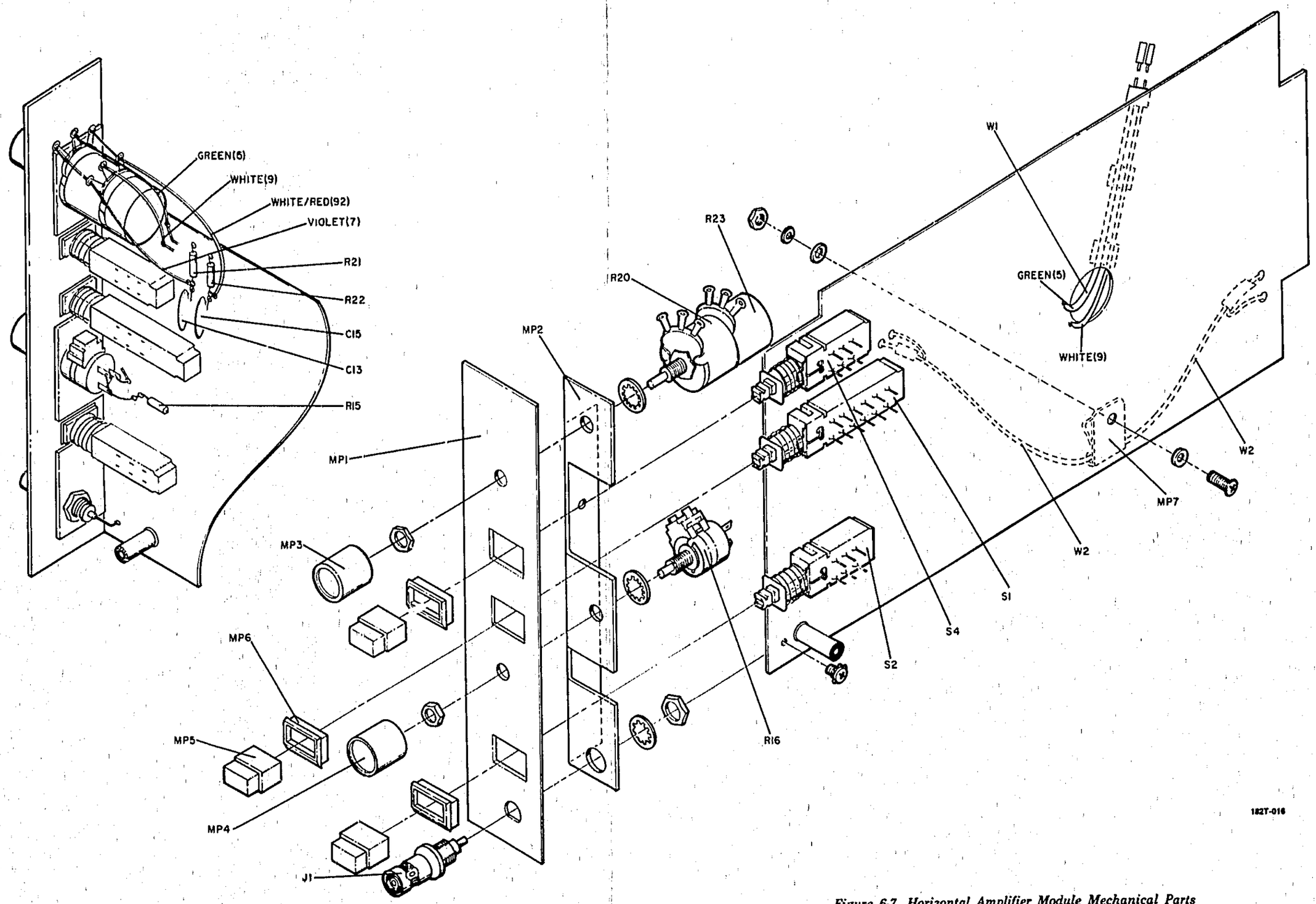

Figure 6-7. Horizontal Amplifier Module Mechanical Parts

Table 6-2. Replaceable Parts (Cont'd)

Reference Designation	HP Part Number	Qty	Description	Mfr Code	Mfr Part Number
A5R4	0757-0156	1	R:FXD MET FLM 1.5 MEGOHM 1% 1/2W	28480	0757-0156
A5R5	0727-0287	1	R:FXD CARBON 2 MEGOHM 1% 1/2W	28480	0727-0287
A5R6	0757-0344	2	R:FXD MET FLM 1.00 MEGOHM 1% 1/4W	28480	0757-0344
A5R7	0684-1011		R:FXD COMP 100 OHM 10% 1/4W	01121	CB 1011
A5R8	0757-0367		R:FXD MET FLM 100K OHM 1% 1/2W	28480	0757-0367
A5R9	0757-0416	4	R:FXD MET FLM 511 OHM 1% 1/8W	28480	0757-0416
A5R10	0757-0434	3	R:FXD MET FLM 3.65K OHM 1% 1/8W	28480	0757-0434
A5R11	2100-2030	2	R:VAR FLM 20K OHM 10% LIN 1/2W	28480	2100-2030
A5R12	0757-0447	1	R:FXD MET FLM 16.2K OHM 1% 1/8W	28480	0757-0447
A5R13	0757-0407		R:FXD MET FLM 200 OHM 1% 1/8W	28480	0757-0407
A5R14	0698-3647	1	R:FXD MET OX 15K OHM 5% 2W	28480	0698-3647
A5R15	0757-0426	2	R:FXD FLM 1.3K OHM 1% 1/8W	28480	0757-0426
A5R16	2100-2922	1	R:VAR COMP 15K OHM 20% 5 CCLOG 1/4W	28480	2100-2922
A5R17	0757-0774	1	R:FXD FLM 82.5K OHM 1% 1/4W	28480	0757-0774
A5R18	0757-0401	9	R:FXD MET FLM 100 OHM 1% 1/8W	28480	0757-0401
A5R19	0757-0792	1	R:FXD MET FLM 681K OHM 1% 1/4W	28480	0757-0792
A5R20	2100-2998	2	R:VAR CERMET 2 X 100K OHM 20% LIN	28480	2100-2998
A5R21	0757-0401		R:FXD MET FLM 100 OHM 1% 1/8W	28480	0757-0401
A5R22	0757-0401		R:FXD MET FLM 100 OHM 1% 1/8W	28480	0757-0401
A5R23	2100-2998		R:VAR CERMET 2 X 100K OHM 20% LIN	28480	2100-2998
A5R24	0757-0401		R:FXD MET FLM 100 OHM 1% 1/8W	28480	0757-0401
A5R25	0757-0771	1	R:FXD FLM 61.9K OHM 1% 1/4W	28480	0757-0771
A5R26	0757-0441	1	R:FXD MET FLM 8.25K OHM 1% 1/8W	28480	0757-0441
A5R27	0757-0283		R:FXD MET FLM 2.00K OHM 1% 1/8W	28480	0757-0283
A5R28	0757-0044		R:FXD MET FLM 33.2K OHM 1% 1/2W	28480	0757-0044
A5R29	0757-0741	2	R:FXD MET FLM 2.43K OHM 1%/1/4W	28480	0757-0741
A5R30	0757-0468		R:FXD FLM 130K OHM 1% 1/8W	28480	0757-0468
A5R31	0757-0440	1	R:FXD MET FLM 7.50K OHM 1% 1/8W	28480	0757-0440
A5R32	0757-0427	2	R:FXD MET FLM 1.5K OHM 1% 1/8W	28480	0757-0427
A5R33	0757-0741		R:FXD MET FLM 2.43K OHM 1%/1/4W	28480	0757-0741
A5R34	0757-0281		R:FXD MET FLM 2.74K OHM 1% 1/8W	28480	0757-0281
A5R35			NOT ASSIGNED		
A5R36	0757-0443	2	R:FXD MET FLM 11.0K OHM 1% 1/8W	28480	0757-0443
A5R37	0757-0434		R:FXD MET FLM 3.65K OHM 1% 1/8W	28480	0757-0434
A5R38	0757-0846	2	R:FXD MET FLM 22.1K [illegible] 1.0% 1/2W	28480	0757-0846
A5R39	0757-0413	2	R:FXD MET FLM 392 OHM 1% 1/8W	28480	0757-0413
A5R40	0757-0736	2	R:FXD MET FLM 1.50K OHM 1% 1/4W	28480	0757-0736
A5R42	0757-0407		R:FXD MET FLM 200 OHM 1% 1/8W	28480	0757-0407
A5R43	0757-0841	2	R:FXD MET FLM 12.1K OHM 1% 1/2W	28480	0757-0841
A5R44	2100-1770	1	R:VAR WW 100 OHM 5% TYPE H 1W	28480	2100-1770
A5R45	0757-0427		R:FXD MET FLM 1.5K OHM 1% 1/8W	28480	0757-0427
A5R46	2100-1773		R:VAR WW 1K OHM 5% TYPE H 1W	28480	2100-1773
A5R47	0757-0284	1	R:FXD MET FLM 150 OHM 1% 1/8W	28480	0757-0284
A5R48	0698-3416	2	R:FXD MET FLM 21.5K OHM 1% 1/2W	28480	0698-3416
A5R49	2100-1775	1	R:VAR WW 5K OHM 5% TYPE H 1W	28480	2100-1775
A5R50	0698-3416		R:FXD MET FLM 21.5K OHM 1% 1/2W	28480	0698-3416
A5R51	0757-0281		R:FXD MET FLM 2.74K OHM 1% 1/8W	28480	0757-0281
A5R52	0757-0443		R:FXD MET FLM 11.0K OHM 1% 1/8W	28480	0757-0443
A5R53	0757-0434		R:FXD MET FLM 3.65K OHM 1% 1/8W	28480	0757-0434
A5R54	0757-0413		R:FXD MET FLM 392 OHM 1% 1/8W	28480	0757-0413
A5R55	0757-0846		R:FXD MET FLM 22.1K OHM 1.0% 1/2W	28480	0757-0846
A5R56	0757-0736		R:FXD MET FLM 1.50K OHM 1% 1/4W	28480	0757-0736
A5R57	0757-0407		R:FXD MET FLM 200 OHM 1% 1/8W	28480	0757-0407
A5R58	0757-0448	1	R:FXD MET FLM 18.2K OHM 1% 1/8W	28480	0757-0448
A5R59	0757-0841		R:FXD MET FLM 12.1K OHM 1% 1/2W	28480	0757-0841
A5R60	0757-0416		R:FXD MET FLM 511 OHM 1% 1/8W	28480	0757-0416
A5R61	2100-2030		R:VAR FLM 20K OHM 10% LIN 1/2W	28480	2100-2030
A5R62	0757-0280		R:FXD MET FLM 1K OHM 1% 1/8W	28480	0757-0280
A5R63	0757-0426		R:FXD FLM 1.3K OHM 1% 1/8W	28480	0757-0426
A5S1	3101-1241	1	SWITCH:PUSHBUTTON 4PDT	71590	PB 1
A5S2	3101-0635	2	SWITCH:PUSHBUTTON 2P SINGLE STATION	71590	PB-1
A5S3	3101-0982	1	SWITCH:SLIDE SPSF 0.5A 125V	79727	GF124-0007
A5S4	3101-0635		SWITCH:PUSHBUTTON 2P SINGLE STATION	71590	PB-1
A5W1	00181-61606	1	CABLE ASSY:HORIZONTAL (INCL. E1 AND E2)	28480	00181-61606
A5W2	00182-61606	1	CABLE ASSY:COAX	28480	00182-61606
A6	00182-61102	1	ASSY:H.V. OSC. RECTIFIER BOARD	28480	00182-61102
A6C1	0160-0543	2	C:FXD CER 4700 PF 20% 4K VDCW	28480	0160-0543
A6C2	0160-0544	2	C:FXD CER 0.022 UF 20% [illegible] VDCW	28480	0160-0544
A6C3	0160-0543		C:FXD CER 4700 PF 20% 4K VDCW	28480	0160-0543
A6C4	0160-0544		C:FXD CER 0.022 UF 20% 4K VDCW	28480	0160-0544
A6C5	0160-2403	1	C:FXD CER 1500 PF 20% 5K VDCW	72982	828-025-X5R0-152M
A6C6	0160-2906		C:FXD CER 0.02 UF 20% 500VDCW		821 519 X5V 203M
A6CR1	1901-0683	2	DIODE:SI HV	28480	1901-0683
A6CR2	1901-0026		DIODE:SILICON 0.75A 200PIV	04713	SR1358-8
A6CR3	1901-0026		DIODE:SILICON 0.75A 200PIV	04713	SR1358-8
A6CR4	1901-0683		DIODE:SI HV	28480	1901-0683

See introduction to this section for ordering information

Table 6-2. Replaceable Parts (Cont'd)

Reference Designation	HP Part Number	Qty	Description	Mfr Code	Mfr Part Number
A6CR5	1901-0490	1	DIODE:SI 3000 PIV	28480	1901-0490
A6CR6	1901-0696		DIODE:SILICON 120V	01295	UG-888
A6E1	0360-1653		TERMINAL:PIN (COA 260)	00000	OBD
A6R1	0687-2231	1	R:FXD COMP 22K OHM 10% 1/2W	01121	EB 2231
A6R2	2100-1618	1	R:VAR FLM 1 MEGOHM 20% LIN 1/2W	28480	2100-1618
A6R3	0757-0145	1	R:FXD MET FLM 750K OHM 1% 1/4W	28480	0757-0145
A6R4	0698-8018	2	R:FXD FLM 30 MEGOHM 1% 3W	28480	0698-8018
A6R5	0757-0344		R:FXD MET FLM 1.00 MEGOHM 1% 1/4W	28480	0757-0344
A6R6	0687-2221	1	R:FXD COMP 2200 OHM 10% 1/2W	01121	EB 2221
A6R7	0687-1531	1	R:FXD COMP 15K OHM 10% 1/2W	01121	EB 1531
A6R8	0698-5353	1	R:FXD FLM 8.25 MEGOHM 5% 1W	28480	0698-5353
A6R9	0698-8018		R:FXD FLM 30 MEGOHM 1% 3W	28480	0698-8018
A6T1			N.S.R. PART OF A6		
A6TP1	1251-0206		CONNECTOR:SOCKET 0.15 BDY DIA TEFLON	98291	SKT-400
A7	00182-66515	1	ASSY:GATE AMPLIFIER BOARD	28480	00182-66515
A7C1	0160-0207	1	C:FXD MYLAR 0.01UF 5% 200VDCW	28480	0160-0207
A7C2	0160-2261	1	C:FXD CER 15 PF 5% 500VDCW	72982	301-NPO-15 PF
A7C3	0150-0093	1	C:FXD CER 0.01 UF +80-20% 100VDCW	72982	801-K800011
A7C4	0160-2200	1	C:FXD MICA 43 PF 5%	72136	RDM15E430J3C
A7C5	0160-0162		C:FXD MY 0.022 UF 10% 200VDCW	56289	192P22392-PTS
A7C6	0121-0407	1	C:VAR TRIMMER 0.7-3.0 PF	72982	536-016
A7C7	0150-0029	1	C:FXD TI 1 PF 10% 500VDCW	78488	TYPE GA
A7C8	0121-0168	1	C:VAR TEFLON 0.25-1.50 PF 600VDCW	28480	0121-0168
A7C9	0150-0029	1	C:FXD TI 1 PF 10% 500VDCW	78488	TYPE GA
A7C10	0160-0168		C:FXD MY 0.1 UF 10% 200VDCW	56289	192P10492-PTS
A7C11	0160-0168		C:FXD MY 0.1 UF 10% 200VDCW	56289	192P10492-PTS
A7C12	0160-0162		C:FXD MY 0.022 UF 10% 200VDCW	56289	192P22392-PTS
A7C13	0180-0089		C:FXD AL ELECT 10 UF +50-10% 150VDCW	56289	300106F150D.2-DSM
A7C14	0180-0161	1	C:FXD ELECT 3.3 UF 20% 35VDCW	56289	150D335X0035R2-DYS
A7C15	0140-0204	1	C:FXD MICA 47 PF 5% NPO 500VDCW	14655	RDM15E470J5C
A7CR1	1901-0040		DIODE:SILICON 30MA 30WV	07263	FDG1088
A7CR2	1901-0040		DIODE:SILICON 30MA 30WV	07263	FDG1088
A7CR3	1901-0040		DIODE:SILICON 30MA 30WV	07263	FDG1088
A7CR4	1901-0635	1	DIODE: HYBRID HOT CARRIER	28480	1901-0635
A7CR5	1901-0040		DIODE:SILICON 30MA 30WV	07263	FDG1088
A7CR6	1901-0029	2	DIODE:SILICON 600 PIV	28480	1901-0029
A7CR7	1901-0029		DIODE:SILICON 600 PIV	28480	1901-0029
A7CR8	1901-0436	2	DIODE:SILICON 1600 PIV	28480	1901-0436
A7CR9	1901-0436		DIODE:SILICON 1600 PIV	28480	1901-0436
A7E1	0360-1653		TERMINAL:PIN (COA 260)	00000	OBD
A7L1	9140-0179		COIL/CHOKE 22.0 UH 10%	28480	9140-0179
A7L2	9170-0029		CORE:FERRITE BEAD	02114	56-590-65A2/4A
A7MP1	1205-0063		HEAT SINK:SEMICONDUCTOR	05820	224-CB
A7Q1	1854-0019		TSTR:SI NPN	28480	1854-0019
A7Q2	1853-0049	2	TSTR:SI PNP	28480	1853-0049
A7Q3	1853-0049		TSTR:SI PNP	28480	1853-0049
A7Q4	1854-0215		TSTR:SI NPN	80131	2N3904
A7Q5	1854-0092	1	TSTR:SI NPN	80131	2N3563
A7Q6	1854-0019		TSTR:SI NPN	28480	1854-0019
A7Q7	1853-0038		TSTR:SI PNP	28480	1853-0038
A7Q8	1854-0271	1	TSTR:SI NPN	28480	1854-0271
A7R1	0757-0401		R:FXD MET FLM 100 OHM 1% 1/8W	28480	0757-0401
A7R2	0757-0769		R:FXD FLM 51.1K OHM 1% 1/4W	28480	0757-0769
A7R3	0757-0433	1	R:FXD MET FLM 3.32K OHM 1% 1/8W	28480	0757-0433
A7R4	0757-0416		R:FXD MET FLM 511 OHM 1% 1/8W	28480	0757-0416
A7R5	0757-0442	1	R:FXD MET FLM 10.0K OHM 1% 1/8W	28480	0757-0442
A7R6	0757-0465		R:FXD MET FLM 100K OHM 1% 1/8W	28480	0757-0465
A7R7	0757-0274	1	R:FXD MET FLM 1.21K OHM 1% 1/8W	28480	0757-0274
A7R8	0757-0401		R:FXD MET FLM 100 OHM 1% 1/8W	28480	0757-0401
A7R9	0757-0419	1	R:FXD MET FLM 681 OHM 1% 1/8W	28480	0757-0419
A7R10	0757-1101		R:FXD MET FLM 360 OHM 1% 1/8W	28480	0757-1101
A7R11	0757-0438		R:FXD MET FLM 5.11K OHM 1% 1/8W	28480	0757-0438
A7R12	0757-0280		R:FXD MET FLM 1K OHM 1% 1/8W	28480	0757-0280
A7R13	0757-0407		R:FXD MET FLM 200 OHM 1% 1/8W	28480	0757-0407
A7R14	0757-0407		R:FXD MET FLM 200 OHM 1% 1/8W	28480	0757-0407
A7R15	0757-0281		R:FXD MET FLM 2.74K OHM 1% 1/8W	28480	0757-0281
A7R16	0757-0431		R:FXD MET FLM 2.43K OHM 1% 1/8W	28480	0757-0431
A7R17	0757-0437	1	R:FXD MET FLM 4750 OHM 1% 1/8W	28480	0757-0437
A7R18	0757-0461	1	R:FXD MET FLM 68.1K OHM 1% 1/8W	28480	0757-0461
A7R19	0757-0724	1	R:FXD FLM 392 OHM 1% 1/4W	28480	0757-0724
A7R20	0757-0727	1	R:FXD MET FLM 562 OHM 1% 1/4W	28480	0757-0727
A7R21	0757-0767		R:FXD FLM 43.2K OHM 1% 1/4W	28480	0757-0767
A7R22	0757-0840	1	R:FXD MET FLM 11.0K OHM 1% 1/2W	28480	0757-0840
A7R23	0757-0472	1	R:FXD MET FLM 200K OHM 1% 1/8W	28480	0757-0472
A7R24			NOT ASSIGNED		

See introduction to this section for ordering information

Table 6-2. Replaceable Parts (Cont'd)

Reference Designation	HP Part Number	Qty	Description	Mfr Code	Mfr Part Number
A7R25	0757-0280		R:FXD MET FLM 1K OHM 1% 1/8W	28480	0757-0280
A7R26	0757-0760	1	R:FXD FLM 20K OHM 1% 1/4W	28480	0757-0760
A7R27	0757-0416		R:FXD MET FLM 511 OHM 1% 1/8W	28480	0757-0416
A7R28	0687-1011	1	R:FXD COMP 100 OHM 10% 1/2W	01121	EB 1011
A7R29	0761-0083	1	R:FXD MET OX 66K OHM 5% 1W	28480	0761-0083
A7R30	0757-0401		R:FXD MET FLM 100 OHM 1% 1/8W	28480	0757-0401
A7R31	0757-0401		R:FXD MET FLM 100 OHM 1% 1/8W	28480	0757-0401
A7R32	0757-0401		R:FXD MET FLM 100 OHM 1% 1/8W	28480	0757-0401
A8	00180-66551	1	ASSY:SWEEP GATE OUTPUT BOARD	28480	00180-66551
A8C1	0160-3446		C:FXD ELECT 220PF 10% 1K 20VDCW	28480	0160-3446
A8E1	0360-1514	12	PIN:SQUARE(TEST POINTS)	28480	0360-1514
A8R1	0757-0438	2	R:FXD MET FLM 5.11K OHM 1% 1/8W	28480	0757-0438
A8R2	0757-0438		R:FXD MET FLM 5.11K OHM 1% 1/8W	28480	0757-0438
A8R3	0757-0438		R:FXD MET FLM 5.11K OHM 1% [illegible]W	28480	0757-0438
A9	00182-60029	1	ASSY:CRT MODULE		00182-60029
A9L1	01701-66001	1	COIL:ALIGNMENT, ORTHOGONALITY "Y"	28480	01701-66001
A9L2	5060-0435	1	COIL:ALIGNMENT Z AXIS	28480	5060-0435
A9MP1	00182-60602	1	SHIELD ASSY:CRT	28480	00182-60602
A9MP2	0400-0009		GROMMET:VINYL, FOR 1/4" DIA HOLE	01538	6250
A9MP3	7120-0638		LABEL	28480	7120-0638
A9MP4	1400-0798		CLAMP:CRT OLIVE	28480	1400-0798
A9MP5	1400-0026		CLAMP:HOSE	66296	36H
A9MP6	0380-1019		SPACER	00000	OBD
A9MP7	0380-1019		SPACER	00000	OBD
A9MP8	0460-0778	1	FOAM STRIP	28480	0460-0778
A10	00182-66513	1	ASSY:H.V. REGULATOR BOARD	28480	00182-66513
A10C1	0160-0097	1	C:FXD TANT. 47 UF 10% 35VDCW	56289	150D476X9035S2-DYS
A10C2	0160-3453	2	C:FXD CER 0.05 UF +80-20% 100VDCW	56289	C023A101L5032525-CDH
A10C3	0180-0100	2	C:FXD ELECT 4.7 UF 10% 35VDCW	56289	150D475X9035B2-DYS
A10C4	0160-2903	1	C:FXD CER 0.05 UF 20% 500VDCW	56289	1233C24A2-CDH
A10C5	0160-3443		C:FXD CER 0.1 UF +80-20% 50VDCW	72982	8131-050-651-104Z
A10C6	0180-0100		C:FXD ELECT 4.7 UF 10% 35VDCW	56289	150D475X9035B2-DYS
A10C7	0160-3453		C:FXD CER 0.05 UF +80-20% 100VDCW	56289	C023A101L5032525-CDH
A10C8	0160-3452	2	C: FXD CER 0.02 UF 20% 100VDCW	56289	C03B101H203MS25 CO
A10CR1	1901-0040		DIODE:SILICON 30MA 30WV	07263	FDG1088
A10CR2	1901-0040		DIODE:SILICON 30MA 30WV	07263	FDG1088
A10CR3	1901-0040		DIODE:SILICON 30MA 30WV	07263	FDG1088
A10CR4	1901-0026		DIODE:SILICON 0.75A 200PIV	04713	SR1358-8
A10CR5	1901-0026		DIODE:SILICON 0.75A 200PIV	04713	SR1358-8
A10E1	1251-0613	1	CONNECTOR:R 6 P, 5 MALE POST CONTACT	28480	1251-0613
A10E2	0360-1653		TERMINAL:PIN (CDA 260)	00000	OBD
A10Q1	1855-0057	1	TSTR:SI FET N-CHANNEL	28480	1855-0057
A10Q2	1854-0215		TSTR:SI NPN	80131	2N3904
A10Q3	1853-0034	1	TSTR:SI PNP(SELECTED FROM 2N3251)	28480	1853-0034
A10R1	0811-1671	1	R:FXD WW 2.7 OHM 5% 2W	28480	0811-1671
A10R2	0699-0002	2	R:FXD COMP 6.8 OHM 10% 1/2W	01121	EB 68G1
A10R3	2100-2650	1	R:VAR FLM 200K OHM 10% LIN 1/2W	28480	2100-2650
A10R4	0757-0138	1	R:FXD MET FLM 909K OHM 2% 1/2W	28480	0757-0138
A10R5	0684-2731	3	R:FXD COMP 27K OHM 10% 1/4W	01121	CB 2731
A10R6	0684-2731		R:FXD COMP 27K OHM 10% 1/4W	01121	CB 2731
A10R7	0684-2721	1	R:FXD COMP 2700 OHM 10% 1/4W	01121	CB 2721
A10R8	0684-4721	1	R:FXD COMP 4700 OHM 10% 1/4W	01121	CB 4721
A10R9	0687-5611		R:FXD COMP 560 OHM 10% 1/2W	01121	EB 5611
A10R10	0699-0002		R:FXD COMP 6.8 OHM 10% 1/2W	01121	EB 68G1
A10R11	0684-2731		R:FXD COMP 27K OHM 10% 1/4W	01121	CB 2731
A10R12	0687-1011	1	R:FXD COMP 100 OHM 10% 1/2W	01121	EB 1011
A10R13	0684-1021	1	R:FXD COMP 1000 OHM 10% 1/4W	01121	CB 1021

See introduction to this section for ordering information

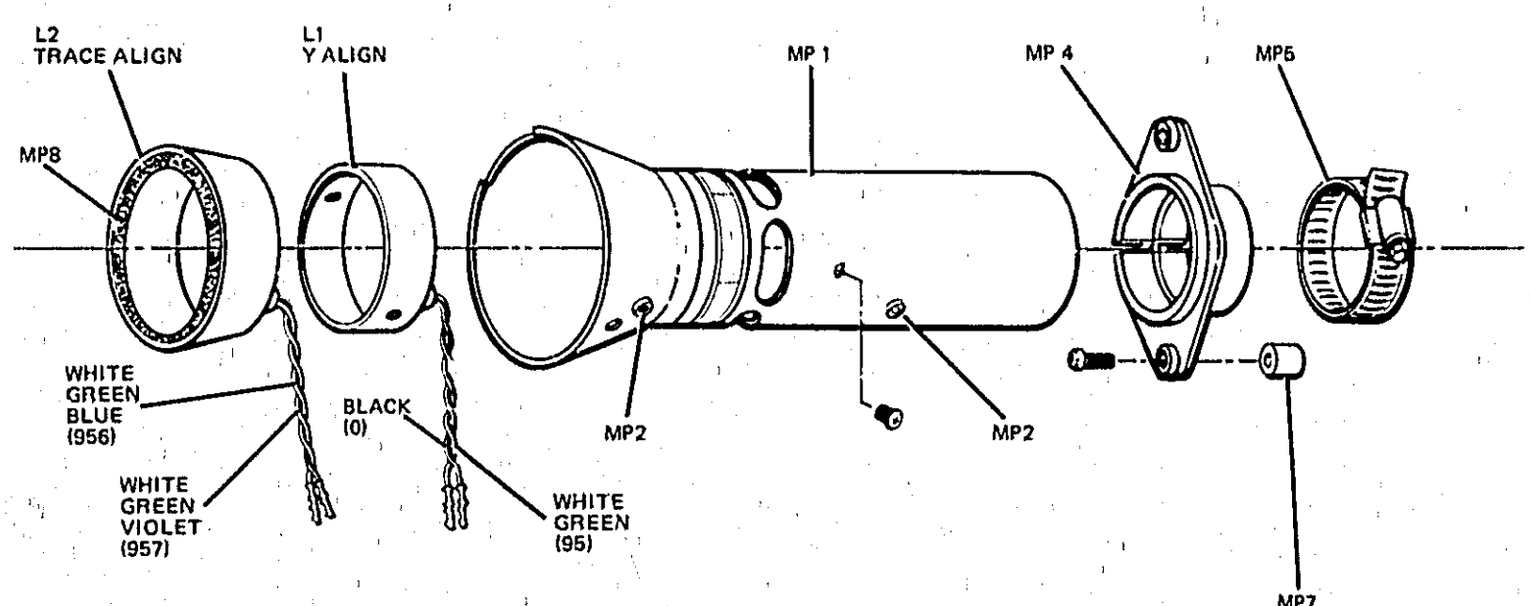

A9

182T-017-05-76

Figure 6-8. CRT Module Parts Identification

Table 6-3. List of Manufacturers' Codes

MFR NO.	MANUFACTURER NAME	ADDRESS	ZIP CODE
00000	U.S.A. COMMON	ANY SUPPLIER OF U.S.A.	
00853	SANGAMO ELECTRIC CO.,PICKENS DIV.	PICKENS, S.C.	29671
01121	ALLEN BRADLEY CO.	MILWAUKEE, WIS.	53204
01295	TEXAS INSTRUMENTS INC. SEMICONDUCTOR COMPONENTS DIV.	DALLAS, TEX.	75231
01538	SMALL PARTS INC.	COSTA MESA, CALIF.	92626
02114	FERROXCUBE CORP.	SAUGERTIES, N.Y.	12477
02660	AMPHENOL CORP.	BROADVIEW, ILL.	60153
04713	MOTOROLA SEMICONDUCTOR PROD.INC.	PHOENIX, ARIZ.	85008
05820	WAKEFIELD ENGINEERING INC.	WAKEFIELD, MASS.	01880
07263	FAIRCHILD CAMERA & INST. CORP. SEMICONDUCTOR DIV.	MOUNTAIN VIEW, CALIF.	94040
08717	SLEAN CO. THE	SUN VALLEY, CALIF.	91352
09134	TEXAS CAPACITOR CO. INC.	HOUSTON, TEX.	77042
09353	C & K COMPONENTS INC.	NEWTON, MASS.	02158
12881	METEK CORP.	EDISON, N.J.	08817
14655	CORNELL DUBILIER ELECT. DIV.FEDERAL PACIFIC ELECT. CO.	NEWARK, N.J.	07105
17117	ELECTRONIC MOLDING CORP.	PAWTUCKET, R.I.	02860
22264	MOLEX PROD. CO.	DOWNERS GROVE, ILL.	60515
28480	HEWLETT-PACKARD CO. CORPORATE HQ	YOUR NEAREST HP OFFICE	
56289	SPRAGUE ELECTRIC CO.	N. ADAMS, MASS.	01247
59730	THOMAS & BETTS CO. THE	ELIZABETH, N.J.	07207
66295	WITTER MFG. CO.	CHICAGO, ILL.	60623
71400	BUSSMANN MFG. DIV. HC GRAW-EDISON CO.	ST. LOUIS, MO.	63017
71590	GLOBE UNION INC. CENTRALAB DIV.	MILWAUKEE, WISC.	53201
71616	COMMERCIAL PLASTICS CO.	MUNDELEIN, ILL.	60060
71744	CHICAGO MINIATURE LAMP WORKS	CHICAGO, ILL.	60640
71785	CINCH MFG. CO. DIV TRW INC.	ELK GROVE VILLAGE, ILL.	
72136	ELECTRO MOTIVE MFG. CO. INC.	WILLIMANTIC, CONN.	06226
72656	INDIANA GENERAL CORP. ELECTRONIC DIV.	KEASBEY, N.J.	08832
72825	EBY HUGH H. INC.	PHILADELPHIA, PA.	19144
72982	ERIE TECHNOLOGICAL PROD. INC.	ERIE, PA.	16512
75915	LITTELFUSE INC.	DES PLAINES, ILL.	60016
78488	STACKPOLE CARBON CO.	ST. MARYS, PA.	15857
79727	CONTINENTAL-WIRT ELECTRONICS CORP.	WARMINSTER, PA.	18974
80131	ELECTRONIC INDUSTRIES ASSOCIATION	WASHINGTON D.C.	20006
82389	SWITCHCRAFT INC.	CHICAGO, ILL.	60630
91506	AUGAT INC.	ATTLEBORO, MASS.	02703
91636	MALCO MFG. CO. INC.	CHICAGO, ILL.	60650
95354	METCOE MFG. CO.	ROLLING MEADOWS, ILL.	60008
95987	WECHESSER CO. INC.	CHICAGO, ILL.	60641
98291	SEALECTRO CORP.	MAMARONECK, N.Y.	10544
99800	DELEVAN ELECTRONICS CORP.	E. AURORA, N.Y.	14052

See introduction to this section for ordering information

SECTION VII

MANUAL CHANGES AND OPTIONS

7-1. INTRODUCTION.

7-2. This section contains information required to backdate this manual for a specific instrument. A description of standard options is also in this section.

7-3. MANUAL CHANGES.

7-4. This manual applies directly to the instrument having the same serial prefix shown on the manual title page. If the serial prefix of the instrument is not the same as the one on the title page, find your serial prefix in table 7-1 and make the changes to the manual that are listed for that serial prefix. When making changes listed in table 7-1, make the change with the highest number first. Example: if backdating changes 1, 2, and 3 are required for your serial prefix, do change 3 first, then change 2, and finally change 1. If the serial prefix of the instrument is not listed either in the title page or in table 7-1, refer to an enclosed MANUAL CHANGES sheet for updating information. Also, if a MANUAL CHANGES sheet is supplied, make all indicated ERRATA corrections.

Table 7-1. Manual Changes

Serial Prefix	Make Changes
1507A	2, 1
1515A	2

7-5. STANDARD OPTIONS.

7-6. Standard options are modifications installed on HP instruments at the factory and are available on request. Contact the nearest Hewlett-Packard Sales/Service Office for detailed information concerning standard options. The following option is available for the Model 182T:

OPTION 003. This option is a standard instrument set at the factory for operation from a power source of 100 or 200 Vac ±10%, 48 to 440 Hz, 200 VA maximum. Make the following changes to table 6-2 for Option 003:

A1: Change HP Part No. and Mfr Part No. to 00182-60014.
A1T1: Change HP Part No. and Mfr Part No. to 9100-3249.

CHANGE 1

Figure 6-4,
Relabel small cylindrical part as MP11. MP12 describes only large cylinderical part.

Table 6-2,
A2: Change HP Part No. and Mfr Part No. to 00182-60030.
A2MP3: Change HP Part No. and Mfr Part No. to 00182-60203.
A2MP8: Change HP Part No. and Mfr Part No. to 00182-67401.
Add: A2MP11; HP Part No. 00182-23706; Qty 1; SHAFT EXTENDER; Mfr Code 28480; Mfr Part No. 00182-23706.
A2MP12: Change to HP Part No. 1490-0841; Qty 1; COUPLING:SHAFT 0.127" ID; Mfr Code 28480; Mfr Part No. 1490-0841.

CHANGE 2

Figure 6-5,
Replace with figure 7-1.

Table 6-2,
A4: Change HP Part No. and Mfr Part No. to 00182-60004.
A4C1 and A4C2: Change to HP Part No. 0160-3484; C:FXD CER FEED-THRU 1000 PF 20% 1000V; Mfr Code 72982; Mfr Part No. 2432-009X5U102M.
Add: A4E1; HP Part No. 0400-0018; Qty 1; GROMMET:CHANNEL U-SHAPED; Mfr Code 95987; Mfr Part No. WG-101.
Add: A4F2: HP Part No. 2110-0020; Qty 1; FUSE: 0.8A 250V SLOW-BLOW; Mfr Code 75915; Mfr Part No. 313.800S.
A4MP1: Change HP Part No. and Mfr Part No. to 00182-60201.
Add: A4MP2; HP Part No. 00182-00601; Qty 1; SHIELD:LINE FILTER; Mfr Code 28480; Mfr Part No. 00182-00601.
Add: A4MP3; HP Part No. 00182-01246; Qty 2; BRACKET:GROUND LINE FILTER; Mfr Code 28480; Mfr Part No. 00180-01246.
Add: A4MP4; HP Part No. 00182-01209; Qty 1; BRACKET:LINE FILTER; Mfr Code 28480; Mfr Part No. 00182-01209
Add: A4XF2; HP Part No. 1400-0084; FUSE-HOLDER:EXTRACTOR POST TYPE; Mfr Code 75915; Mfr Part No. 342014.

Schematic 2,
Add: A4F2 0.8A fuse as shown below:

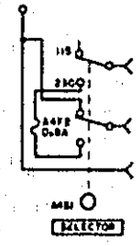

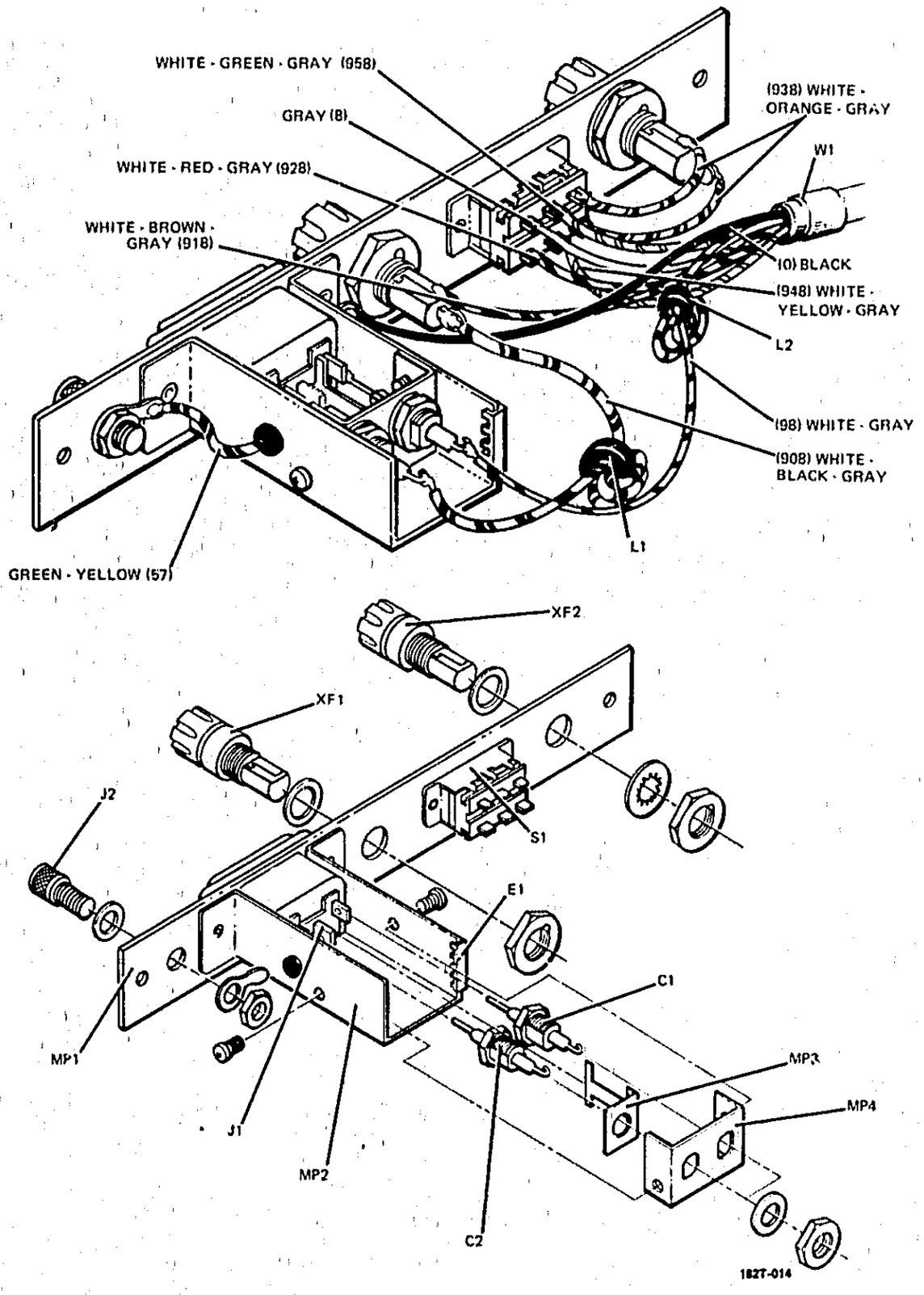

Figure 7-1. AC Power Module Parts Identification

SECTION VIII

SCHEMATICS AND TROUBLESHOOTING

8-1. INTRODUCTION.

8-2. This section contains schematics, repair and replacement information, component identification illustrations, and troubleshooting and repair information. Table 8-1 defines symbols and conventions used on the schematics. The overall block diagram is located in Section IV.

8-3. SCHEMATICS.

8-4. The schematics are drawn to show the electronic function of the circuit and instrument. A given schematic may include all or part of several assemblies. Schematics also include dc voltages and waveforms. Information explaining the symbols and conventions used in these schematics is in table 8-1. Voltage measurement conditions applicable to each schematic are shown next to the schematic.

8-5. Each schematic is identified by a number. The number of the schematic is located in the lower right hand corner near the figure number and title. These numbers are used to cross reference signal connections that begin on one schematic and continue on another. When a circuit leaves a schematic it is identified with the number of the schematic on which it is continued. Both schematics have the same circuit identification information such as voltage, function or circuit connection.

8-6. REFERENCE DESIGNATIONS.

8-7. The unit system of reference designations used in this manual is in accordance with provisions of the ANSI Standard Reference Designations for Electrical and Electronic Parts and Equipments dated March 1, 1968. Minor variations due to design and manufacturing practices not specifically covered by the standard may be noted.

8-8. Each electrical component is identified by a class letter and number. This letter-number combination is the basic reference designation for each component. Components that are separately replaceable and are part of an assembly have, in addition to the basic designation, a prefix designation indicating the assembly on which the component is physically located. Components not located on an assembly will have only the basic designation and are listed in the replaceable parts list (Section VI) under chassis parts.

8-9. All components located on an etched circuit board should be prefixed with the assembly number assigned to the board (e.g. resistor R23 on assembly A3 is referred to as A3R23). There may also be an R23 on several other assemblies, but the assembly designation will always be different (A2R23, A1R23, etc.).

8-10. COMPONENT LOCATION.

8-11. All adjustments are shown in Section V, and mechanical and miscellaneous electrical parts are shown on exploded view drawings in Section VI. For ready reference, circuit assembly photographs are placed adjacent to the associated schematics.

8-12. Circuit assembly photographs are subdivided by a grid, and components within each subdivision are indexed to a location table below the photograph. A component can be located on the photograph by first referring to the table. However, reference designations are not complete on the assembly photographs. For the complete reference designation, prefix the assembly designation given in the photograph to each component designation.

8-13. TROUBLESHOOTING.

8-14. The most important prerequisite for successful troubleshooting in understanding how the instrument operates and correct usage of controls.

8-15. Improper control settings can cause apparent malfunctions. Refer to the operating instructions in Section III for a complete explanation of each control's function along with typical operating instructions if in doubt. Use the controls as a guide to help isolate a trouble to a specific area of the instrument.

8-16. Troubleshooting is easier if more than one symptom of a trouble is evident. Observe the instrument, and note all indications of faulty operation. If symptoms indicate more than one trouble, treat each problem individually and locate one trouble at a time. Follow the procedure presented here, and refer to other areas of information in this manual if necessary.

8-17. Make a thorough check of instrument performance. A complete procedure is given in Section V, and forms are included to record results. A trouble, such as incorrect vertical gain or sweep speed, may be due to lack of calibration.

8-18. PRELIMINARY CHECKOUT. To help isolate malfunctions, perform the following checkout procedure:

Table 8-1. Schematic Notes

Refer to MIL-STD-15-1A and MIL-STD-806 for schematic symbols not listed in this table.

ETCHED CIRCUIT BOARD

FRONT-PANEL MARKING

REAR-PANEL MARKING

FRONT-PANEL CONTROL

SCREWDRIVER ADJUSTMENT

TP1 ELECTRICAL TEST POINT TP (WITH NUMBER)

3 WAVEFORM TEST POINT (WITH NUMBER)

SINGLE-PIN CONNECTOR ON BOARD

A PIN OF A PLUG-IN BOARD (WITH LETTER OR NUMBER)

COAXIAL CABLE CONNECTED TO SNAP-ON JACK

COAXIAL CABLE CONNECTED DIRECTLY TO BOARD

MAIN SIGNAL PATH

PRIMARY FEEDBACK PATH

SECONDARY FEEDBACK PATH

P/O PART OF

NC NO CONNECTION

CW CLOCKWISE END OF VARIABLE RESISTOR

G D S FIELD-EFFECT TRANSISTOR (P-TYPE BASE)

G D S FIELD-EFFECT TRANSISTOR (N-TYPE BASE)

BREAKDOWN DIODE (VOLTAGE REGULATOR)

TUNNEL DIODE

STEP-RECOVERY DIODE

CIRCUITS OR COMPONENTS DRAWN WITH DASHED LINES (PHANTOM) SHOW FUNCTION ONLY AND ARE NOT INTENDED TO BE COMPLETE. THE CIRCUIT OR COMPONENT IS SHOWN IN DETAIL ON ANOTHER SCHEMATIC.

6 SIGNAL REFERENCE

2 SCHEMATIC REFERENCE

(925) WIRE COLORS ARE GIVEN BY NUMBERS IN PARENTHESIS USING THE RESISTOR COLOR CODE

[(925) IS WHT-RED-GRN]

0 - BLACK	5 - GREEN
1 - BROWN	6 - BLUE
2 - RED	7 - VIOLET
3 - ORANGE	8 - GRAY
4 - YELLOW	9 - WHITE

* OPTIMUM VALUE SELECTED AT FACTORY, TYPICAL VALUE SHOWN; PART MAY HAVE BEEN OMITTED.

UNLESS OTHERWISE INDICATED:
RESISTANCE IN OHMS,
CAPACITANCE IN PICOFARADS
INDUCTANCE IN MICROHENRIES

a. Check for improper control settings (refer to Section III).

b. Check for proper operation of accessory equipment.

c. Visually inspect instrument for loose wire and cable connections. Check wiring to all board assemblies for proper connections.

d. Visually inspect for burned, broken, or chafed wires; charred or discolored components; and any other indication of physical damage.

e. Check for proper power supply voltages and determine that fuses are not open.

8-19. DETAILED CHECKOUT. If the trouble cannot be located using the preliminary checkout procedures, a detailed check of the circuits will be necessary. Troubleshooting charts, waveforms, and voltages are provided to help in locating problem areas and components. The troubleshooting charts and waveforms are to be used to isolate the problem to a specific area. The voltages can then be used to locate the faulty component within the problem area.

CAUTION

When taking waveform or dc voltage measurements, use extreme care to avoid shorting supply voltages or components.

8-20. Dc voltages are shown on the schematics near active components such as transistors. Waveforms are also placed on the schematics at points which will assist in determining proper circuit operation. As an aid to locating measurement points, a small dot is etched on the circuit board next to the emitter lead of each transistor, the source lead of FET's, the cathode end of diodes, and the positive end of electrolytic capacitors. Use these points to assist in voltage and resistance measurement tests and as guidance in properly replacing components.

8-21. TROUBLESHOOTING TABLES. Troubleshooting tips are given in several tables. Before doing the checks, be sure that the symptom is valid by checking control settings. For example, what may at first appear as no display may really be a no sweep problem.

8-22. REPAIR AND REPLACEMENT. The following paragraphs contain recommended procedures for repair and replacement of defective components. A complete list of components, with Hewlett-Packard part numbers and ordering information, is in Section VI. Contact the nearest HP Sales/Service Office listed at the rear of this manual if satisfactory repair or operation cannot be achieved.

8-23. SERVICING ETCHED CIRCUIT BOARDS. Etched circuit boards in this instrument have components mounted on one side of the board, conductive surfaces on both sides, and plated-through component mounting holes. Hewlett-Packard Service Note M-20E contains useful information on servicing etched circuit boards. Some important considerations are as follows:

a. Use a 37 to 47.5 watt chisel tip soldering iron with a tip diameter of 1/16 to 1/8 inch, and a small diameter rosin core solder.

b. Components may be removed by placing the soldering iron on the component leads on either side of the board and pulling the component straight away from the board. If heat is applied to the component side of the board, greater care is required to avoid damage to the components, especially semiconductors. Heat damage may be minimized by gripping the lead with long-nosed pliers between the soldering iron and the component, thereby forming a heat sink.

c. If a component is obviously damaged or faulty, clip the leads close to the component and then unsolder the leads from the board.

d. Large components, such as potentiometers, may be removed by rotating the soldering iron from lead to lead and applying steady pressure to lift the part free. The alternative is to clip the leads of the damaged part and remove them individually.

e. Excessive heat or force will destroy the laminate bond between the metal plated surface (conductor) and the board. If this problem should occur, the lifted conductor may be cemented down with a small amount of quick-drying acetate-base cement having good insulating properties. Another method of repair is to solder a section of good conducting wire along the damaged area.

f. Before replacing a component, heat the remaining solder in the component hole and clean it out with a desoldering tool. Sharp pointed metallic tools are not recommended since they may loosen eyelets in boards or remove plating from the inside of holes on plated-through etched circuit boards.

g. Tin and shape replacemnt component leads to fit existing holes.

h. Install the replacement component in the same position as the original.

8-24. SEMICONDUCTOR REPLACEMENT. Semiconductor devices are available in a wide variety of shapes and sizes. This can make it confusing to identify the leads. Examples of some of the most common configurations are shown in figure 8-1.

8-25. When removing a semiconductor, use a pair of long-nosed pliers as a heat sink between the device and the soldering iron. And, when replacing a semiconductor, ensure sufficient lead length to dissipate

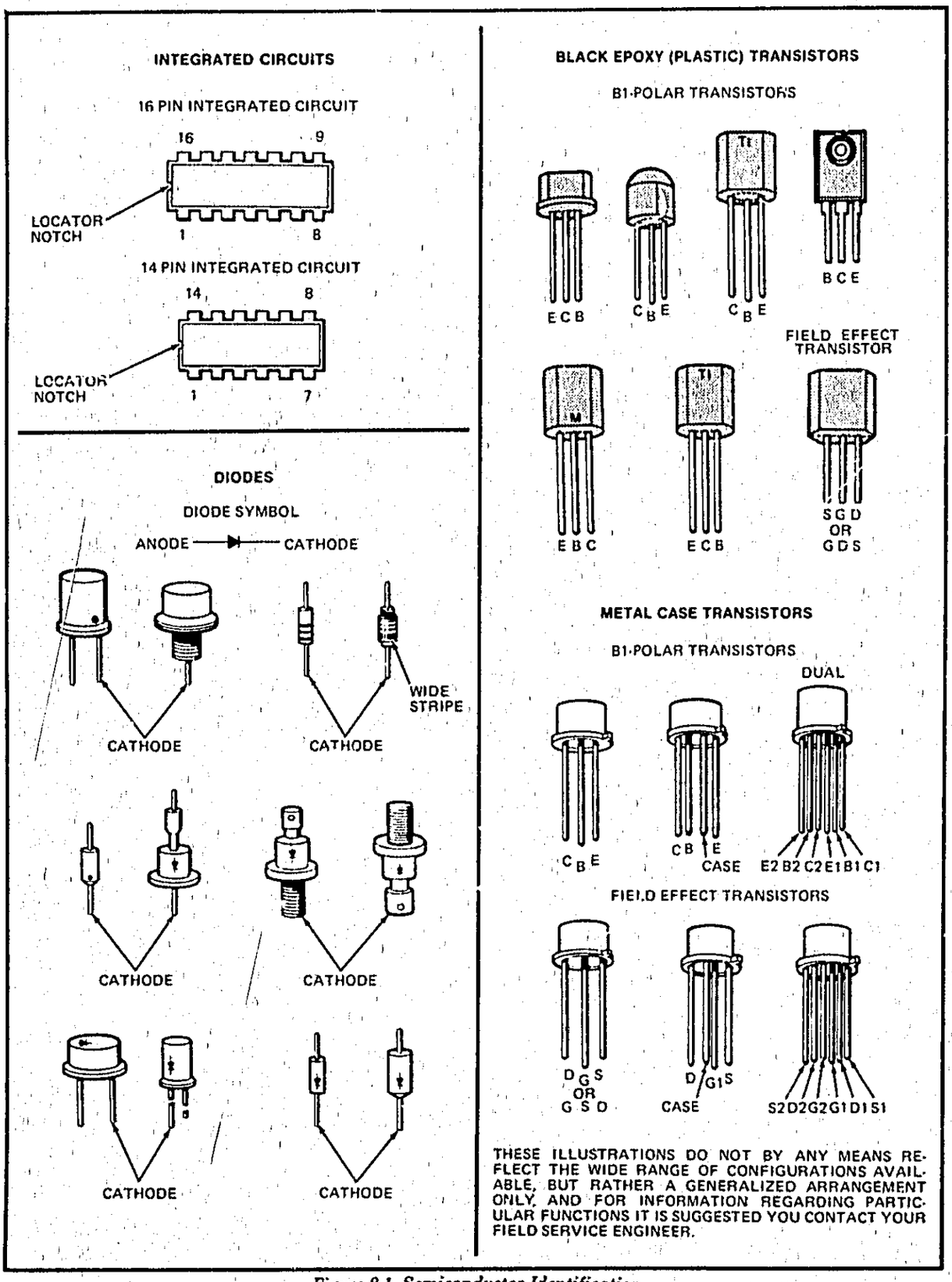

Figure 8-1. Semiconductor Identification

soldering heat by using the same length of exposed lead used for the original part.

8-26. DETAILED TROUBLESHOOTING.

8-27. The following troubleshooting tips are categorized according to the various areas of the instrument. These tips can be helpful only after a trouble is localized to one of these areas. Read the theory of operation in Section IV to learn how a circuit should operate. If it appears necessary to calibrate the instrument, refer to Section V for the proper procedures.

8-28. LOW-VOLTAGE POWER SUPPLY. Fuses, test points for measuring regulated output voltages, and voltage adjustment controls are located on the low-voltage regulator assembly. Access to the assembly is obtained by removing the instrument rear panel. Each low-voltage supply is fused. The fuses are in series with the regulator transistors, and all regulated output power flows through the fuse for the respective supply.

8-29. Since the +100 V and —100 V supplies are current fold-back limited, and the +15 V and —12.6 V supplies are current limited, an open fuse generally indicates that trouble exists in the regulator portion of the supply. If a fuse is open, check the series regulator transistor, driver transistor, and comparator.

8-30. Troubleshooting the low-voltage supply is facilitated by removing the power supply from the oscilloscope. This will provide access to the power transformer, rectifiers, and filters. Removing the module also disconnects the power supply from all other circuits of the oscilloscope, thus confining the troubleshooting effort to the low-voltage supply. The procedure for removing the power supply module is explained later in this section of the manual.

WARNING

Lethal voltages are exposed when the power supply module is operated outside the oscilloscope mainframe.

8-31. The +100 V supply should be checked first, since all other supplies use it as a reference. Unregulated operation of all of the other supplies may be the result of a defective +100 V supply. Use the test points to monitor the regulated output of a supply. If the +100 V supply is defective, verify operation of the reference supply which is regulated by the 9-volt zener diode.

8-32. HIGH-VOLTAGE POWER SUPPLY AND REGULATOR.

WARNING

Lethal voltages are exposed when the oscilloscope is turned on with the high-voltage power supply cover removed. High-voltage power supply problems are usually indicated by no display, a display that is too bright, an arcing sound, slow trace shift or blooming, or sudden shifts in display intensity. Regulator problems may result in no high voltage or excessive high voltage.

8-33. If only one high-voltage output is missing, check the appropriate rectifier and filter circuit. If high voltage is present but not properly adjusted, refer to the high-voltage troubleshooting tables.

WARNING

The CRT post-accelerator lead may have a high voltage present even if the instrument has been turned off for a long time. Ground both CRT and H.V. Multiplier connections to discharge them.

8-34. If no high voltage is present, check the high-voltage oscillator circuitry. The oscillator supply voltage, unregulated +27 V, is fused by F3 on the regulator assembly. The oscillator frequency is approximately 40 kHz. With the High Voltage Multiplier output disconnected, (by disconnecting the CRT post-accelerator lead) the oscillator frequency should increase to approximately 50 kHz.

8-35. The CRT cathode and grid high-voltage leads can be disconnected by removing the CRT socket. This will further isolate the trouble. If it is determined that the H.V. Multiplier is faulty, it must be replaced as a complete unit, since it is a sealed assembly.

8-36. DISASSEMBLY INFORMATION.

8-37. COVER REMOVAL. The instrument has a two-piece cover. Remove the covers as follows:

a. Ensure that LINE power switch is OFF and disconnect power plug from line power source.

b. Release the three-quarter-turn fasteners located on each side of the instrument. The cover retainers will be completely free. Figure 8-2 shows the location of the fasteners.

c. Loosen two captive screws located on handle ends.

d. Remove top cover by expanding slightly and pulling away from instrument.

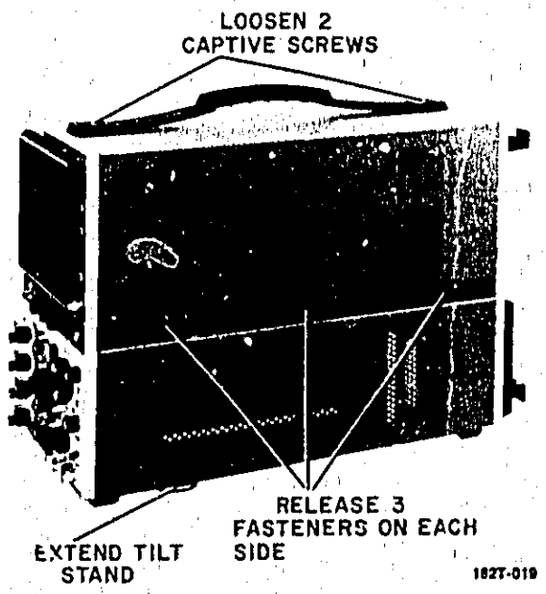

Figure 8-2. Cover Removal

e. Remove bottom cover by extending tilt stand, expanding and pulling away from instrument.

f. Remove rear access cover by releasing single-quarter-turn fastener.

8-38. POWER MODULE REMOVAL. The low-voltage power module includes the power transformer, low-voltage rectifier assembly, low-voltage regulator assembly, and the series regulators. The entire module is removable as a unit which can be further disassembled if desired.

8-39. To remove the power module, disconnect ac power input, remove the covers and proceed as follows:

a. Remove four screws located on bottom rear of instrument.

b. Return instruments to horizontal position and remove two rear screws. One screw is located on top of each series regulator heat sink. Do not remove screws holding rear feet to heat sink or screws located below rear feet.

c. Disconnect CRT filament lead connectors (brown wires) from rectifier assembly using long-nosed pliers and lifting straight up. (CRT filament leads may also be disconnected later, refer to step d.)

WARNING

Filament leads operate at —3150 volts when power is on.

d. Remove module by grasping filter capacitors on each side and pressing toward rear of instrument. If CRT filament leads were not previously disconnected, be careful to pull module only partially free. Then disconnect filament leads and remove module.

8-40. CONTROL ASSEMBLY REMOVAL. This assembly includes the calibrator, CRT controls, and LINE power switch. To remove the controls assembly, disconnect ac power input, remove the covers, and proceed as follows:

a. Disconnect five square-pin connections between cable located on the underside of the assembly and the Interconnect assembly circuit board.

b. Disconnect eight square-pin connections located on the top side of the assembly. Use a long-nosed pliers and pull connections straight off to remove. These consist of: CRT focus (two right-angle connections), trace alignment (two connections), CRT flood-gun (two connections), CRT mesh, (one connection), and ground (one connection).

c. Remove four screws from underside of control assembly. Two screws hold the assembly to the front casting frame and also hold the focus high-voltage shield in place. The other two screws are located approximately at the center of the assembly.

d. Grasp the assembly internal to the instrument and remove with a straight pull toward the front of the instrument. Do not remove by pulling on knobs. Be careful that square-pins located on top of the assembly do not catch on front casting frame.

8-41. AC POWER INPUT MODULE REMOVAL. The power input module contains the line power jack, line filter, fuse holders, and LINE SELECTOR switch. It may be partially removed for servicing or completely removed if necessary.

8-42. Partial removal is possible since the cable carrying ac line power is long enough to expose the components without disconnecting the cable. To release the module, disconnect ac power input and remove the two screws holding the panel in place. Pull the module to the rear of the instrument.

8-43. If complete removal is desired, either remove the low-voltage power module or open the upper rear panel. This exposes the ac line power cable connections to the Interconnect assembly. Then disconnect six square-pin connections from the cable to the Interconnect assembly circuit board. The module can now be completely removed from the oscilloscope.

8-44. SWEEP-GATE ASSEMBLY REMOVAL. The Sweep-gate amplifier is located on the upper rear panel of the instrument. It is exposed for servicing by removing four screws holding the rear panel to the rear casting frame. (Do not remove rear feet from panel.) If complete removal is desired, disconnect 12 square-pin connections to the assembly. Five BNC

connectors and one screw hold the circuit board to the rear panel.

8-45. GATE AMPLIFIER ASSEMBLY REMOVAL. Disconnect ac power input and remove the instrument top cover. Then proceed as follows:

a. Disconnect Gate Out coaxial cable (two square-pin connections) from rear of Gate Amplifier.

b. Remove two screws from rear casting frame.

c. Remove by pulling assembly back and pivoting connector end out of mainframe.

8-46. HORIZONTAL MODULE REMOVAL. To remove the Horizontal module, use the following procedure:

a. Disconnect ac power input and remove the instrument top cover.

b. Disconnect two horizontal deflection cable pin connections from CRT neck.

c. Remove two screws holding bottom of circuit board to oscilloscope frame and one screw located at top center of circuit board.

d. Remove one screw from front casting frame.

e. Slide module toward front of instrument to disconnect module and turn rear of module to outside of oscilloscope mainframe.

f. Bend horizontal deflection cable forward and flat against rear of module.

g. Carefully slide module toward front of instrument for removal.

h. When reinstalling, be certain that horizontal deflection cable is placed toward front of module before installing. After module is inserted, bend cable toward rear before making connection to oscilloscope connector.

8-47. CRT REMOVAL. Remove the CRT as follows:

WARNING

To prevent personal injury, always wear a face mask or safety goggles when handling the CRT. Wear protective gloves and handle carefully.

a. Disconnect ac power input and remove covers from instrument.

b. Disconnect CRT post-accelerator lead at connector mounted on H.V. module. Cable is permanently fastened to CRT. Completely discharge CRT and H.V. Multiplier connections by grounding both plug and jack.

WARNING

The CRT post-accelerator lead may have a high voltage present even if the instrument has been turned off for a long time. Ground both CRT and H.V. Multiplier connections to discharge.

c. Remove two screws holding CRT socket cover to rear panel.

d. Carefully remove CRT socket by gently prying it loose. If desired, the instrument top rear panel may be removed to facilitate socket removal.

e. Disconnect eight CRT neck pin connections. (see figure 8-20 for connection identifications.)

f. Remove four screws which hold the front bezel in place. These screws are removed from the rear of front casting frame and are located near each corner of the CRT.

g. Loosen circular clamp securing CRT shield to CRT neck.

h. Slide CRT forward out of shield to remove. Keep one hand on front face of CRT while using other to slide forward. Exercise care to prevent damage to neck pin connections.

8-48. HIGH-VOLTAGE MODULE REMOVAL. Assemblies in the H.V. mudule are separately removable. However, if it is desired to remove the module, first remove the CRT. Then proceed as follows:

WARNING

The CRT post-accelerator lead may have a high voltage present even if the instrument has been turned off for a long time. Ground both CRT and H.V. Multiplier connections to discharge.

a. Disconnect CRT post-accelerator lead at connector mounted on H.V. module. Cable is permanently fastened to CRT. Completely discharge CRT and H.V. Multiplier connections by grounding both plug and jack.

b. Remove cover from module by removing two screws.

c. Disconnect four square-pin connections, Gate Coax, Focus, Grid, and Cathode leads, located on rear of H.V. Oscillator and Rectifier assembly.

d. Disconnect five-pin connector located on rear of H.V. Regulator assembly.

e. Remove six screws holding module to mainframe top and side struts.

8-49. TROUBLESHOOTING PROCEDURE.

8-50. Table 8-2 through 8-6 provide a guide for troubleshooting the basic circuits in a logical manner. Set the Model 182T controls as follows and then proceed to table 8-2.

Power ..... ON
SCALE ..... OFF
INTENSITY ..... 1 - 2 o'clock position
FOCUS ..... As necessary
FIND BEAM ..... as required
Horizontal DISPLAY ..... EXT
Horizontal MAGNIFIER X1
Horizontal POSITION ..... Centered
Vertical POSITION ..... Centered
Vertical Input ..... None

Table 8-2. Troubleshooting Tree

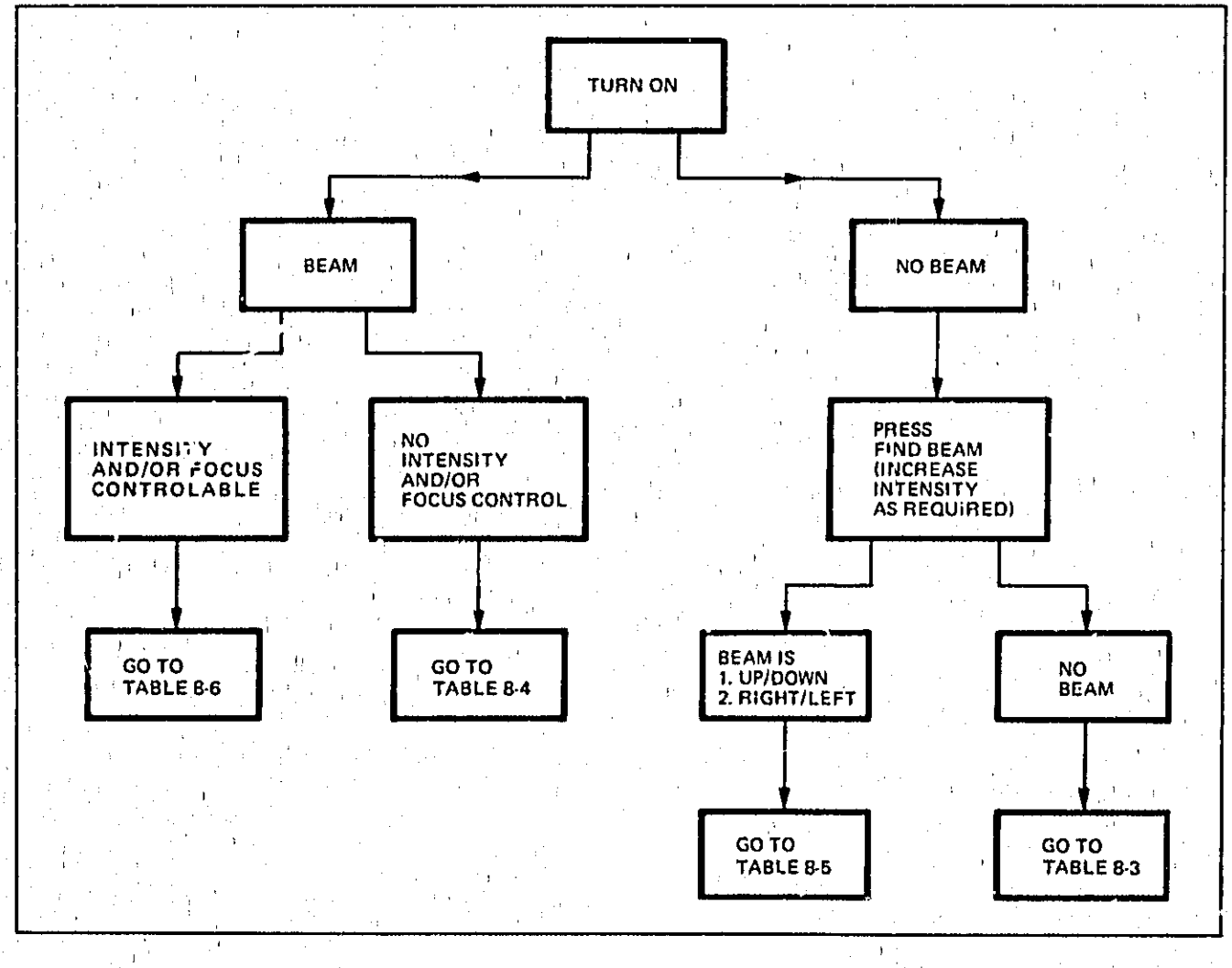

Table 8-3. Troubleshooting Tree

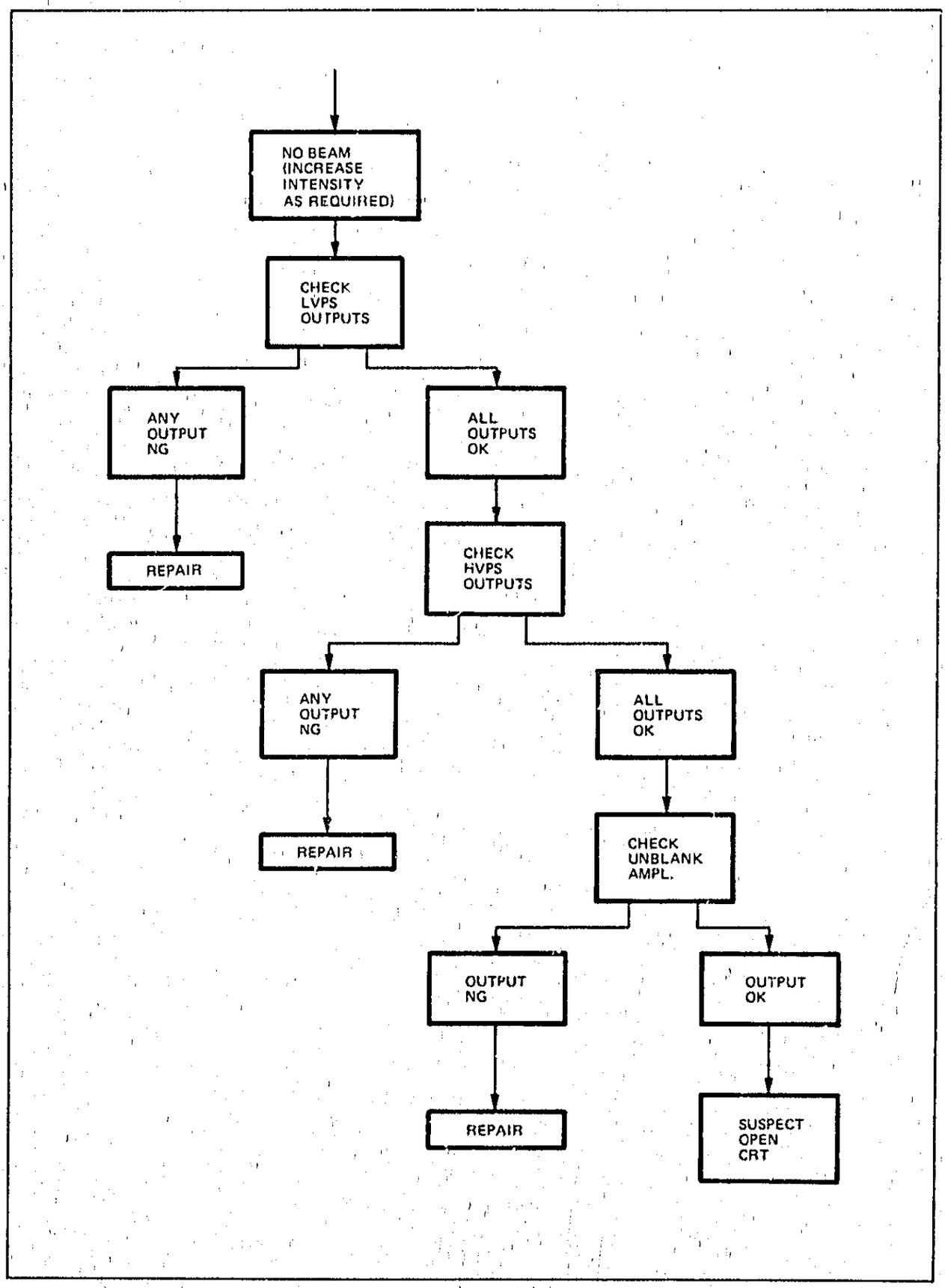

Table 8-4. Troubleshooting Tree

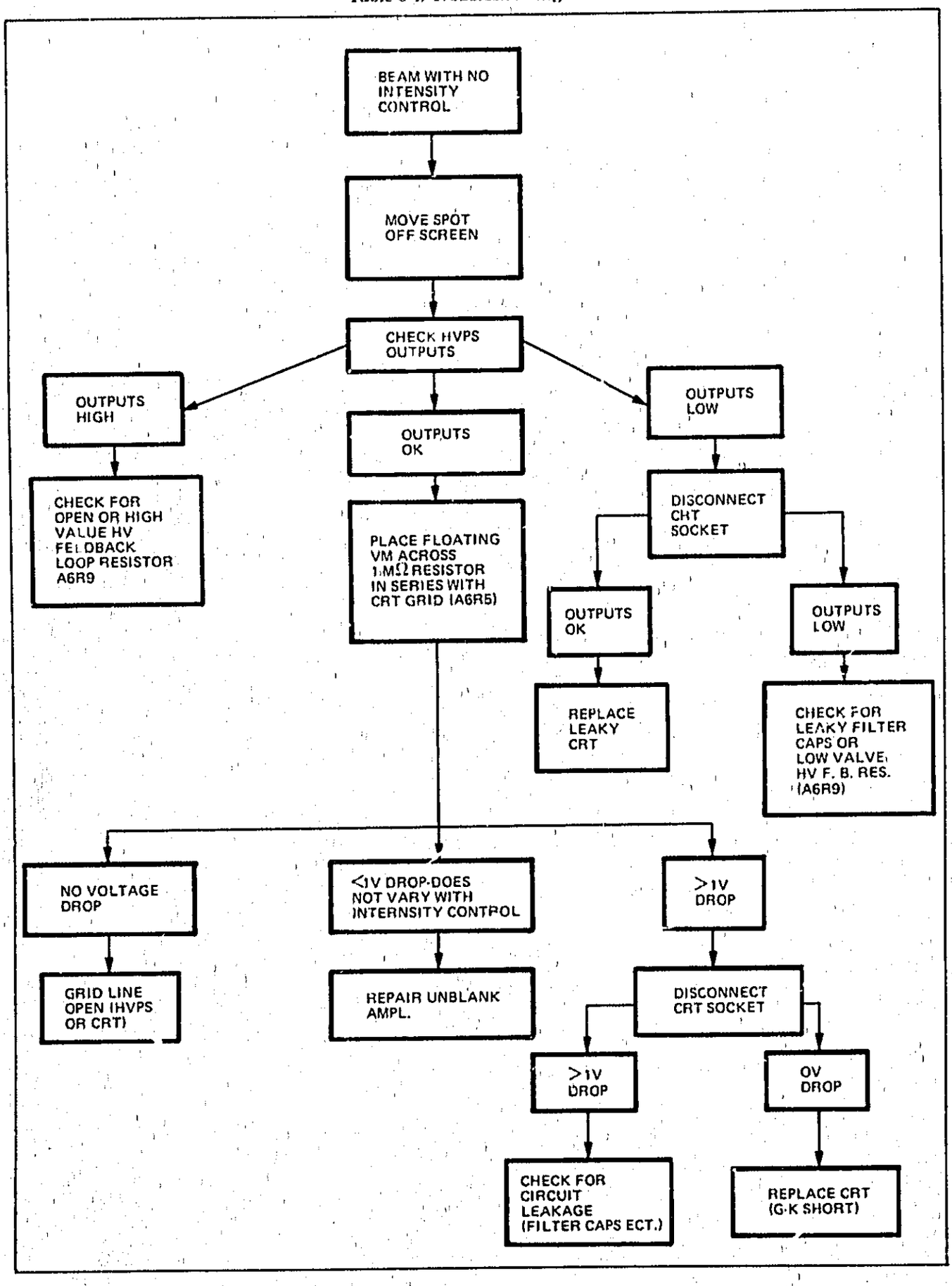

Table 8-5. Troubleshooting Tree

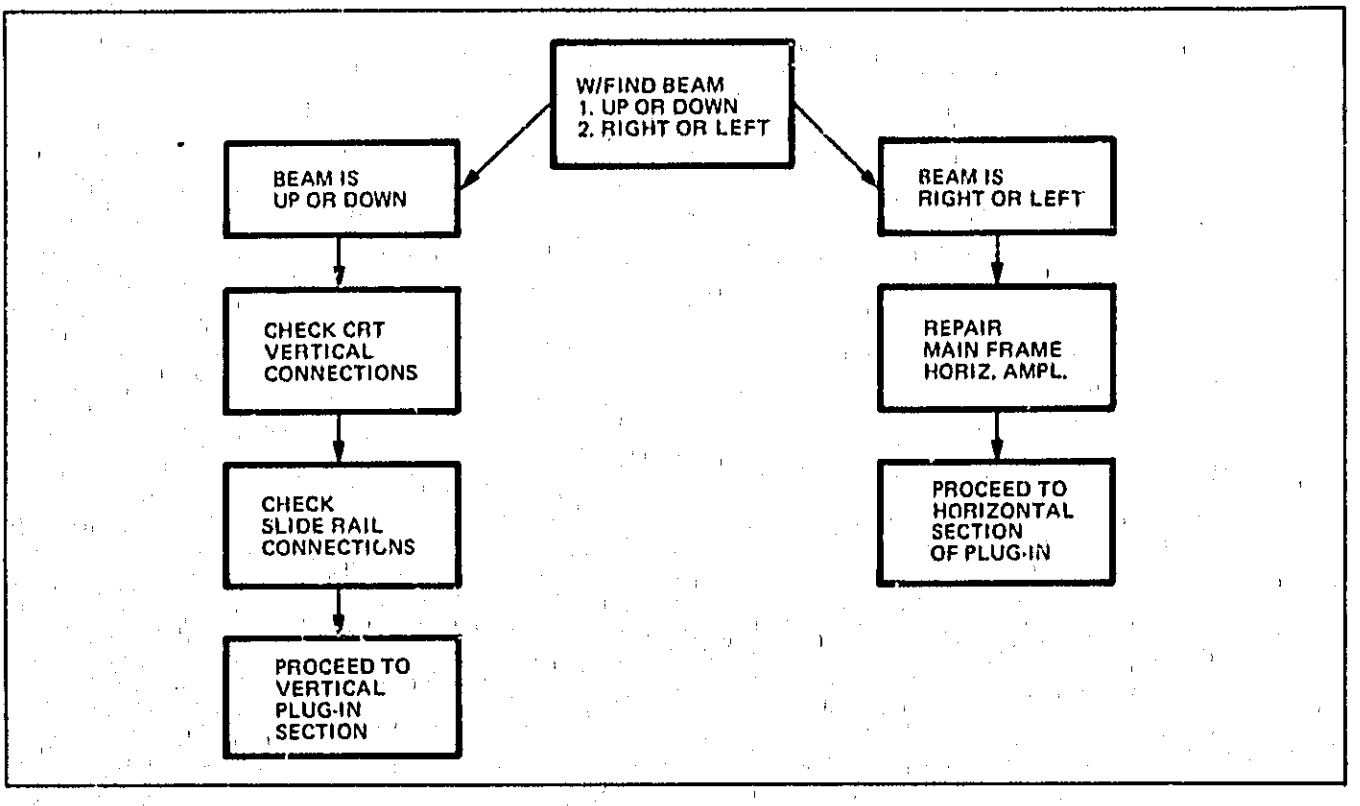

Table 8-6. Troubleshooting Tree

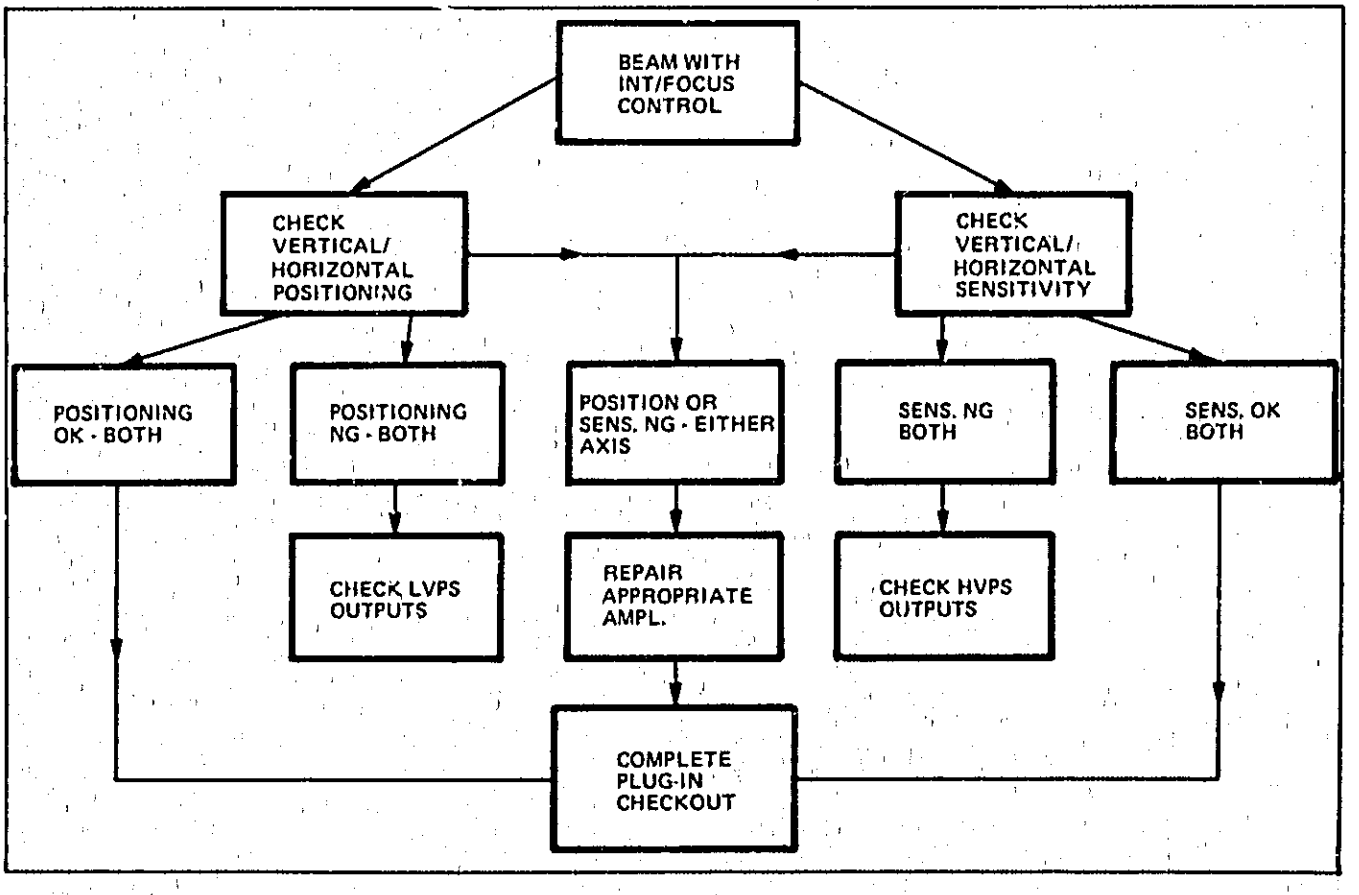

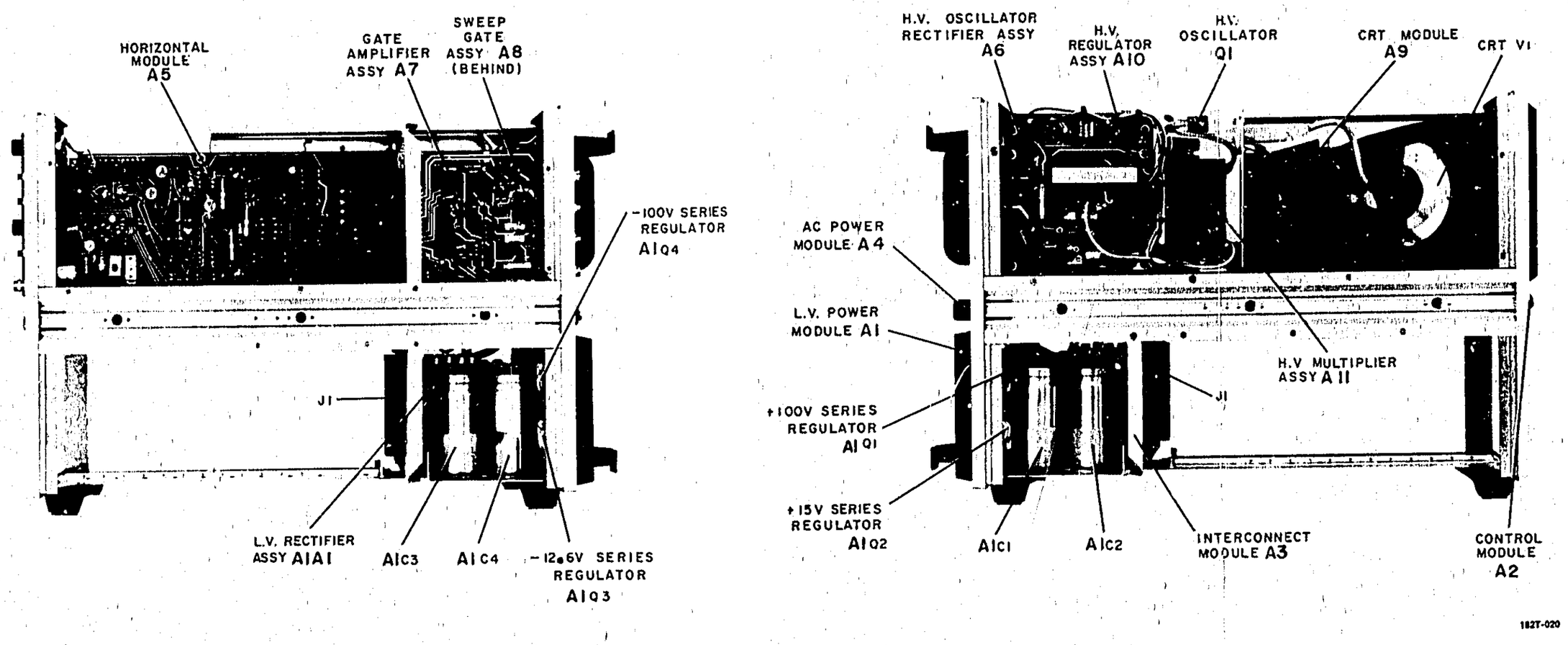

Figure 8-3.
Mainframe Component Identification

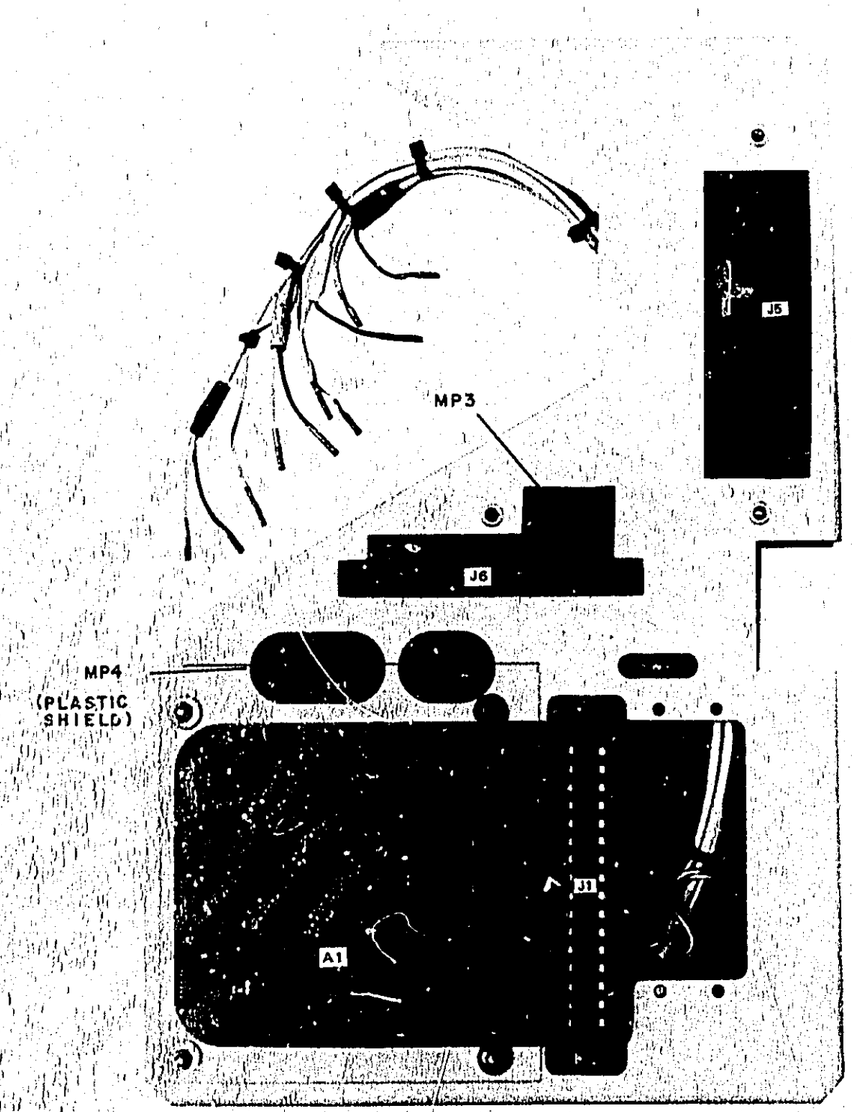

FRONT VIEW

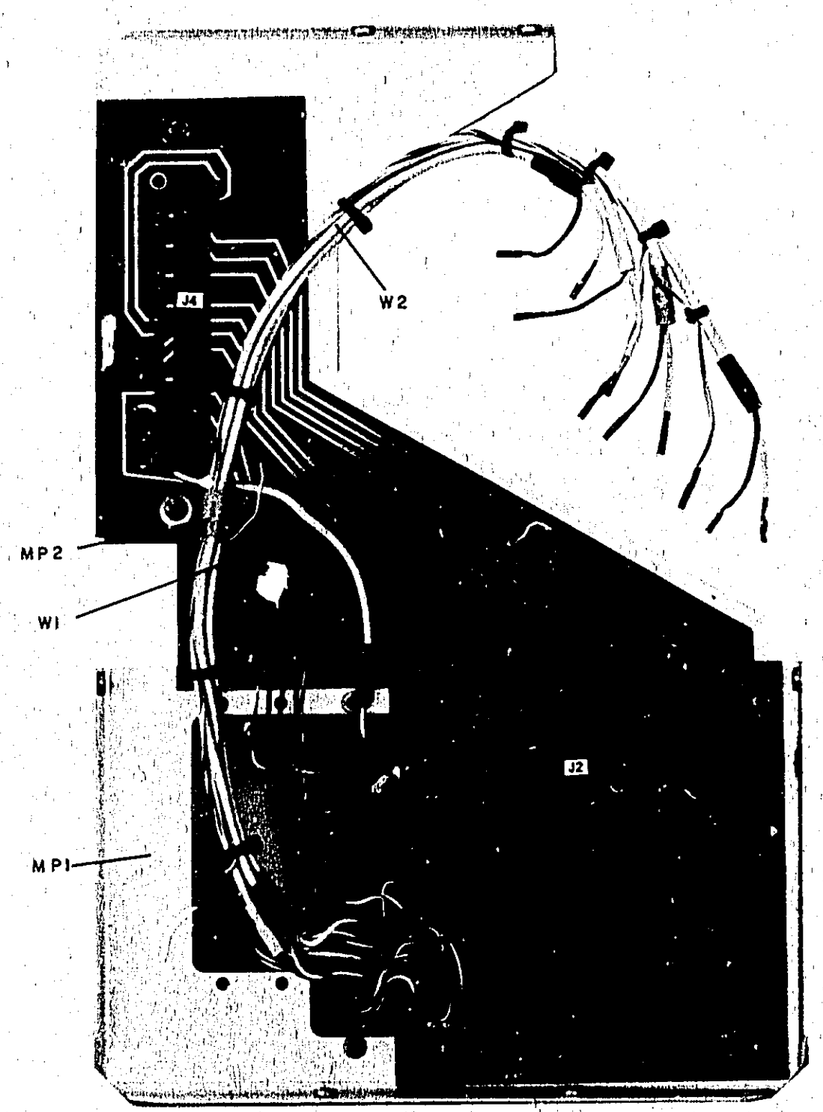

REAR VIEW

A3

182T-015

Figure 8-4. Interconnect Assembly, A3 Component Identification

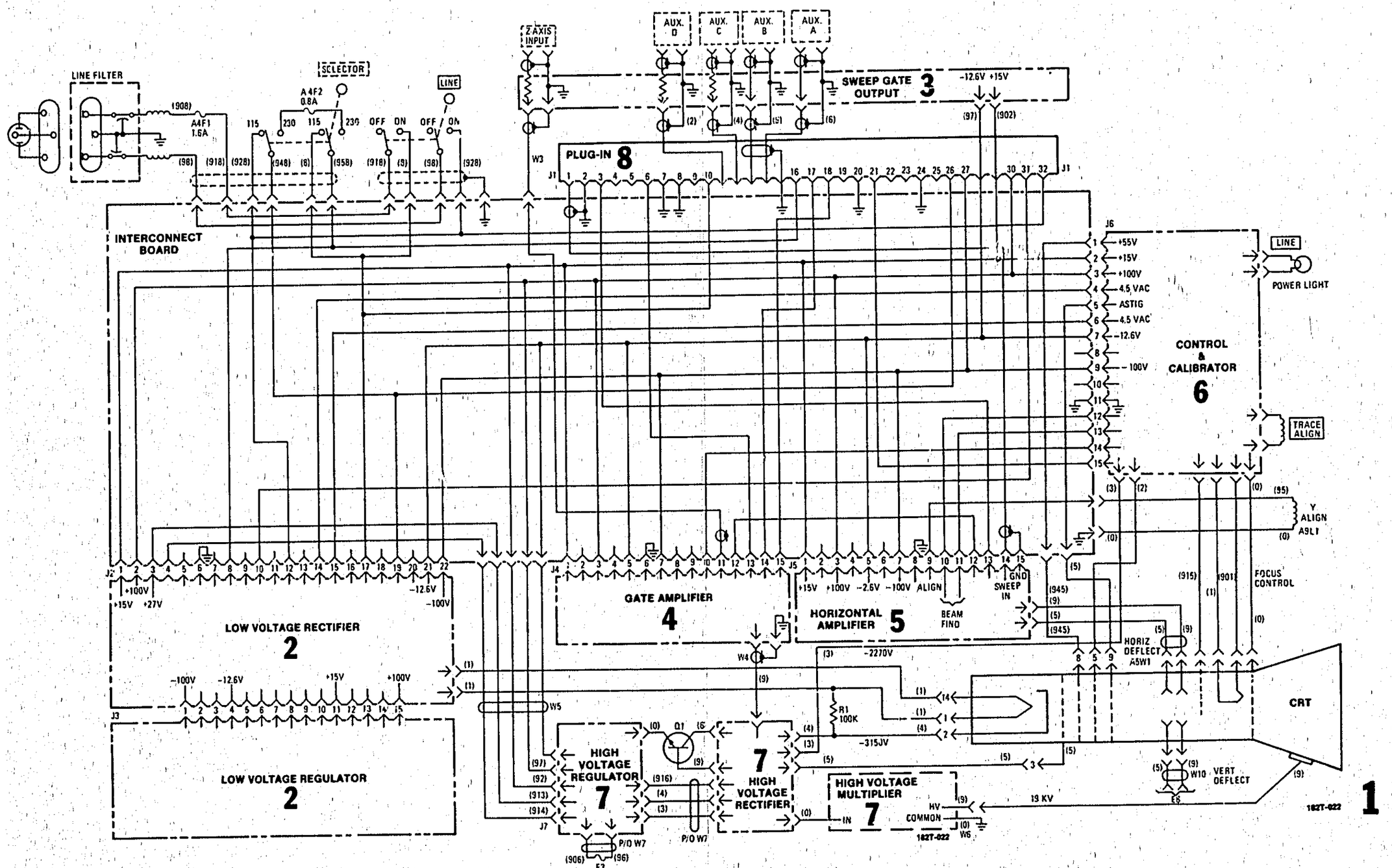

Figure 8-5.
Mainframe Wiring Diagram

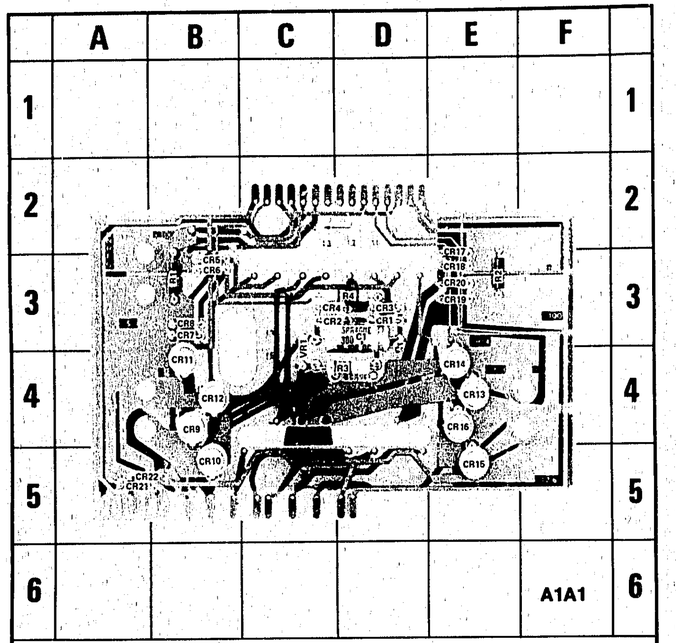

REF DESIG	GRID LOC	REF DESIG	GRID LOC	REF DESIG	GRID LOC	REF DESIG	GRID LOC
C1	D-3	CR7	B-3	CR14	E-4	CR21	A-5
CR1	D-3	CR8	B-3	CR15	E-5	CR22	A-5
CR2	C-3	CR9	B-4	CR16	E-4	R1	B-3
CR3	D-3	CR10	B-5	CR17	E-3	R2	E-3
CR4	C-3	CR11	B-4	CR18	E-3	R3	D-4
CR5	B-3	CR12	B-4	CR19	E-3	R4	D-3
CR6	B-3	CR13	E-4	CR20	E-3	VR1	C-3

182T-023

Figure 8-6. Low Voltage Rectifier, A1A1 Component Identification

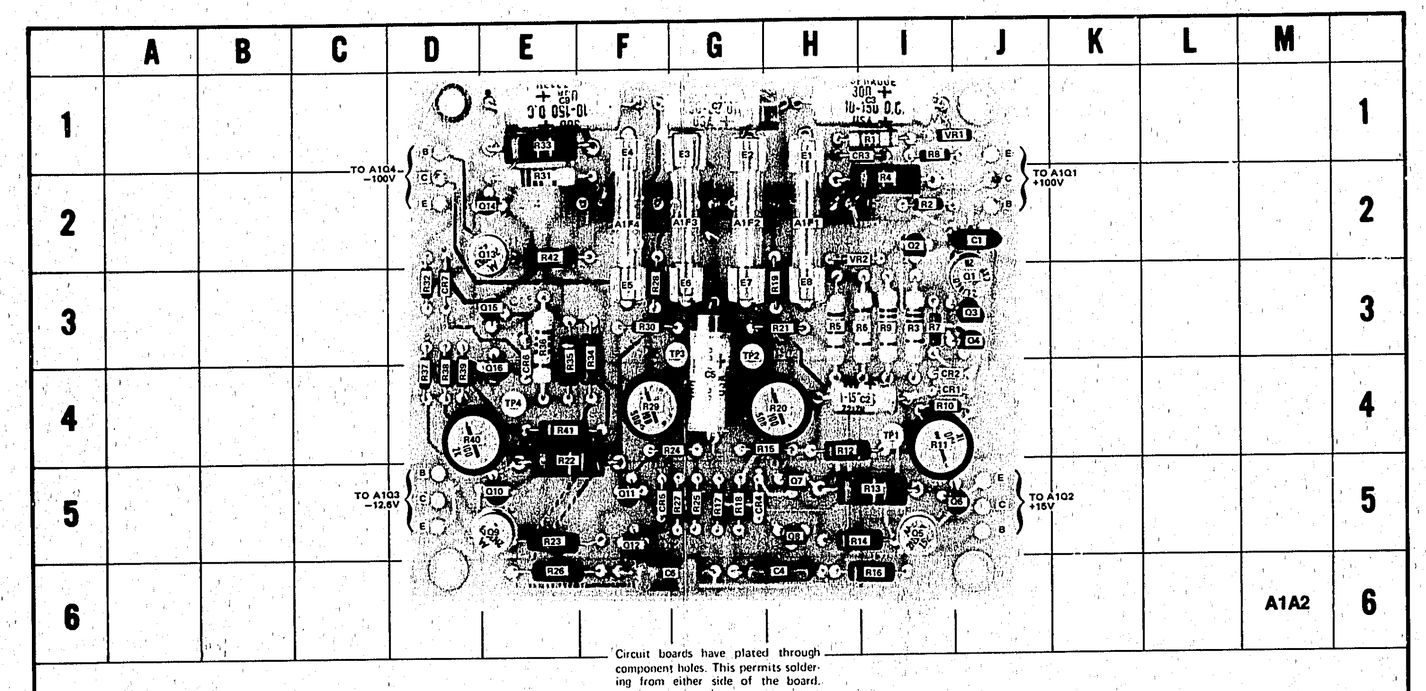

Circuit boards have plated through component holes. This permits soldering from either side of the board.

REF DESIG	GRID LOC	REF DESIG	GRID LOC	REF DESIG	GRID LOC	REF DESIG	GRID LOC	REF DESIG	GRID LOC	REF DESIG	GRID LOC	REF DESIG	GRID LOC	REF DESIG	GRID LOC	REF DESIG	GRID LOC
C1	J-2	CR4	G-5	E-7	G-3	Q5	I-5	Q15	E-3	R9	I-3	R19	H-3	R29	F-4	R39	D-4
C2	I-4	CR5	F-6	E-8	H-3	Q6	J-5	Q16	E-4	R10	I-4	R20	H-4	R30	F-3	R40	D-4
C3	I-1	CR6	E-4	A1F1	H-1	Q7	H-4	R1	I-1	R11	I-4	R21	H-3	R31	E-2	R41	E-4
C4	H-6	CR7	D-3	A1F2	G-2	Q8	H-4	R2	I-2	R12	H-4	R22	E-4	R32	D-3	R42	E-2
C5	G-4	E1	H-1	A1F3	G-2	Q9	E-5	R3	I-3	R13	I-5	R23	E-5	R33	E-1	TP1	I-4
C6	F-6	E-2	G-1	A1F4	F-2	Q10	E-5	R4	I-2	R14	H-5	R24	F-4	R34	F-3	TP2	G-3
C7	G-1	E-3	G-1	Q1	J-3	Q11	F-5	R5	H-3	R15	G-4	R25	G-5	R35	E-3	TP3	G-3
C9	E-1	E-4	F-1	Q2	I-2	Q12	F-5	R6	I-3	R16	I-6	R26	E-6	R36	E-3	TP4	E-4
CR1	I-4	E-5	F-3	Q3	J-3	Q13	E-2	R7	I-3	R17	G-5	R27	G-5	R37	D-4	VR1	J-1
CR2	I-4	E-6	G-3	Q4	J-3	Q14	E-2	R8	I-2	R18	G-5	R28	F-3	R38	D-4	VR2	H-2
CR3	I-1																

182T-024

Figure 8-7. Low Voltage Regulator, A1A2 Component Identification

Table 8-7. Low Voltage Power Supply Measurement Conditions

1. Set controls as follows:

   LINE power ON.

   Plug-ins not installed.

   Line voltage 115 Vac.

2. All dc voltages are referenced to ground.

3. All dc voltages measured with HP Model 1414A Auto Voltmeter. (100 MΩ input impedance).

4. Voltages indicated on schematic remain approximately as indicated when power supply is operated with HP Model 10133A Service Extender.

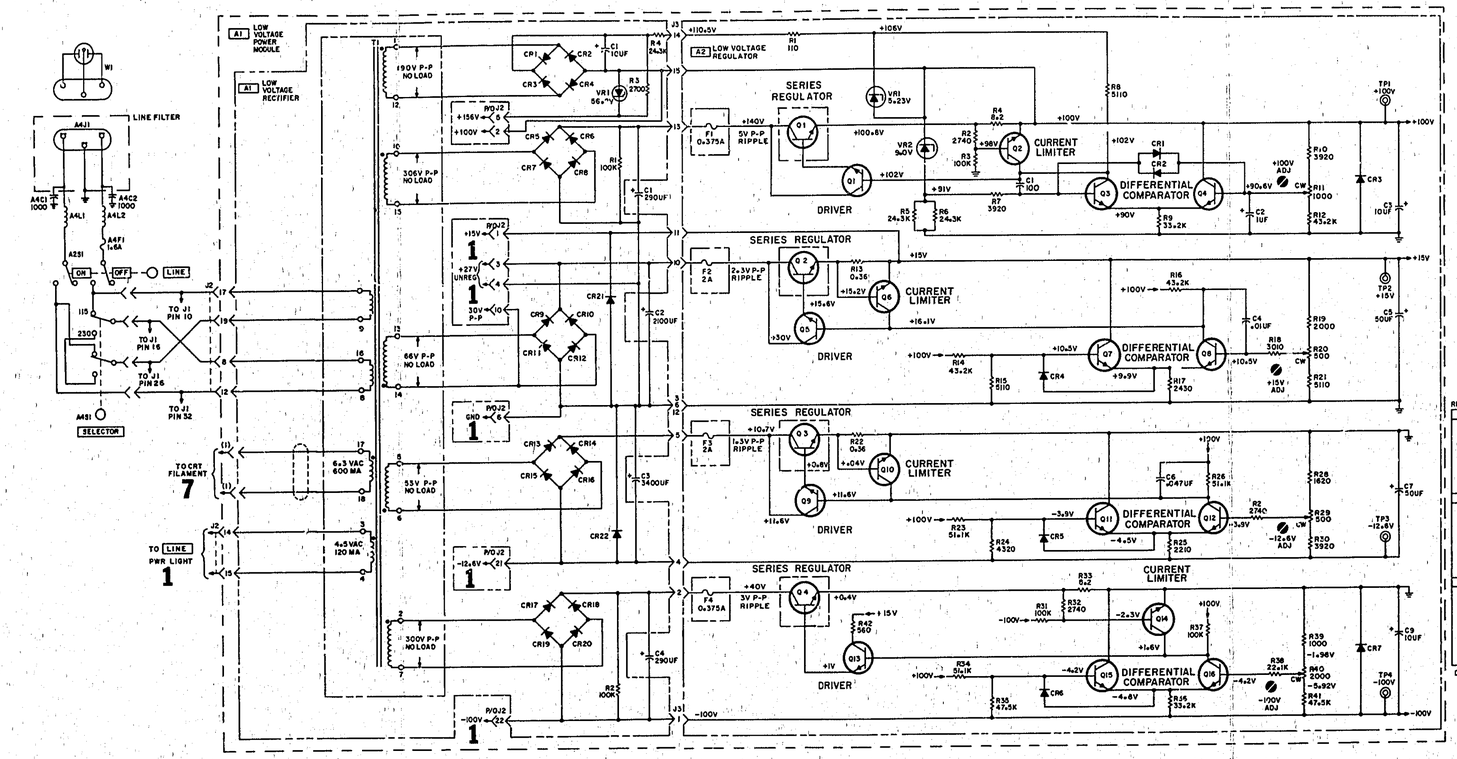

Figure 8-8. Low Voltage Power Supply

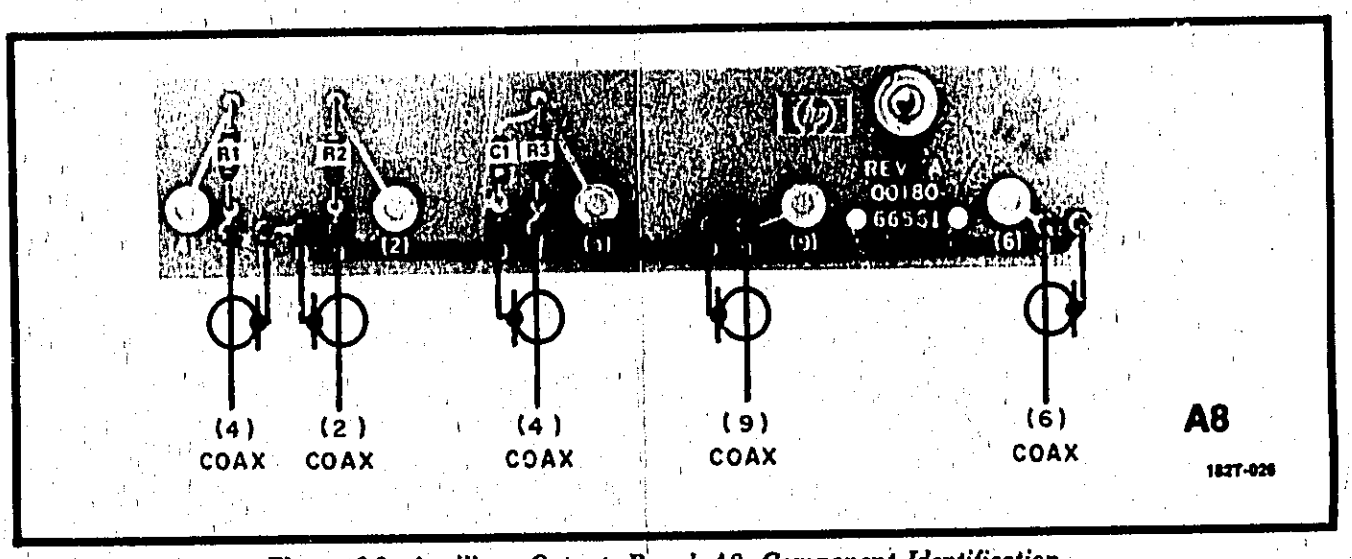

Figure 8-9. Auxiliary Output Board, A8 Component Identification

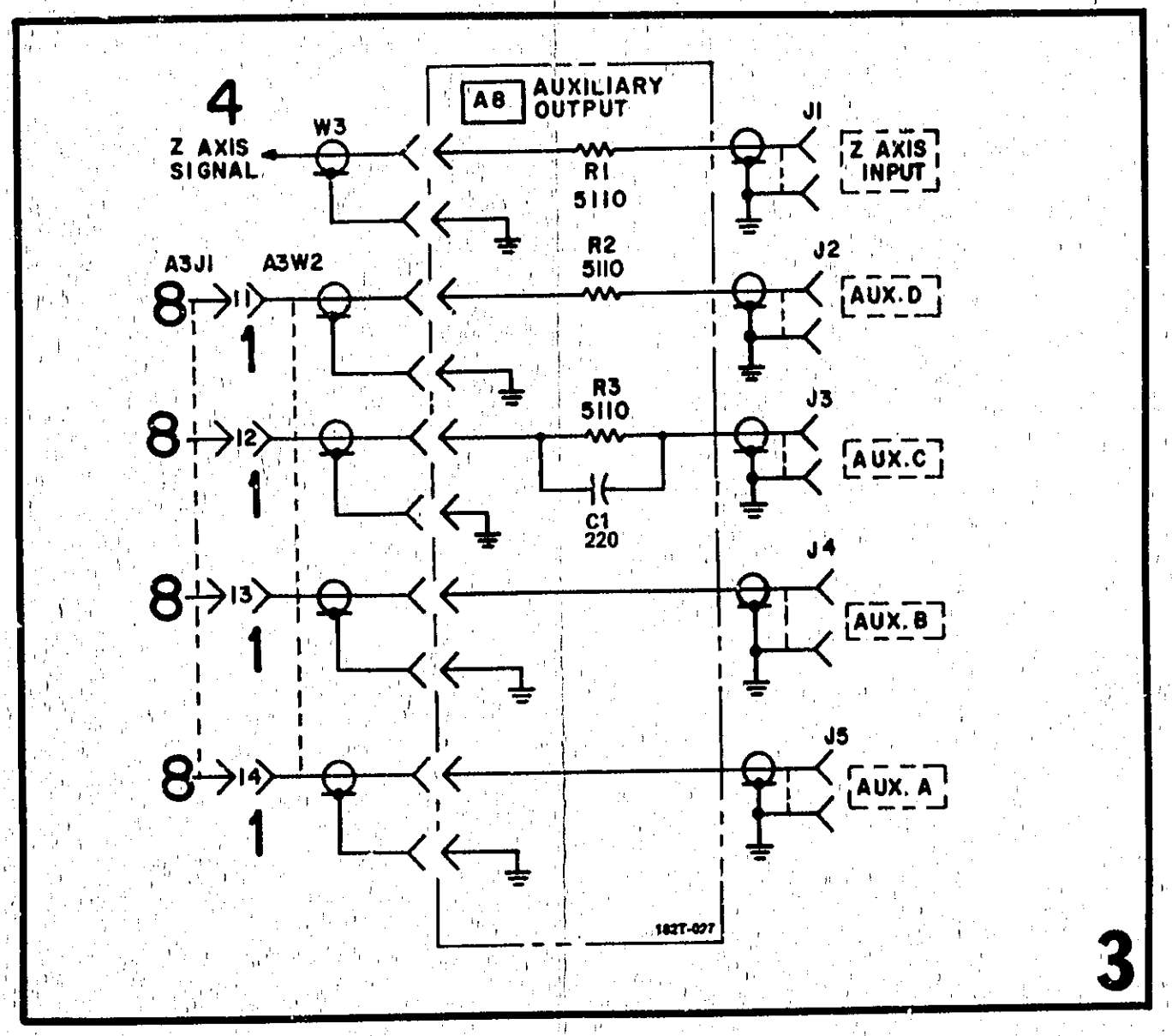

Figure 8-10. Auxiliary Output Board

Circuit boards have plated through component holes. This permits soldering from either side of the board.

A7

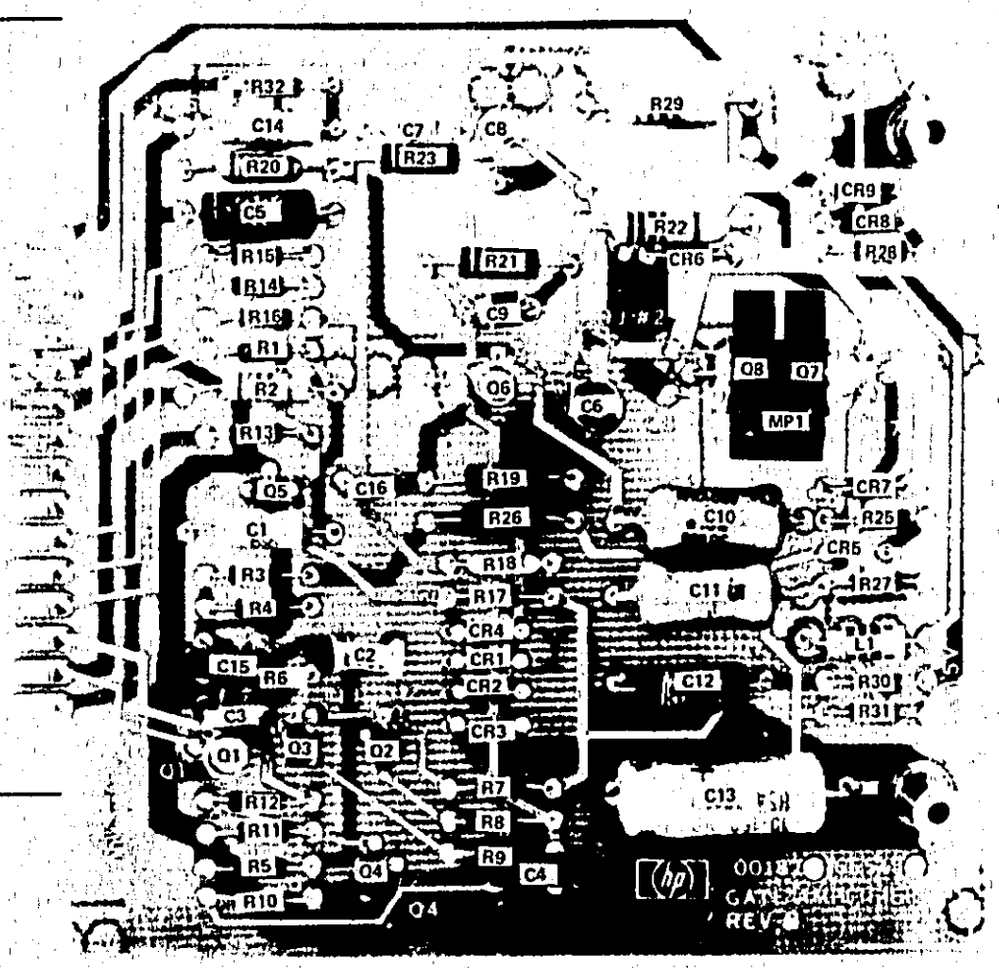

REF DESIG	GRID LOC	REF DESIG	GRID LOC	REF DESIG	GRID LOC	REF DESIG	GRID LOC	REF DESIG	GRID LOC	REF DESIG	GRID LOC
C1	B-4	C11	E-4	CR6	D-3	Q7	E-3	R10	B-6	R21	C-3
C2	C-5	C12	D-5	CR7	E-4	Q8	E-3	R11	B-6	R22	D-3
C3	B-5	C13	D-6	CR8	E-3	R1	B-3	R12	B-6	R23	C-2
C4	D-6	C14	B-2	CR9	E-2	R2	B-3	R13	B-4	R25	E-4
C5	B-3	C15	B-5	L1	E-5	R3	B-4	R14	B-3	R26	C-4
C6	D-4	C16	C-4	Q1	B-5	R4	B-5	R15	B-3	R27	E-4
C7	C-2	CR1	C-5	Q2	C-5	R5	B-6	R16	B-3	R28	E-3
C8	C-2	CR2	C-5	Q3	B-5	R6	B-5	R17	C-4	R29	D-2
C9	C-3	CR3	C-5	Q4	C-6	R7	C-5	R18	C-4	R30	E-5
C10	E-4	CR4	C-5	Q5	B-4	R8	C-6	R19	C-4	R31	E-5
		CR5	E-4	Q6	C-3	R9	C-6	R20	B-2	R32	B-2

182T-029

Figure 8-11. Gate Amplifier, A7 Component Identification

Table 8-8. Gate Amplifier Voltage Measurement Conditions

1. Set controls as follows:

   LINE power ON.

   Plug-ins not installed.

   No signal input.

INT	fully CCW
SCALE	fully CCW
FOCUS	fully CW
POSITION	centered
EXT VERNIER	CAL
DISPLAY	EXT
MAGNIFIER	XI

2. All voltages are referenced to ground.

3. All voltages measured with HP Model 414A Auto Voltmeter. (100 MΩ input impedance).

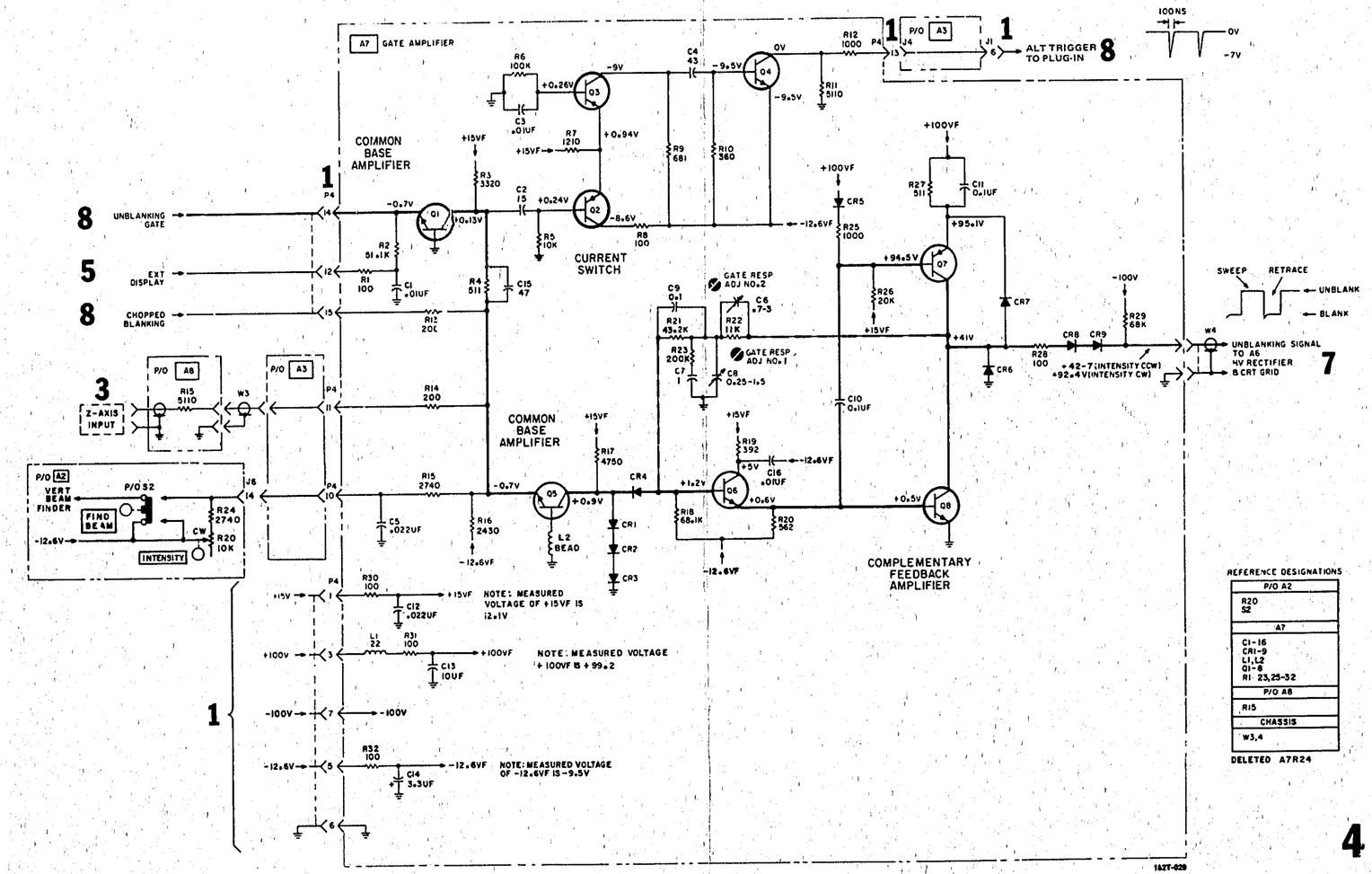

Figure 8-12. Gate Amplifier A7

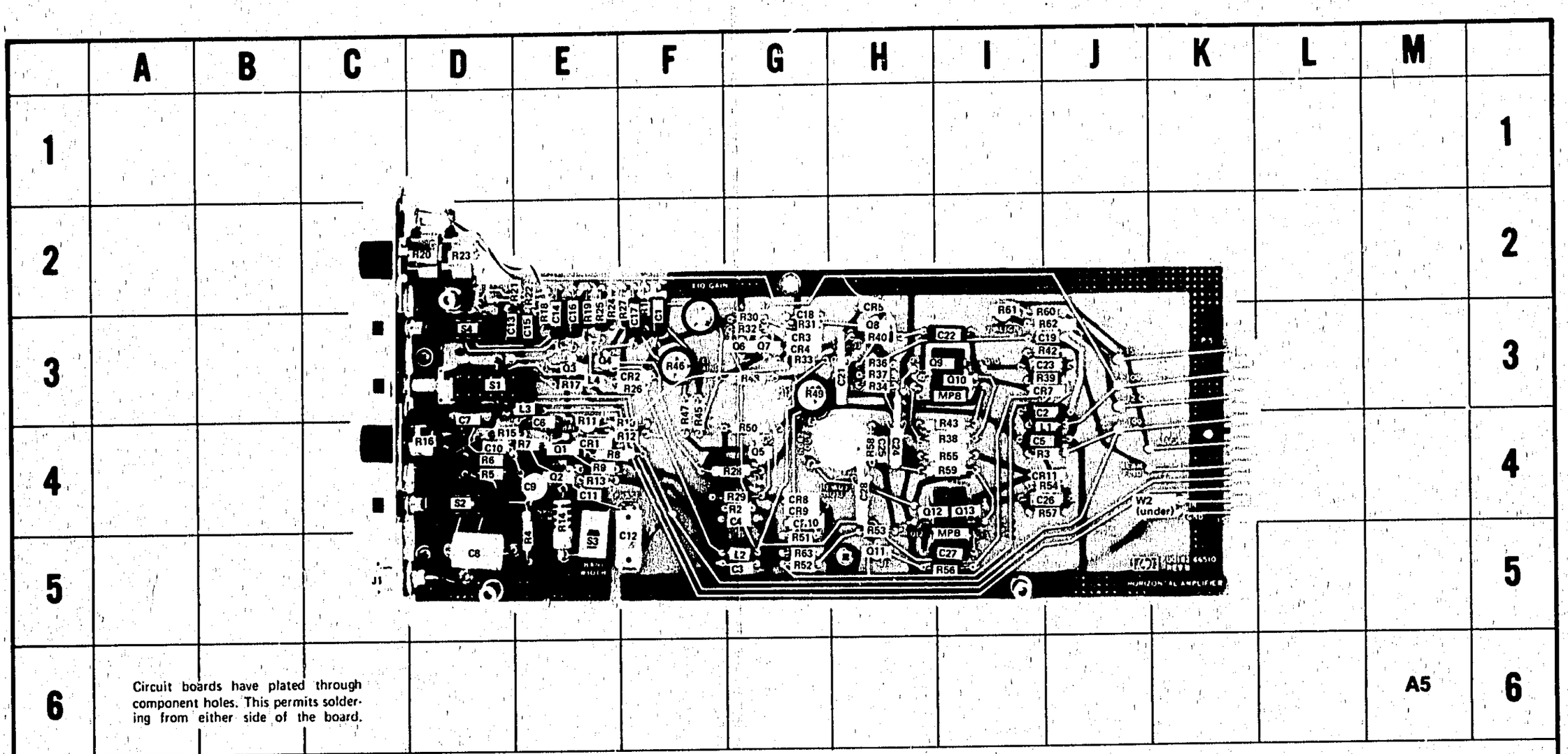

REF DESIG	GRID LOC	REF DESIG	GRID LOC	REF DESIG	GRID LOC	REF DESIG	GRID LOC	REF DESIG	GRID LOC	REF DESIG	GRID LOC	REF DESIG	GRID LOC	REF DESIG	GRID LOC	REF DESIG	GRID LOC	REF DESIG	GRID LOC
C1	F-3	C14	E-3	C28	H-4	L2	G-5	Q9	I-3	R8	E-4	R20	D-2	R32	G-3	R46	F-3	R58	H-4
C2	J-3	C15	E-3	CR1	E-4	L3	E-3	Q10	I-3	R9	E-4	R21	E-2	R33	G-3	R47	F-3	R59	I-4
C3	G-5	C16	E-3	CR2	F-3	L4	E-3	Q11	H-5	R10	F-4	R22	E-2	R34	H-3	R48	G-3	R60	J-3
C4	G-4	C17	F-3	CR3	G-3	MP8	I-3	Q12	I-4	R11	E-4	R23	D-2	R36	H-3	R49	G-3	R61	I-3
C5	J-4	C18	G-3	CR4	G-3	Q1	E-4	Q13	I-4	R12	F-4	R24	E-3	R37	H-3	R50	G-4	R62	J-3
C6	E-4	C19	J-3	CR5	H-2	Q2	E-4	R1	F-3	R13	E-4	R25	E-3	R38	I-4	R51	G-5	R63	G-5
C7	D-3	C21	H-3	CR7	J-3	Q3	E-3	R2	G-4	R14	E-4	R26	F-3	R39	J-3	R52	G-5	S1	D-3
C8	D-5	C22	I-3	CR8	G-4	Q4	E-3	R3	J-4	R15	D-4	R27	F-2	R40	H-3	R53	H-5	S2	D-4
C9	E-4	C23	J-3	CR9	G-4	Q5	G-4	R4	E-5	R16	D-4	R28	G-4	R42	J-3	R54	J-4	S3	E-5
C10	D-4	C24	H-4	CR10	G-4	Q6	G-3	R5	D-4	R17	E-3	R29	G-4	R43	I-4	R55	I-4	S4	D-3
C11	E-4	C25	H-4	CR11	J-4	Q7	G-3	R6	D-4	R18	E-3	R30	G-3	R44	F-3	R56	I-5	W2	K-4
C12	F-5	C26	J-4	J1	C-5	Q8	H-3	R7	E-4	R19	E-3	R31	G-3	R45	F-3	R57	J-4		
C13	D-3	C27	I-5	L1	J-4														

182T-030

Figure 8-13. Horizontal Amplifier A5, Component Identification

Table 8-9. Horizontal Amplifier Voltage Measurement Conditions

1. Set controls as follows:

   LINE power ON.

   Plug-ins not installed.

   No signal input.

   INT . . . . . fully CCW
   SCALE . . . . . fully CCW
   FOCUS . . . . . fully CW
   POSITION . . . . . centered
   EXT VERNIER . . . . . CAL
   DISPLAY . . . . . EXT
   MAGNIFIER X1

2. All voltages are referenced to ground.

3. All voltages measured with HP Model 414A Auto Voltmeter (100 MΩ input impedance).

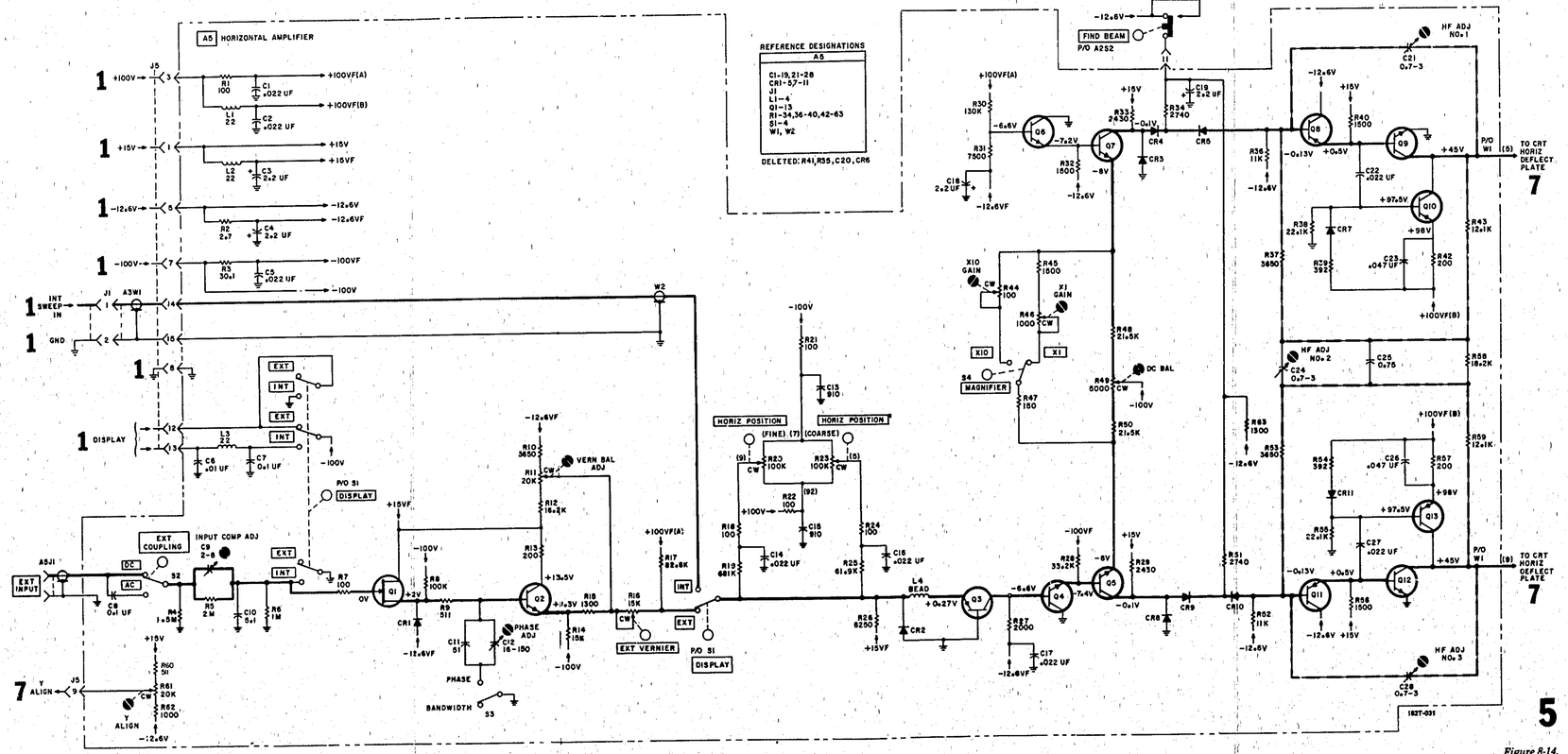

Figure 8-14. Horizontal Amplifier A5

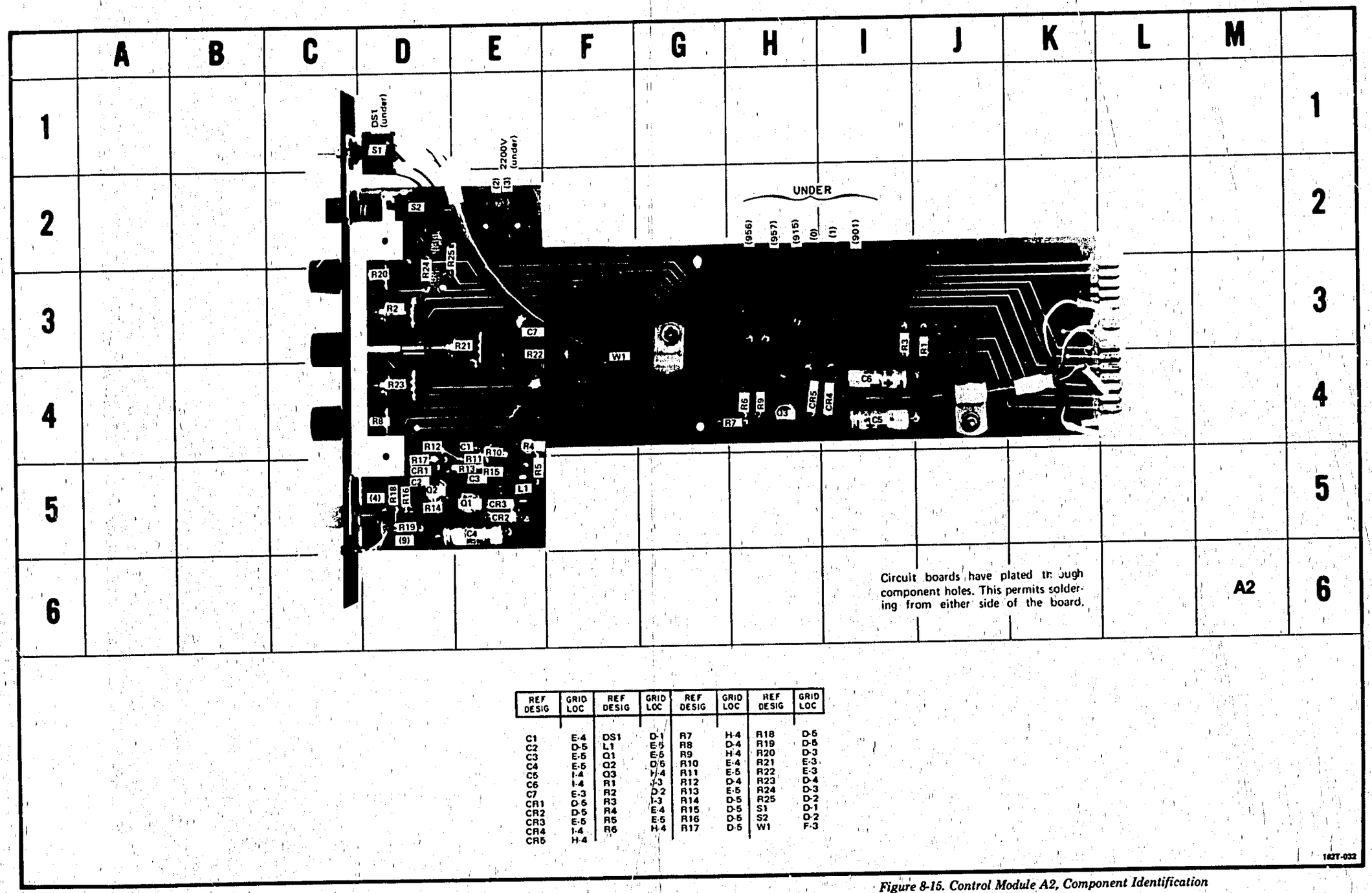

REF DESIG	GRID LOC	REF DESIG	GRID LOC	REF DESIG	GRID LOC	REF DESIG	GRID LOC
C1	E-4	DS1	D-1	R7	H-4	R18	D-5
C2	D-5	L1	E-5	R8	D-4	R19	D-5
C3	E-5	Q1	E-5	R9	H-4	R20	D-3
C4	E-5	Q2	D-5	R10	E-4	R21	E-3
C5	I-4	Q3	H-4	R11	E-5	R22	E-3
C6	I-4	R1	I-3	R12	D-4	R23	D-4
C7	E-3	R2	D-2	R13	E-5	R24	D-3
CR1	D-5	R3	I-3	R14	D-5	R25	D-2
CR2	D-5	R4	E-4	R15	D-5	S1	D-1
CR3	E-5	R5	E-5	R16	D-5	S2	D-2
CR4	I-4	R6	H-4	R17	D-5	W1	F-3
CR5	H-4						

Figure 8-15. Control Module A2, Component Identification

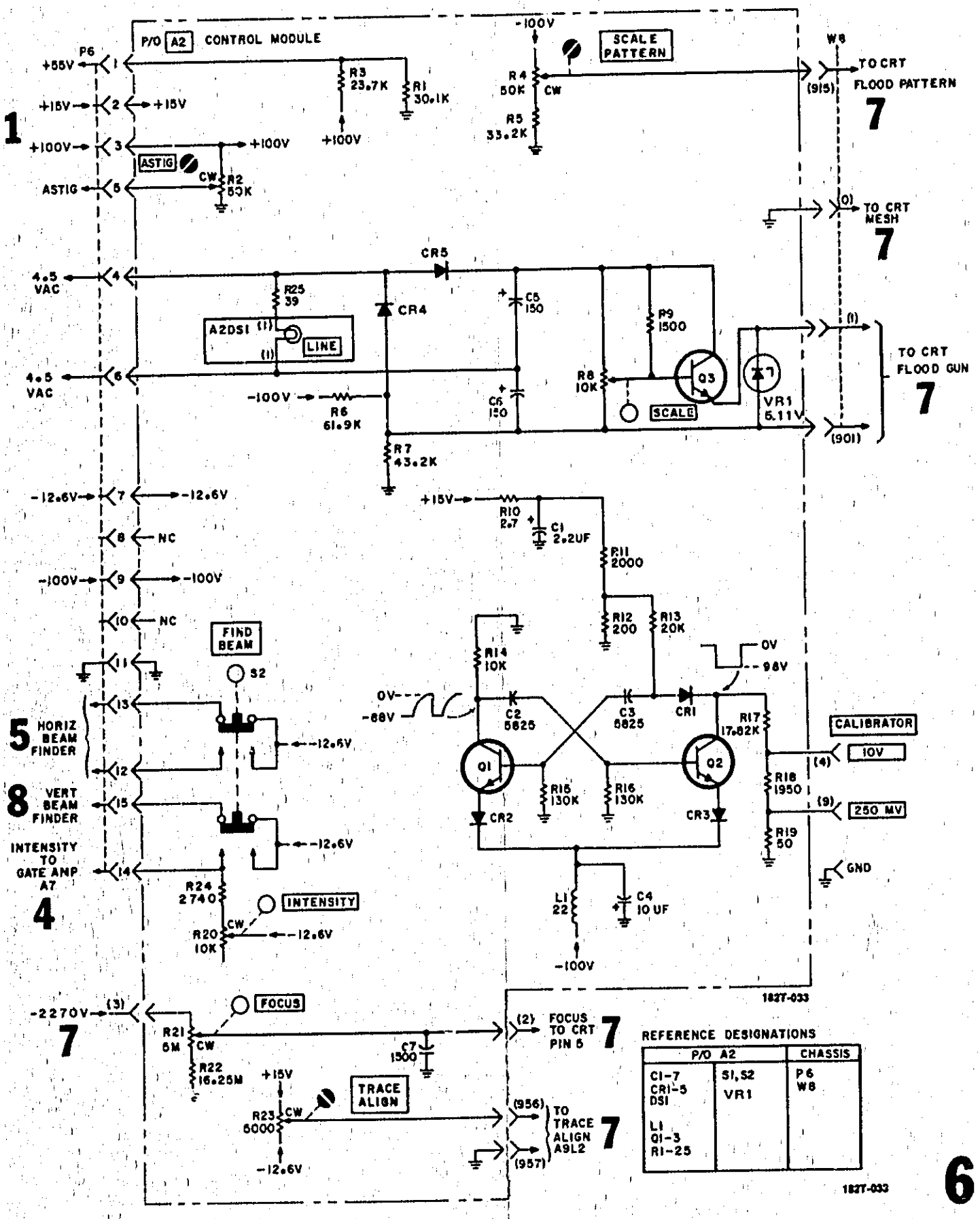

Figure 8-16. Control Module A2

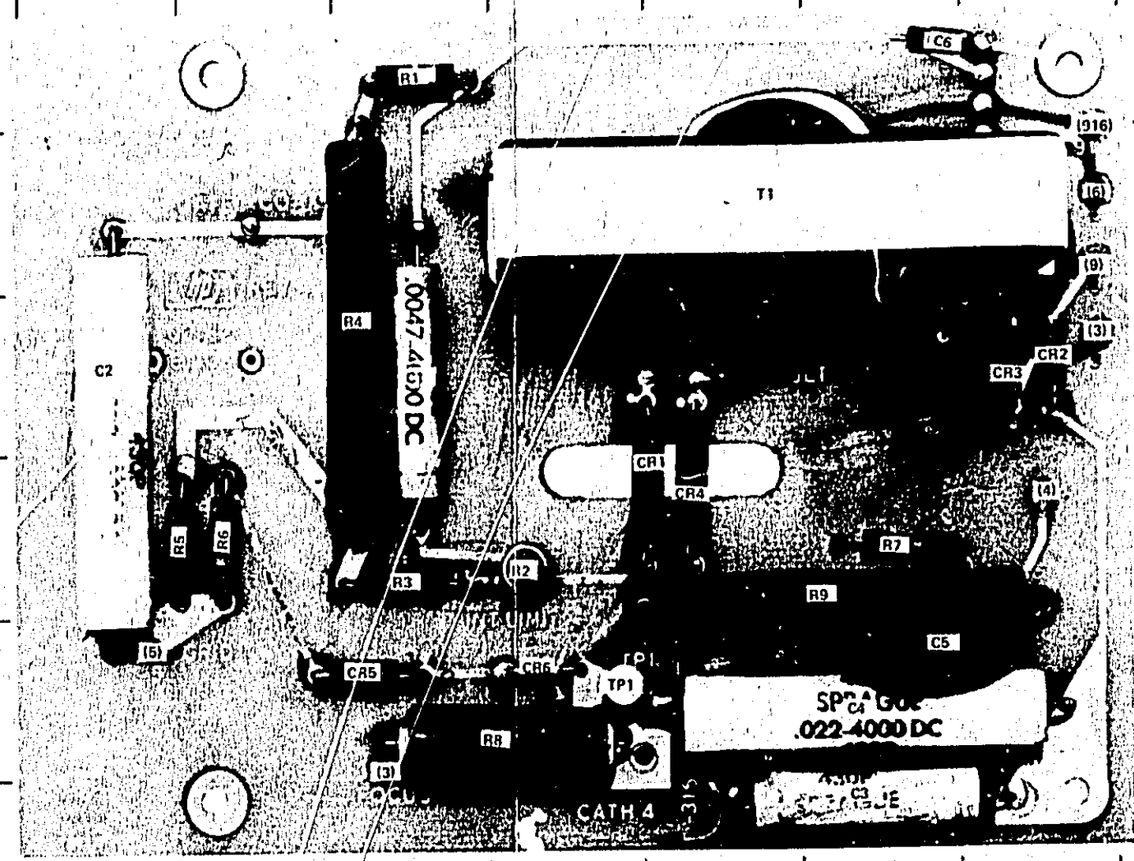

Circuit boards have plated through component holes. This permits soldering from either side of the board.

REF DESIG	GRID LOC	REF DESIG	GRID LOC	REF DESIG	GRID LOC
C1	F-3	CR3	J-3	R5	E-4
C2	D-3	CR4	H-4	R6	E-4
C3	I-6	CR5	F-5	R7	I-4
C4	I-5	CR6	G-5	R8	G-5
C5	I-5	R1	F-1	R9	I-4
C6	I-1	R2	G-4	T1	H-2
CR1	H-4	R3	F-4	TP1	G-5
CR2	J-3	R4	F-3		

182T-034

Figure 8-17. Oscillator and Rectifier A6, Component Identification

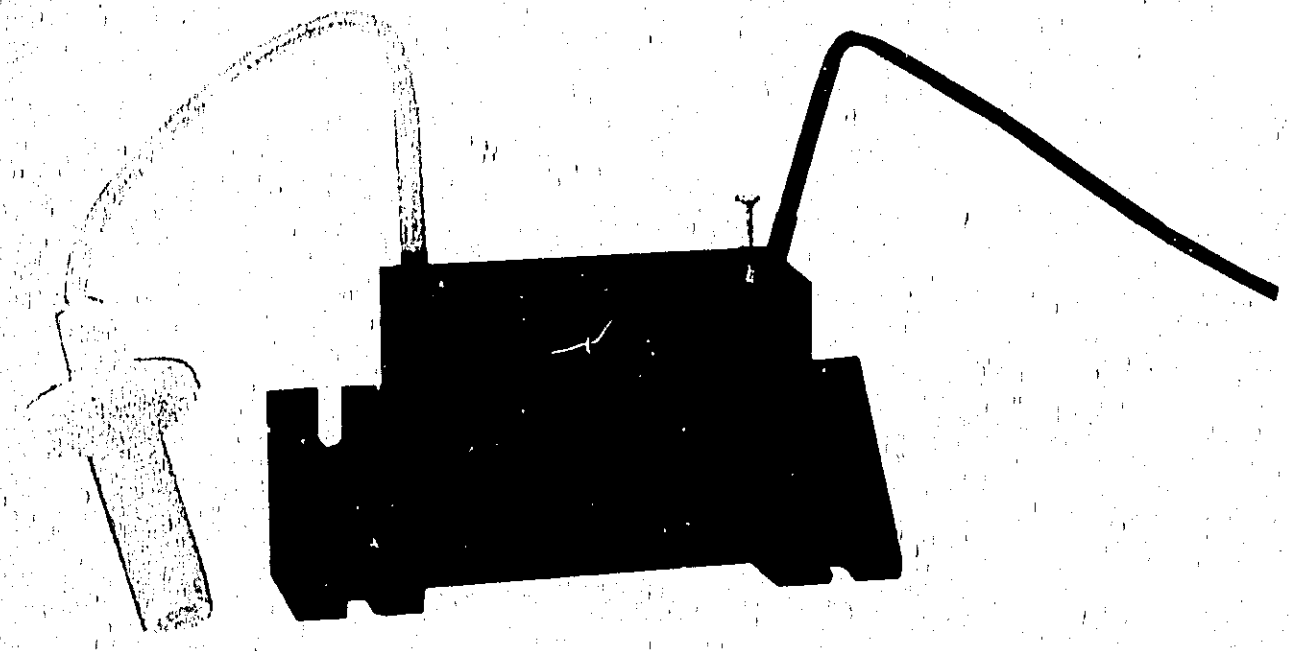

Figure 8-18.
H. V. Multiplier

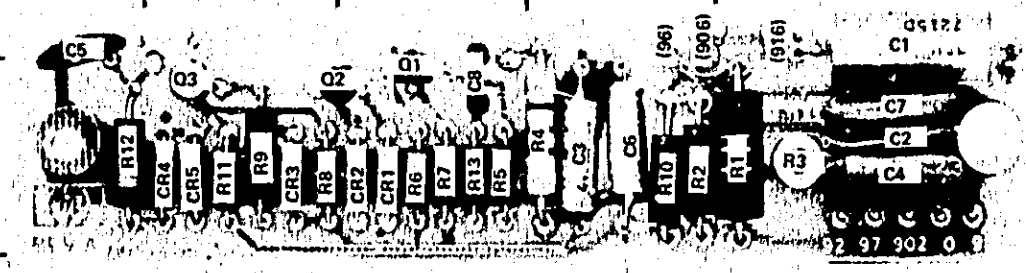

Circuit boards have plated through component holes. This permits soldering from either side of the board.

A10

REF DESIG	GRID LOC	REF DESIG	GRID LOC	REF DESIG	GRID LOC
C1	E-3	CR3	B-3	R5	C-3
C2	E-3	CR4	B-3	R6	C-3
C3	D-3	CR5	B-3	R7	C-3
C4	E-3	Q1	C-3	R8	B-3
C5	A-2	Q2	B-3	R9	B-3
C6	D-3	Q3	B-3	R10	D-3
C7	E-3	R1	E-3	R11	B-3
C8	C-3	R2	D-3	R12	A-3
CR1	C-3	R3	E-3	R13	C-3
CR2	C-3	R4	D-3		

182T-036

Figure 8-19. H. V. Regulator A10, Component Identification

Table 8-10. H. V. Power Supply Voltage Measurement Conditions

1. Set controls as follows:

   LINE power ON.

   Plug-ins not installed.

   No signal input

   INT . . . . . fully CCW
   SCALE . . . . . fully CCW
   FOCUS . . . . . fully CCW

2. All voltages are referenced to ground.

3. Low voltages measured with HP Model 414A Auto Voltmeter (100 MΩ input impedance).

4. To measure high voltages use HP Model K05-3440A 1000:1 Divider Probe and HP Model 3440A Digital Voltmeter with HP Model 3441A or 3444A plug-in.

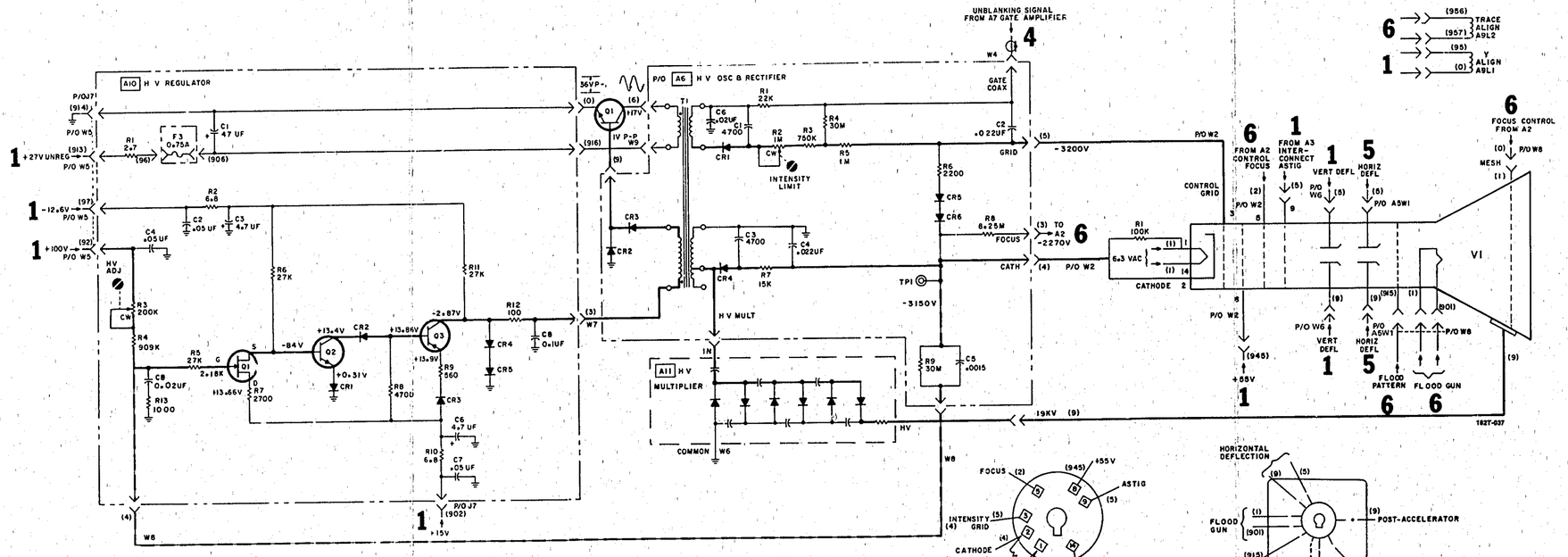

REFERENCE DESIGNATIONS

A6	A9	A10	CHASSIS
C1-5 CR1-6 R1-9 T1 TP1	L1,2	C1-8 CR1-5 F1 Q1-3 R1-13	F-3 J1 R1 V1 W2, 6, 8

DELETED.

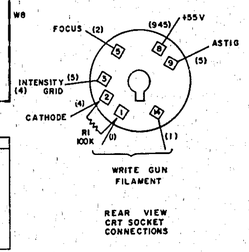

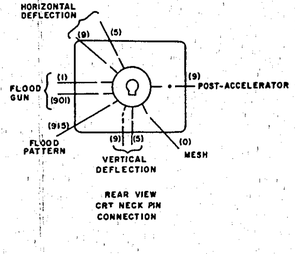

182T-037

7

Figure 8-20. High Voltage Power Supply

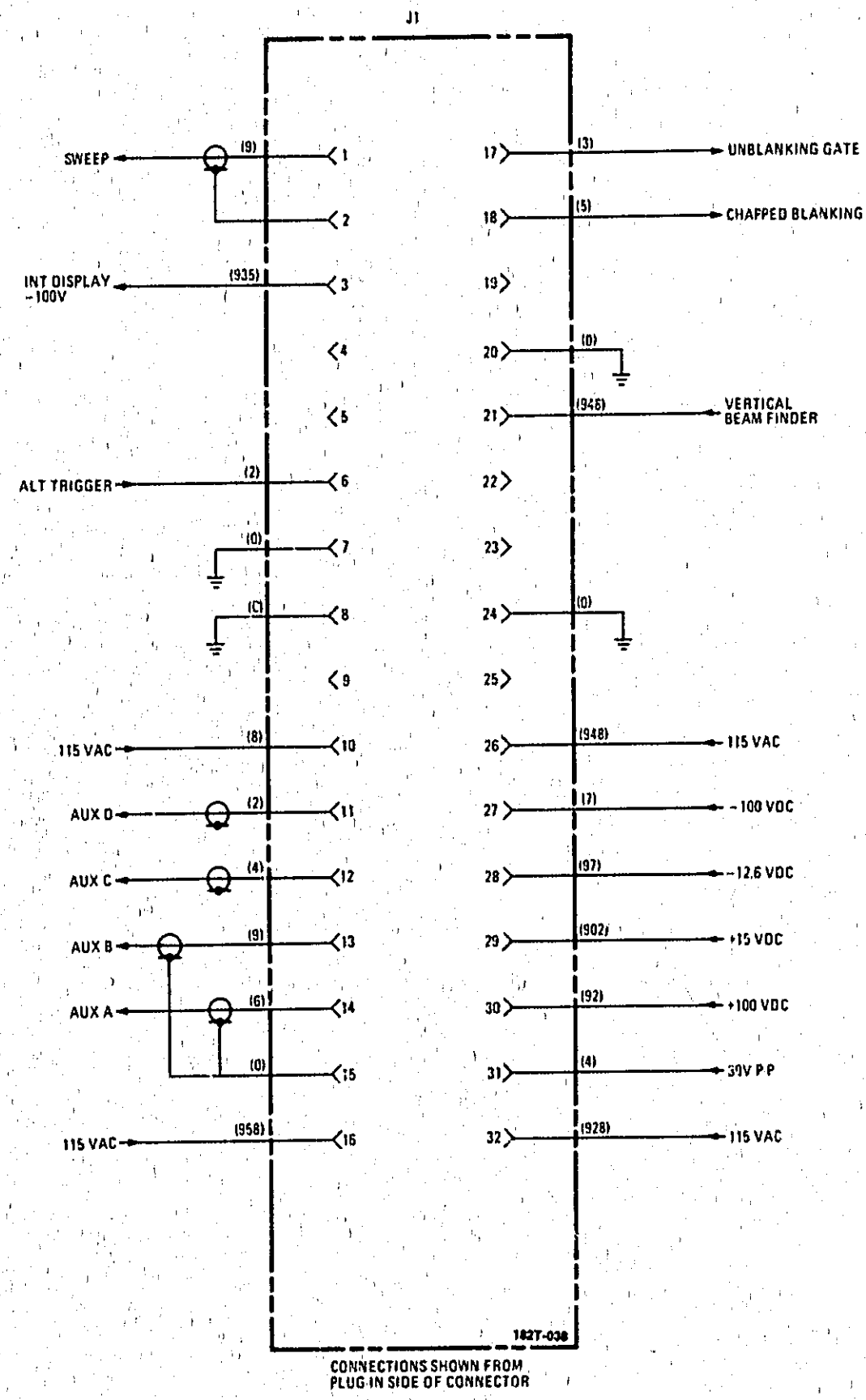

Figure 8-21. Spectrum Analyzer Plug-in Connections

8

MANUAL CHANGES

MANUAL IDENTIFICATION

Model Number:	182T
Date Printed:	May 1976
Part Number:	00182-90909

This supplement contains important information for correcting manual errors and for adapting the manual to instruments containing improvements made after the printing of the manual.

To use this supplement:

Make all ERRATA corrections.

Make all appropriate serial number related changes indicated in the tables below.

Serial Prefix or Number	Make Manual Changes
1705A	1
1751A	1, 2
1910A	1, 2, 3
1941A	1, 2, 3, 4

Serial Prefix or Number	Make Manual Changes

▲ NEW ITEM

▲ ERRATA

Table 6-2. Replaceable Parts,

Change: MP 18 HP Part and Mfr No. to 00182-60041.
Change: MP29 HP Part and Mfr No. to 00182-00223.
Change: W1 HP Part and Mfr No. to 8120-1521.
Change: A1F1, HP Part No. 2110-0005, FUSE 1.6 A 250V 1.25X .25UL, Mfr Code 71400, Mfr No. MDX 1-6/10.
Change: A1F2, HP Part No. 2110-0020, FUSE .8A 250V 1.25X .25UL, Mfr Code 71400, Mfr No. MDL 8110.
Change: A2 HP Part and Mfr No. to 00182-60044.
Add: A2C8, HP Part No. 0160-3448, C:FXD CER 1000PF 1KVDCW, Mfr Code 56289, Mfr No. C016B102F471KS25-CDH.
Change: A2VR1 HP Part and Mfr No. to 1902-0041.
Change: A5 HP Part and Mfr No. to 00182-60043.
Change: A5R11, HP Part No. 2100-2514, R:TRMR 20K 10% C SIDE-ADJ I-TRN, Mfr Code 01121, Mfr No. A4B.
Change: A5S3, HP Part No. 3101-2265, SWITCH: SLIDE DPDT SUBMIN .5A 125VAC/DC PC, Mfr Code 82389, Mfr No. C56206L2.
Change: A7C3 HP Part and Mfr No. to 0160-3451.
Change: A10C5, HP Part No. 0160-3622, C:FXD .1UF +80-20% 100VDC CER, Mfr Code 72982, Mfr No. 8131-100-651-104Z.

NOTE

Manual change supplements are revised as often as necessary to keep manuals as current and accurate as possible. Hewlett-Packard recommends that you periodically request the latest edition of this supplement. Free copies are available from all HP offices. When requesting copies quote the manual identification information from your supplement, or the model number and print date from the title page of the manual.

HEWLETT hp PACKARD

Printed in U.S.A.

ERRATA (Cont'd)

Change: A10C8, HP Part No. 0160-3443, C:FXD .1UF +80-20% 50VDC CER, Mfr Code 72982, Mfr No. 8131-N072-651-104Z.
Add: A10R14, HP Part No. 0757-0464, R:FXD .15MF 90.9K, Mfr Code 01121, Mfr No. CC.
Section 8. Schematics and Troubleshooting,
Schematic 4,
Reverse locations of R23 and C7.
Schematic 6,
Add C8, 1000pf capacitor, in parallel with VR1 as shown in Figure 8.

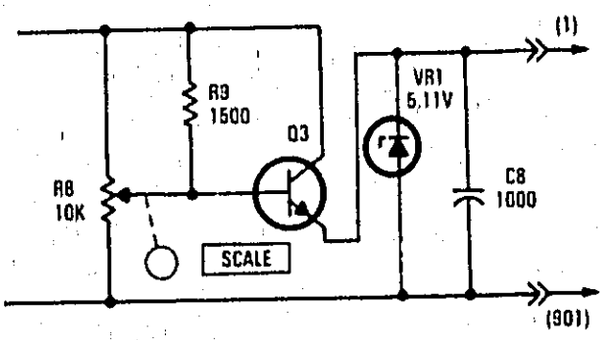

Figure 8.

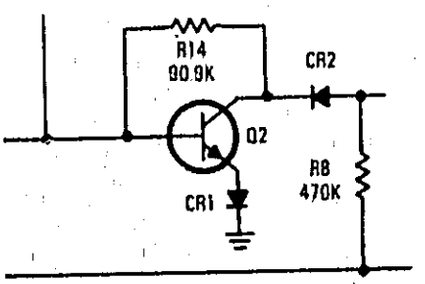

Figure 9.

Schematic 7,
Change: Value of C8 to .1μf.
Add: R14, as shown in Figure 9.

CHANGE 1

NOTE

HP Model 182T Displays with serial numbers prefixed 1705A and above have been modified for use with the HP Model 8750A Storage - Normalizer. This modification increases the effectiveness of the Display with Models 8557A, 8558B, 8755A, and 8755B frequency domain plug-ins. Because of this modification, the performance of real time plug-ins is not guaranteed and their use is not recommended.

The name of Model 182T instruments has been changed from OSCILLOSCOPE to DISPLAY.

Table 6-2,
A8: Change HP Part No. and Mfr Part No. to 00180-66557 and insert table 1 from this manual change sheet into 182T manual.
Add: J6, HP Part No. 1251-2197, CONN 24F CONT, Mfr Code 71785, Mfr Part No. DOM-24W7S.
MP18: Change HP Part No. and Mfr Part No. 00182-60041.
MP29: Change HP Part No. and Mfr Part No. to 00182-00223.

CHANGE 1 (Cont'd)

Table 6-2 (Cont'd),

Add: W9, HP Part No. 00182-61619, CABLE ASSY: COAX AUX A, Mfr Code 28480, Mfr Part No. 00182-61619.
Add: W10, HP Part No. 00182-61620, CABLE ASSY: COAX AUX B, Mfr Code 28480, Mfr Part No. 00182-61620.
Add: W11, HP Part No. 00182-61621, CABLE ASSY: COAX X-NORM, Mfr Code 28480, Mfr Part No. 00182-61621.
Add: W12, HP Part No. 00182-61622, CABLE ASSY: COAX Y-NORM, Mfr Code 28480, Mfr Part No. 00182-61622.
Add: W13, HP Part No. 00182-61623, CABLE ASSY: COAX H-BLANK, Mfr Code 28480, Mfr Part No. 00182-61623.
Add: W14, HP Part No. 00182-61625, CABLE ASSY: COAX INT SWP, Mfr Code 28480, Mfr Part No. 00182-61625.
Add: W15, HP Part No. 00182-61627, CABLE ASSY: COAX: SWP RTN, Mfr Code 28480, Mfr Part No. 00182-61627.
Add: W16, HP Part No. 00182-61624, CABLE ASSY: COAX AUX C/BLANKING IN, Mfr Code 28480, Mfr Part No. 00182-61624.
Add: W17, HP Part No. 00182-61626, CABLE ASSY: COAX Y-NORM J1, Mfr Code 28480, Mfr Part No. 00182-61626.
Add: W18, HP Part No. 00182-61628, CABLE ASSY: 8750A MOLEX INTERCONNECT, Mfr Code 28480, Mfr Part No. 00182-61628.

Page 8-15, figure 8-5,
Make changes shown in figure 1 of this manual change sheet.
Page 8-19, figures 8-9 and 8-10.
Replace with figures 2 through 4 from this manual change sheet.
Page 8-30, figure 8-21,
Replace with figure 5 from this manual change sheet.

CHANGE 2

Table 6-2,
A8: Change HP Part No. and Mfr Part No. to 00182-66519 and insert table 2 from this manual change sheet into 182T manual.
Figure 8-9 (page 8-19),
Replace with figure 6 from this manual change sheet.
Figure 8-10 (page 8-19),
Replace with figure 7 from this manual change sheet.

CHANGE 3

Table 6-2. Replaceable Parts,
Change: A10 HP and Mfr Part No. 00182-66521.
Add: A10R14, HP Part No. 0757-0464, RESISTOR-FXD 90.9K 1% .125W F TC=0+-100, Mfr Code 24546, Mfr Part No. C4-1/8-TO-9092-F.
Figure 8-19. A10 Component Locator,
Add: R14 above and between Q2 and Q3, horizontal to edge of circuit board, at grid location B-3.
Figure 8-20. Schematic 7,
Add: A10R14, 90.9K, between base and collector of A10Q2.

CHANGE 4

Section 2. Installation,
Paragraph 2.2.,
Add: This apparatus has been built and tested in accordance with IEC Publication 348: "Safety Requirements for Electronic Measuring Apparatus", and has been supplied in good working condition. The present instruction manual contains information and warnings which must be followed by the user to assure the operation of the apparatus and to maintain it in good working condition as far as safety is concerned.

▲ Change 4 (Cont'd)

Table 6-2. Replaceable Parts,

Change: A2 HP Part and Mfr No. to 00182-60045.
Change: A2MP3 HP Part and Mfr No. to 00182-60207.
Change: A2MP4 HP Part and Mfr No. to 00182-01214.
Change: A2MP5 HP Part and Mfr No. to 0370-2891.
Change: A2MP6, HP Part to 0370-2890, PUSHBUTTON 0.230 IN SQ; 0.425 IN HGT, Mfr Code 28480, Mfr Part No. 0370-2890.
Change: A2S1, HP Part No. 3101-2080, RKR BASIC DPDT 3A 250 VAC SLDR-LUG, Mfr Code 28480,Mfr Part No. 3101-2080.
Change: A4 HP Part and Mfr No. to 00182-60046.
Delete: A4XF1.
Add: A4XF1A, HP Part No. 2110-0565, FUSEHOLDER CAP 12A MAX FOR UL, Mfr Code 28480, Mfr Part No. 2110-0565.
Add: A4XF1B, HP Part No. 2110-0566, FUSEHOLDER-EXTR POST 12A 250V, Mfr Code 28480, Mfr Part No. 2110-0566.
Add: A4XF1C, HP Part No. 2110-0569, NUT-FUSEHOLDER THREAD M 12.7X1.5DBL, Mfr Code 28480, Mfr Part No. 2110-0569.
Change: A4MP1 HP Part and Mfr No. to 00182-60208.
Change: A4S1, HP Part No. 3101-2299, SWITCH-SL DPDT STD 5A 250 VAC SLDR-LUG, Mfr Code 28480, Mfr Part No. 3101-2299.

Table 1. Replaceable Parts for A8, Normalizer Interface (00180-66557)

Ref Desig	HP Part No.	TQ	Description	Mfr Code	Mfr Part No.
A8	00180-66557		BOARD ASSY:NORMALIZER INTERFACE	28480	00180-66557
A8C1	0160-2259	1	C:FXD CER 12 PF 5% 100VDCW	28480	0160-2259
A8C2	0160-3451	1	C:FXD CER 0.01 UF +80–20% 100VDCW	56289	C023B101F-103ZS25-CD
A8CR1	1901-0050	1	DIODE-SWITCHING 2NS 80V 200MA	28480	1901-0050
A8J1	1250-0257	1	J:RF SMB M PC	28480	1250-0257
A8L1	9140-0144	2	L:FXD RF CHOKE 4.7 UH 10%	24226	10/471
A8L2	9140-0144		L:FXD RF CHOKE 4.7 UH 10%	24226	10/471
A8P1	1251-3975	1	P:8-PIN MALE POST TYPE	27264	22-03-1081
A8Q1	1854-0404	2	Q:SI NPN	28480	1854-0404
A8Q2	1855-0241	4	Q:SI FET MOS N-CHAN E-MODE	02910	SD215
A8Q3	1853-0034	1	Q:SI PNP	28480	1853-0034
A8Q4	1855-0241		Q:SI FET MOS N-CHAN E-MODE	02910	SD215
A8Q5	1854-0404		Q:SI NPN	28480	1854-0404
A8Q6	1855-0241		Q:SI FET MOS N-CHAN E-MODE	02910	SD215
A8Q7	1855-0241		Q:SI FET MOS N-CHAN E-MODE	02910	SD215
A8R1	0698-3152	1	R:FXD MET FLM 3480 OHM 1% 1/8W	16299	C4-1/8-T0-3481-F
A8R2	0757-0438	2	R:FXD MET FLM 5110 OHM 1% 1/8W	28480	0757-0438
A8R3	0757-0465	2	R:FXD MET FLM 100K OHM 1% 1/8W	28480	0757-0465
A8R4	0698-3266	1	R:FXD MET FLM 237K OHM 1% 1/8W	16299	C4-1/8-T0-2373-F
A8R5	0757-0438		R:FXD MET FLM 5110 OHM 1% 1/8W	28480	0757-0438
A8R6	0757-0199	4	R:FXD MET FLM 21.5K 1% 1/8W	24546	C4-1/8-T0-2152-F
A8R7	0757-0458	2	R:FXD MET FLM 51.1K OHM 1% 1/8W	28480	0757-0458
A8R8	0757-0199		R:FXD MET FLM 21.5K 1% 1/8W	24546	C4-1/8-T0-2152-F
A8R9	0757-0458		R:FXD MET FLM 51.1K OHM 1% 1/8W	28480	0757-0458
A8R10	0757-0199		R:FXD MET FLM 21.5K 1% 1/8W	24546	C4-1/8-T0-2152-F
A8R11	0757-0199		R:FXD MET FLM 21.5K 1% 1/8W	24546	C4-1/8-T0-2152-F
A8R12	0757-0280	1	R:FXD MET FLM 1K OHM 1% 1/8W	28480	0757-0280
A8R13	0757-0465	1	R:FXD MET FLM 100K OHM 1% 1/8W	28480	0757-0465
A8VR1	1902-3082		VR:BREAKDOWN 4.64V 5% 0.4W	04713	SZ10939-86

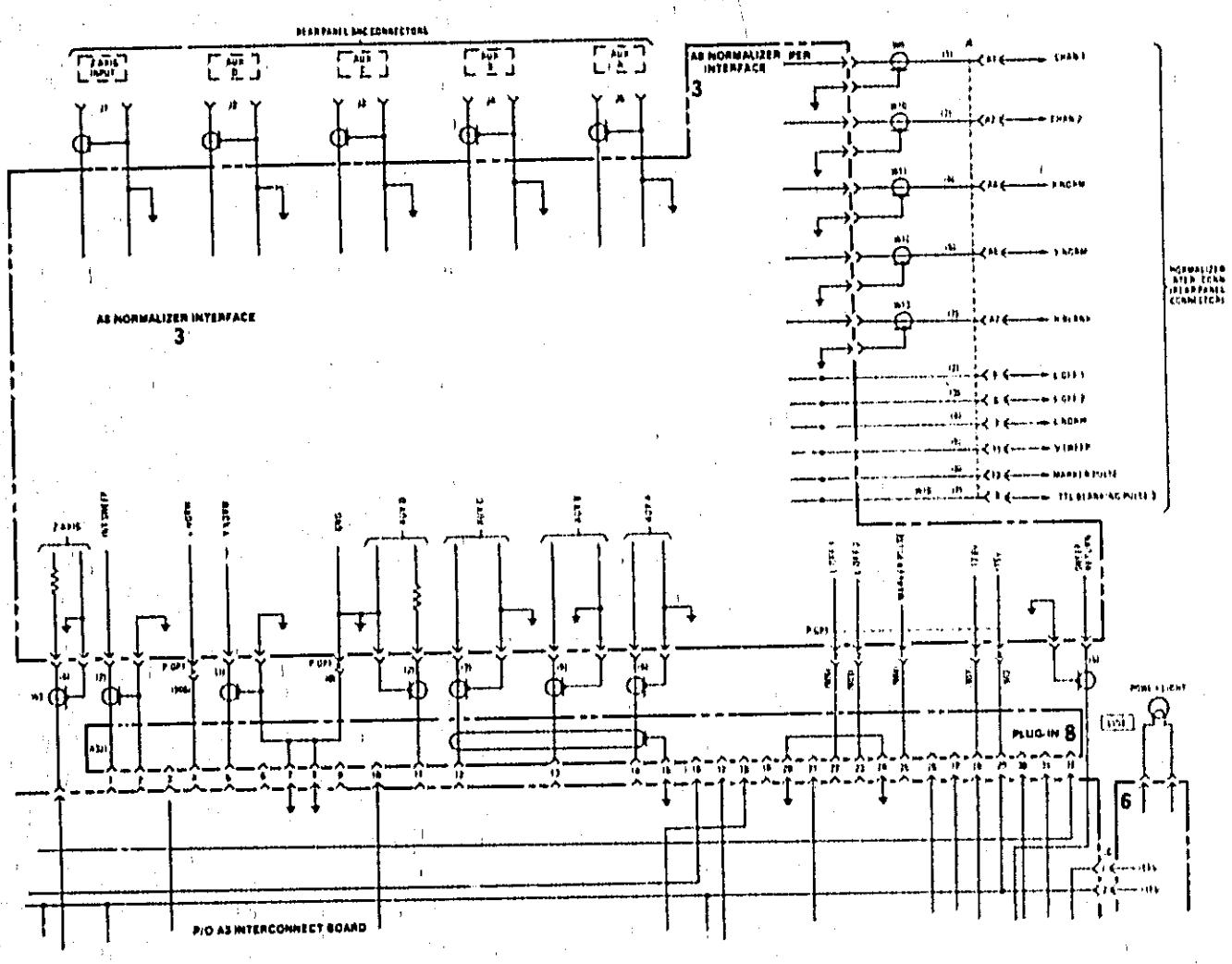

Figure 1. Changes to Figure 8-5, Mainframe Wiring Diagram (Schematic 1)

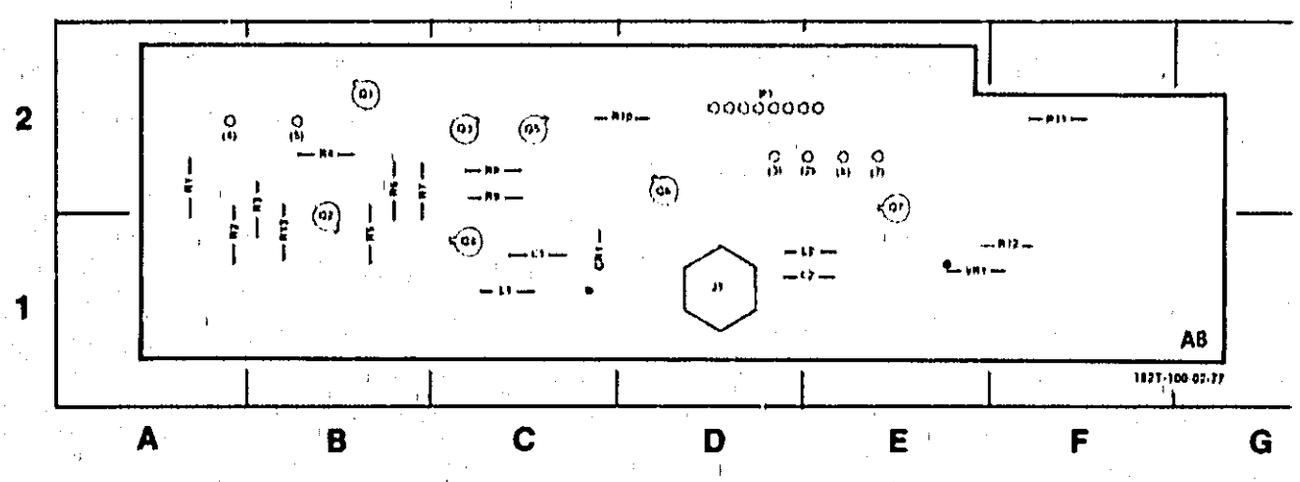

REF DESIG	GRID LOC	REF DESIG	GRID LOC	REF DESIG	GRID LOC	REF DESIG	GRID LOC	REF DESIG	GRID LOC	REF DESIG	GRID LOC	REF DESIG	GRID LOC
C1	C-1	L1	C-1	Q2	B-1	Q6	D-2	R3	B-2	R7	B-2	R11	F-2
C2	E-1	L2	E-1	Q3	C-2	Q7	E-2	R4	B-2	R8	C-2	R12	F-1
CR1	C-1	P1	D-2	Q4	C-1	R1	A-2	R5	B-1	R9	C-2	R13	B-1
J1	D-1	Q1	B-2	Q5	C-2	R2	A-1	R6	B-2	R10	D-2	VR1	E-1

Figure 2. Normalizer Interface Component Identification

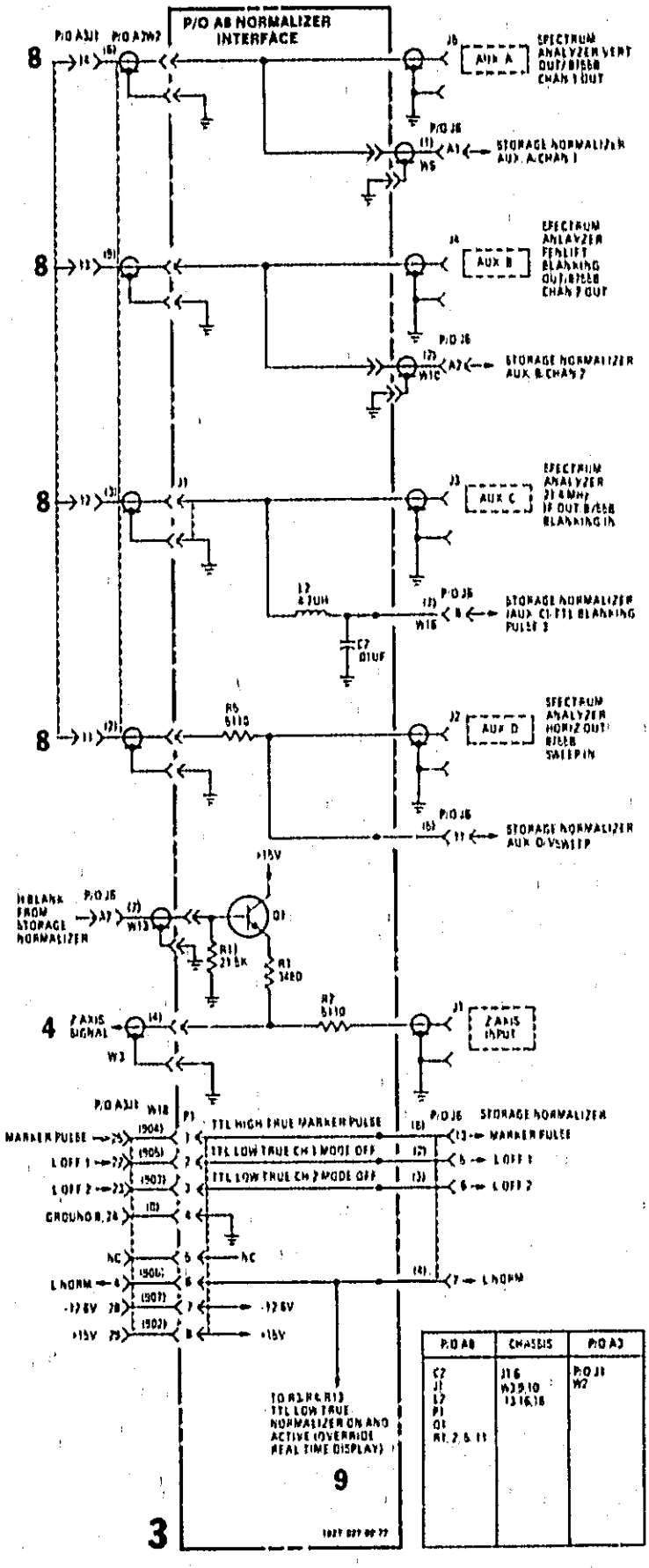

Figure 3. Normalizer Interface Schematic (Sheet 1 of 2)

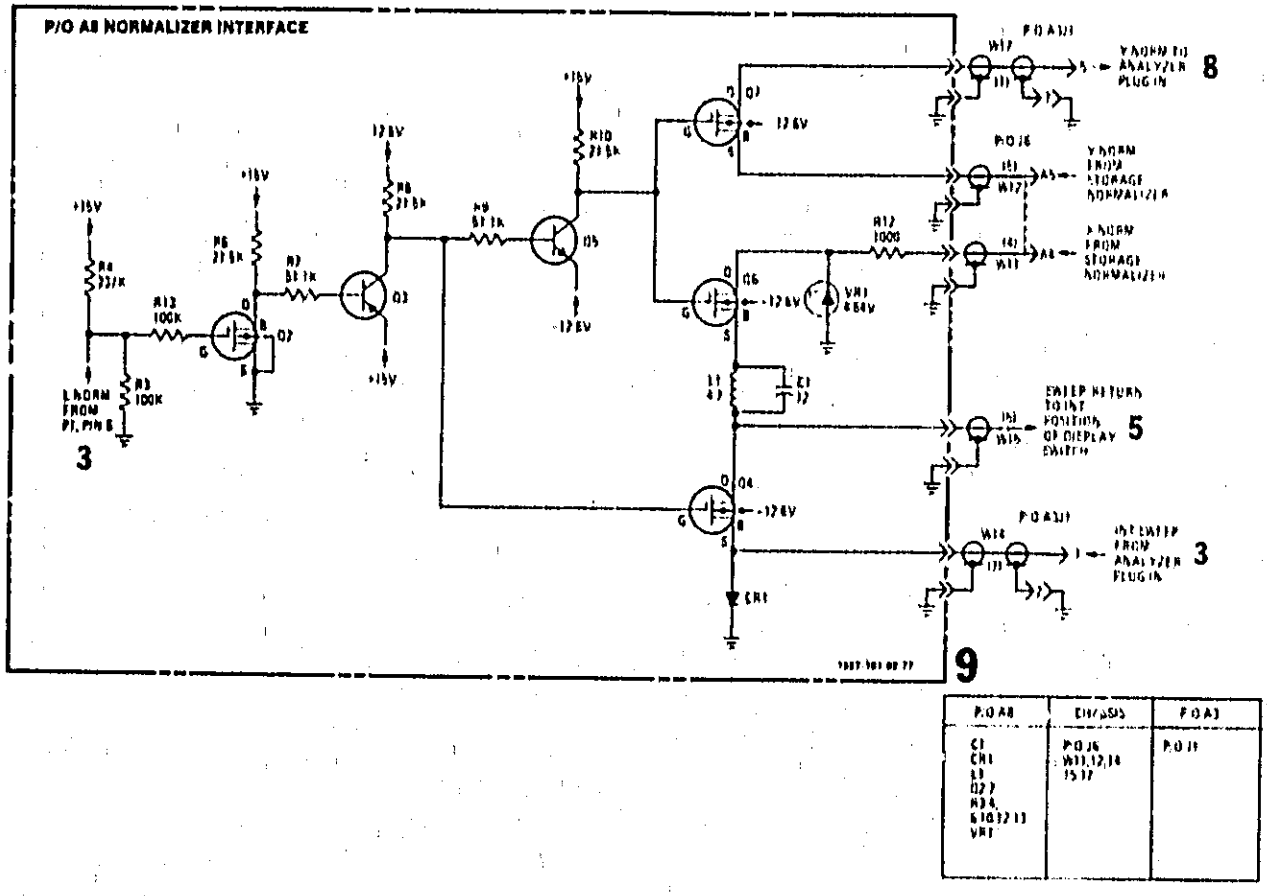

P.O A8	EH/SS5	P.O A3
C1 CR1 R3 Q7 R34 R10,12,13 VR1	P.O J6 W11,12,14 15,17	P.O J1

Figure 4. Normalizer Interface Schematic (Sheet 2 of 2)

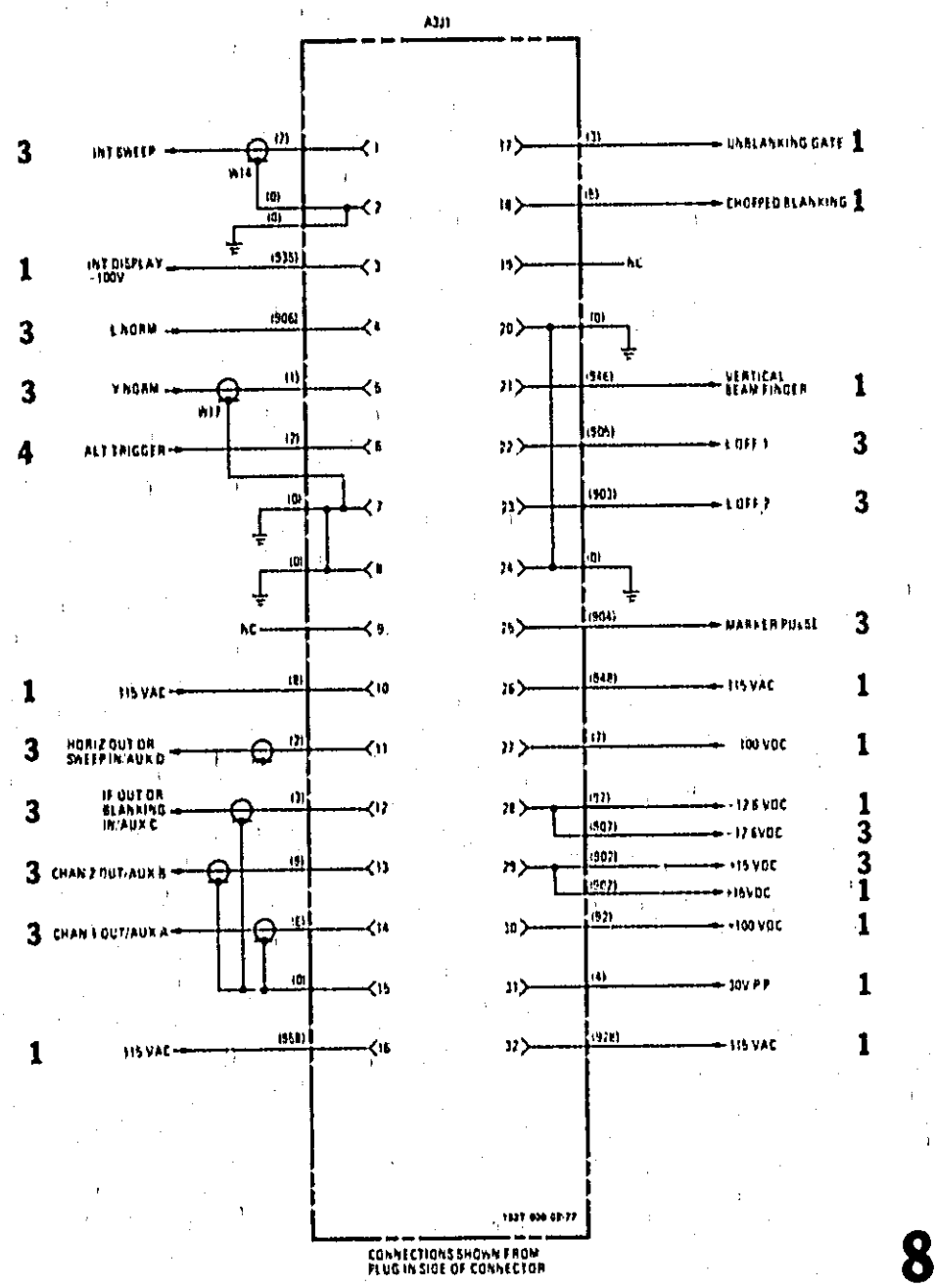

8

Figure 5. Analyzer Plug-in Connections

Table 2. Replaceable Parts for A8, Normalizer Interface (00182-66519)

Ref Desig	HP Part No.	TQ	Description	Mfr Code	Mfr Part No.
A8	00182-66519	1	BOARD ASSY:NORMALIZER INTERFACE	28480	00182-66519
A8C1	0160-2259	1	C:FXD CER 12 PF 5% 500VDCW	28480	0160-2259
A8C2	0160-3451	1	C:FXD CER 0.01 UF +80−20% 100VDCW	56289	C023B101F-103ZS25-CD
A8CR1	1901-0050	3	DIODE-SWITCHING 2NS 80V 200MA	28480	1901-0050
A8CR2	1901-0050		DIODE-SWITCHING 2NS 80V 200MA	28480	1901-0050
A8CR3	1901-0050		DIODE-SWITCHING 2NS 80V 200MA	28480	1901-0050
A8J1	1250-0257	1	J:RF SMB M PC	28480	1250-0257
A8L1	9140-0144	2	L:FXD RF CHOKE 4.7 UH 10%	24226	10/471
A8L2	9140-0144		L:FXD RF CHOKE 4.7 UH 10%	24226	10/471
A8P1	1251-3975	1	P:8-PIN MALE POST TYPE	27264	22-03-1081
A8Q1	1854-0404	3	Q:SI NPN	28480	1854-0404
A8Q2	1854-0404		Q:SI NPN	28480	1854-0404
A8Q3	1853-0034	1	Q:SI PNP	28480	1853-0034
A8Q4	1855-0020	3	Q:SI J-FET N-CHAN D-MODE	28480	1855-0020
A8Q5	1855-0020		Q:SI J-FET N-CHAN D-MODE	28480	1855-0020
A8Q6	1855-0404		Q:SI NPN	28480	1855-0404
A8Q7	1855-0020		Q:SI J-FET N-CHAN D-MODE	28480	1855-0020
A8R1	0698-3454	1	RESISTOR 215K 1% .125W F TC=0+−100	24546	C4-1/8-T0-2153-F
A8R2	0757-0438	4	R:FXD MET FLM 5110 OHM 1% 1/8W	24546	C4-1/8-T0-5111-F
A8R3	0757-0438		R:FXD MET FLM 5110 OHM 1% 1/8W	24546	C4-1/8-T0-5111-F
A8R4	0757-0199	4	R:FXD MET FLM 21.5K OHM 1% 1/8W	24546	C4-1/8-T0-2152-F
A8R5	0757-0438		R:FXD MET FLM 5110 OHM 1% 1/8W	24546	C4-1/8-T0-5111-F
A8R6	0757-0199		R:FXD MET FLM 21.5K OHM 1% 1/8W	24546	C4-1/8-T0-2152-F
A8R7	0757-0458	2	R:FXD MET FLM 51.1K OHM 1% 1/8W	28480	0757-0458
A8R8	0757-0442	2	RESISTOR: 10K 1% .125W F TC=0+−100	24546	C4-1/8-T0-1002-F
A8R9	0757-0458		R:FXD MET FLM 51.1K OHM 1% 1/8W	28480	0757-0458
A8R10	0757-0199		R:FXD MET FLM 21.5K OHM 1% 1/8W	24546	C4-1/8-T0-2152-F
A8R11	0757-0199		R:FXD MET FLM 21.5K 1% 1/8W	24546	C4-1/8-T0-2152-F
A8R12	0757-0280	1	R:FXD MET FLM 1K OHM 1% 1/8W	28480	0757-0280
A8R13	0757-0442		RESISTOR: 10K 1% .125W F TC=0+−100	24546	C4-1/8-T0-1002-F
A8R14	0757-0465	2	R:FXD MET FLM 100K OHM 1% 1/8W	24546	C4-1/8-T0-1003-F
A8R15	0757-0465		R:FXD MET FLM 100K OHM 1% 1/8W	24546	C4-1/8-T0-1003-F
A8R16	0698-3152	1	R:FXD MET FLM 3840 OHM 1% 1/8W	16299	C4-1/8-T0-2373-F
A8R17	0757-0438		R:FXD MET FLM 5110 OHM 1% 1/8W	24546	C4-1/8-T0-5111-F

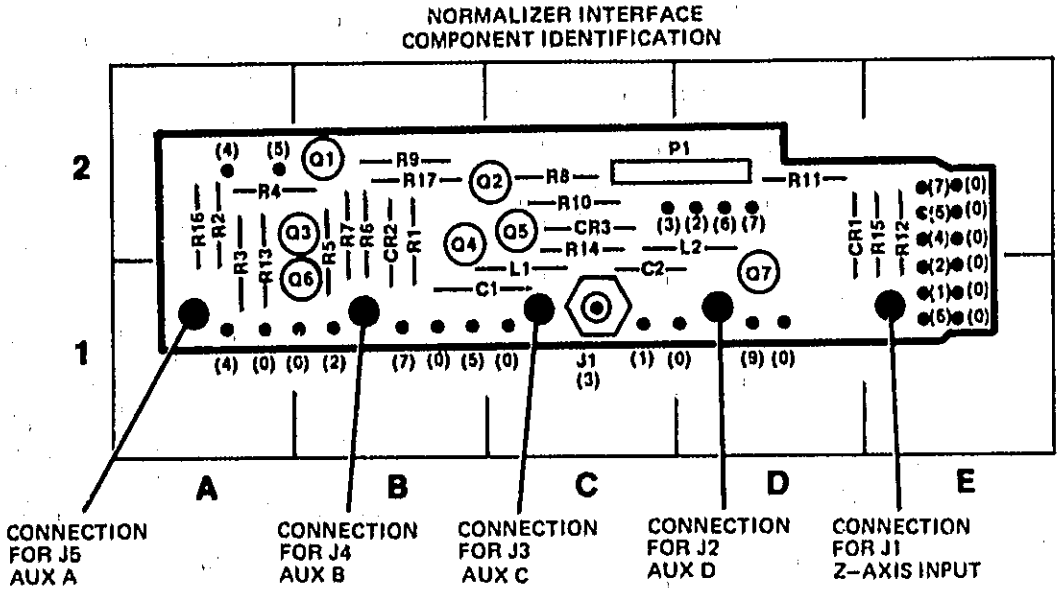

Figure 6. Replacement for Figure 8-9.

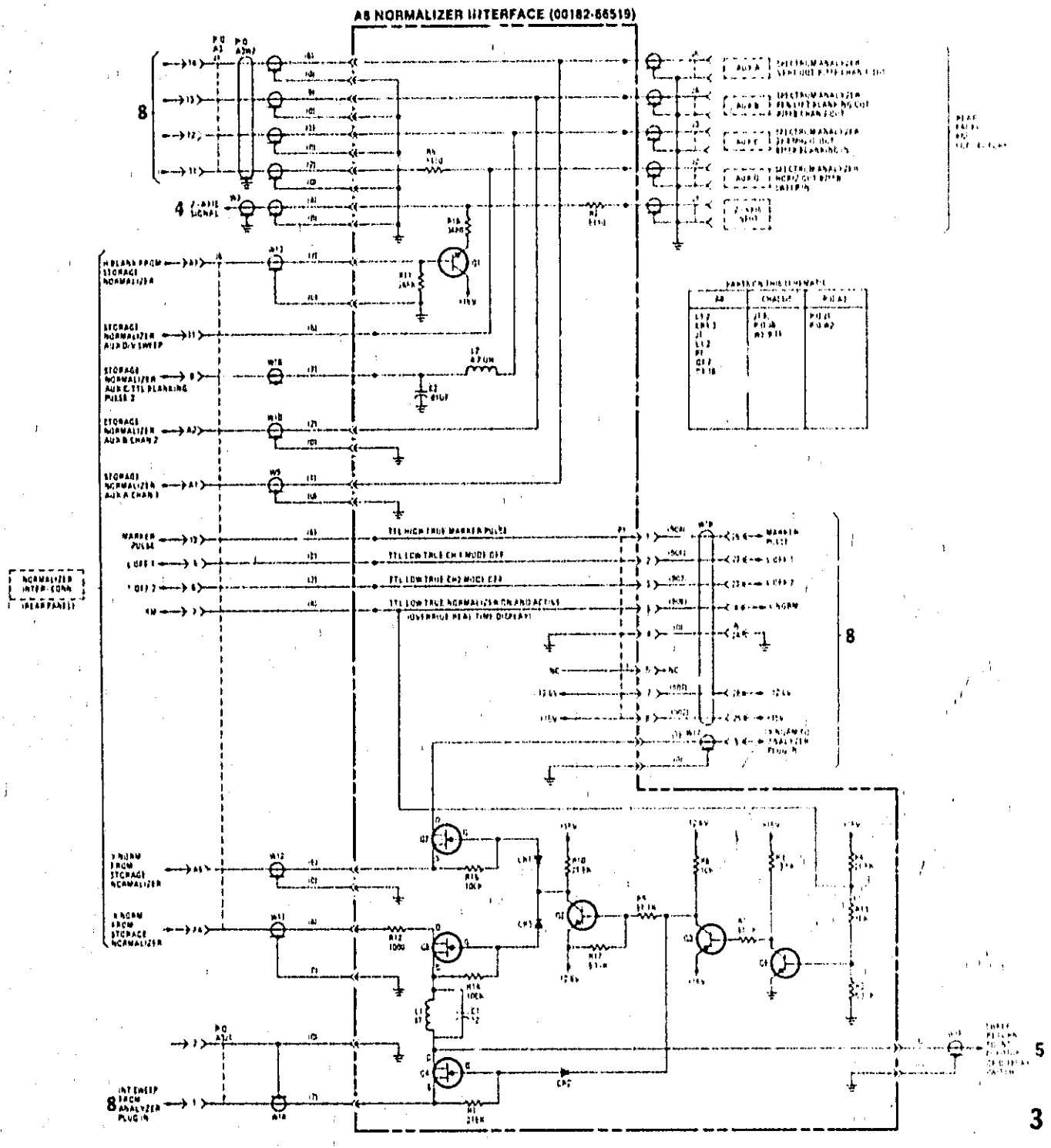

Figure 7. Replacement for Figure 8-10 (Schematic 3)