AC Board
Diagram 2
Top and bottom side 3

AT Board
Diagram 4
Top and bottom side 5

RA Board
Diagram 6
Top and bottom side 7

RB Board
Diagram 8
Top and bottom side 9

TG Board
Diagram 10-11
Top and bottom side 12

Digital Board
Diagram 13-18
Top side 19
Bottom side 20

FC Board
Diagram 21-22
Top side 23
Bottom side 24

XY Board
Diagram 25-26
Top side 27
Bottom side 28

ZF Board
Diagram 29-30
Top side 31
Bottom side 32

CRT Board
Diagram 33
Top and bottom side 34

PS Board
Diagram 35
Top side 36
Bottom side 37

PSP and PSS Board
Top side 38

PA Board
Diagram 39
Top and bottom side 40

Service Manual
Circuit Diagrams

HM5012/14

St. 030998. fell/goRR

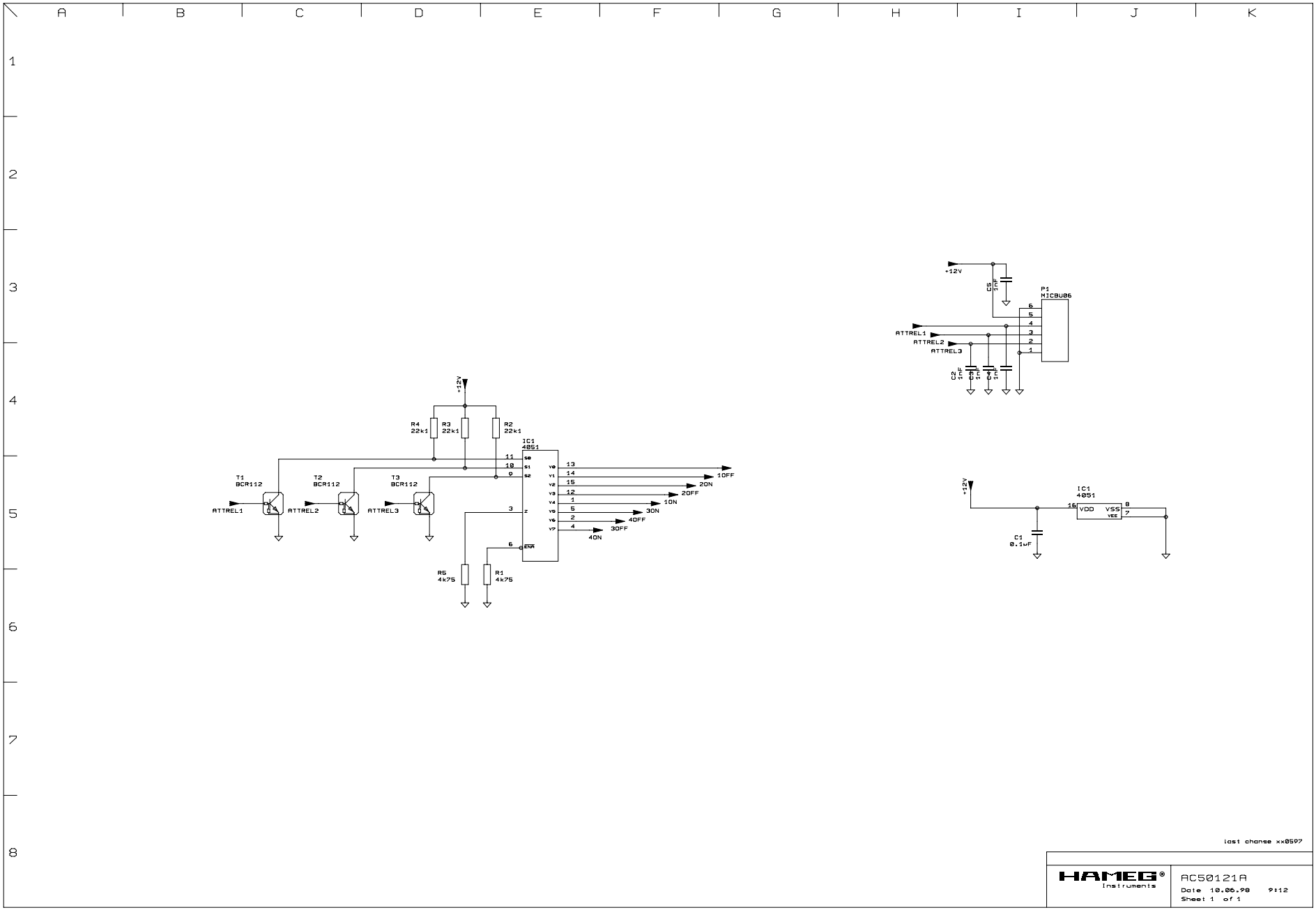
A
B
C
D
E
F
G
H
I
J
K
1
2
3
4
5
6
7
8
+12V
R4
22k1
R3
22k1
R2
22k1
IC1
4051
T1
BCR112
T2
BCR112
T3
BCR112
ATTREL1
ATTREL2
ATTREL3
1OFF
2ON
2OFF
1ON
3ON
4OFF
3OFF
4ON
R5
4k75
R1
4k75
C5
1nF
P1
MICBU06
C2
1nF
C3
1nF
C4
1nF
C1
0.1uF
VDD
VSS
VEE
last change xx0597
HAMEG®
Instruments
HC50121A
Date 10.06.98 9:12
Sheet 1 of 1

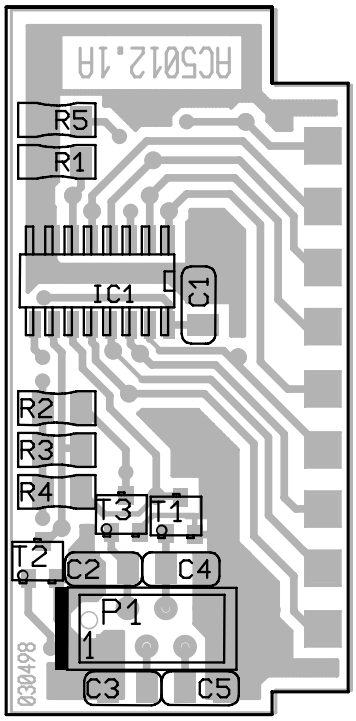
R5
R1
IC1
C1
R2
R3
R4
T3
T1
T2
C2
C4
P1
1
C3
C5
030498

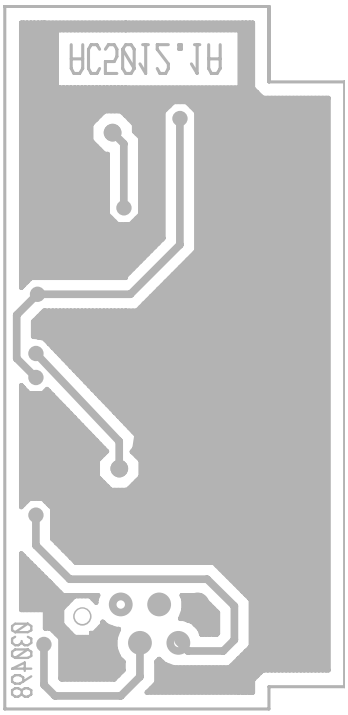

AT Board - Diagram

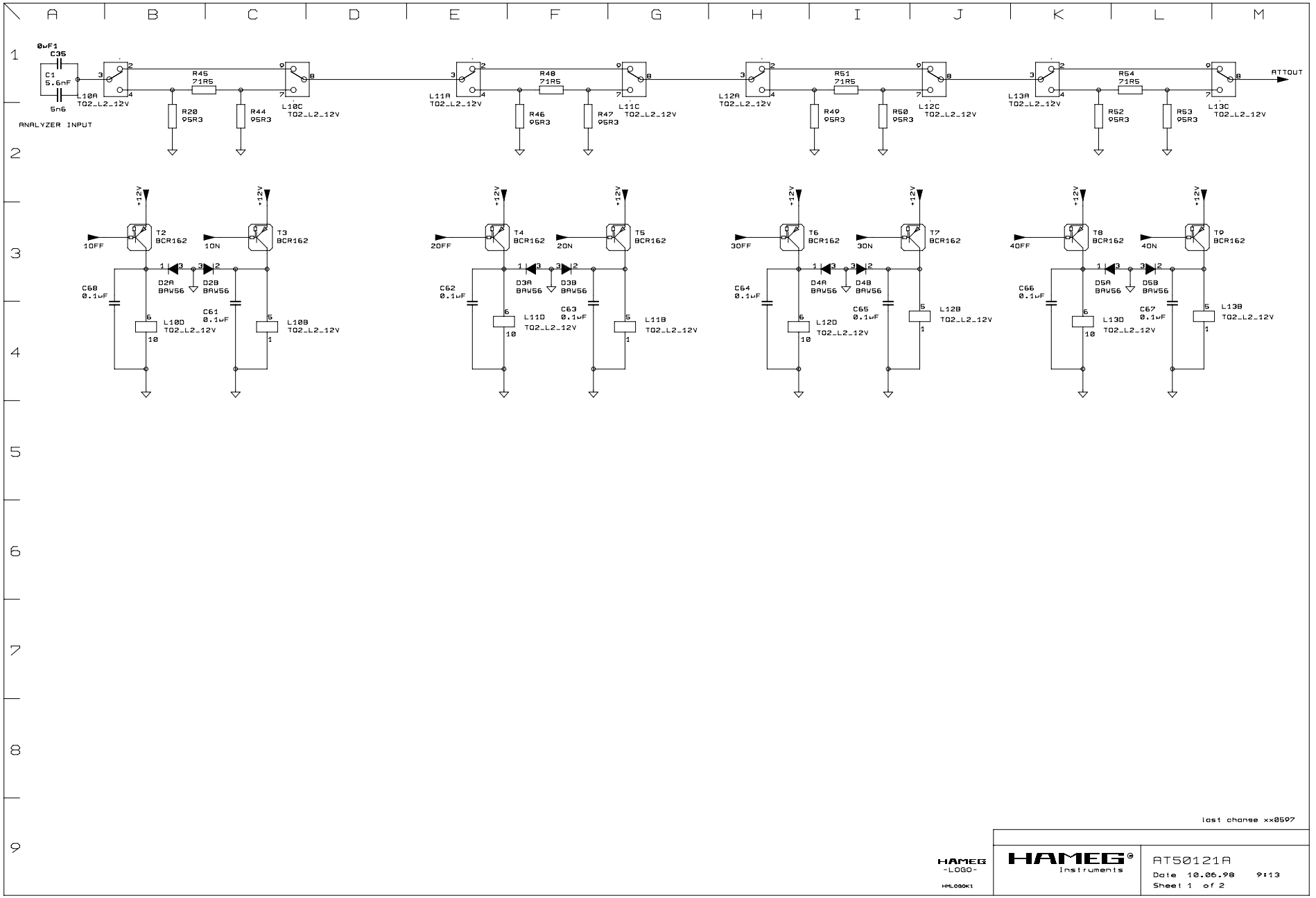

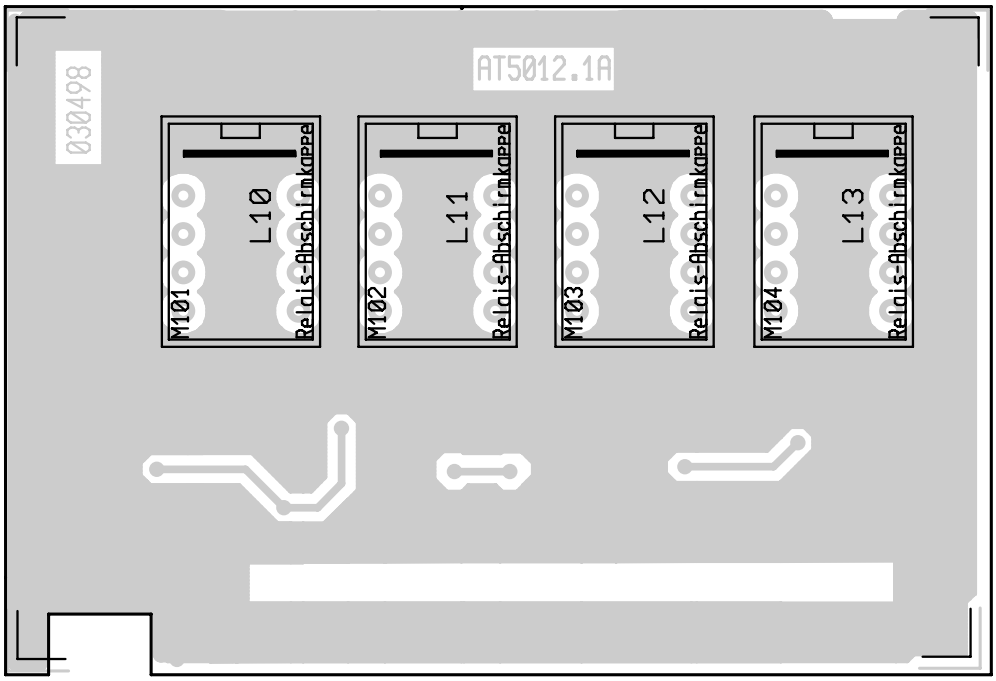
AT5012.1A
030498
L10
L11
L12
L13
M101
M102
M103
M104
Relais-Abschirmkappe
Relais-Abschirmkappe
Relais-Abschirmkappe
Relais-Abschirmkappe

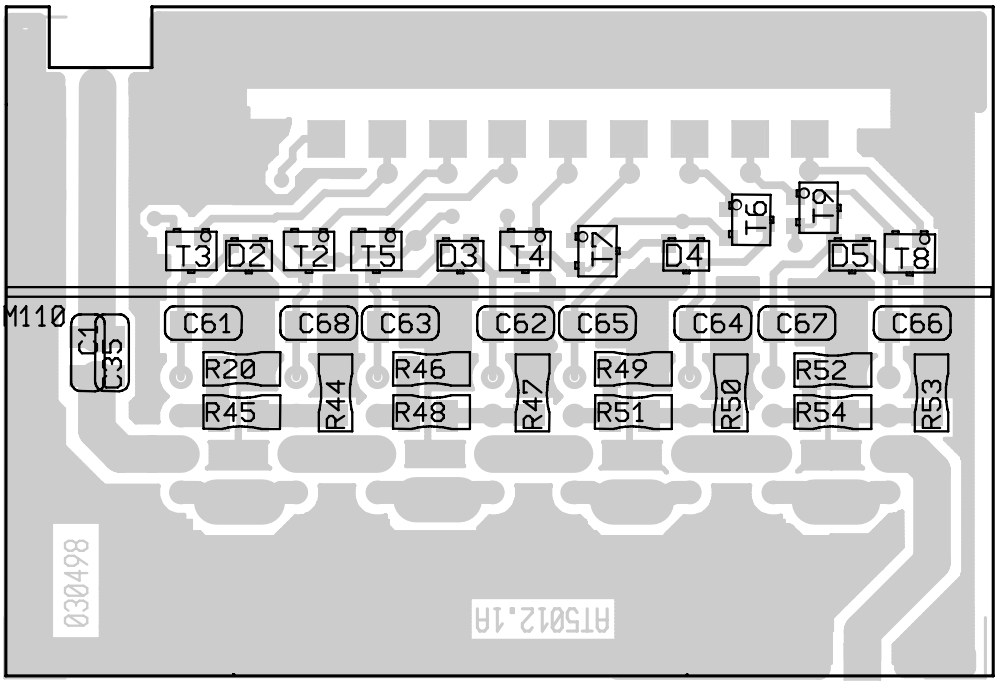
T3
D2
T2
T5
D3
T4
T7
D4
T6
T9
D5
T8
M110
C1
C35
C61
C68
C63
C62
C65
C64
C67
C66
R20
R45
R44
R46
R48
R47
R49
R51
R50
R52
R54
R53
030498
AT5012.1A

RA Board - Diagram

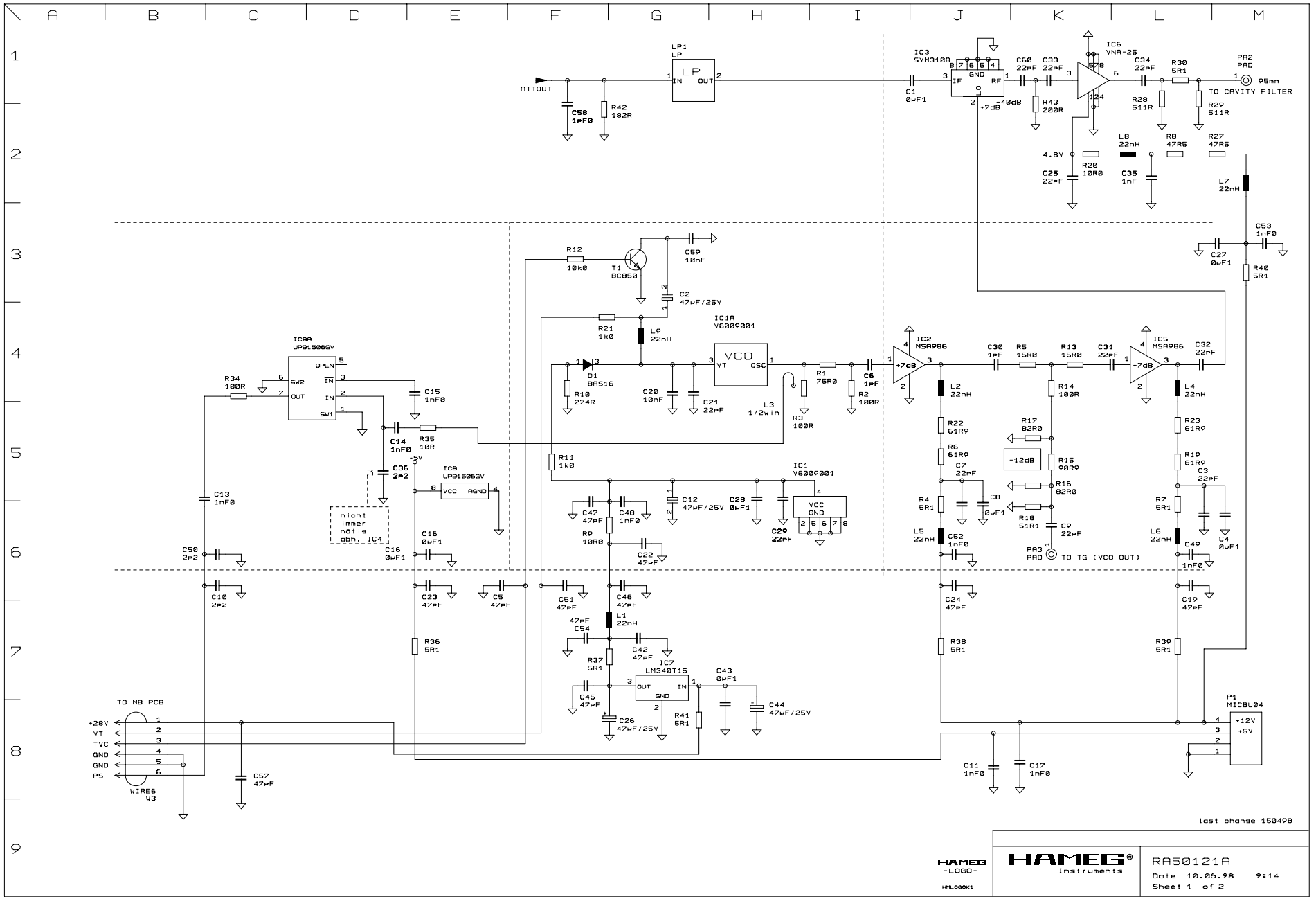

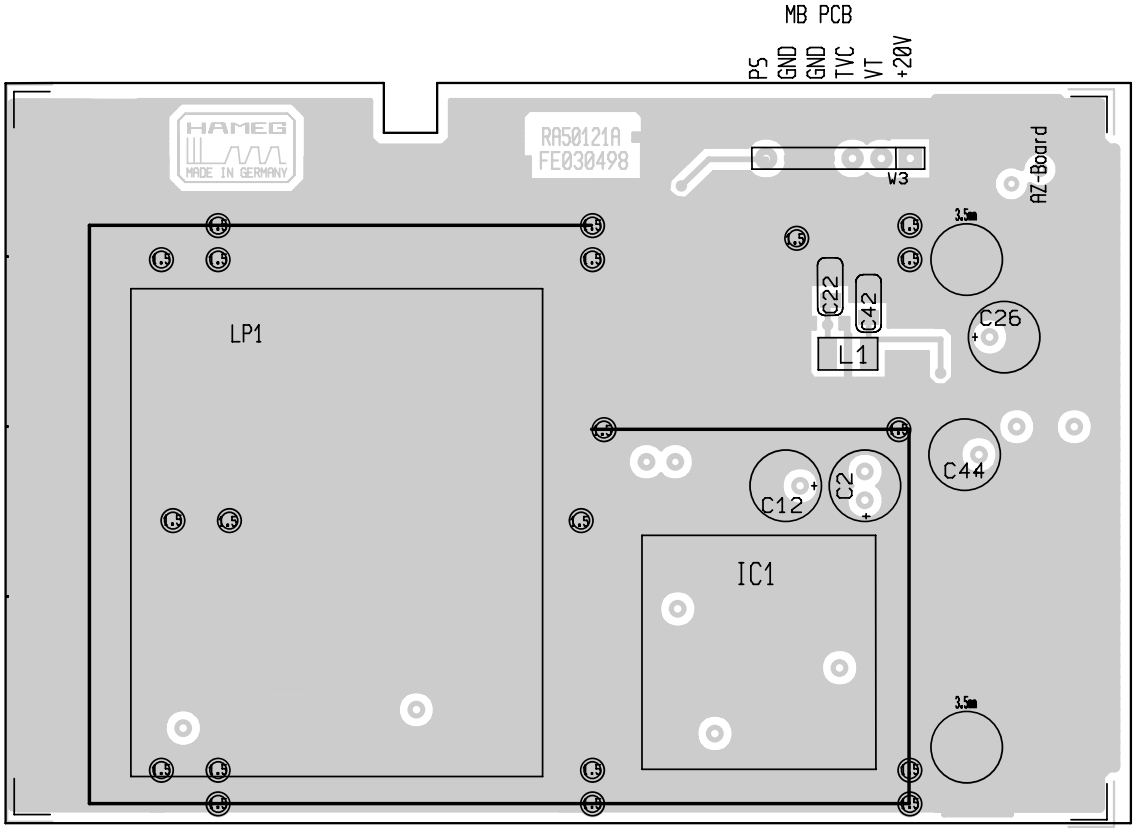
MB PCB
P5
GND
GND
TVC
VT
+20V
HAMEG
MADE IN GERMANY
RA50121A
FE030498
W3
AZ-Board
3.5mm
C22
C42
C26
L1
LP1
C44
C12
C2
IC1
3.5mm

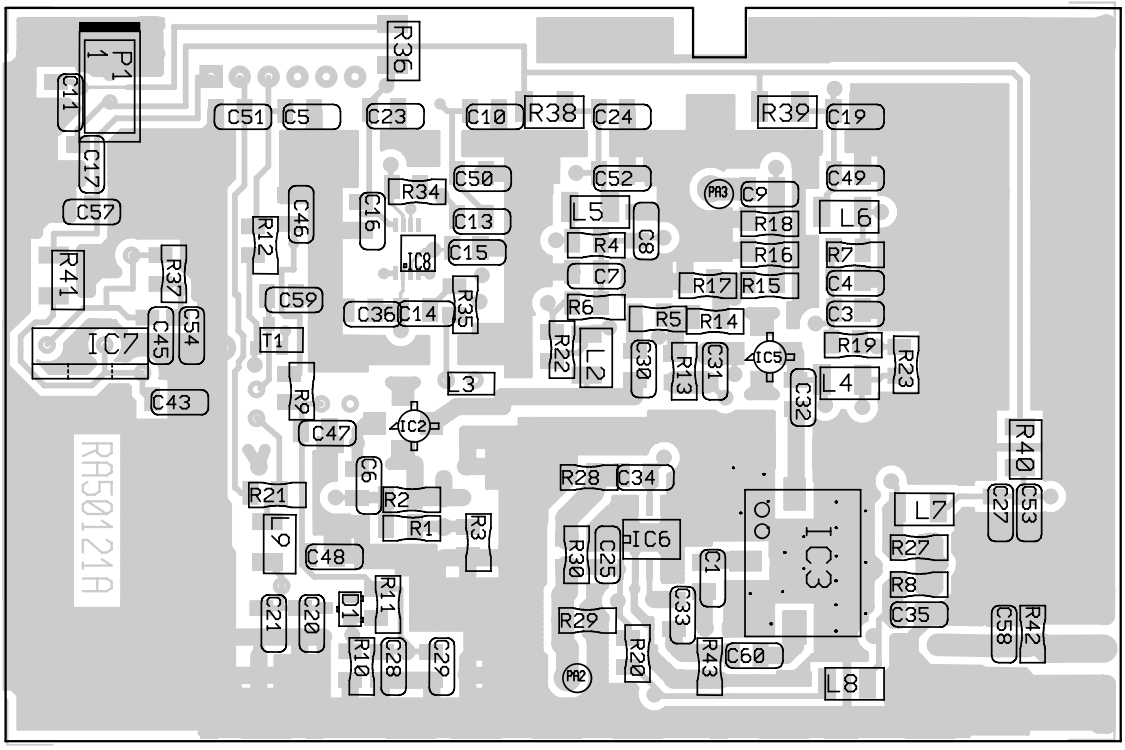
P1
1
C11
C17
C57
R41
R37
IC7
C45
C54
C43
R36
C51
C5
C23
C10
R38
C24
R39
C19
C50
C52
C49
R34
C16
C46
R12
C13
C15
IC8
L5
C8
R4
C7
PA3
C9
R18
L6
R16
R7
R17
R15
C4
C3
C59
C36
C14
R35
R6
R5
R14
T1
R22
L2
C30
R13
C31
IC5
R19
R23
L4
C32
L3
R9
C47
IC2
C6
R28
C34
R40
R21
R2
R1
R3
L9
C48
R30
C25
IC6
C1
IC3
L7
C27
C53
R27
R8
C35
C21
C20
D1
R11
R29
C33
R20
R43
C60
C58
R42
R10
C28
C29
PA2
L8
RA50121A

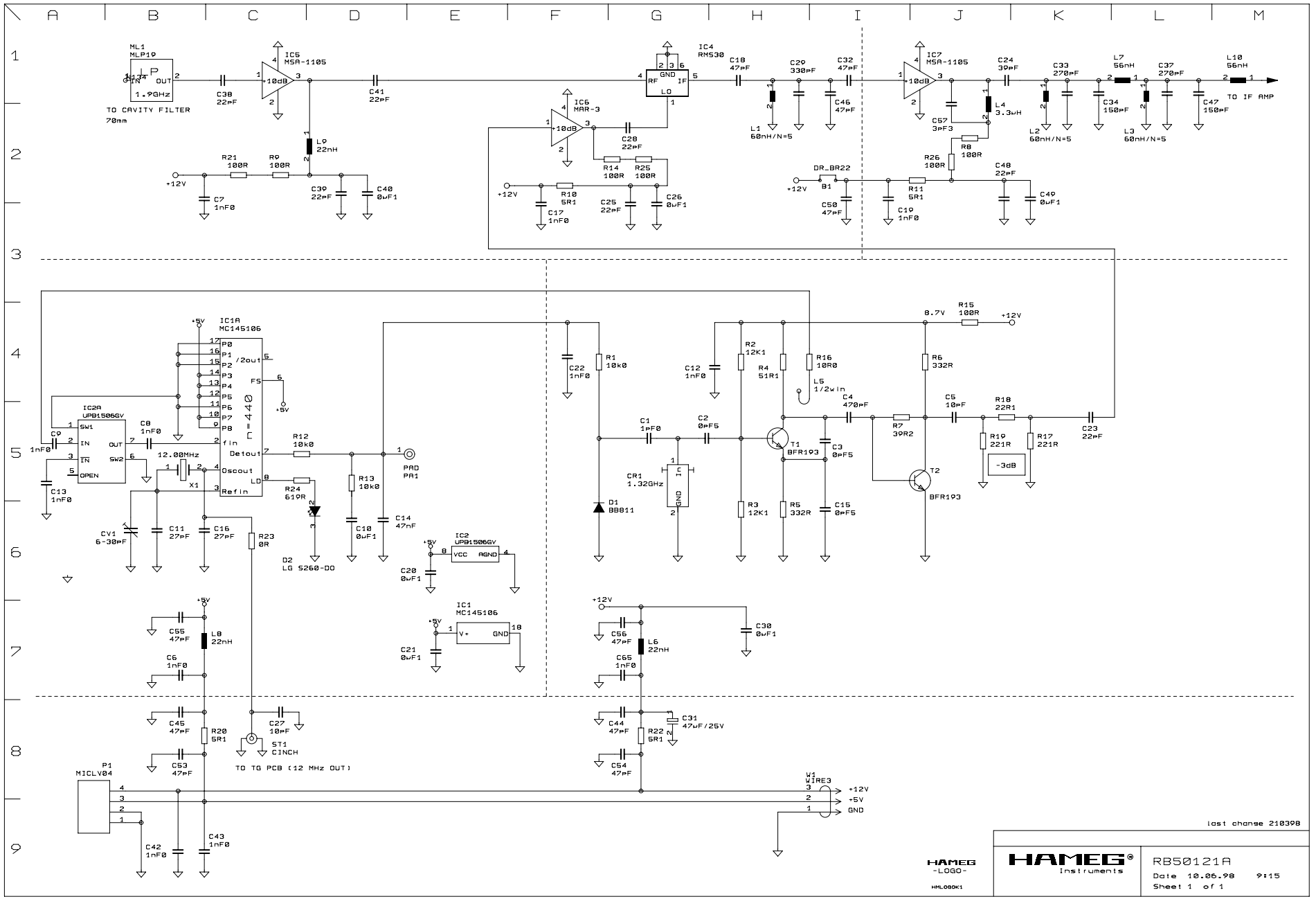
ML1
MLP19
1.9GHz
TO CAVITY FILTER
70mm
C38 22pF
IC5
MSA-1105
+10dB
C41 22pF
L9 22nH
R21 100R
R9 100R
+12V
C7 1nF0
C39 22pF
C40 0µF1
IC4
RMS30
GND
RF
IF
LO
C18 47pF
C29 330pF
C32 47pF
L1 60nH/N=5
C45 47pF
IC6
MAR-3
C28 22pF
R14 100R
R25 100R
R10 5R1
C17 1nF0
C25 22pF
C26 0µF1
IC7
MSA-1105
C24 39pF
C33 270pF
L7 56nH
C37 270pF
L10 56nH
TO IF AMP
L4 3.3uH
C57 3pF3
L2 60nH/N=5
C34 150pF
L3 60nH/N=5
C47 150pF
R8 100R
R26 100R
DR_BR22
B1
R11 5R1
C19 1nF0
C48 22pF
C49 0µF1
C50 47pF
IC1A
MC145106
P0
P1
P2
P3
P4
P5
P6
P7
P8
/2out
fin
Detout
Oscout
LD
Refin
F5
IC2A
UPB1506GV
SW1
IN
OUT
SW2
OPEN
C9 1nF0
C8 1nF0
C13 1nF0
12.00MHz
X1
R12 10k0
R24 619R
R13 10k0
C10 0µF1
C14 47nF
CV1 6-30pF
C11 27pF
C16 27pF
R23 0R
D2
LG S260-DO
PAD
PA1
IC2
UPB1506GV
VCC
AGND
C20 0µF1
IC1
MC145106
V+
GND
C21 0µF1
C22 1nF0
R1 10k0
C12 1nF0
R2 12K1
R4 51R1
R16 10R0
L5 1/2win
R15 100R
8.7V
R6 332R
C4 470pF
C5 10pF
R18 22R1
C23 22pF
C1 1pF0
C2 0pF5
R7 39R2
R19 221R
R17 221R
-3dB
T1
BFR193
C3 0pF5
T2
BFR193
CR1
1.32GHz
D1
BB811
R3 12K1
R5 332R
C15 0pF5
C55 47pF
L8 22nH
C6 1nF0
C56 47pF
L6 22nH
C65 1nF0
C30 0µF1
C45 47pF
R20 5R1
C27 10pF
ST1
CINCH
TO TG PCB (12 MHz OUT)
C53 47pF
C44 47pF
R22 5R1
C31 47µF/25V
C54 47pF
P1
MICLV04
C42 1nF0
C43 1nF0
W1
WIRE3
+12V
+5V
GND
last change 210398
HAMEG
-LOGO-
HAMEG
Instruments
RB50121A
Date 10.06.98 9:15
Sheet 1 of 1

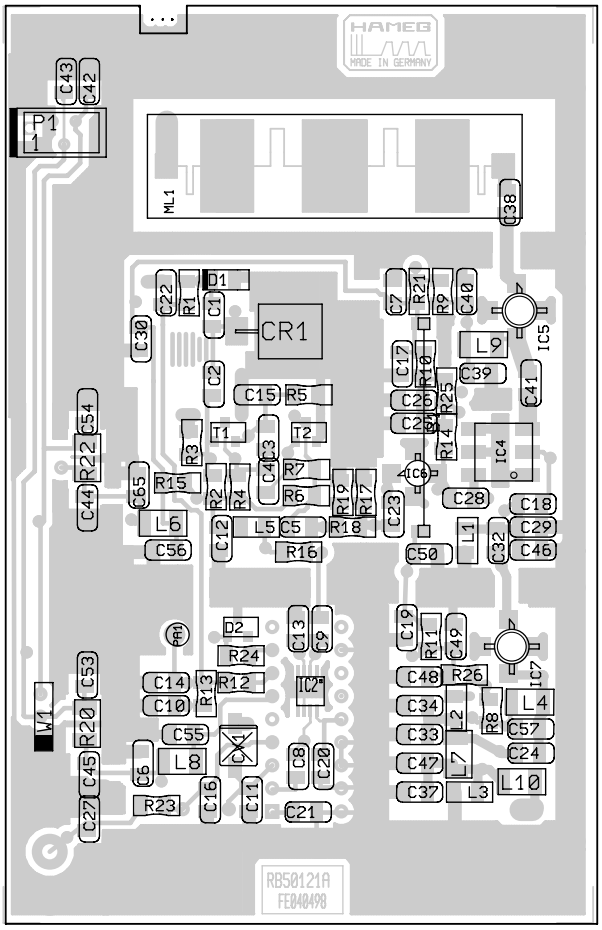
HAMEG
MADE IN GERMANY
P1
1
ML1
C38
C43
C42
C22
R1
D1
C1
C30
CR1
C2
C15
R5
T1
T2
C3
C4
R3
R7
R6
R2
R4
R15
C65
C54
R22
C44
L6
C56
C12
L5
C5
R16
R18
R19
R17
C23
C28
C50
L1
C32
C18
C29
C46
C7
R21
R9
C40
IC5
L9
C39
C41
C17
R10
C26
C25
R25
R24
R14
IC4
IC6
W1
C53
R20
C45
C27
D2
R24
C13
C9
C19
R11
C49
IC7
C14
C10
R13
R12
IC2
R26
C48
C34
C33
C47
C37
L2
L7
L3
R8
L4
C57
C24
L10
C55
L8
CX1
C6
R23
C16
C11
C8
C21
C20
RB50121A
FE040498

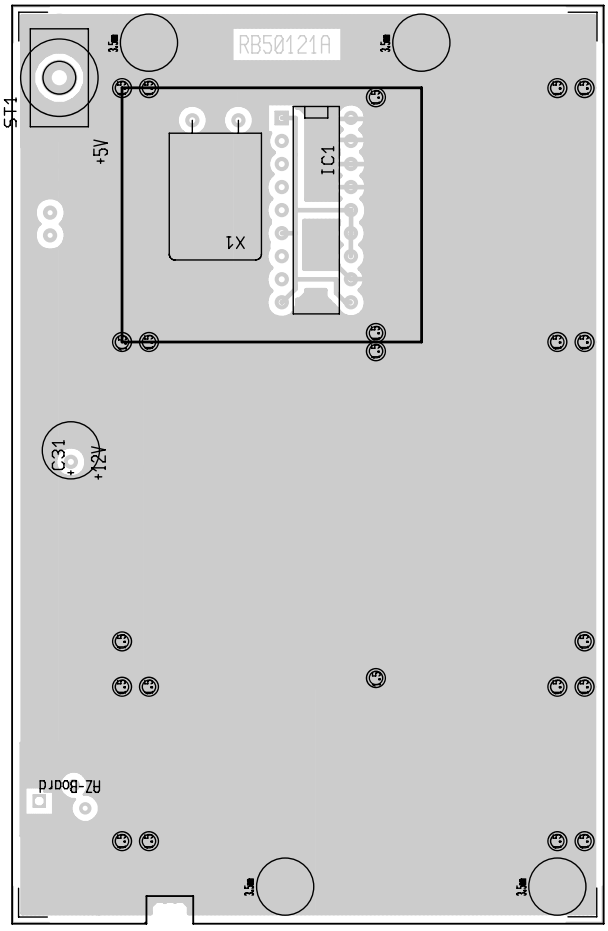
RB50121A
ST1
+5V
IC1
X1
C31
+12V
RZ-Board

TG Board - Diagram

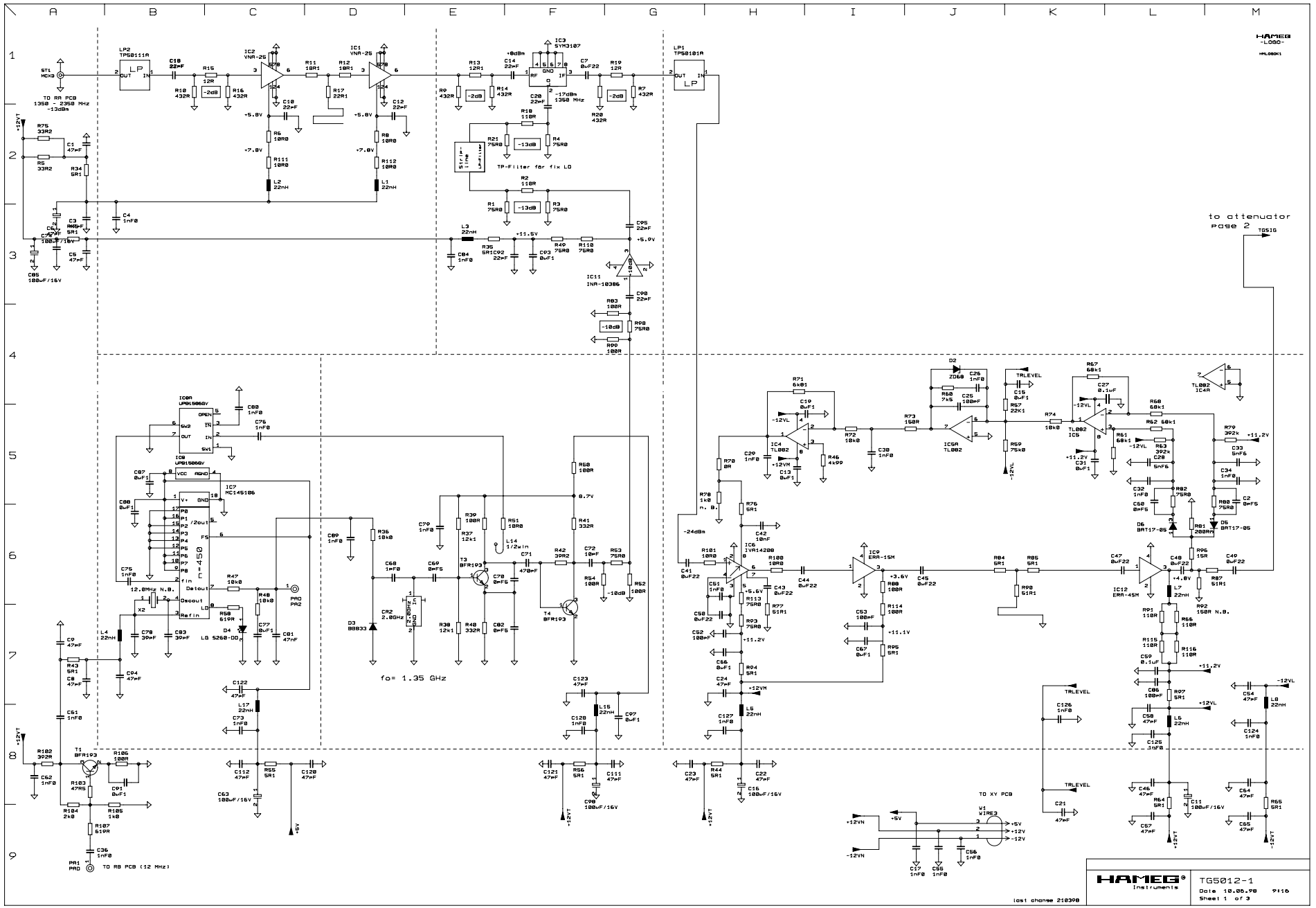

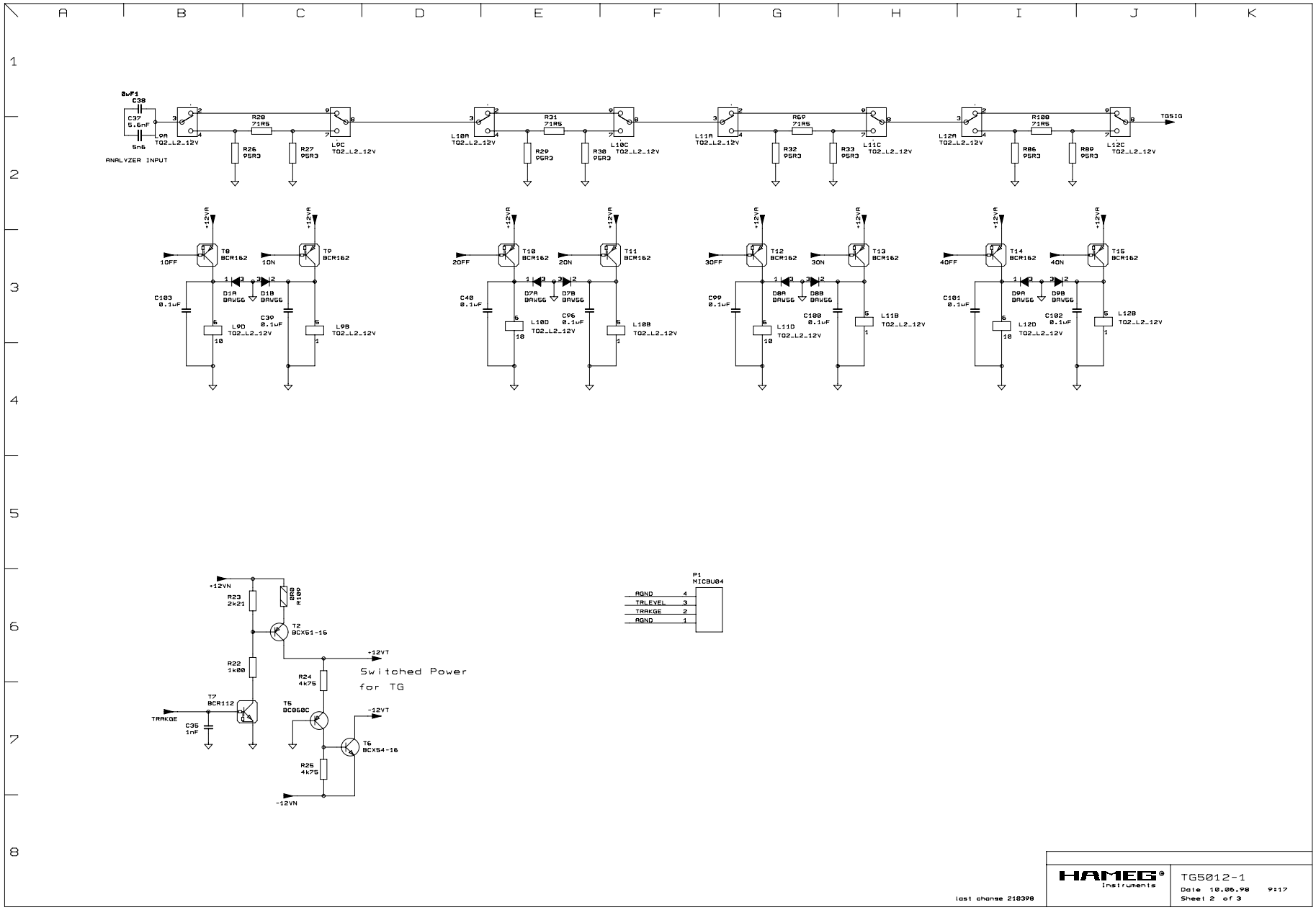
ANALYZER INPUT
TG5IG
Switched Power
for TG
TRAKGE
P1
MICBU04
AGND
TRLEVEL
TRAKGE
AGND
HAMEG Instruments
TG5012-1
Date 10.06.98 9:17
Sheet 2 of 3
last change 210398

TG Board - Top and bottom side

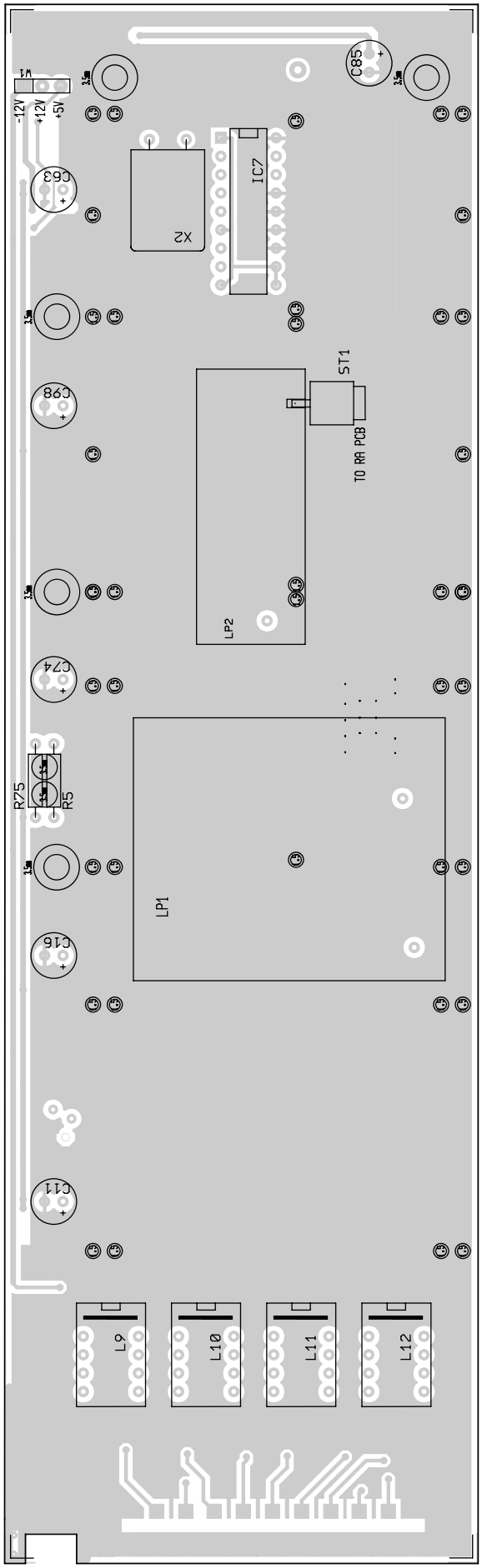

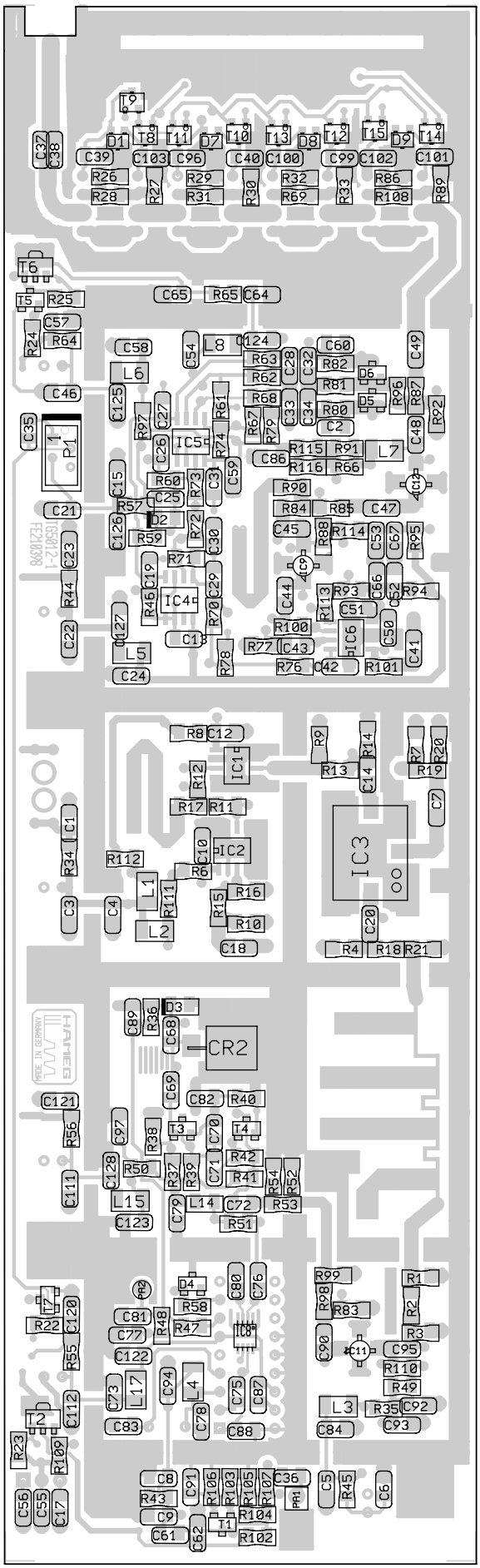

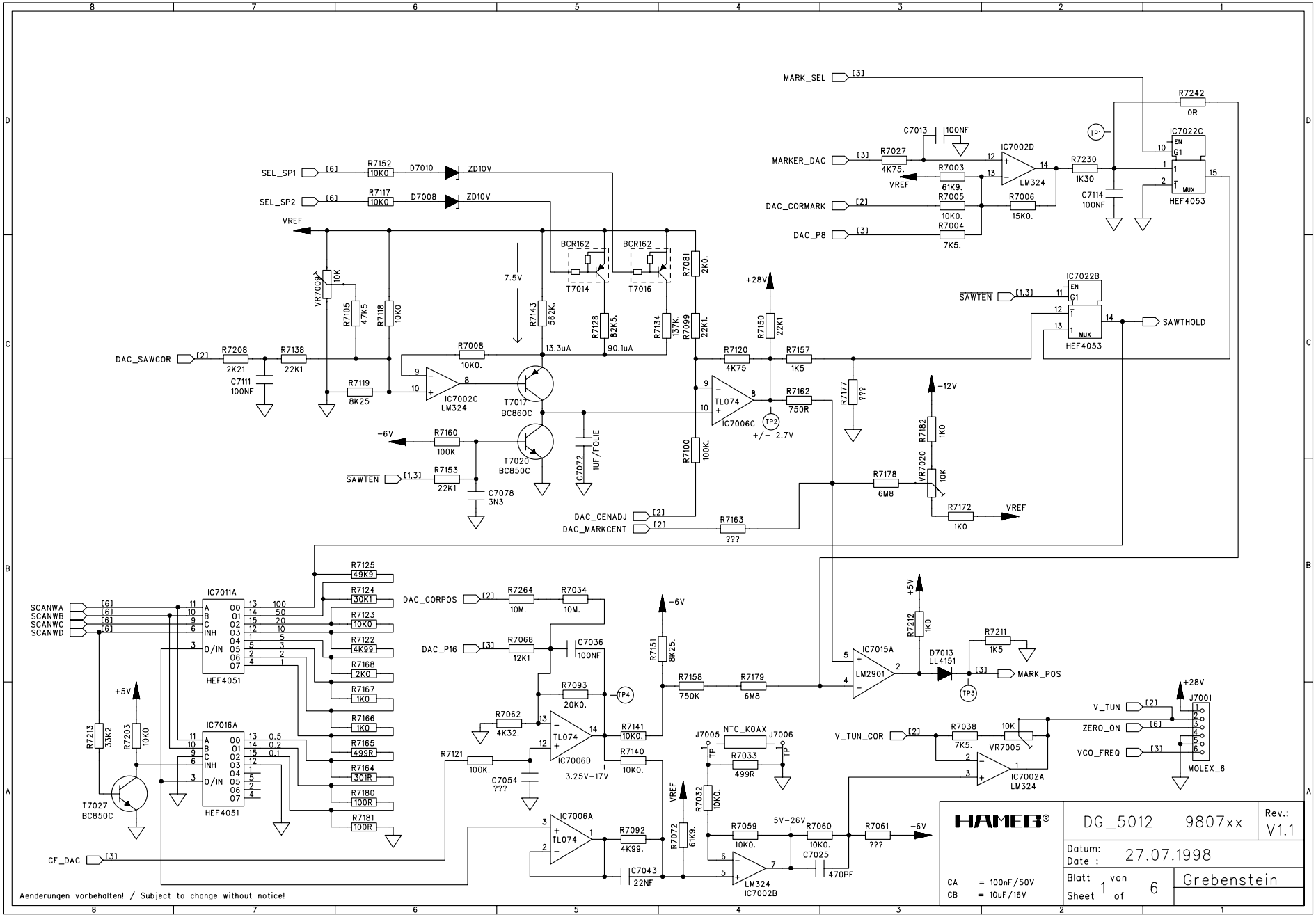
MARK_SEL
SEL_SP1
SEL_SP2
VREF
MARKER_DAC
DAC_CORMARK
DAC_P8
DAC_SAWCOR
SAWTEN
SAWTHOLD
DAC_CENADJ
DAC_MARKCENT
DAC_CORPOS
DAC_P16
MARK_POS
V_TUN
ZERO_ON
VCO_FREQ
V_TUN_COR
CF_DAC
SCANWA
SCANWB
SCANWC
SCANWD
IC7002C LM324
IC7002D LM324
IC7022C HEF4053
IC7022B HEF4053
IC7011A HEF4051
IC7016A HEF4051
IC7006C TL074
IC7006D TL074
IC7006A TL074
IC7015A LM2901
IC7002A LM324
IC7002B LM324
T7014 BCR162
T7016 BCR162
T7017 BC860C
T7020 BC850C
T7027 BC850C
D7010 ZD10V
D7008 ZD10V
D7013 LL4151
J7005 NTC_KOAX
J7006
J7001 MOLEX_6
7.5V
13.3uA
90.1uA
3.25V-17V
5V-26V
+/- 2.7V
+28V
-12V
-6V
+5V
VREF
Aenderungen vorbehalten! / Subject to change without notice!
HAMEG®
DG_5012 9807xx
Rev.: V1.1
Datum: Date : 27.07.1998
Blatt Sheet 1 von of 6
Grebenstein
CA = 100nF/50V
CB = 10uF/16V

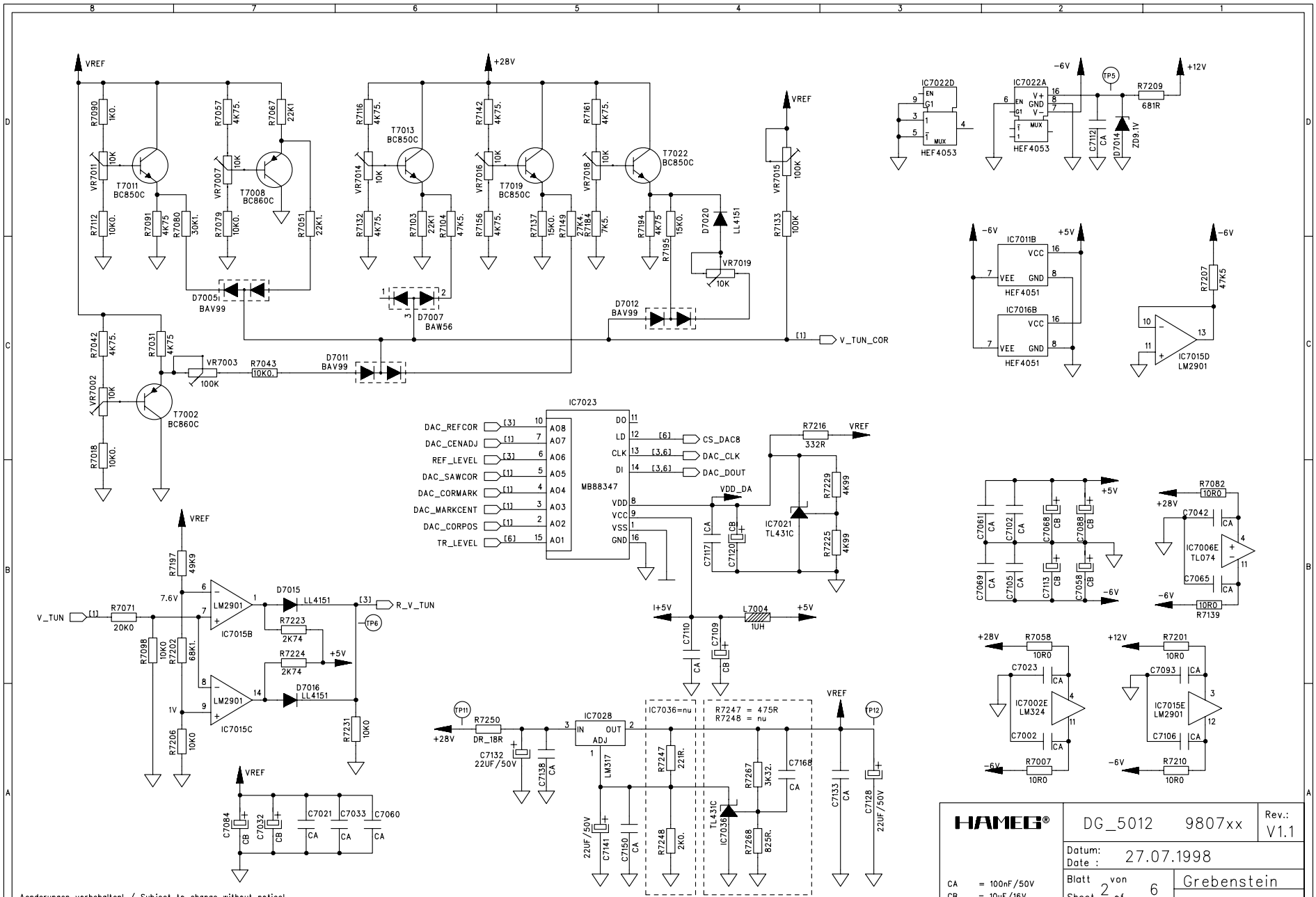
VREF
+28V
T7011 BC850C
T7008 BC860C
T7013 BC850C
T7019 BC850C
T7022 BC850C
T7002 BC860C
D7005 BAV99
D7007 BAW56
D7011 BAV99
D7012 BAV99
VR7019
V_TUN_COR
IC7023
MB88347
DAC_REFCOR
DAC_CENADJ
REF_LEVEL
DAC_SAWCOR
DAC_CORMARK
DAC_MARKCENT
DAC_CORPOS
TR_LEVEL
CS_DAC8
DAC_CLK
DAC_DOUT
VDD_DA
IC7021 TL431C
IC7022D HEF4053
IC7022A HEF4053
-6V
+12V
ZD9.1V
IC7011B HEF4051
IC7016B HEF4051
+5V
IC7015D LM2901
IC7006E TL074
IC7002E LM324
IC7015E LM2901
V_TUN
R_V_TUN
IC7015B LM2901
IC7015C LM2901
7.6V
1V
L7004 1UH
I+5V
IC7028 LM317
IC7036=nu
R7247 = 475R
R7248 = nu
IC7038 TL431C
Aenderungen vorbehalten! / Subject to change without notice!
HAMEG®
DG_5012 9807xx
Rev.: V1.1
Datum: Date : 27.07.1998
Blatt Sheet 2 von of 6
Grebenstein
CA = 100nF/50V
CB = 10uF/16V

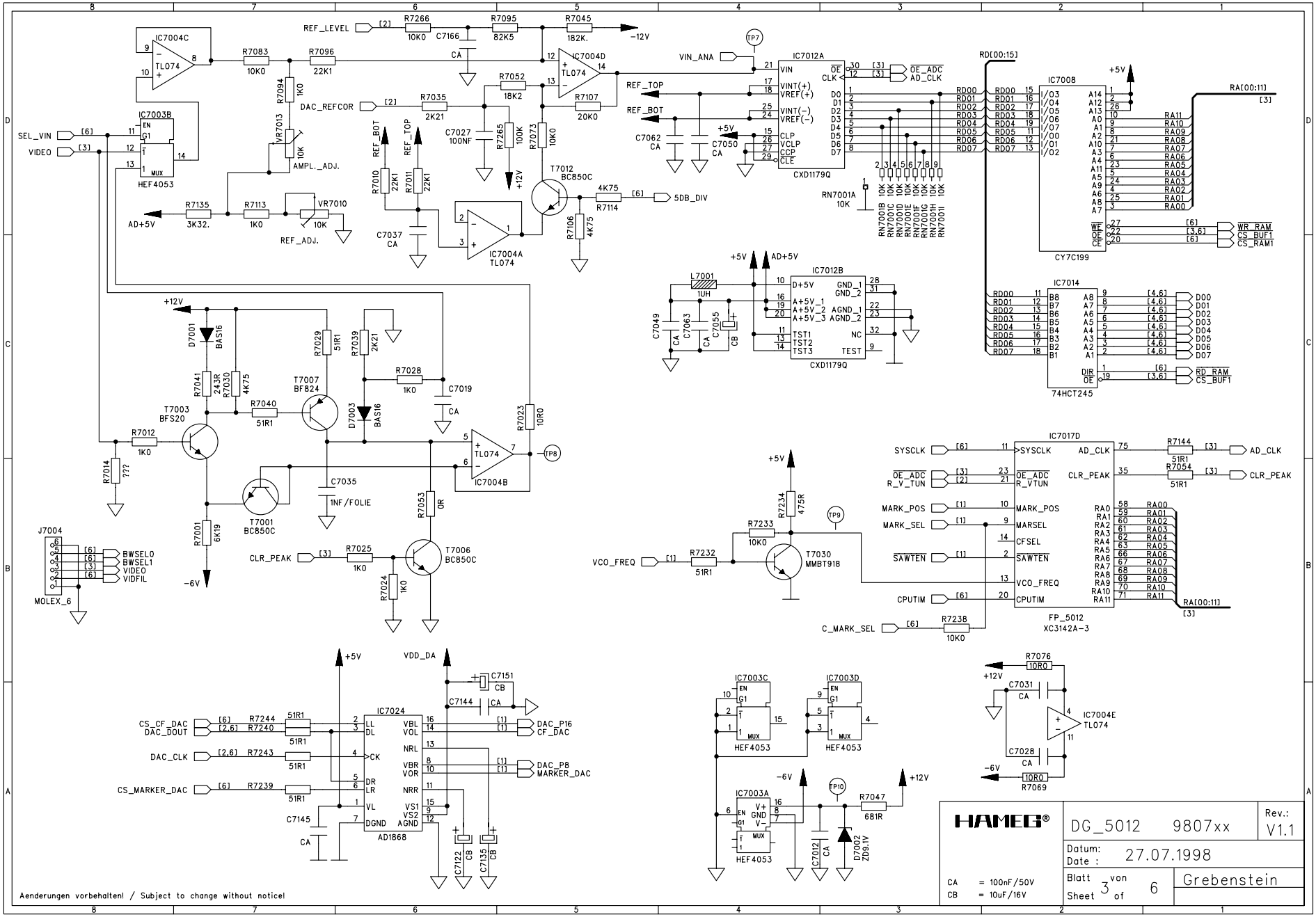
IC7004C
TL074
R7083
10K0
R7096
22K1
REF_LEVEL
R7266
10K0
C7166
R7095
82K5
R7045
182K.
-12V
IC7004D
TL074
R7052
18K2
R7107
20K0
DAC_REFCOR
R7035
2K21
C7027
100NF
R7265
100K
R7073
10K0
+12V
REF_BOT
REF_TOP
R7010
22K1
R7011
22K1
T7012
BC850C
4K75
R7114
5DB_DIV
R7106
4K75
IC7004A
TL074
C7037
CA
IC7003B
HEF4053
SEL_VIN
VIDEO
R7094
1K0
VR7013
10K
AMPL._ADJ.
R7135
3K32.
R7113
1K0
VR7010
10K
REF_ADJ.
AD+5V
VIN_ANA
IC7012A
CXD1179Q
REF_TOP
REF_BOT
C7062
CA
C7050
CA
+5V
RN7001A
10K
RD[00:15]
IC7008
CY7C199
RA[00:11]
WR_RAM
CS_BUF1
CS_RAM1
IC7014
74HCT245
RD_RAM
CS_BUFT
L7001
1UH
IC7012B
CXD1179Q
C7049
C7063
C7055
D7001
BAS16
R7029
51R1
R7039
2K21
R7028
1K0
C7019
R7041
243R
R7030
4K75
T7007
BF824
T7003
BFS20
R7040
51R1
D7003
BAS16
R7023
10R0
R7012
1K0
R7014
???
C7035
1NF/FOLIE
T7001
BC850C
R7001
6K19
-6V
IC7004B
TL074
TP8
R7053
0R
CLR_PEAK
R7025
1K0
T7006
BC850C
R7024
1K0
J7004
MOLEX_6
BWSEL0
BWSEL1
VIDEO
VIDFIL
IC7017D
FP_5012
XC3142A-3
SYSCLK
OE_ADC
R_V_TUN
MARK_POS
MARSEL
CFSEL
SAWTEN
VCO_FREQ
CPUTIM
AD_CLK
CLR_PEAK
R7144
51R1
R7054
51R1
RA[00:11]
R7234
475R
R7233
10K0
T7030
MMBT918
VCO_FREQ
R7232
51R1
C_MARK_SEL
R7238
10K0
IC7024
AD1868
CS_CF_DAC
DAC_DOUT
DAC_CLK
CS_MARKER_DAC
R7244
R7240
R7243
R7239
51R1
C7151
CB
C7144
CA
DAC_P16
CF_DAC
DAC_P8
MARKER_DAC
C7145
CA
C7122
CB
C7135
CB
VDD_DA
IC7003C
IC7003D
HEF4053
IC7003A
HEF4053
R7047
681R
C7012
CA
D7002
Z09.1V
TP10
R7076
10R0
C7031
CA
IC7004E
TL074
C7028
CA
R7069
10R0
Aenderungen vorbehalten! / Subject to change without notice!
HAMEG®
DG_5012 9807xx
Rev.: V1.1
Datum: Date : 27.07.1998
Blatt Sheet 3 von of 6
Grebenstein
CA = 100nF/50V
CB = 10uF/16V

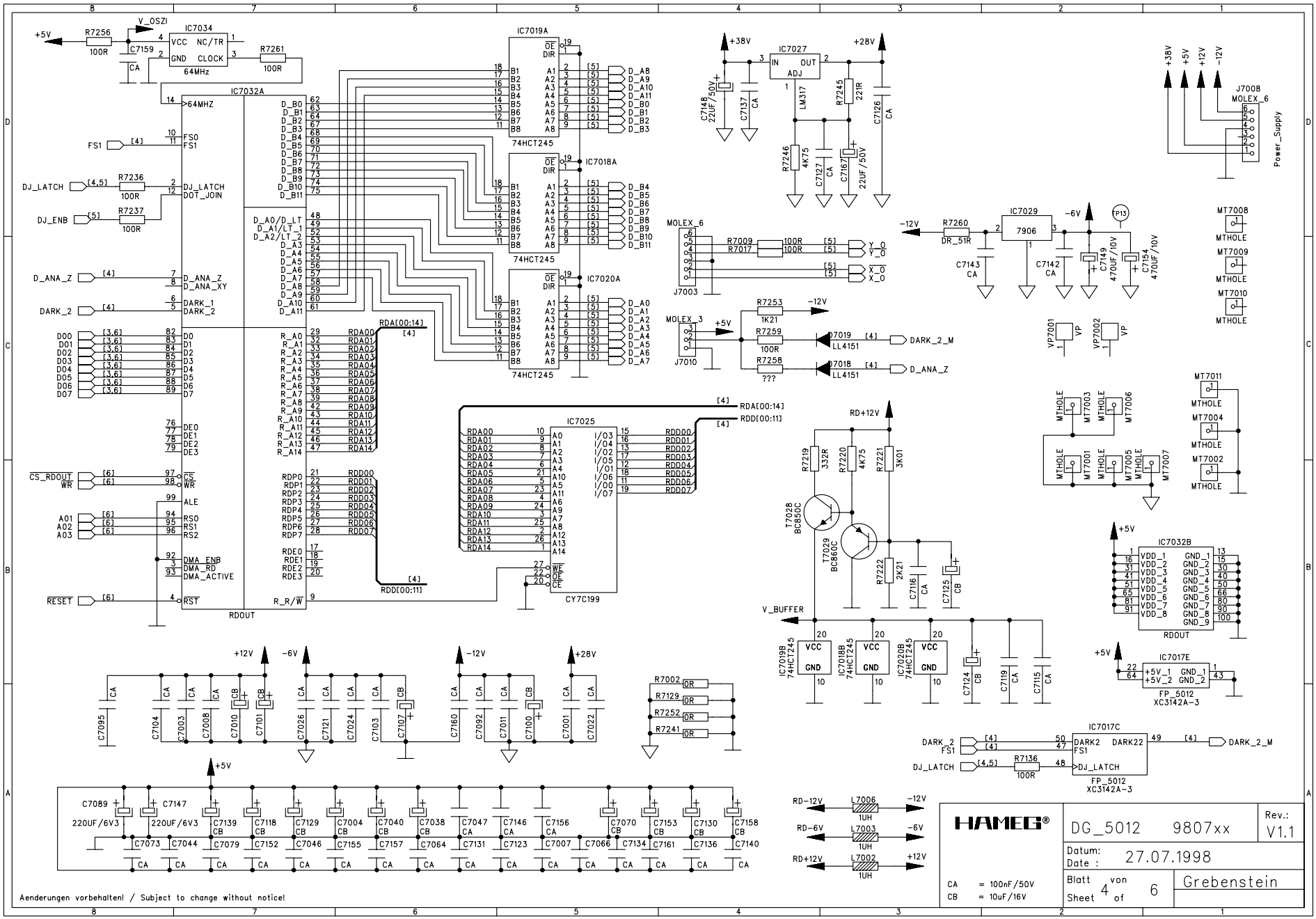
IC7034
64MHz
IC7032A
IC7019A
IC7018A
IC7020A
74HCT245
IC7025
CY7C199
IC7027
LM317
IC7029
7906
IC7032B
IC7017E
IC7017C
FP_5012
XC3142A-3
J7008
MOLEX_6
Power_Supply
J7003
J7010
RDOUT
HAMEG®
DG_5012 9807xx
Rev.: V1.1
Datum: Date : 27.07.1998
Blatt Sheet 4 von of 6
Grebenstein
CA = 100nF/50V
CB = 10uF/16V
Aenderungen vorbehalten! / Subject to change without notice!

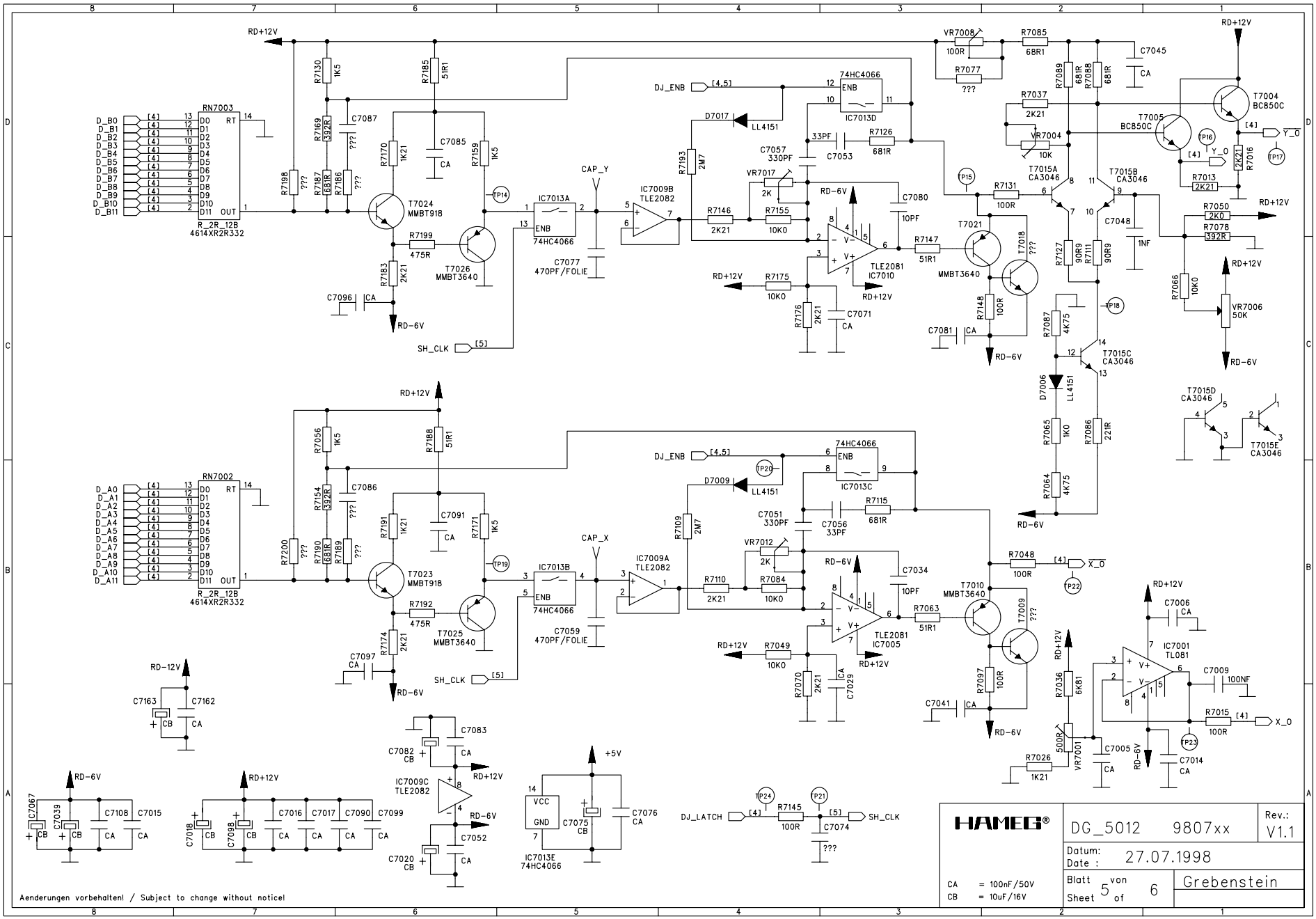
HAMEG®
DG_5012 9807xx
Rev.: V1.1
Datum: Date : 27.07.1998
Blatt Sheet 5 von of 6
Grebenstein
CA = 100nF/50V
CB = 10uF/16V
Aenderungen vorbehalten! / Subject to change without notice!
RN7003
R_2R_12B
4614XR2R332
RN7002
R_2R_12B
4614XR2R332
IC7013A
74HC4066
IC7013B
74HC4066
IC7013C
74HC4066
IC7013D
74HC4066
IC7013E
74HC4066
IC7009A
TLE2082
IC7009B
TLE2082
IC7009C
TLE2082
IC7010
TLE2081
IC7005
TLE2081
IC7001
TL081
T7024
MMBT918
T7026
MMBT3640
T7023
MMBT918
T7025
MMBT3640
T7021
MMBT3640
T7018
T7010
MMBT3640
T7009
T7015A
CA3046
T7015B
CA3046
T7015C
CA3046
T7015D
CA3046
T7015E
CA3046
T7004
BC850C
T7005
BC850C
VR7006
50K
VR7001
500R
VR7004
10K
VR7008
100R
VR7017
2K
VR7012
2K
CAP_Y
CAP_X
CAP_Y
CAP_X
DJ_ENB
DJ_LATCH
SH_CLK
RD+12V
RD-6V
+5V
X_O
Y_O

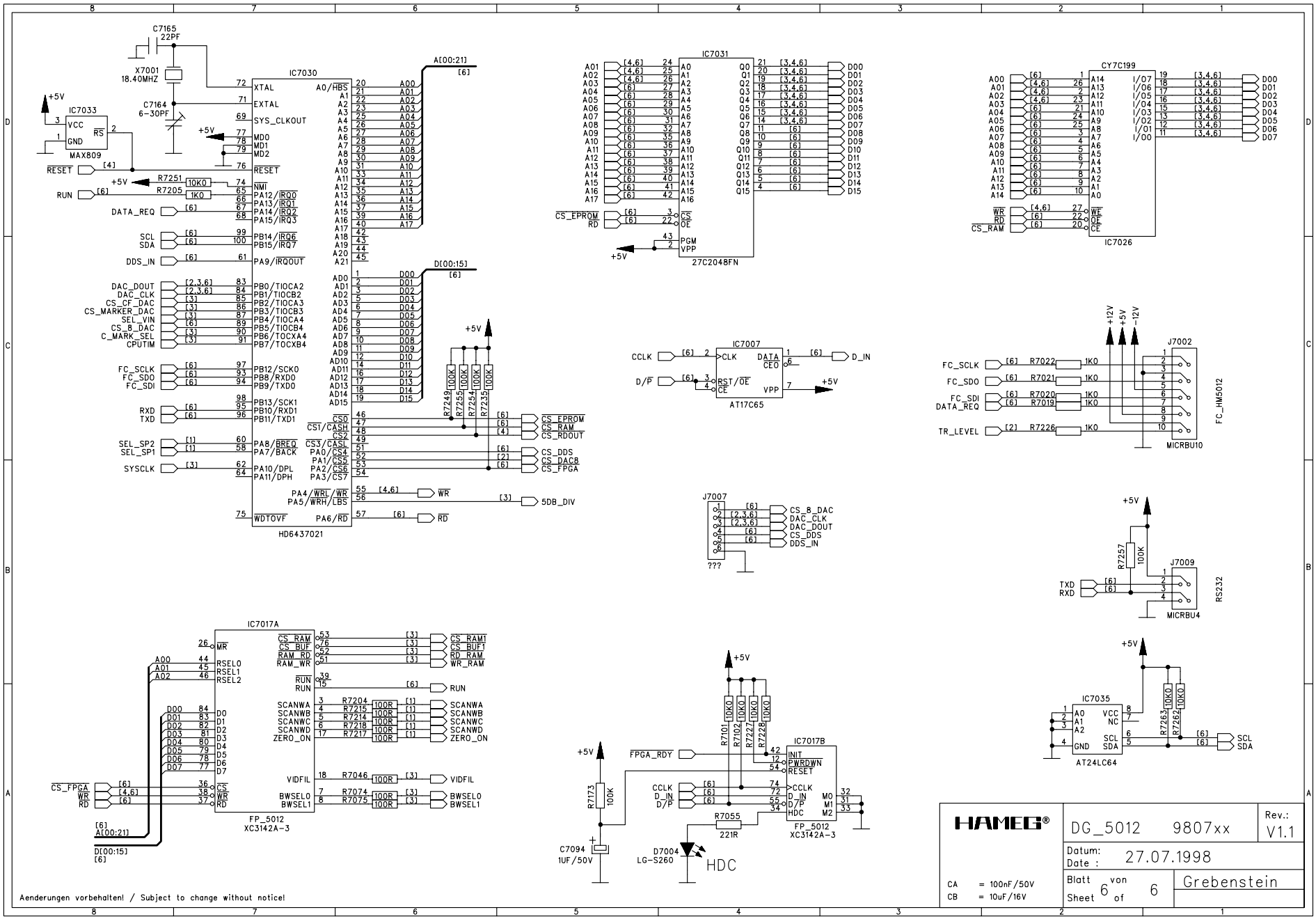
IC7030
HD6437021
IC7031
27C2048FN
CY7C199
IC7026
IC7033
MAX809
X7001
18.40MHZ
C7165
22PF
C7164
6-30PF
IC7007
AT17C65
J7002
MICRBU10
FC_HM5012
J7007
???
J7009
MICRBU4
RS232
IC7017A
FP_5012
XC3142A-3
IC7017B
IC7035
AT24LC64
D7004
LG-S260
HDC
C7094
1UF/50V
Aenderungen vorbehalten! / Subject to change without notice!
CA = 100nF/50V
CB = 10uF/16V
HAMEG®
DG_5012 9807xx
Rev.: V1.1
Datum: Date : 27.07.1998
Blatt Sheet 6 von of 6
Grebenstein

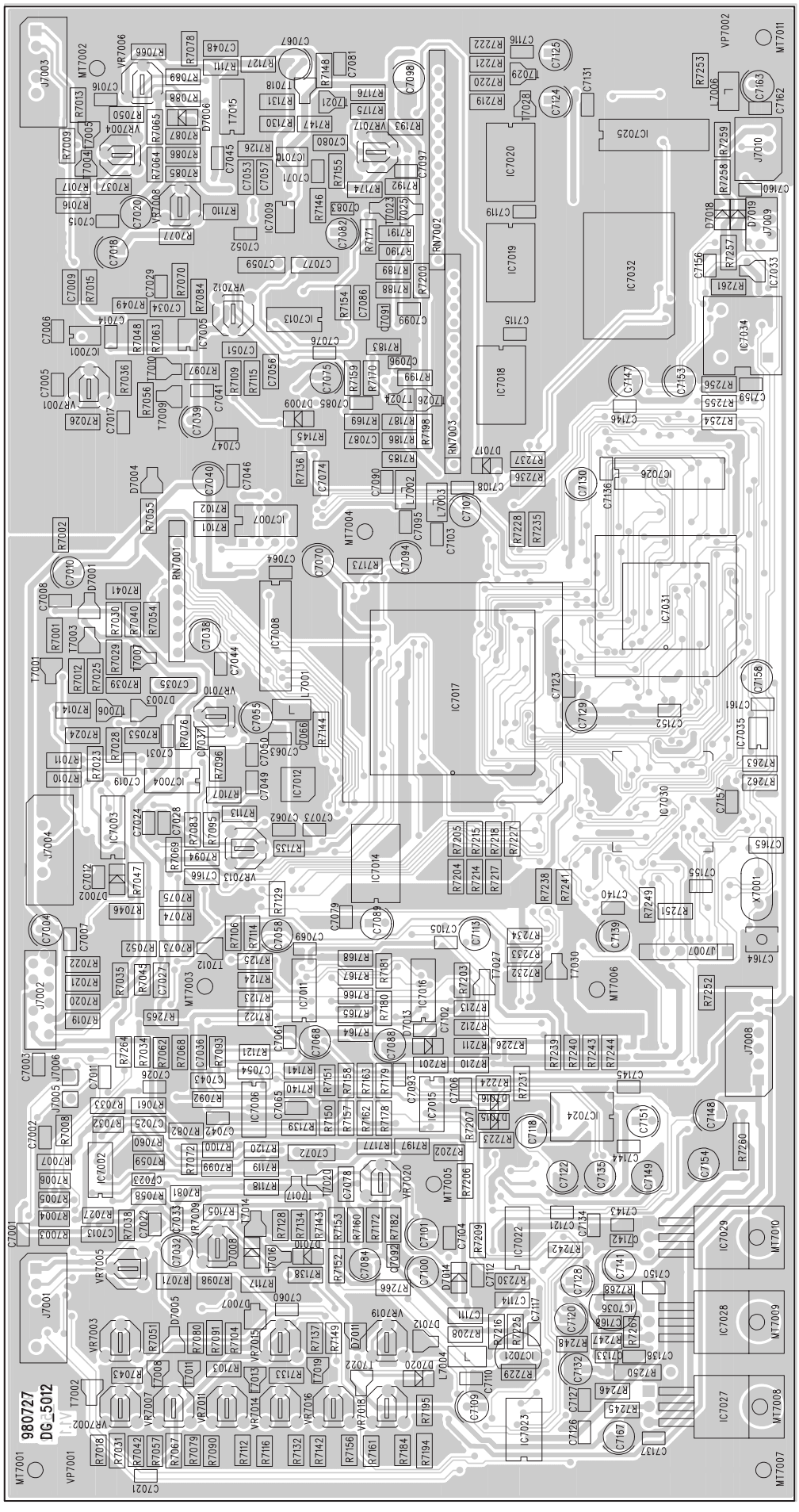
980727
DG_5012

Digital Board - Bottom side

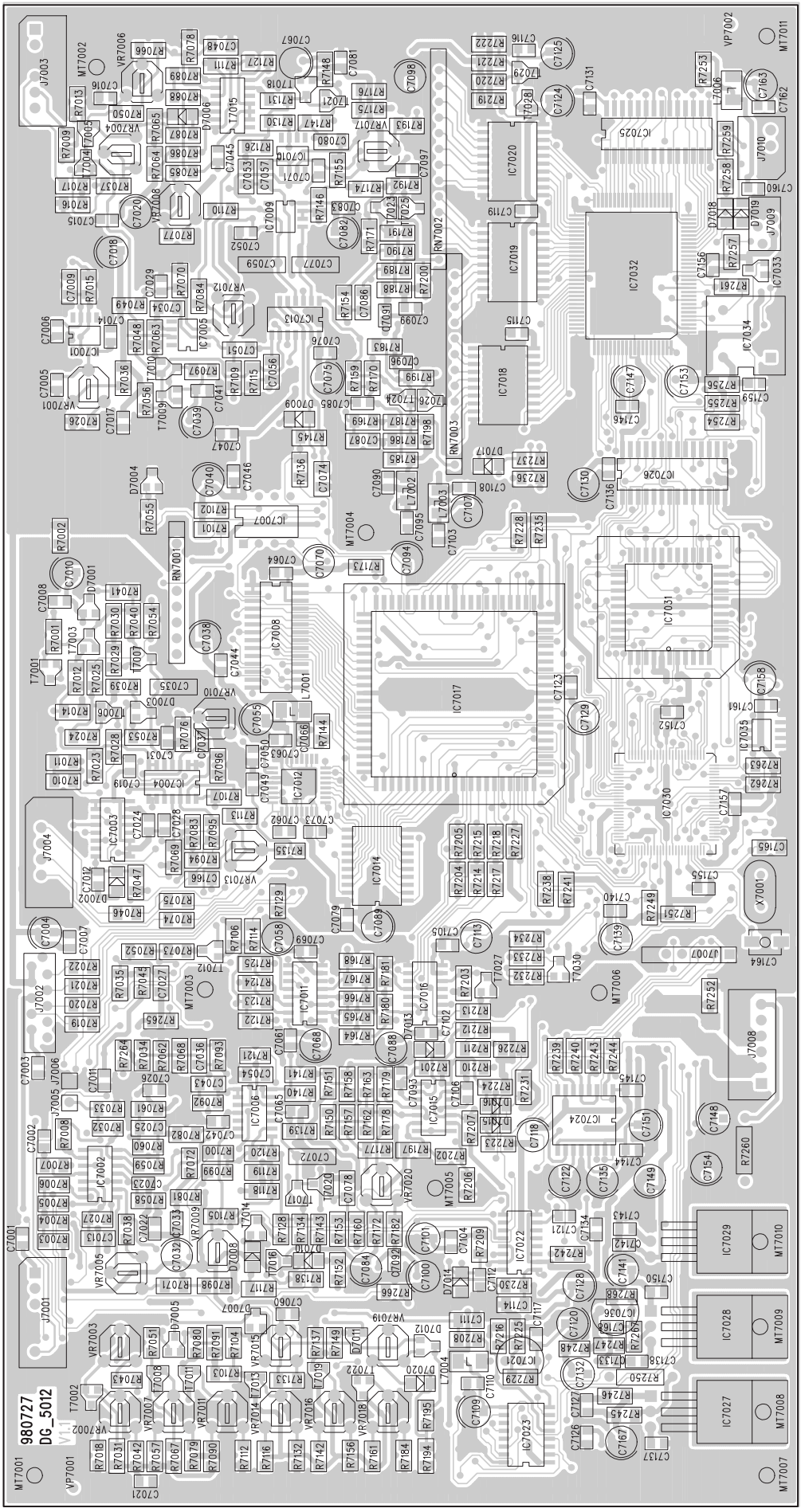

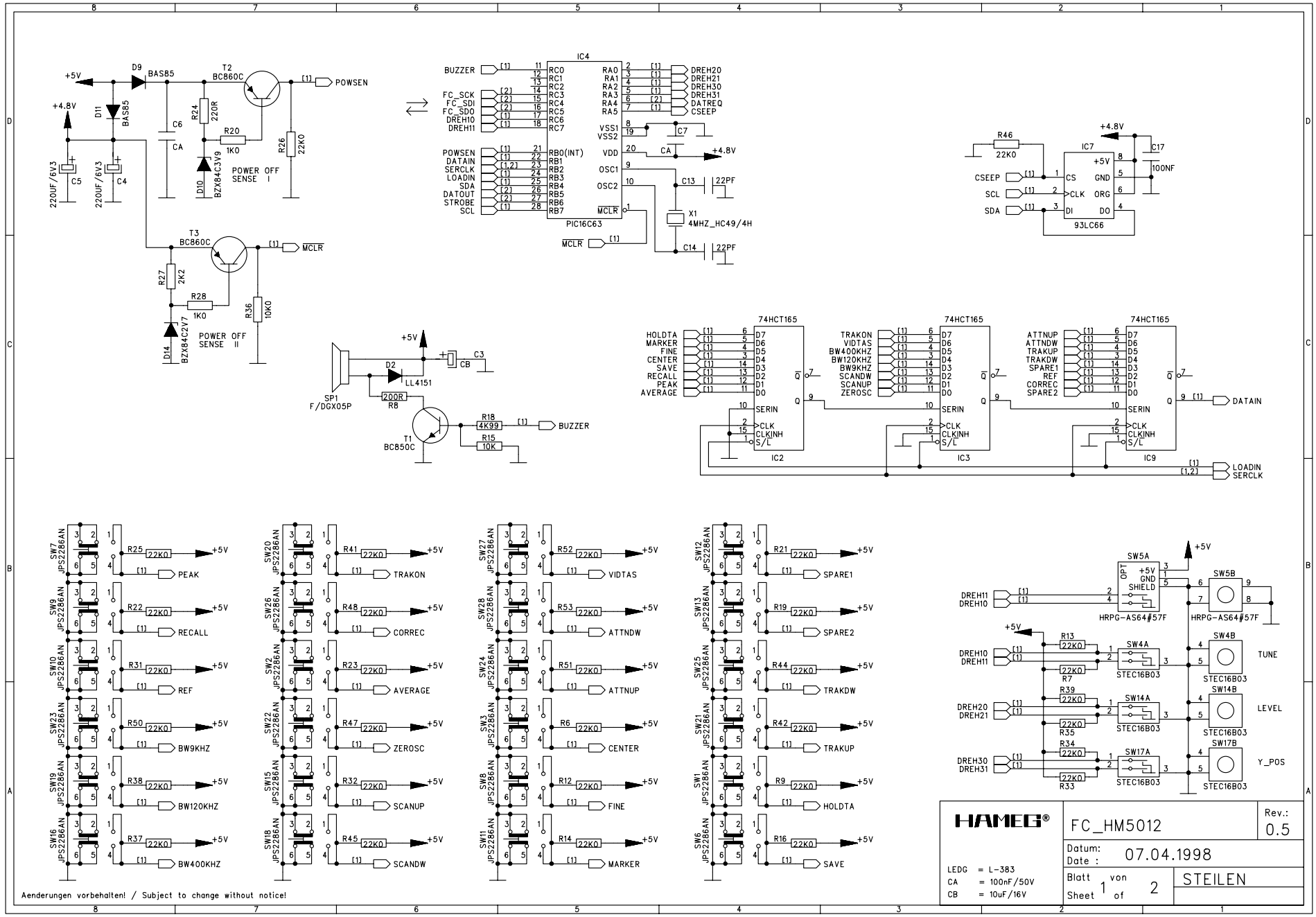
+5V
D9 BAS85
T2 BC860C
[1] POWSEN
+4.8V
D11 BAS85
R24 220R
R20 1K0
R26 22K0
C6
CA
C5 220UF/6V3
C4 220UF/6V3
D10 BZX84C3V9
POWER OFF SENSE I
T3 BC860C
[1] MCLR
R27 2K2
R28 1K0
R36 10K0
D14 BZX84C2V7
POWER OFF SENSE II
IC4
BUZZER
FC_SCK
FC_SDI
FC_SDO
DREH10
DREH11
POWSEN
DATAIN
SERCLK
LOADIN
SDA
DATOUT
STROBE
SCL
RC0 RC1 RC2 RC3 RC4 RC5 RC6 RC7
RB0(INT) RB1 RB2 RB3 RB4 RB5 RB6 RB7
RA0 RA1 RA2 RA3 RA4 RA5
VSS1 VSS2
VDD
OSC1
OSC2
MCLR
PIC16C63
DREH20 DREH21 DREH30 DREH31 DATREQ CSEEP
C7
CA
+4.8V
C13 22PF
C14 22PF
X1 4MHZ_HC49/4H
R46 22K0
IC7
CSEEP
SCL
SDA
CS CLK DI
+5V GND ORG DO
93LC66
C17 100NF
SP1 F/DGX05P
D2 LL4151
C3 CB
R8 200R
T1 BC850C
R18 4K99
R15 10K
[1] BUZZER
74HCT165
IC2
HOLDTA MARKER FINE CENTER SAVE RECALL PEAK AVERAGE
IC3
TRAKON VIDTAS BW400KHZ BW120KHZ BW9KHZ SCANDW SCANUP ZEROSC
IC9
ATTNUP ATTNDW TRAKUP TRAKDW SPARE1 REF CORREC SPARE2
D0 D1 D2 D3 D4 D5 D6 D7
SERIN
CLK CLKINH S/L
Q
[1] DATAIN
[1] LOADIN
[1,2] SERCLK
SW7 JPS2286AN
R25 22K0 +5V [1] PEAK
SW9 JPS2286AN
R22 22K0 +5V [1] RECALL
SW10 JPS2286AN
R31 22K0 +5V [1] REF
SW23 JPS2286AN
R50 22K0 +5V [1] BW9KHZ
SW19 JPS2286AN
R38 22K0 +5V [1] BW120KHZ
SW16 JPS2286AN
R37 22K0 +5V [1] BW400KHZ
SW20 JPS2286AN
R41 22K0 +5V [1] TRAKON
SW26 JPS2286AN
R48 22K0 +5V [1] CORREC
SW2 JPS2286AN
R23 22K0 +5V [1] AVERAGE
SW22 JPS2286AN
R47 22K0 +5V [1] ZEROSC
SW15 JPS2286AN
R32 22K0 +5V [1] SCANUP
SW18 JPS2286AN
R45 22K0 +5V [1] SCANDW
SW27 JPS2286AN
R52 22K0 +5V [1] VIDTAS
SW28 JPS2286AN
R53 22K0 +5V [1] ATTNDW
SW24 JPS2286AN
R51 22K0 +5V [1] ATTNUP
SW3 JPS2286AN
R6 22K0 +5V [1] CENTER
SW8 JPS2286AN
R12 22K0 +5V [1] FINE
SW11 JPS2286AN
R14 22K0 +5V [1] MARKER
SW12 JPS2286AN
R21 22K0 +5V [1] SPARE1
SW13 JPS2286AN
R19 22K0 +5V [1] SPARE2
SW25 JPS2286AN
R44 22K0 +5V [1] TRAKDW
SW21 JPS2286AN
R42 22K0 +5V [1] TRAKUP
SW1 JPS2286AN
R9 22K0 +5V [1] HOLDTA
SW6 JPS2286AN
R16 22K0 +5V [1] SAVE
SW5A
OPT
+5V GND SHIELD
HRPG-AS64#57F
SW5B
HRPG-AS64#57F
DREH11 DREH10
SW4A
SW4B
TUNE
R13 22K0
R7 22K0
STEC16B03
DREH10 DREH11
SW14A
SW14B
LEVEL
R39 22K0
R35 22K0
DREH20 DREH21
SW17A
SW17B
Y_POS
R34 22K0
R33 22K0
DREH30 DREH31
Aenderungen vorbehalten! / Subject to change without notice!
HAMEG®
FC_HM5012
Rev.: 0.5
Datum: Date : 07.04.1998
Blatt Sheet 1 von of 2
STEILEN
LEDG = L-383
CA = 100nF/50V
CB = 10uF/16V

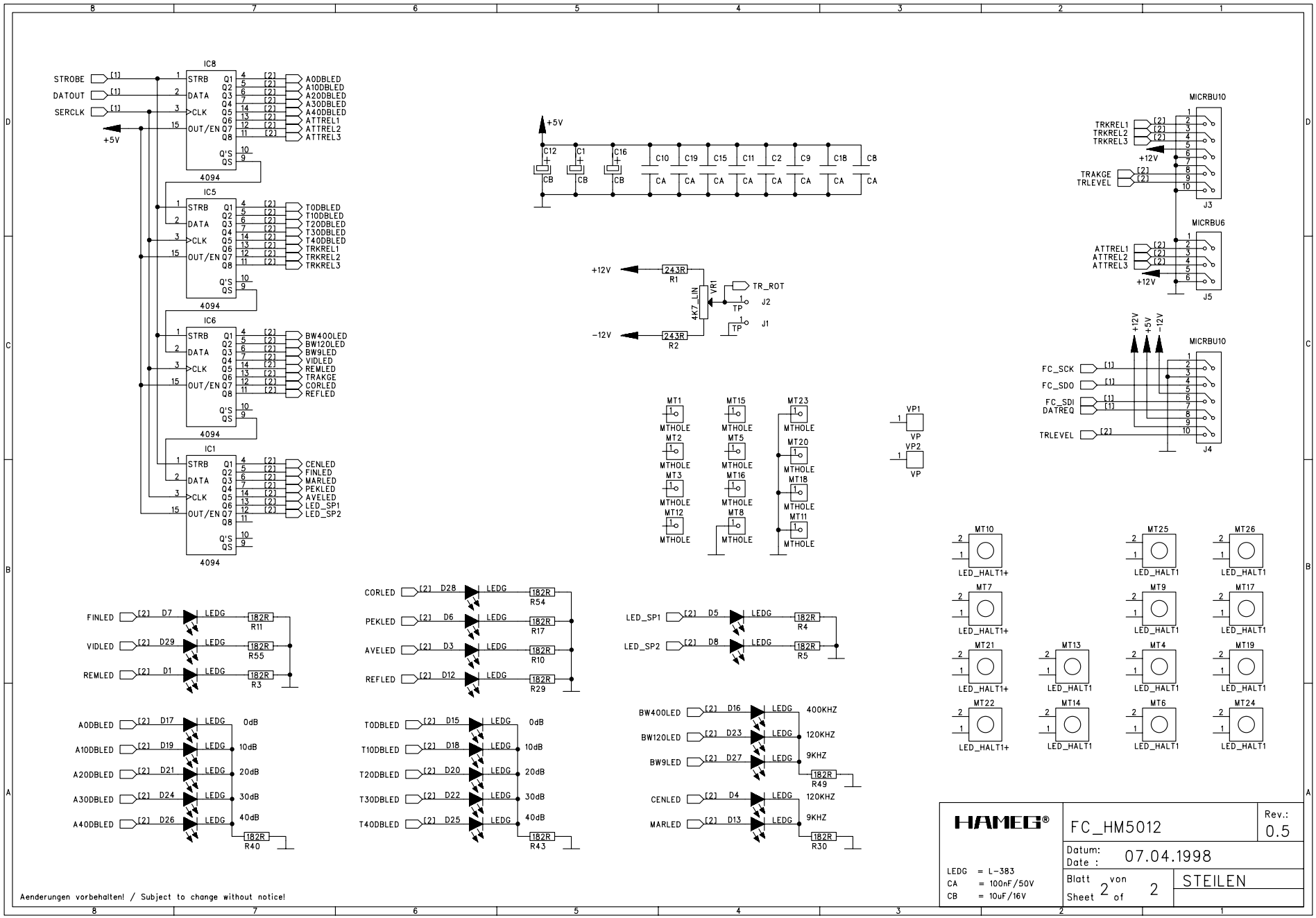
IC8
STROBE
DATOUT
SERCLK
+5V
STRB
DATA
CLK
OUT/EN
Q'S
QS
4094
A0DBLED
A10DBLED
A20DBLED
A30DBLED
A40DBLED
ATTREL1
ATTREL2
ATTREL3
IC5
T0DBLED
T10DBLED
T20DBLED
T30DBLED
T40DBLED
TRKREL1
TRKREL2
TRKREL3
IC6
BW400LED
BW120LED
BW9LED
VIDLED
REMLED
TRAKGE
CORLED
REFLED
IC1
CENLED
FINLED
MARLED
PEKLED
AVELED
LED_SP1
LED_SP2
C12
C1
C16
C10
C19
C15
C11
C2
C9
C18
C8
CB
CA
+12V
243R
R1
4K7_LIN
VR1
TR_ROT
J2
TP
J1
-12V
R2
MICRBU10
TRKREL1
TRKREL2
TRKREL3
TRAKGE
TRLEVEL
J3
MICRBU6
ATTREL1
ATTREL2
ATTREL3
J5
FC_SCK
FC_SDO
FC_SDI
DATREQ
J4
MT1
MT2
MT3
MT12
MT15
MT5
MT16
MT8
MT23
MT20
MT18
MT11
MTHOLE
VP1
VP2
VP
FINLED
VIDLED
REMLED
D7
D29
D1
LEDG
182R
R11
R55
R3
CORLED
PEKLED
AVELED
REFLED
D28
D6
D3
D12
R54
R17
R10
R29
LED_SP1
LED_SP2
D5
D8
R4
R5
A0DBLED
A10DBLED
A20DBLED
A30DBLED
A40DBLED
D17
D19
D21
D24
D26
0dB
10dB
20dB
30dB
40dB
R40
T0DBLED
T10DBLED
T20DBLED
T30DBLED
T40DBLED
D15
D18
D20
D22
D25
R43
BW400LED
BW120LED
BW9LED
CENLED
MARLED
D16
D23
D27
D4
D13
400KHZ
120KHZ
9KHZ
R49
R30
MT10
MT7
MT21
MT22
MT13
MT14
MT25
MT9
MT4
MT6
MT26
MT17
MT19
MT24
LED_HALT1+
LED_HALT1
HAMEG®
FC_HM5012
Rev.: 0.5
Datum: 07.04.1998
Date :
LEDG = L-383
CA = 100nF/50V
CB = 10uF/16V
Blatt 2 von 2
Sheet 2 of 2
STEILEN
Aenderungen vorbehalten! / Subject to change without notice!

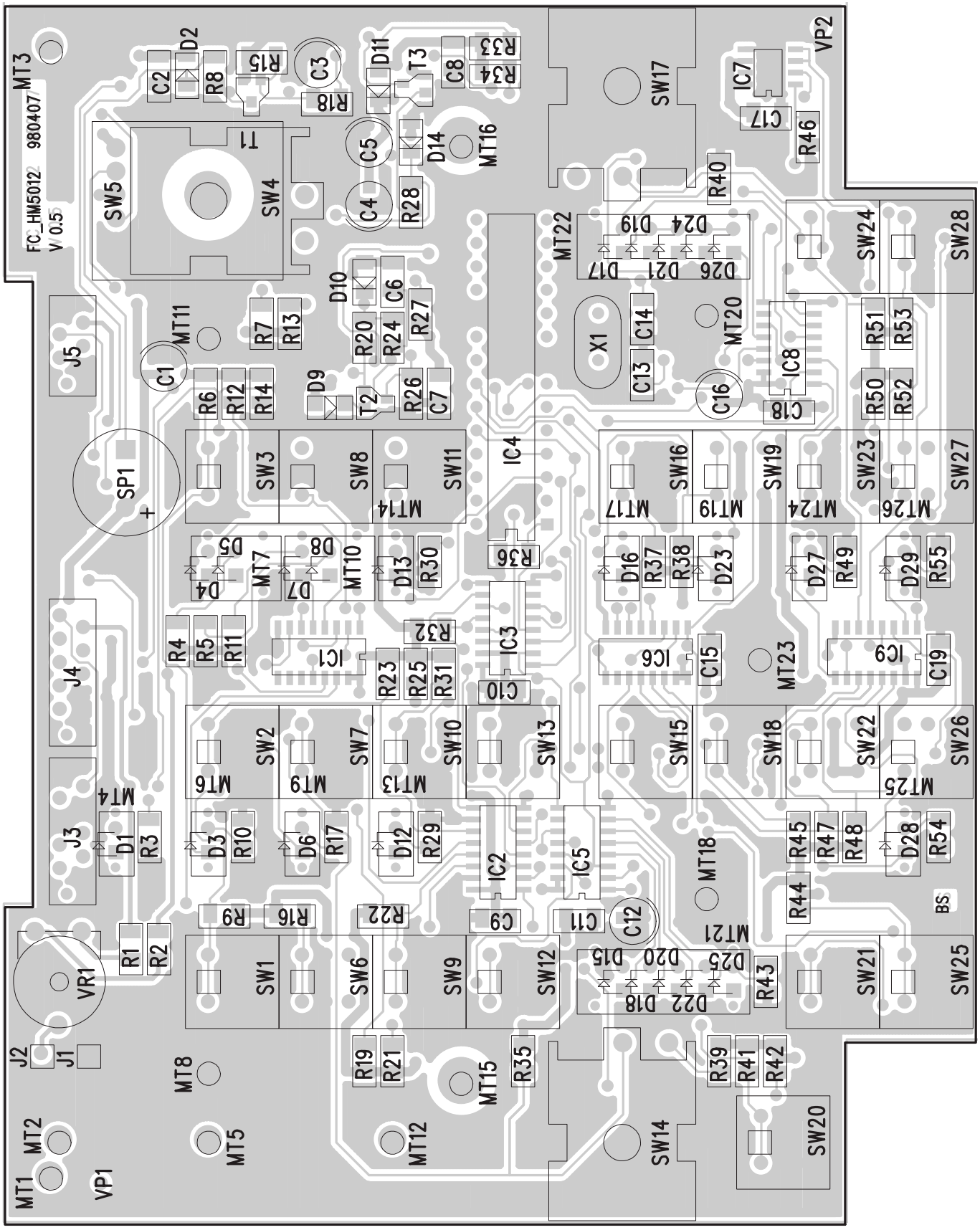
FC_HM5012 980407
V 0.5
MT3
C2
D2
R8
R15
C3
R18
T1
SW5
SW4
C5
C4
D11
T3
C8
R33
R34
D14
R28
MT16
SW17
IC7
C17
VP2
R46
R40
MT22
D24
D19
D17
D26
D21
SW24
SW28
J5
MT11
C1
R7
R13
D10
C6
R20
R24
R27
X1
C14
C13
MT20
C16
IC8
C18
R51
R53
R50
R52
R6
R12
R14
D9
T2
R26
C7
SP1
SW3
SW8
SW11
IC4
MT14
SW16
SW19
SW23
SW27
MT17
MT19
MT24
MT26
D5
D4
MT7
D8
D7
MT10
D13
R30
R36
D16
R37
R38
D23
D27
R49
D29
R55
J4
R4
R5
R11
IC1
R32
R23
R25
R31
IC3
C10
IC6
C15
MT23
IC9
C19
SW2
SW7
SW10
SW13
SW15
SW18
SW22
SW26
MT6
MT9
MT13
MT25
J3
MT4
D1
R3
D3
R10
D6
R17
D12
R29
IC2
IC5
MT18
R45
R47
R48
D28
R54
R44
BS
R9
R16
R22
C9
C11
C12
MT21
R1
R2
VR1
SW1
SW6
SW9
SW12
D25
D20
D15
D22
D18
R43
SW21
SW25
J2
J1
MT8
R19
R21
MT15
R35
R39
R41
R42
MT1
MT2
MT5
MT12
SW14
SW20
VP1

FC Board - Bottom side

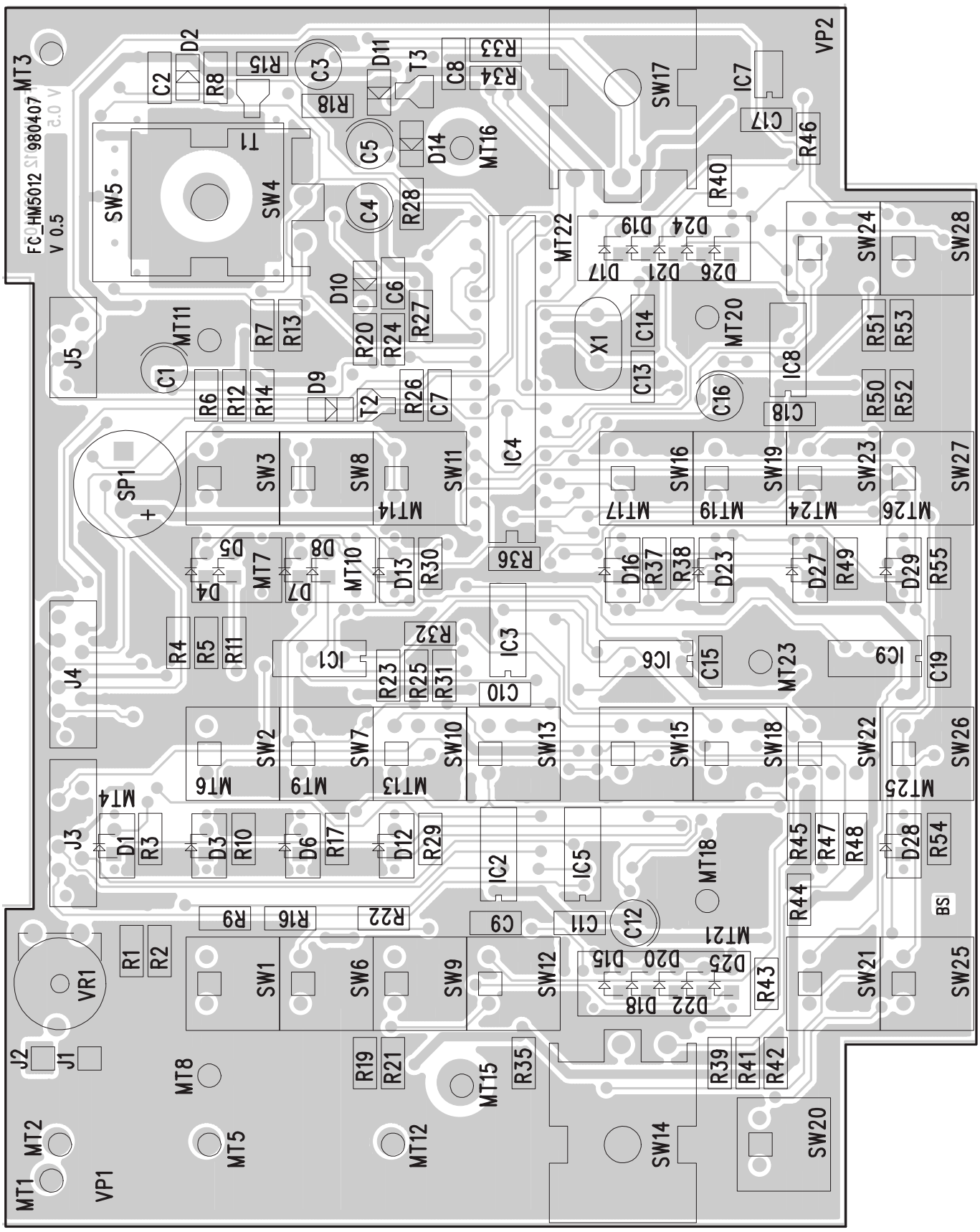

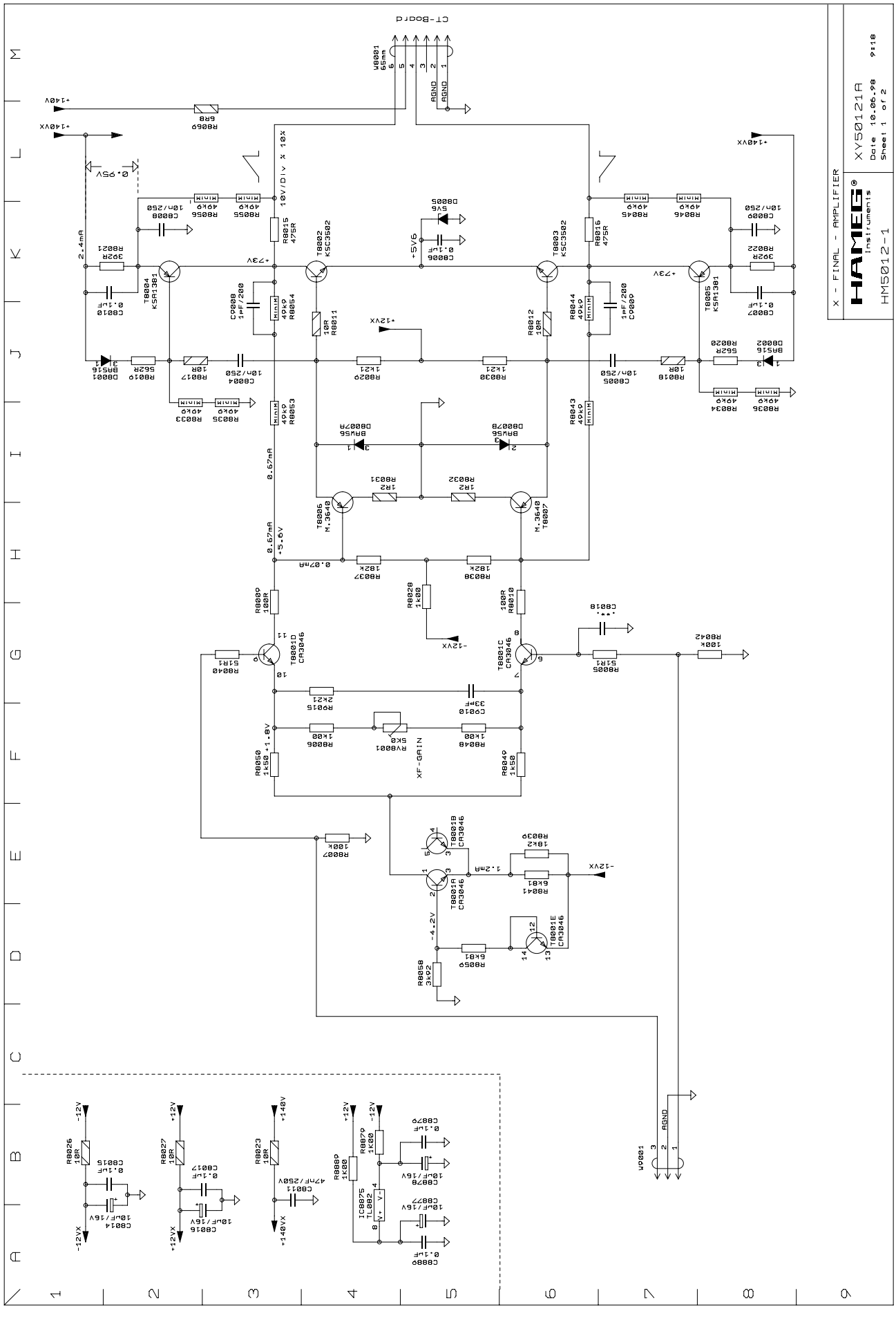
X - FINAL - AMPLIFIER
HAMEG Instruments
XY50121A
Date 10.06.98
Sheet 1 of 2
HM5012-1
CT-Board
W8001
AGND
+140V
+140VX
+73V
+12VX
-12VX
+5VG
-5.6V
-4.2V
XF-GAIN
T8001A CA3046
T8001B CA3046
T8001C CA3046
T8001D CA3046
T8001E CA3046
T8002 KSC3502
T8003 KSC3502
T8004 KSA1381
T8005 KSA1381
T8006 M.3640
T8007 M.3640
IC8875 TL082
W8001 65mm

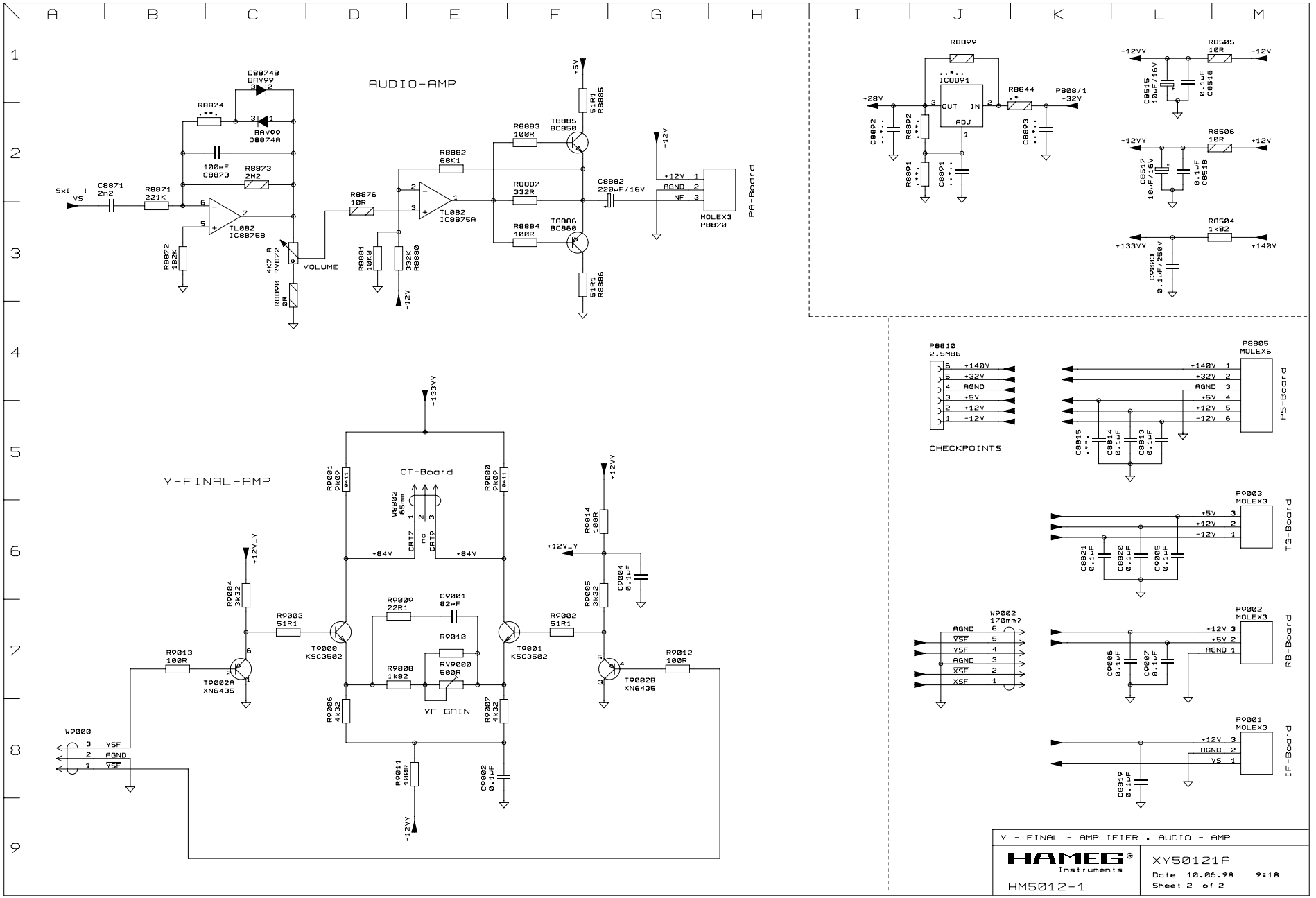
AUDIO-AMP
Y-FINAL-AMP
CT-Board
VOLUME
YF-GAIN
PA-Board
CHECKPOINTS
P8010 2.5MB6
P8805 MOLEX6
PS-Board
P9003 MOLEX3
TG-Board
P9002 MOLEX3
RB-Board
P9001 MOLEX3
IF-Board
W9002 170mm2
W9000
IC8891
TL082 IC8875B
TL082 IC8875A
T9000 KSC3502
T9001 KSC3502
T9002A XN6435
T9002B XN6435
Y - FINAL - AMPLIFIER . AUDIO - AMP
HAMEG Instruments
HM5012-1
XY50121A
Date 10.06.98 9:18
Sheet 2 of 2

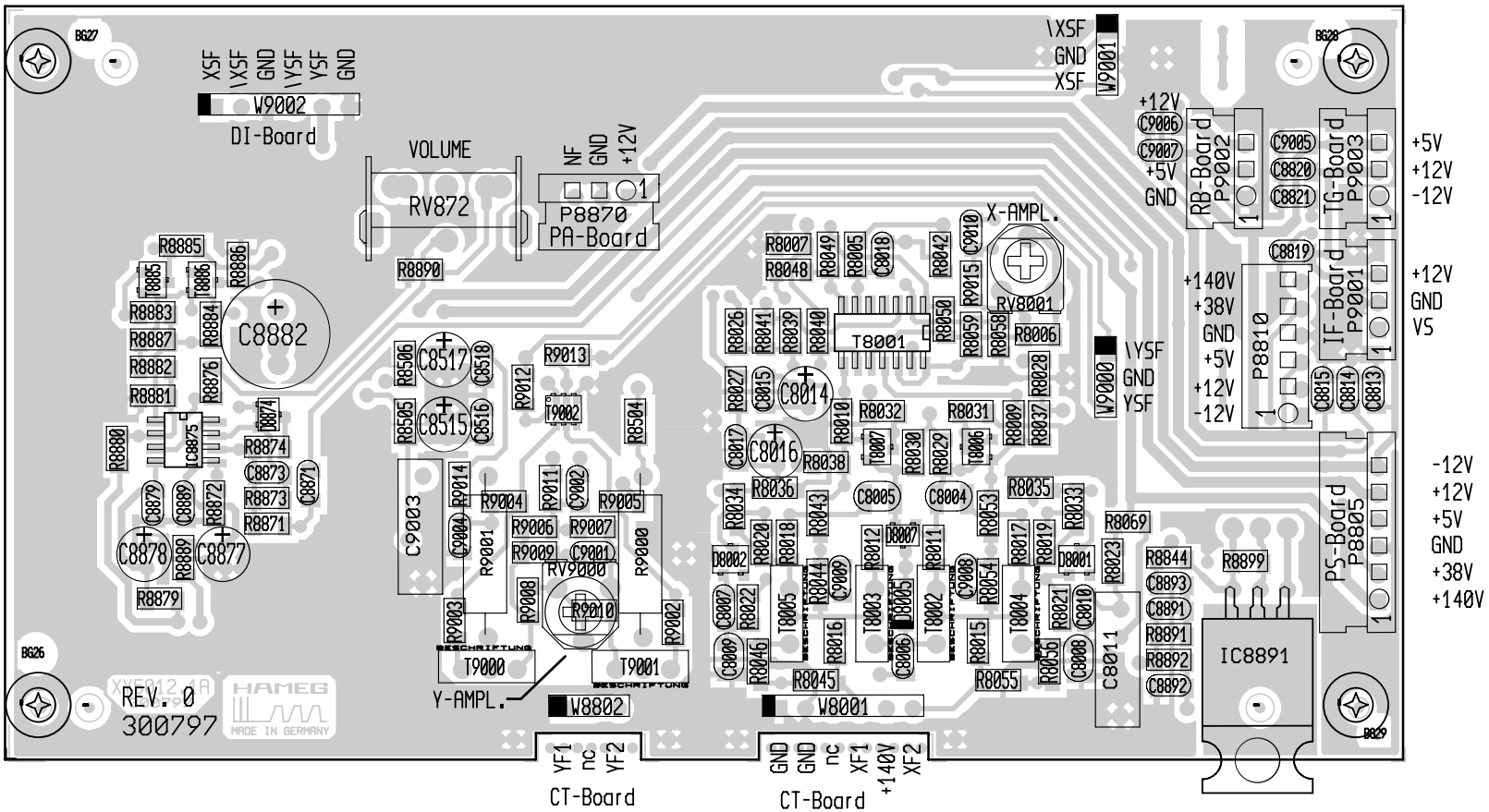
BG27
XSF
\XSF
GND
\YSF
YSF
GND
W9002
DI-Board
VOLUME
RV872
NF
GND
+12V
P8870
PA-Board
R8890
R8885
R8886
R8883
R8884
R8887
R8882
R8876
R8881
R8880
C8882
C8875
R8874
C8873
R8873
R8871
C8871
C8879
C8889
R8872
C8878
R8889
C8877
R8879
C8517
C8518
C8515
C8516
R8506
R8505
R9012
R9013
T9002
R8504
C9003
R9014
R9004
R9011
C9002
R9005
R9006
R9007
R9009
C9001
RV9000
R9000
R9001
R9003
R9008
R9010
R9002
T9000
T9001
Y-AMPL.
W8802
YF1
nc
YF2
CT-Board
BG26
REV. 0
300797
HAMEG
MADE IN GERMANY
\XSF
GND
XSF
W9001
BG28
+12V
C9006
C9007
+5V
GND
RB-Board
P9002
C9005
C8820
C8821
TG-Board
P9003
+5V
+12V
-12V
X-AMPL.
RV8001
R8007
R8048
R8049
R8005
C8018
R8042
C9010
R9015
R8026
R8041
R8039
R8040
T8001
R8050
R8059
R8058
R8006
R8028
W9000
\YSF
GND
YSF
C8014
R8027
C8015
R8010
R8032
R8031
R8009
R8037
C8016
C8017
R8038
R8036
R8034
C8005
C8004
R8035
R8033
R8069
R8020
R8018
R8043
R8012
R8011
R8053
R8017
R8019
D8001
R8023
D8002
R8044
C9009
C9008
R8054
R8844
C8893
C8891
R8891
R8892
C8892
R8899
C8007
R8022
T8005
T8003
T8002
T8004
R8021
C8010
C8011
C8009
R8046
R8016
C8006
R8015
R8056
C8008
R8045
R8055
W8001
GND
GND
nc
XF1
+140V
XF2
CT-Board
+140V
+38V
GND
+5V
+12V
-12V
P8810
C8819
IF-Board
P9001
+12V
GND
VS
C8815
C8814
C8813
PS-Board
P8805
-12V
+12V
+5V
GND
+38V
+140V
IC8891
BG29

XY Board - Bottom side

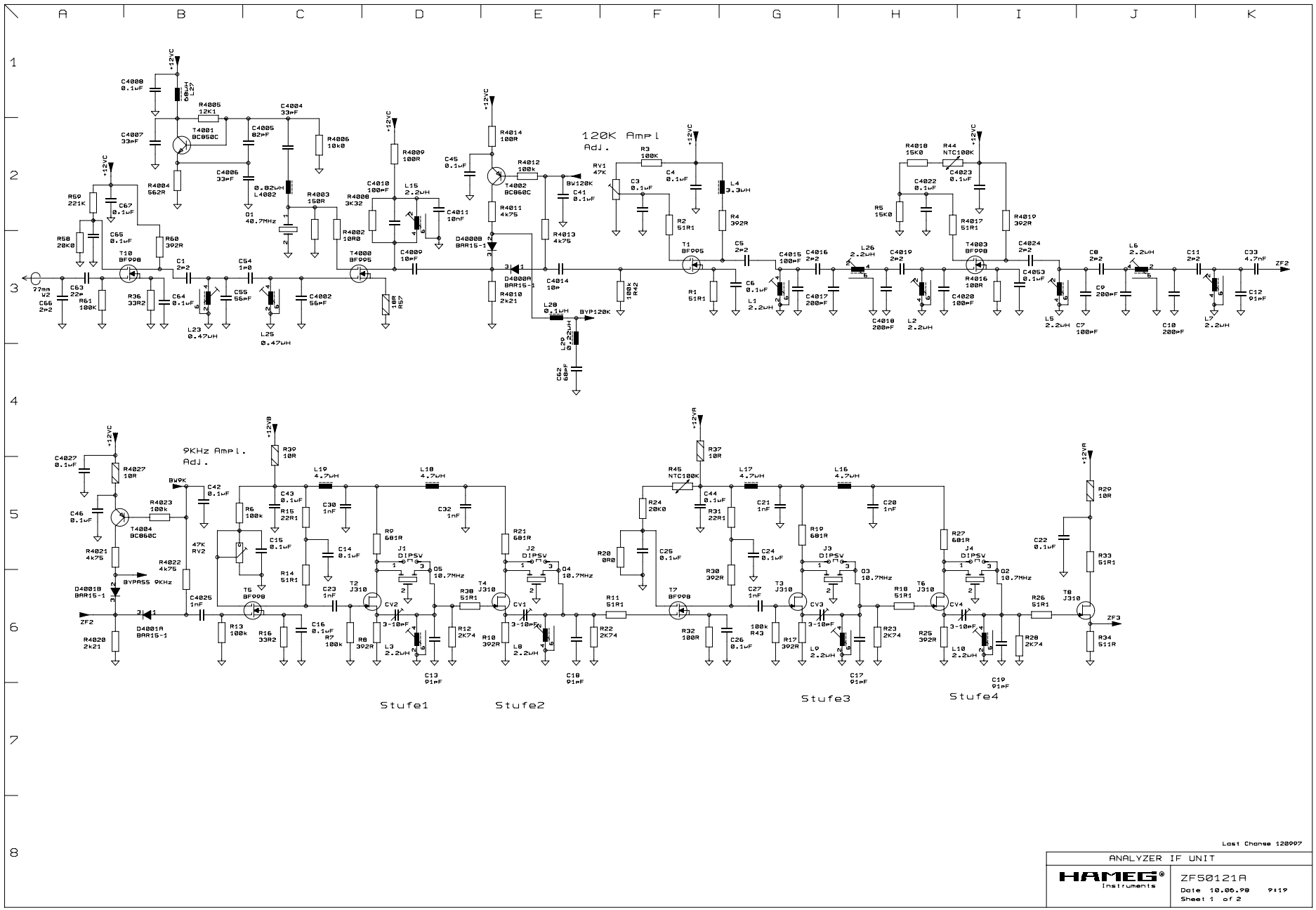
120K Ampl
Adj.
9KHz Ampl.
Adj.
Stufe1
Stufe2
Stufe3
Stufe4
Last Change 120997
ANALYZER IF UNIT
HAMEG Instruments
ZF50121A
Date 10.06.98 9:19
Sheet 1 of 2

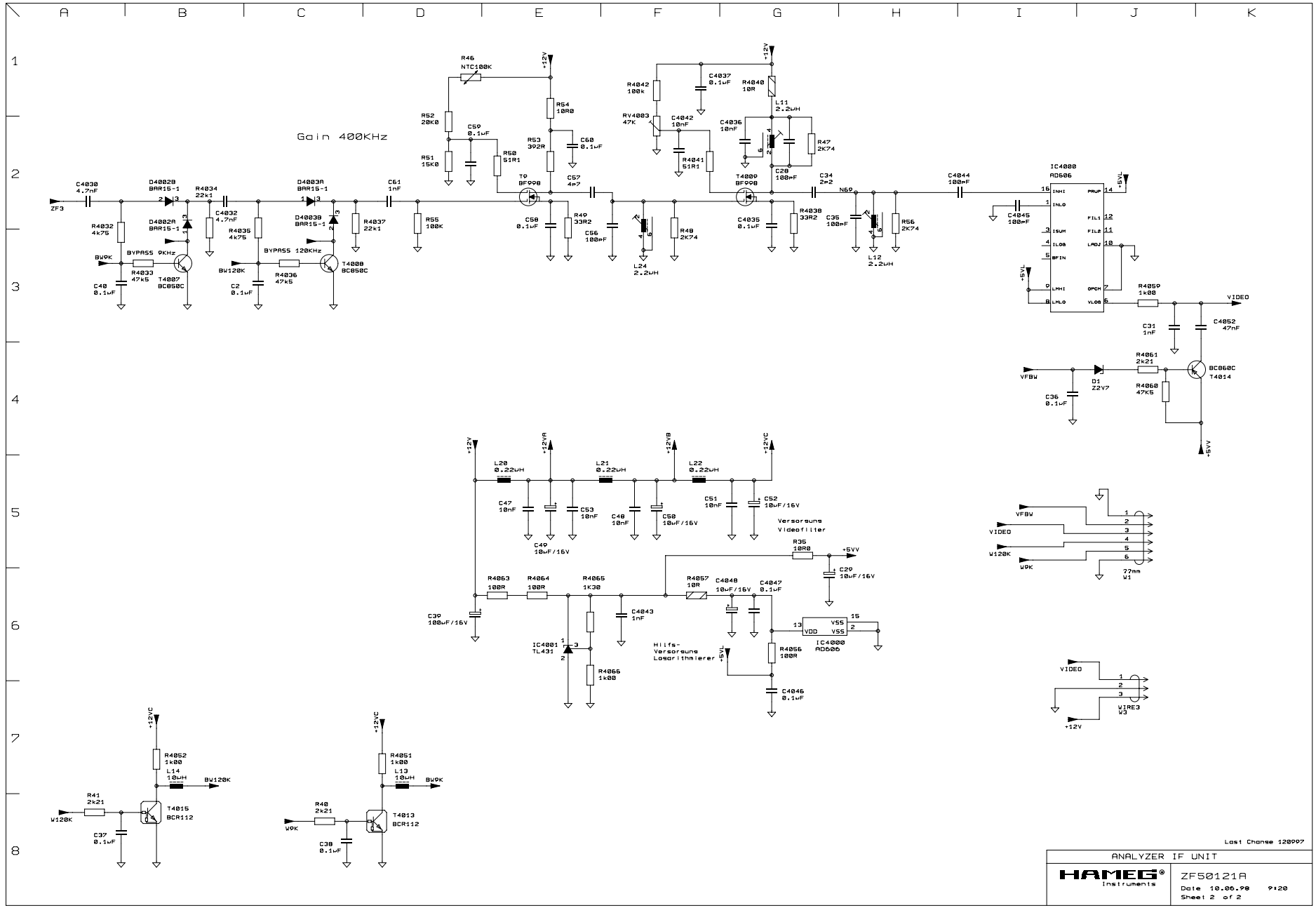
Gain 400KHz
BYPASS 9KHz
BYPASS 120KHz
Versorgung Videofilter
Hilfs-Versorgung Logarithmierer
ANALYZER IF UNIT
HAMEG Instruments
ZF50121A
Date 10.06.98 9:20
Sheet 2 of 2
Last Change 120997

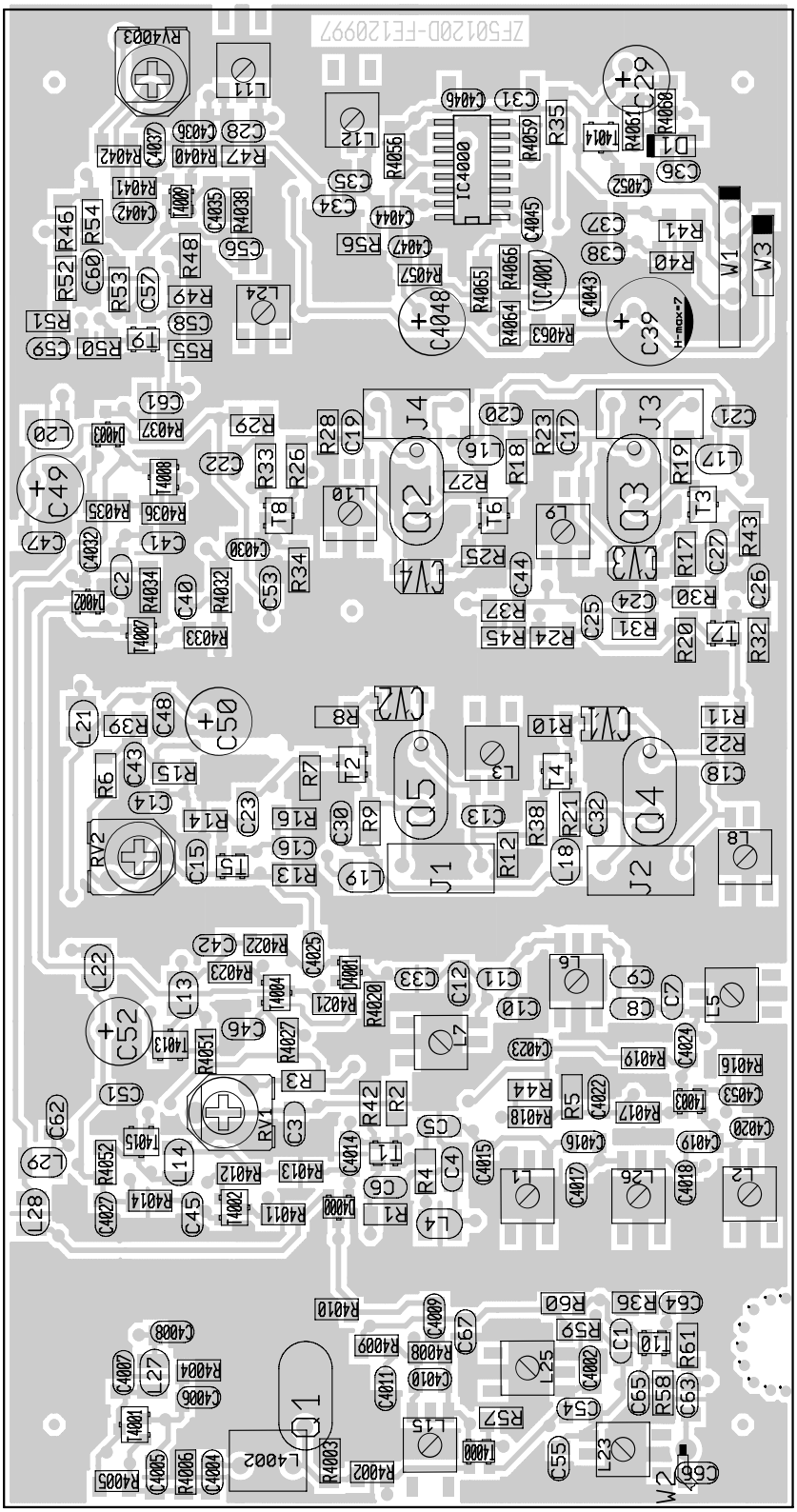
ZF5012OD-FE120997
IC4000
IC4001
Q1
Q2
Q3
Q4
Q5
J1
J2
J3
J4
W1
W2
W3
H-max=7

ZF Board - Bottom side

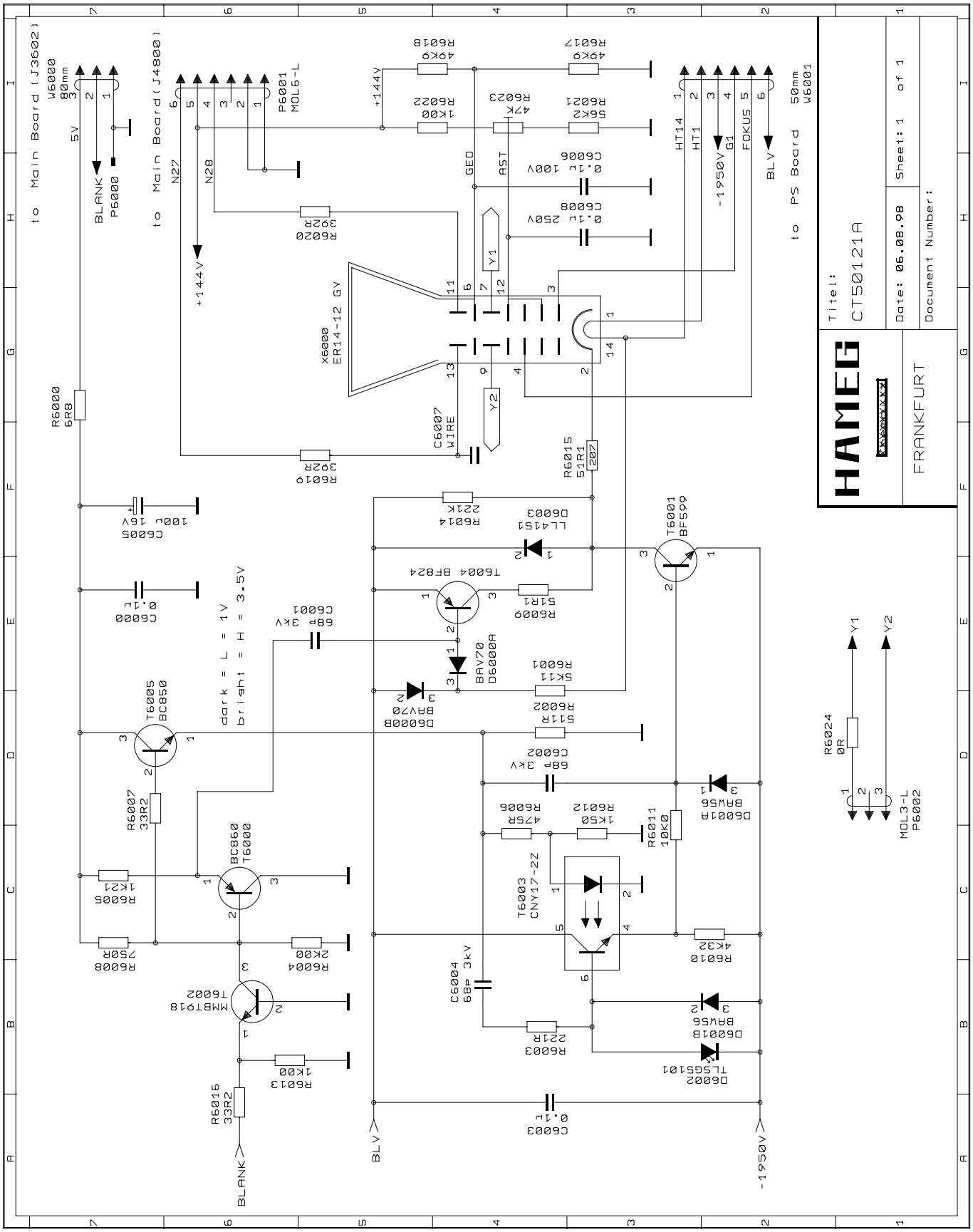
to Main Board (J3602)
W6000
80mm
5V
BLANK
P6000
to Main Board (J4800)
N27
N28
P6001
MOL6-L
+144V
R6018
49K9
R6017
49K9
R6022
1K00
R6023
47K
R6021
56K2
GEO
AST
C6006
0.1µ 100V
C6008
0.1µ 250V
HT14
HT1
-1950V
G1
FOKUS
BLV
to PS Board
50mm
W6001
R6020
392R
Y1
X6000
ER14-12 GY
Y2
C6007
WIRE
R6019
392R
R6000
6R8
R6015
51R1
207
C6005
100µ 16V
R6014
221K
D6003
LL4151
T6001
BF599
T6004 BF824
C6000
0.1µ
C6001
68p 3kV
R6009
51R1
dark = L = 1V
bright = H = 3.5V
BAV70
D6000A
R6001
5K11
D6000B
BAV70
R6002
511R
T6005
BC850
C6002
68p 3kV
R6007
33R2
D6001A
BAW56
R6006
475R
R6012
1K50
R6011
10K0
BC860
T6000
T6003
CNY17-2Z
R6005
1K21
R6008
750R
R6004
2K00
R6010
4K32
MMBT918
T6002
C6004
68P 3kV
D6001B
BAW56
R6003
221R
R6013
1K00
D6002
TLSG5101
R6016
33R2
C6003
0.1µ
BLANK
BLV
-1950V
R6024
0R
MOL3-L
P6002
Titel:
CT50121A
Date: 06.08.98
Sheet: 1 of 1
Document Number:
HAMEG
FRANKFURT

CRT Board - Top and bottom side

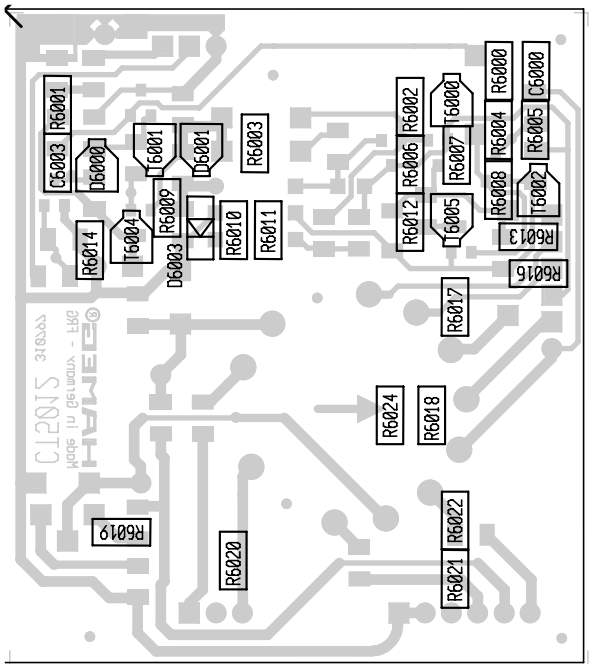

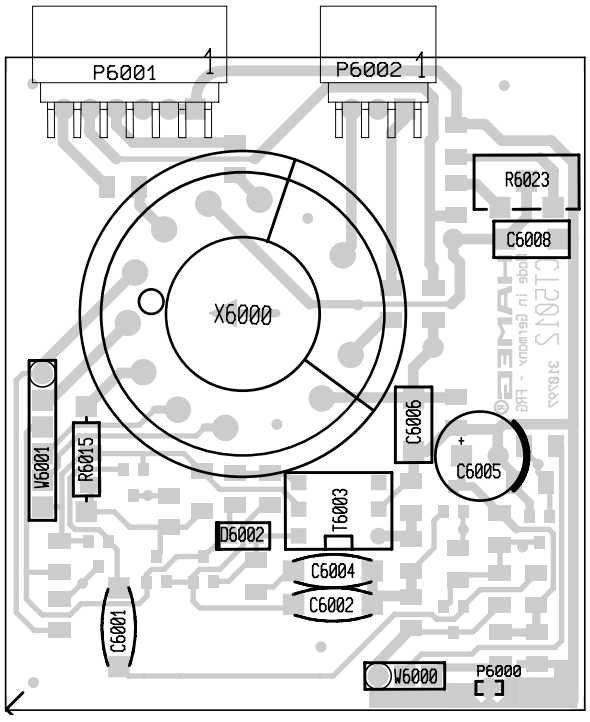

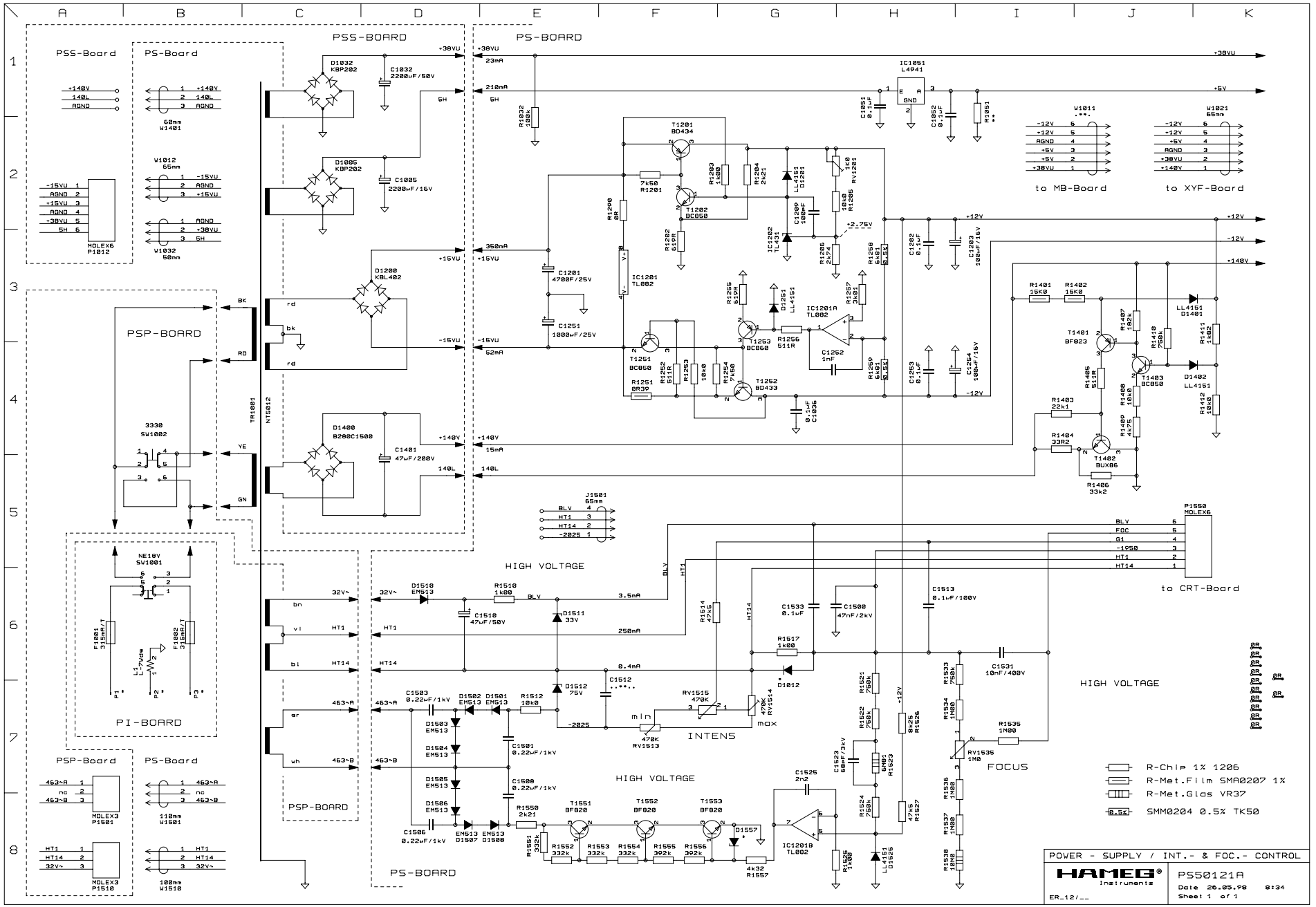
PSS-Board
PS-Board
PSS-BOARD
PS-BOARD
PSP-BOARD
PI-BOARD
PSP-Board
PS-Board
PSP-BOARD
PS-BOARD
HIGH VOLTAGE
HIGH VOLTAGE
HIGH VOLTAGE
INTENS
FOCUS
to MB-Board
to XYF-Board
to CRT-Board
POWER - SUPPLY / INT.- & FOC.- CONTROL
HAMEG Instruments
PS50121A
Date 26.05.98 8:34
Sheet 1 of 1
ER_12/__
R-Chip 1% 1206
R-Met.Film SMA0207 1%
R-Met.Glas VR37
SMM0204 0.5% TK50

PS Board - Top side

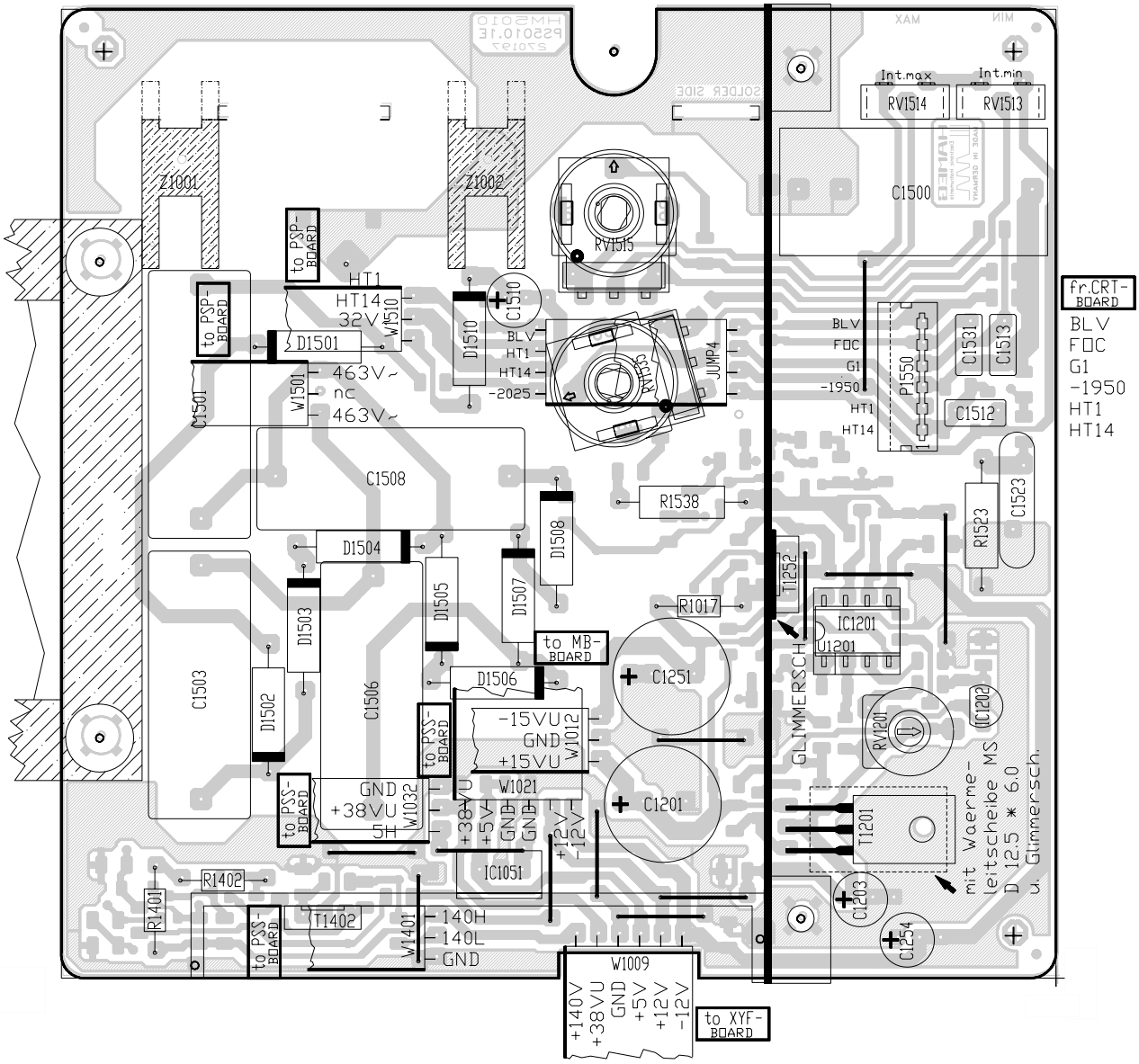

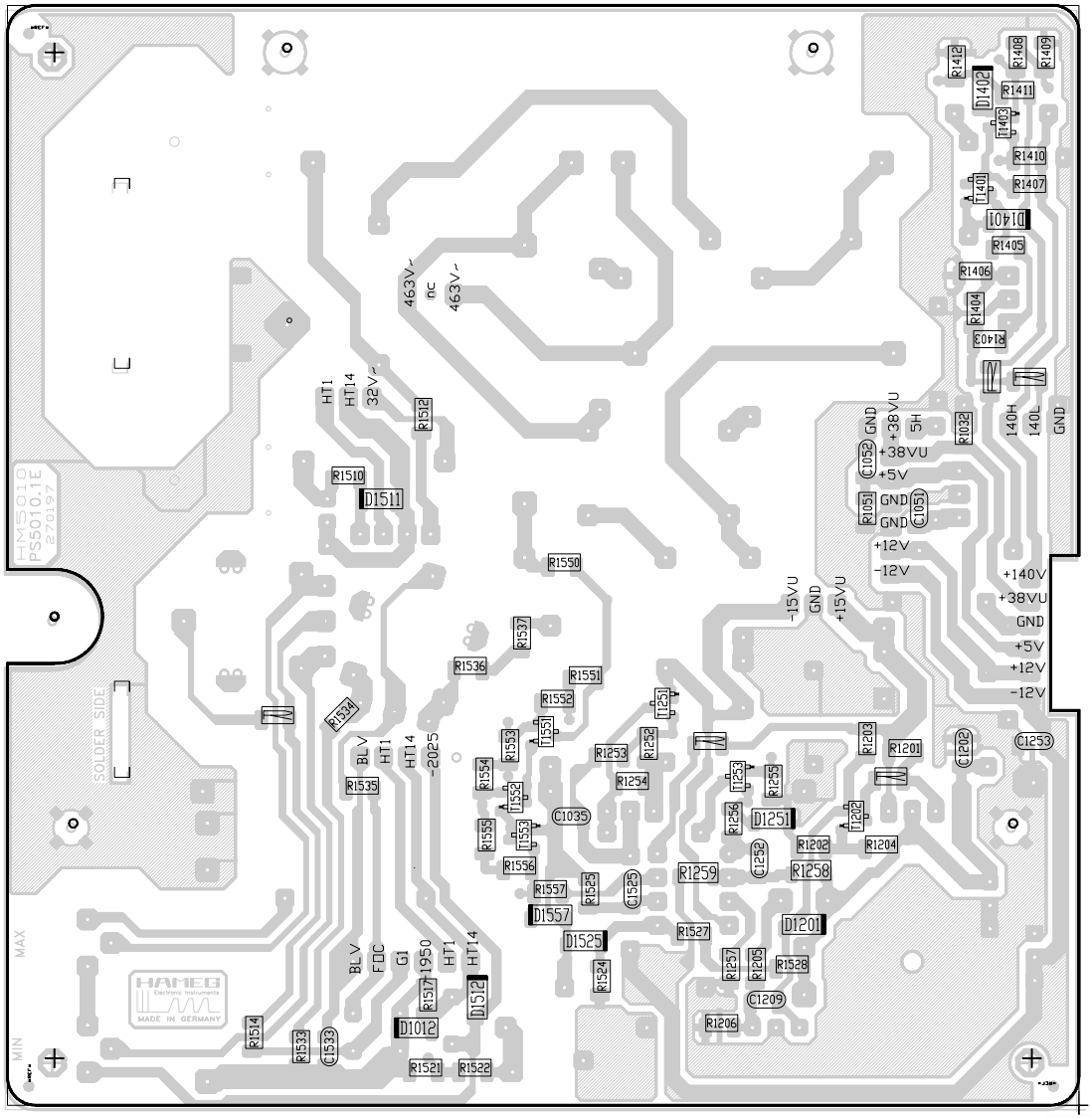
HM5010
PS5010.1E
270197
SOLDER SIDE
MAX
MIN
HAMEG
Electronic Instruments
MADE IN GERMANY
463V~
nc
463V~
HT1
HT14
32V~
R1512
R1510
D1511
R1550
R1537
R1536
R1551
R1552
R1534
BLV
HT1
HT14
-2025
R1535
R1553
R1554
R1555
R1556
R1557
D1557
D1525
R1525
C1525
R1524
R1253
R1252
R1254
T1251
T1551
T1552
T1553
C1035
R1256
D1251
R1259
R1258
R1203
R1201
C1202
C1253
R1202
R1204
R1257
R1205
R1528
C1209
R1206
R1527
D1201
BLV
FOC
G1
1950
HT1
HT14
R1517
D1512
D1012
R1514
R1533
C1533
R1521
R1522
R1412
R1408
R1409
D1402
R1411
T1403
R1410
T1401
R1407
D1401
R1405
R1406
R1404
R1403
R1032
140H
140L
GND
GND
+38VU
5H
+38VU
+5V
C1052
R1051
GND
GND
C1051
+12V
-12V
-15VU
GND
+15VU
+140V
+38VU
GND
+5V
+12V
-12V

PSP and PSS Board - Top side

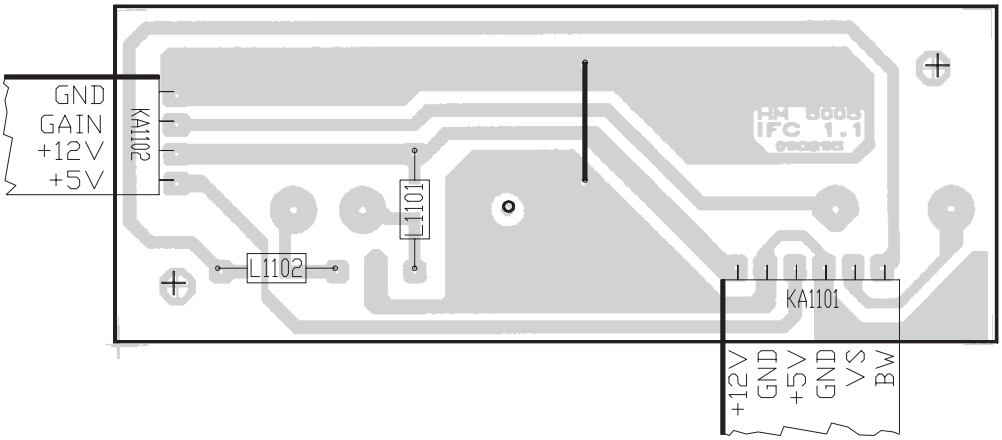

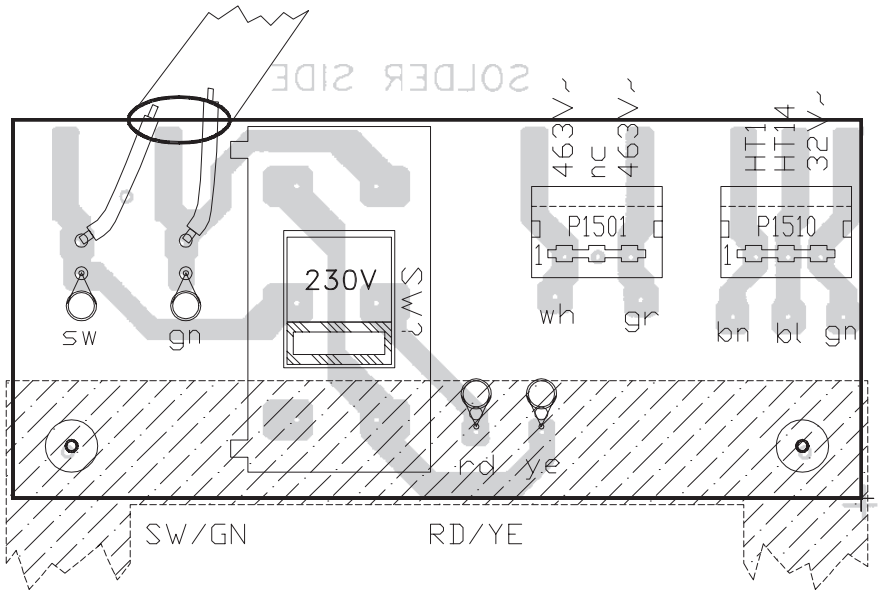

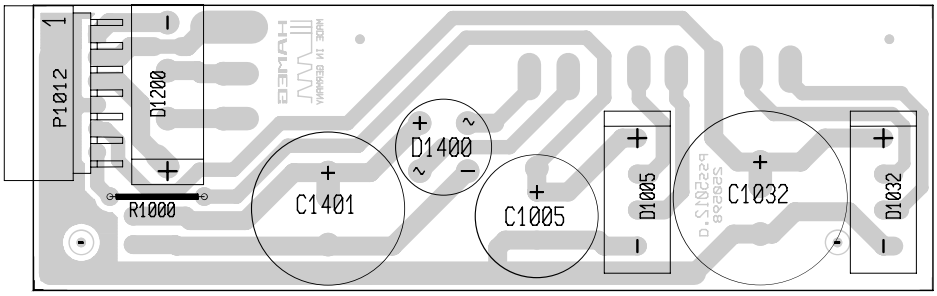

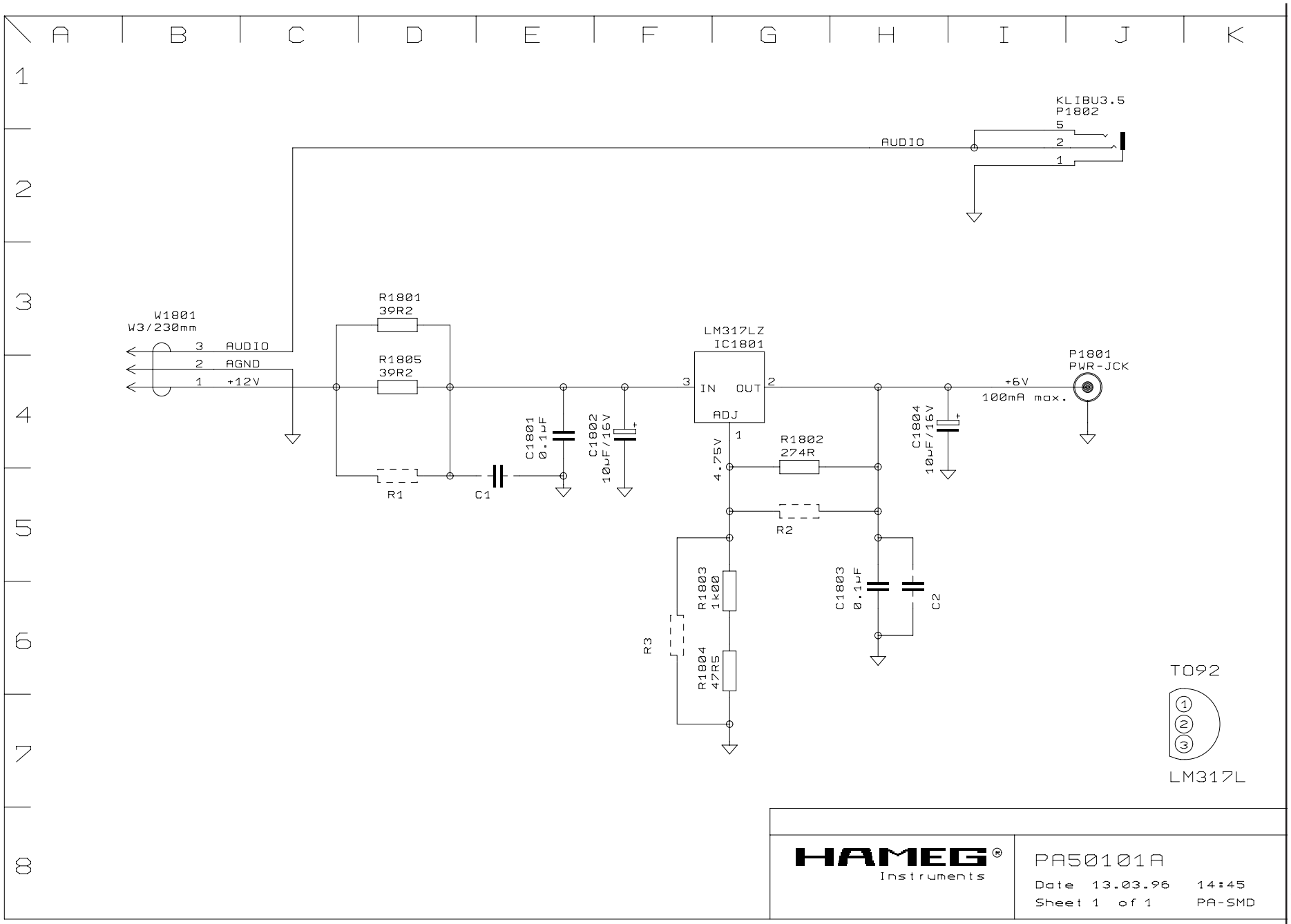

PA Board - Diagram

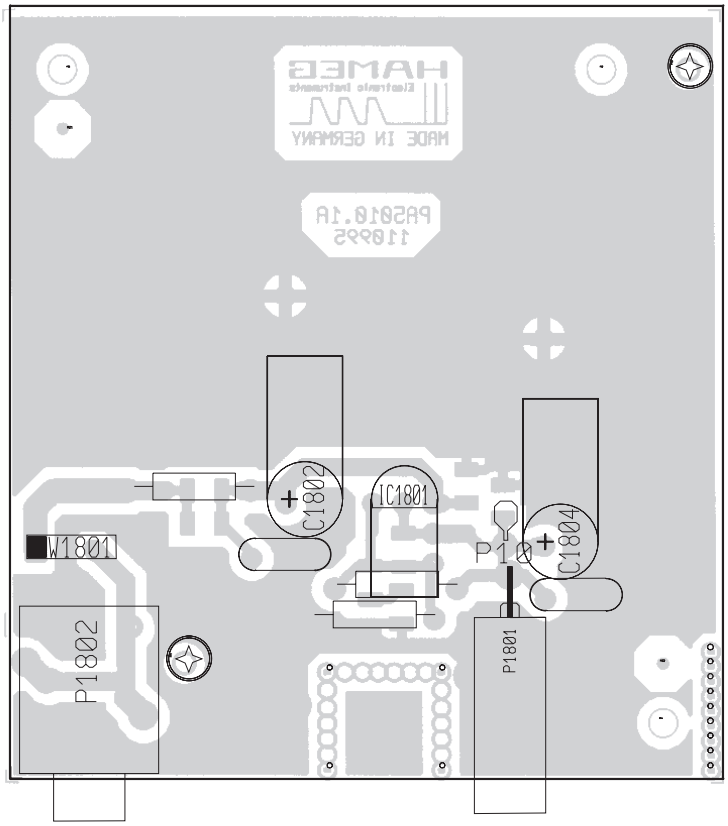
C1802
IC1801
W1801
P1802
C1804
P1801

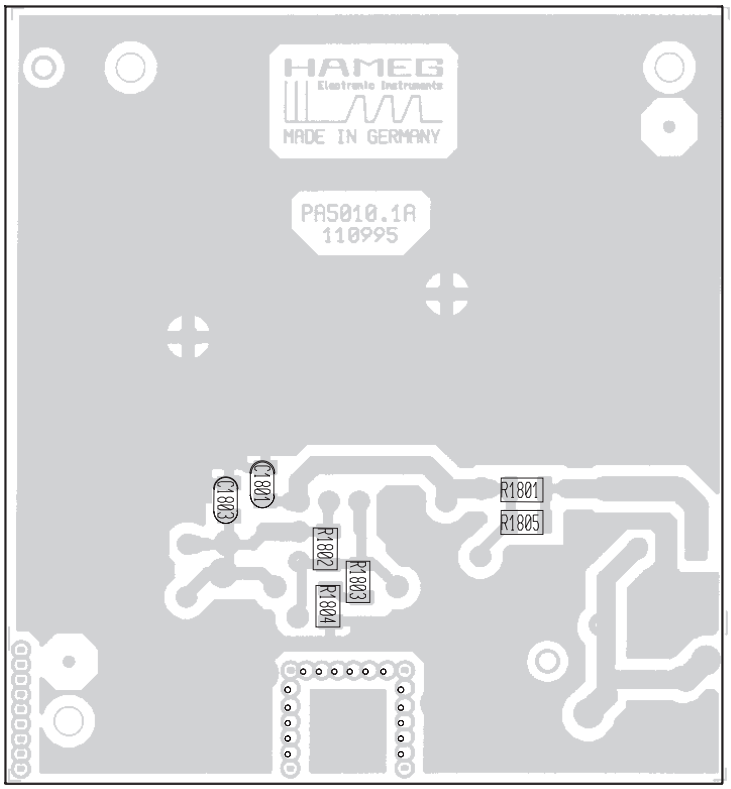
HAMEG
Electronic Instruments
MADE IN GERMANY
PA5010.1A
110995
C1803
C1801
R1801
R1805
R1802
R1803
R1804