Instruction Manual

for

Oscilloscopes

Type CD518, CD568

Issue : Three

Mod. Ref : 518/50 568/36

THE SOLARTRON ELECTRONIC GROUP LTD

THAMES DITTON · SURREY · ENGLAND

Telephone: EMBerbrook 5522 *Telegrams and Cables: Solartron, Thames Ditton*

Telex: 23842 Solartron T Dit

PRINTED IN ENGLAND

www.TheValvePage.Com

1.3 Minimum trigger voltages required

(1) Time-base delay inoperative:—
1v trigger pulse.

(2) Time-base delay in use:—
2v trigger pulse.

(3) Triggering from sine wave:—
5v r.m.s.

1.4 Time measurement

CD 568 Sinusoidal calibration waveforms are provided at 1 Mc/s, 100 kc/s and 10 kc/s. Accuracy ± 5%.

CD 518 A sinusoidal calibration waveform at 1 Mc/s or calibration pulses at 1μsec or 10μsec intervals may be selected. Accuracy ± 5%.

1.5 Power supplies

The Oscilloscope requires 230v r.m.s. at 50 c/s, and consumes approximately 100 watts.

1.6 Size and weight

The Oscilloscope is in one box, approximately 8½" × 11" × 20", and weighs 40 lb.

2. THE Y-PLATE AMPLIFIER

Reference should be made to the simplified circuit diagram, Fig. 2, and the complete circuit diagram, Fig. 8.

The Y-plate amplifier has 6 fixed gain positions enabling signals from 500v to 1v peak amplitude to be handled. On gain positions 1 and 2, for 500v and 100v Y-input signals, a capacity-corrected resistance attenuator precedes the cathode follower (V21), thereby limiting the maximum input signal to the cathode follower to 30v peak. On the other gain positions, the Y-input signal is less than 30v peak amplitude and is fed direct to the grid of the cathode follower which provides a low output impedance to drive the main amplifier (V23 and V22). The main amplifier is of the anode follower type in which the feed back impedance (R96 and C57) remains fixed and the various gains are obtained by switching the input impedance (R91-94 and C51-56). The main amplifier is followed by a similar anode follower of unity gain which provides a paraphase signal enabling the Y-plates of the cathode-ray tube to be fed in push-pull.

The amplifiers differ from the conventional anode follower circuit by using a valve (V22) as the anode load instead of the usual fixed resistor. This modification has the advantage, when the amplifier has a capacity load on the output (such as is presented by the Y-plates),

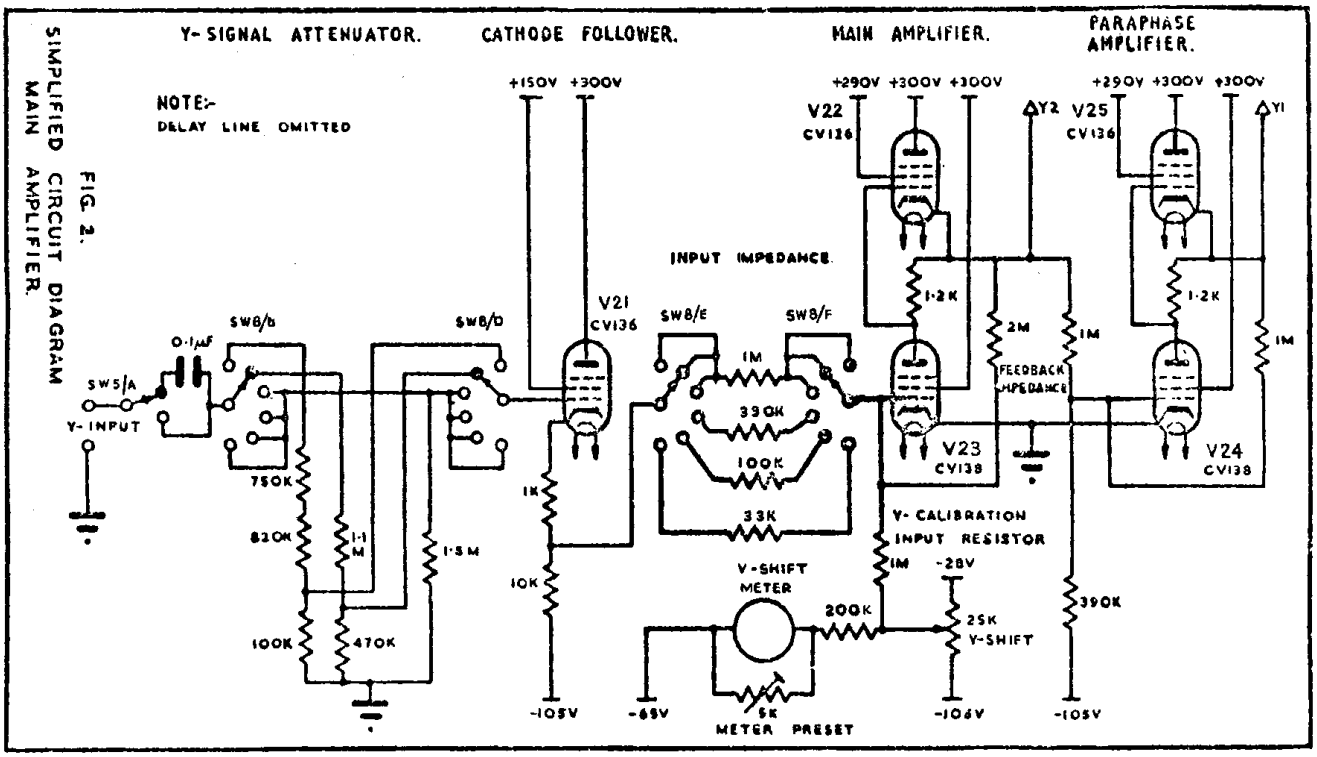

www.TheValvePage.Com

of producing an improvement in the frequency response and a greater maximum rate of change of output voltage for a given power consumption. Briefly, the operation of the amplifier is analogous to that of a Class AB amplifier. If the input signal demands that the output voltage shall fall rapidly, the bottom valve (V23) discharges the load capacity on the output, while for a rapidly rising output voltage, the load capacity is charged by the top valve (V22). In the static condition the standing current of V22, V23 is 9 mA, but the current available to charge and discharge the capacity load on the output is approximately 25 mA—i.e., the maximum current V22 or V23 will pass when operating near zero grid bias. Thus for a given maximum rate of change of output voltage this type of amplifier effects a considerable economy in HT current compared with the usual amplifiers employing a fixed resistor as the anode load.

The calibrated Y-shift is obtained by injecting a D.C. voltage (which is measured by the Y-shift meter) into the amplifier by means of R97. On range 3 of the gain switch, the Y-input signal and the Y-calibrating voltage are fed into the " virtual earth " of the amplifier by equal resistors (R91 and R97) so that the voltage measured at the slider of the Y-shift potentiometer (RV10) gives a direct calibration of the sensitivity of the amplifier. On the other gain positions, either the Y-signal input resistor is of a different value from that feeding the calibration voltage or the Y-signal is attenuated by the attenuator preceding the cathode follower so that the voltage measured by the Y-shift meter has to be multiplied by the appropriate scale factor. The Y-signal is slightly attenuated by the cathode follower and in order to keep the Y-calibration correct this is compensated by the adjustment of a preset variable resistor (RV9) which shunts the Y-shift meter.

The Y-signal can be delayed 0·6μS by a distributed delay line which is switched between the cathode follower and the input impedance of the main amplifier. Since the delay line is matched at both the input and output, it introduces 6 dB attenuation in the amplifier gain. The method of construction of this delay line is described in T.R.E. Memo. 807.

3. THE TIME-BASE CIRCUIT—TRIGGER SIGNAL AMPLIFIER, GATE CIRCUIT AND TIME-BASE DELAY

3.1 Reference should be made to the simplified circuit diagram, Figs. 3 and 4, and to the complete circuit diagram, Fig. 8.

3.2 Trigger signal amplifier

The trigger signal is fed into the left-hand grid of the double triode V2 which forms a long-tailed pair amplifier, and produces an amplified version of the trigger signal in push-pull at the anodes.

Switch SW1/A selects one of the anode waveforms of V2 and enables a negative pulse to be fed to the gate valve (V5) irrespective of the sign of the trigger input pulse. The gate valve produces a suitable pulse to trigger the time-base generator and rejects any input trigger pulses occurring during the period of the time-base sweep and fly-back.

Provision is also made to enable the time-base to be triggered by a sinusoidal input signal. (See Fig. 4.) The trigger amplifier (V2) is changed into a cathode-coupled multivibrator by condenser-coupling a tap on the anode load of the left-hand valve to the grid of the right-hand valve. With no trigger input the multivibrator has a relaxation oscillation time of 50 mS. This circuit behaves as a regenerative squaring circuit and the injection of a sinusoidal trigger signal of amplitude greater than 5v r.m.s. causes the multivibrator to change state at the same frequency as the input signal, producing a pulse to drive the gate valve, and so trigger the time-base generator.

3.3 Gate circuit

The gate valve (V5) is a short suppressor base pentode, which, in the quiescent condition, is passing current through the primary of the differentiating pulse transformer (T1) in its anode circuit. On receiving a negative pulse

www.TheValvePage.Com

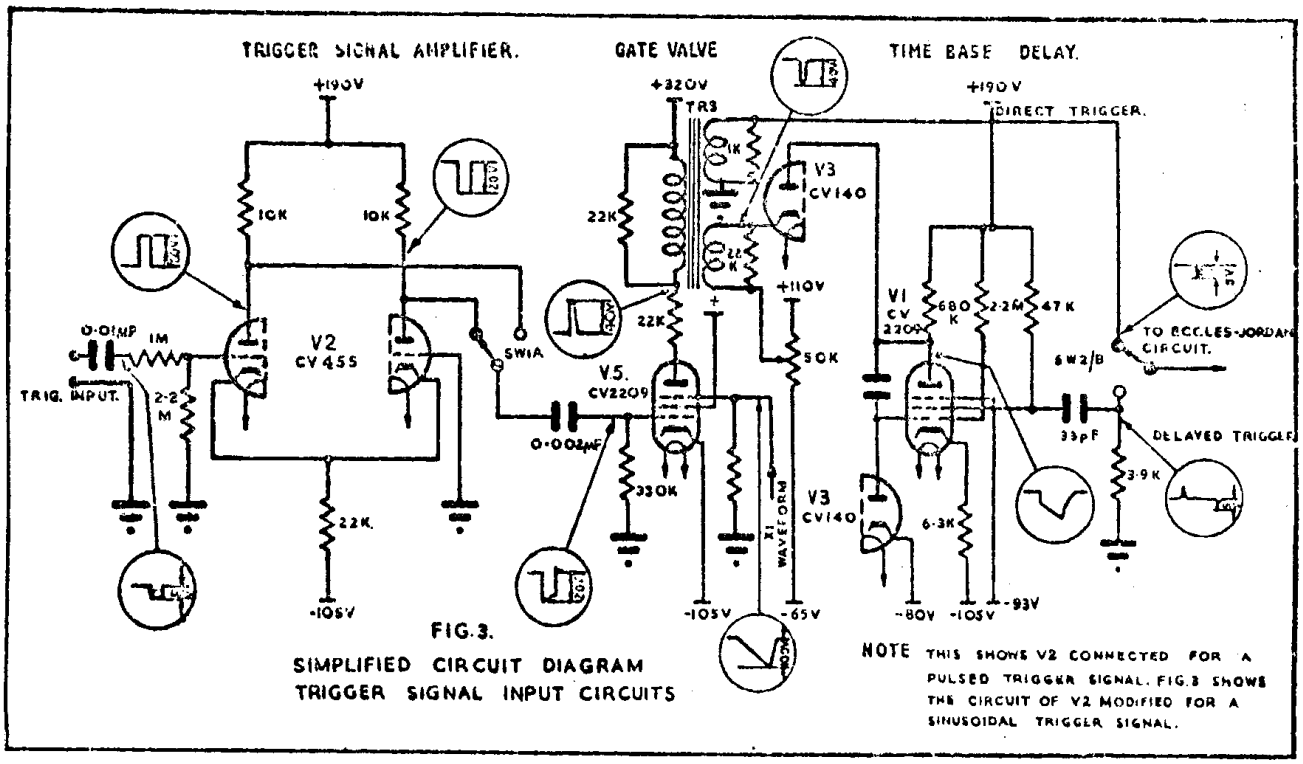

FIG.3.
SIMPLIFIED CIRCUIT DIAGRAM
TRIGGER SIGNAL INPUT CIRCUITS

NOTE THIS SHOWS V2 CONNECTED FOR A PULSED TRIGGER SIGNAL. FIG.3 SHOWS THE CIRCUIT OF V2 MODIFIED FOR A SINUSOIDAL TRIGGER SIGNAL.

from the trigger amplifier the valve is cut off on the grid, creating a positive pulse at the anode, which is phase-inverted and differentiated by the transformer. The negative differentiated pulse is used to trigger the time-base generator. The negative-going saw-tooth waveform from the time-base generator is fed to the suppressor of the gate valve (V5) which maintains the gate valve cut off, and prevents any succeeding trigger pulses being passed to the time-base generator until a time-base sweep and fly-back has been completed. This enables the time-base generator to be triggered satisfactorily when the period of the time-base is adjusted to be several times greater than the interval between trigger pulses.

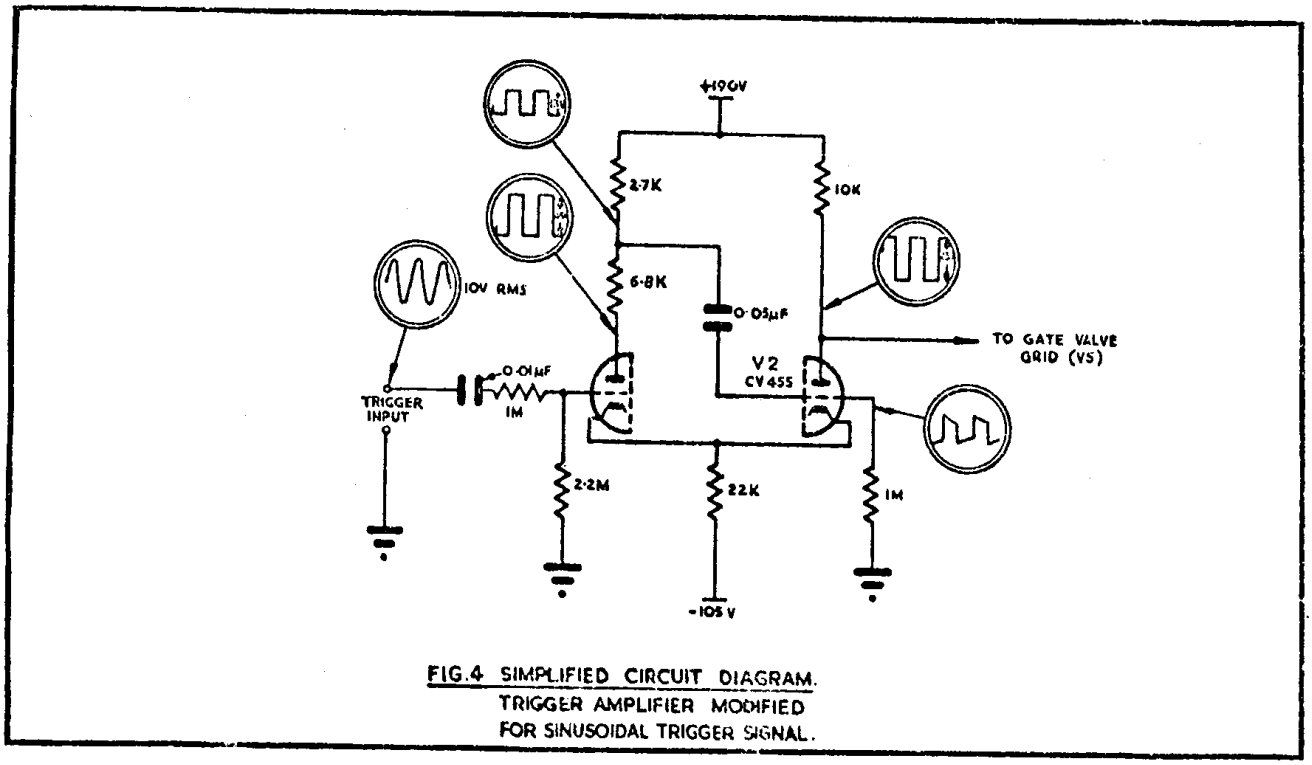

FIG.4 SIMPLIFIED CIRCUIT DIAGRAM.
TRIGGER AMPLIFIER MODIFIED FOR SINUSOIDAL TRIGGER SIGNAL.

www.TheValvePage.Com

3.4 The time-base delay

The time-base delay consists of a conventional Phantastron (Ref. 2) which is " anode triggered " by a negative pulse from a secondary winding on the pulse transformer (T1). A negative, delayed pulse to trigger the time-base generator is obtained by differentiating the screen waveform of V1. The time-base delay is brought into operation by SW2/B. Three ranges of delay are provided by switching (SW2/A) the anode-to-grid condensers, and fine adjustment of the delay is obtained by controlling (by means of RV1) the voltage at which the anode run-down commences.

4. THE TIME-BASE CIRCUIT—TIME-BASE GENERATOR

4.1 Reference should be made to the simplified circuit diagram, Fig 5, and to the complete circuit diagram, Fig. 8.

4.2 The time-base generator uses the bootstrap principle (Ref. 1). V14 produces an approximately constant current to charge the time-base range condensers (C23 to C26), and they are discharged by V13 which functions as a switch. The double triode (V10) is connected as an Eccles-Jordan trigger circuit and is used to control the switch valve (V13).

In the absence of a trigger signal, the left-hand grid of V10 is at earth potential; therefore, the right-hand triode (V10) is not conducting, and its anode is at approximately HT potential. This anode is D.C. coupled by a resistance potentiometer to the grid of the switch valve (V13), and in the quiescent condition V13 is conducting and the time-base range condenser is discharged. The grid of the bootstrap valve (V14) is prevented from falling below earth potential by a diode (V12), and the magnitude of the cathode current can be controlled by the variable resistor (RV2) which provides a fine velocity control for the time-base generator.

On injecting a trigger signal, a negative pulse is fed into the left-hand grid of the Eccles-Jordan circuit (V10) via a diode (V7), causing it to change over so that the left-hand valve is cut off and the right-hand valve conducting. This change of state drives the grid of the switch valve (V13) negative, and the constant current produced by the bootstrap

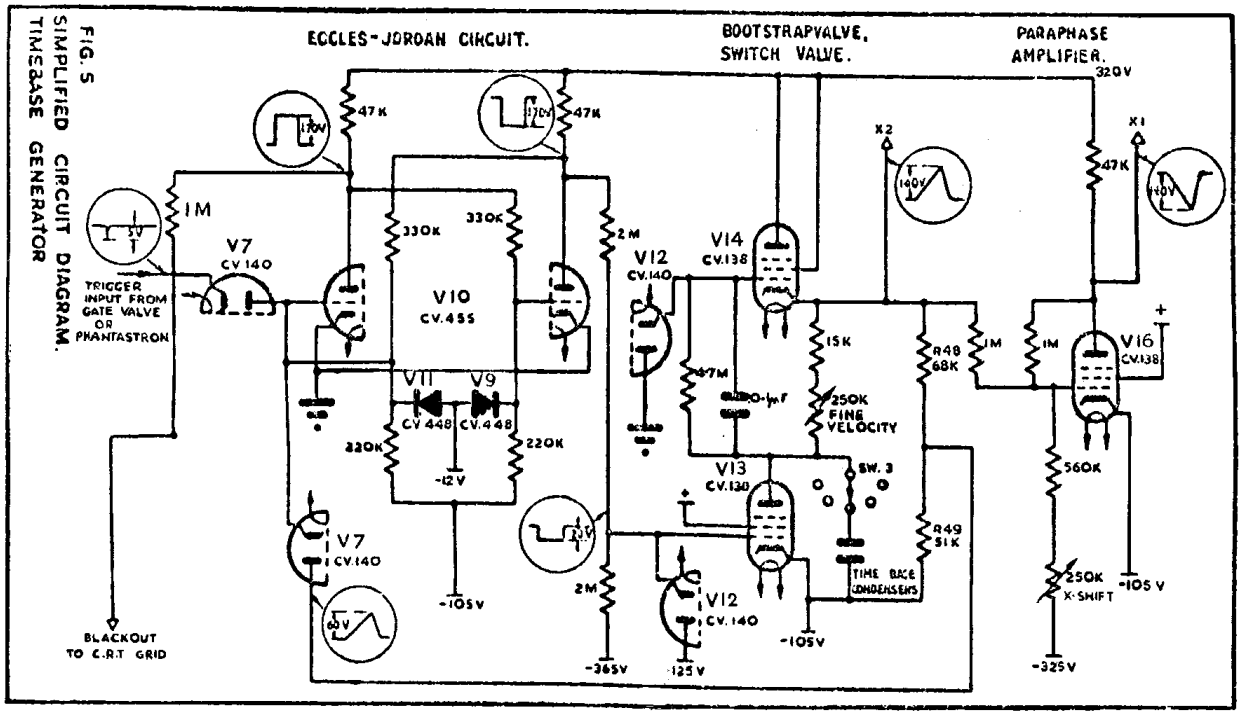

www.TheValvePage.Com

valve (V14) flows into the time-base condenser, resulting in a linear voltage rise at the cathode of V14 which is fed to the X2 plate of the cathode ray tube.

The fly-back is initiated by feeding the X2 waveform via a resistance potentiometer (R48 and R49) through a diode (V7) to the left-hand grid of the Eccles-Jordan circuit. The voltage at the cathode of V14 continues to rise linearly until the voltage at the junction of R48 and R49 reaches a potential such that the left-hand triode of V10 begins to pass current again. This causes the Eccles-Jordan circuit to be triggered back to its original state, the switch valve conducts, and the time-base condenser is discharged. The time-base generator is now back in the quiescent condition ready to be retriggered by the next input trigger pulse.

A paraphase version of the X2 waveform is obtained from a unity-gain anode follower (V16) enabling the X plates of the cathode ray tube to be fed in push-pull. X-shift is introduced by controlling the D.C. current fed into the " virtual earth " of the paraphase amplifier (V16) by means of the variable resistor RV4.

5. TIME CALIBRATOR

CD 568 only

5.1 Reference should be made to the simplified circuit diagram, Fig. 6, and the complete circuit diagram, Fig. 8.

5.2 The calibrator consists of a triode (V20) with a parallel-tuned circuit in the cathode. In the quiescent state, the grid is at earth and the cathode resistor (R76) is chosen so that a current of approximately 5 mA flows through the tuned circuit. The grid of the calibrator is driven negative for the duration of the time-base sweep by a rectangular waveform, fed from the right-hand anode of the Eccles-Jordan circuit. During this time the energy stored in the cathode tuned circuit produces a damped sinusoidal oscillation at the resonant frequency of the tuned circuit, which is fed into the Y-plate amplifier via switch SW6/C. Three calibration frequencies are provided by switching the tuned circuit in the cathode.

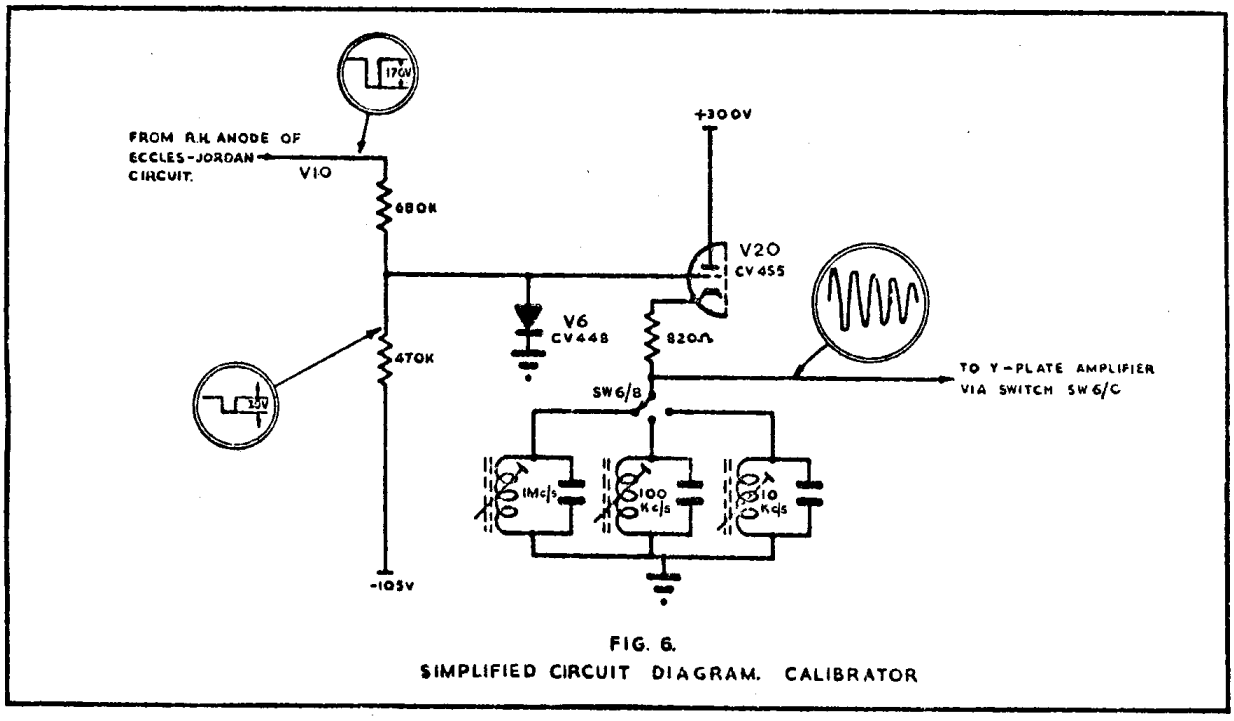

FIG. 6.
SIMPLIFIED CIRCUIT DIAGRAM. CALIBRATOR

www.TheValvePage.Com

CD 518 only

5.3. To measure the interval between a phenomena occurring during the time base delay period and a phenomena on the trace, markers must be generated from the occurrence of the trigger phenomena until the end of the time-base sweep. The marker oscillator must be stopped during the time-base flyback, in order to synchronise the markers to the oscilloscope trace. A block diagram of the time-base and marker generator system is given in Fig. 10; the block capital letters refer to the waveforms given in Fig. 11, circuit components are designated in accordance with the CD 518 circuit diagram (Drawing No. DC 518).

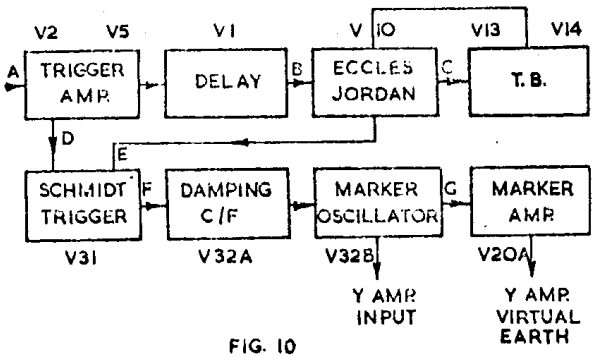

FIG. 10

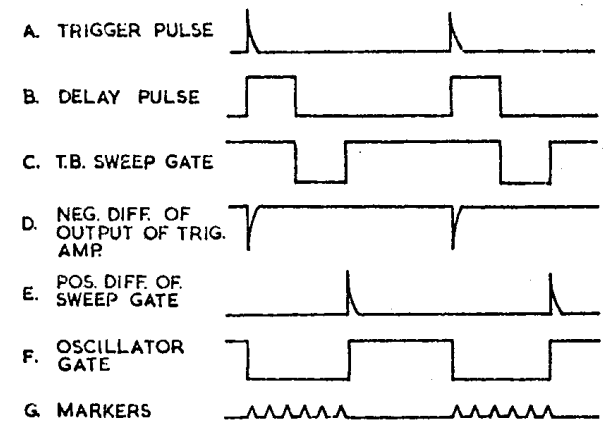

FIG. 11

5.4 Marker Generator and Damping Cathode Follower (V32–12AT7)

Half of a 12AT7 valve (V32A) is employed in a conventional tuned grid Class C oscillator circuit. Tuning is achieved by L8, C72 on the 10μSec. position, and by L6, C71 on the 1μSec. and 1 Mc/s ~ positions. When the time marker switch is set to 1 Mc/s ~, the oscillator tank circuit is coupled via C84 to the Y-amplifier input, and C85 (39pF) is disconnected from the tank circuit to compensate for the Y-amplifier input capacitor. The oscillator can be tuned approximately ± 10% of its nominal frequency, by the adjustment of the cores of L6 and L8. The grid coupling capacitors C73, C74, are selected by a switch SW6D, to reduce the build-up time of the oscillator to a minimum, while maintaining Class C operation.

The left-hand section of V32 operates as a cathode follower, which is connected across the tuned circuit to quench the oscillator during the resting and flyback periods of the time base.

In order to synchronise the markers to the cathode ray tube trace, the valve is switched on and off by the waveform from the Schmidt trigger (V31).

5.5 Time-Marker Amplifier (V20A–½12AT7)

The time markers which are developed across R135 (47Ω) in the cathode of the oscillator are applied to the grid of V20A. This stage, which operates as a Class A amplifier, also inverts the markers before they are injected into the Y-amplifier paraphase stage, via blocking capacitor C77, video coupling components R138, C78, and switch SW6E.

5.6 Oscillator Gate (V31–12AT7)

During the resting and fly back periods of the time base, the Schmidt trigger (V31) is in a condition where the anode current of the left-hand section of V31 is cut off. The potential at the grid of the damping cathode follower (V31B) is such that this valve conducts, placing a low impedance across the oscillator tank circuit.

When a trigger pulse is applied to the oscilloscope, the negative differential of the output waveform of the trigger amplifier (V2) cuts off the right-hand section of V31, thus reversing the state of the Schmidt trigger. The grid coupling network of the damping cathode follower is between the output of V31 and the —105V rail. This, plus the reversal of the trigger, is sufficient to cut off the damping cathode follower, allowing the marker generator to oscillate. Oscillation continues until the Eccles Jordan valve (V10) is reset by the time base, when the positive differential of the sweep gate returns the Schmidt trigger to its original state.

The diodes V29 and V30 suppress the negative differential of the sweep gate and the positive differential of the trigger waveform respectively. Resistors R119, R124 and R129 limit the potential variations caused by the build-up of tolerances.

www.TheValvePage.Com

6. H.T. POWER SUPPLIES

6.1 Reference should be made to the simplified circuit diagram, Fig. 7, and to the complete circuit diagram, Fig. 8.

6.2 The Oscilloscope circuits require a stable --105v negative HT line, to simplify the circuit design and to obtain reliable operation, but are not critical with regard to the HT positive lines.

The main HT supply is unstabilised and consists of a common 400-0-400v r.m.s. secondary winding on the mains transformer (T2) supplying two separate full-wave rectifiers (V27 and V17). Each rectifier has its own condenser input filter, thus providing two HT lines. The time-base circuit, which takes a fluctuating current and modulates the time-base HT line, especially when the time-base is operating at or near minimum velocity, is supplied from one HT line, and the Y-plate amplifier, which takes a steady current, is supplied from the other HT line. The steady current taken by the amplifier passes through a 105v neon (V26), the positive electrode of which is earthed, thus providing a stable —105v line.

A stable and smooth HT supply for the screen of the input cathode follower (V21) is provided by a shunt stabilising valve (V20).

The Oscilloscope will work satisfactorily on mains voltages which are ± 10% of the nominal 50 c.p.s./ 230v r.m.s. input.

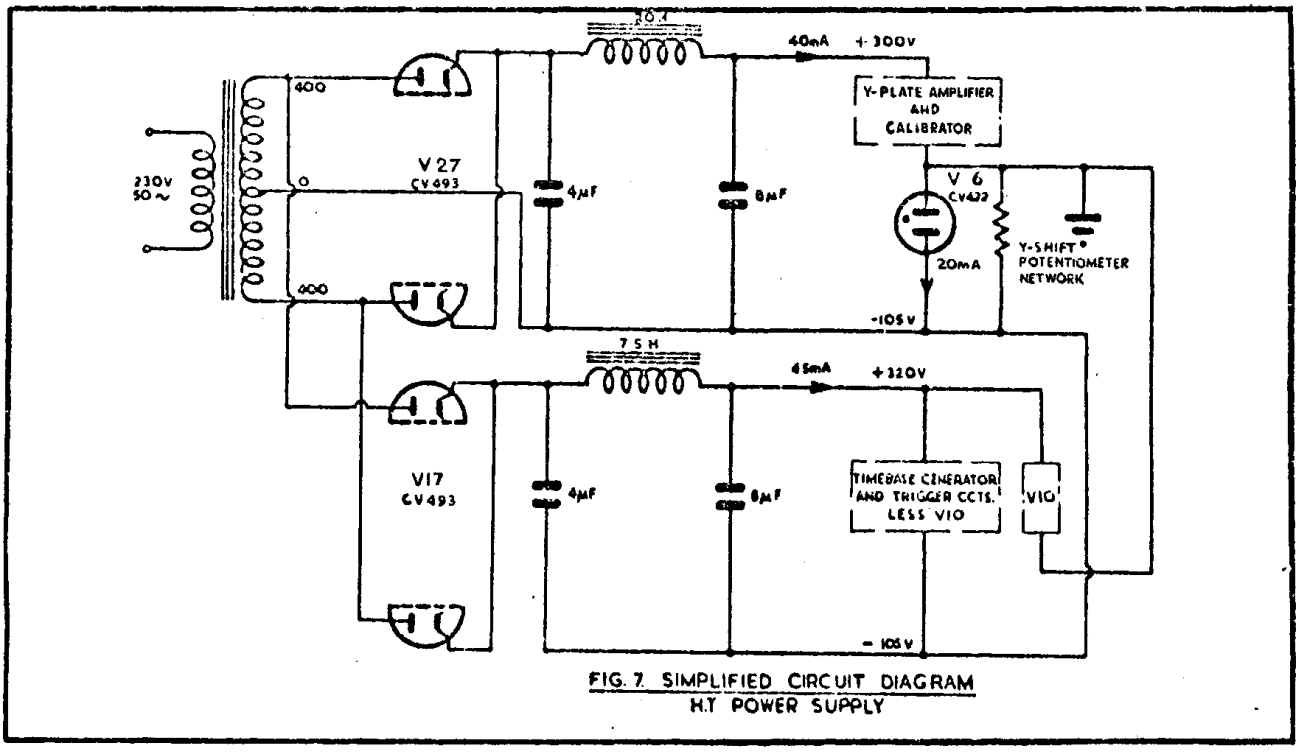

FIG. 7. SIMPLIFIED CIRCUIT DIAGRAM H.T. POWER SUPPLY

7. MECHANICAL CONSTRUCTION

The mechanical design of the Oscilloscope was undertaken by Mr. E. N. Shaw. As a result of Mr. Shaw's work, the accessibility of the components is very good and his careful attention to heat distribution has resulted in a reliable instrument. The principles and methods of construction used will be the subject of a future T.R.E. Memorandum.

8. REFERENCES

1. M.I.T. Radiation Laboratory, Volume 19, " Waveforms," Sec. 7, 8, p. 270.

2. Journal I.E.E., Vol. 93, Part IIIA, No. 7, 1946. " Ranging circuits, linear time-base generators and associated circuits." F. C. Williams and N. F. Moody, p. 1193, para. 5.1.

www.TheValvePage.Com

SETTING UP AND TEST PROCEDURE

List of test equipment required.

Variable voltage transformer	e.g. Variac
Multi-range meter	e.g. Avo Model 8
Square-wave generator.	e.g. Cintel
Sub-standard d.c. Voltmeter (better than ±1%)	
D.C. power supply (variable voltage)	e.g. Solartron SRS153S (CT397)
Test oscilloscope	e.g. Solartron CD513
Test oscillator 20 c/s - 1 Mc/s ±1%	
Pulse generator PRF. 1 Kc/s - 1 Mc/s ± 1%	
Valve Voltmeter	e.g. Marconi TF 428

Initial Setting Up.

Connect the instrument to the supply main through the variac. Set the mains voltage selector on the instrument under test to 230V, and set the supply to the same voltage ±1%. Switch SW9 to L.T. and allow one minute for the valve heaters to warm up, then switch to H.T. Adjust the 'focus' and 'brilliance' controls to obtain a spot of minimum size at the lowest working brilliance. Excessive brilliance will give an enlarged spot, which results in loss of accuracy of measurement.

H.T. Rail Voltages.

Connect the avometer across C35 and check that the reading is between 410 and 460 volts. Measure the voltage across C63, which should be between 385 and 415 volts.

'Y' Amplifier D.C. Levels.

Set the controls as follows:-

Trigger switch (SW1)	-	A.C.
Time base velocity (SW3)	-	1
Time base velocity (RV2)	-	Fully clockwise.

The time-base should now free run. Check that the trace is horizontal and, if necessary, rotate the tube to align the trace with the graticule.

www.TheValvePage.Com

Connect the 'Y' input terminal (TL2) to earth. ж Set the 'gain' switch (SW8) to '30V F.S.' and adjust the 'Y' shift control (RV10) to bring the trace on to the horizontal graticule line. Set the 'gain' to '1V F.S.' and adjust the d.c. level preset potentiometer (RV7) to return the trace to its original position. Repeat from ж until there is no trace displacement when the 'gain' is changed from '30V F.S.' to '1V F.S.'

Time-Base Delay Check.

Set the controls as follows:-

Time-base delay (SW2) - Off

Trigger switch (SW1) - + or -

Connect an output from the square-wave generator to a trigger input socket or plug, at 5 Kc/s. Select in turn all positions of the time-base delay switch (SW2). The time-base should trigger in all positions.

Remove the trigger signal, and, with the trigger switch at '+ or -', check that the time-base does not free run in any position of the time-base velocity controls. Switch SW1 to 'a.c.' and check that the time-base does not run at any other speed than that of the internal oscillator in any position of the time-base velocity controls.

'Y' Amplifier A.C. Set Up.

Set the Cintel generator to deliver a 50/50 mark/space ratio square-wave at 5 Kc/s. Connect the square-wave to one 'Y' input and one trigger input. Set the 'input selector' (SW5) to the correct 'Y' input. Connect an 8 μFd paper capacitor from the junction of R104/R106 to earth. Set the 'gain' switch to '30V F.S.'

Set the input signal amplitude to about 15V peak-to-peak and adjust the time-base velocity to display about 5 cycles of the waveform. Adjust C51 to give an accurate replica of the input waveform.

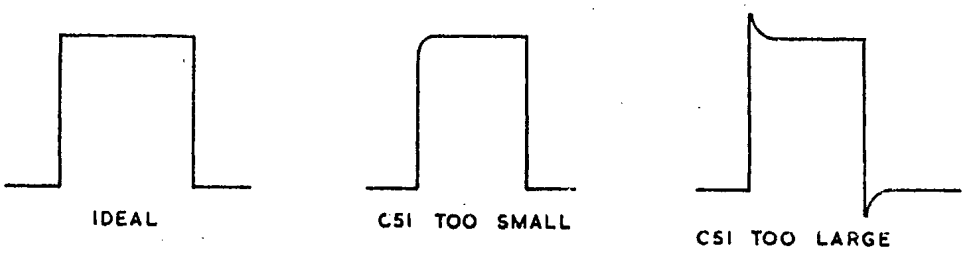

Disconnect the 8 μFd capacitor and adjust C59 for the best square-wave. Vary the input amplitude and set the 'gain' switch as shown in the table. Adjust the relevant capacitor for the best square-wave.

Input Amplitude Volts	Gain Switch	Capacitor
5	10V F.S.	C52
1.5	3V F.S.	C54
0.5	1V F.S.	C56
50	100V F.S.	C45
Max (up to 250V)	500V F.S.	C44

www.TheValvePage.Com

'Y' Shift Set Up.

Switch SW9 to 'L. T.' and adjust the mechanical zero of the meter in the oscilloscope on test.

Switch SW9 to 'H. T.', set the 'gain' (SW8) to '30V F. S.', the input signal (SW7) to 'd. c.', the time-base velocity (SW3) to '1', and the trigger selector (SW1) to 'a. c.'

Connect the 'Y' input to earth and adjust 'Y' shift (RV10) to bring the trace to the horizontal line on the graticule. Remove the earth from the 'Y' input. Connect +30V d. c. ±1% to the selected 'Y' input socket. The trace will move in a 'Y' direction up the screen. Use the 'Y' shift control to return the trace to the centre line, and check that the meter reads to the left. Adjust the preset meter sensitivity control (RV9) to obtain full scale deflection. Reverse the polarity of the input signal, and check that when the trace is re-centred by the 'Y' shift control the meter reads F.S.D. ±3% to the right.

Select the other settings of the 'gain' control (SW8) in turn and, using a positive input only, check the F. S. D. accuracy as above. The results should be as follows:-

Range	D. C. Input Voltage	Accuracy
'1V F. S.'	+1V	±8% F. S.
'3V F. S.'	+3V	±5% F. S.
'10V F. S.'	+10V	±5% F. S.
'100V F. S.'	+100V	±5% F. S.
'500V F. S.'	+500V	±5% F. S.

Switch the 'gain' (SW8) to 100V F. S. Remove all input signals, turn the meter 'zero' control (RV8) fully anti-clockwise, and adjust the 'Y' shift so that the meter reads 100V to the left. Turn the meter 'zero' control (RV8) fully clockwise and check that the meter deflects towards the right, with a total deflection between 87 and 145 volts.

'X' Shift Control Set Up.

Set the trigger switch (SW1) at '+ or -' and remove all trigger signals. Set the 'X' shift control (RV3) to mid-traverse, and adjust RV4 so that the spot lies on, or as near as possible to, the left-hand graticule line. Check that the 'X' shift control will move the spot at least 0.2"on either side of the graticule line.

Time-Base Paraphase Amplifier.

Connect a trigger pulse of 5 Kc/s PRF to the trigger input. Set the time-base velocity (SW3) to position 4, and the 'fine' control (RV2) fully anti-clockwise. Connect the test oscilloscope from X1 to earth to monitor the waveform, and adjust C27 to give an accurate replica of the X2 waveform.

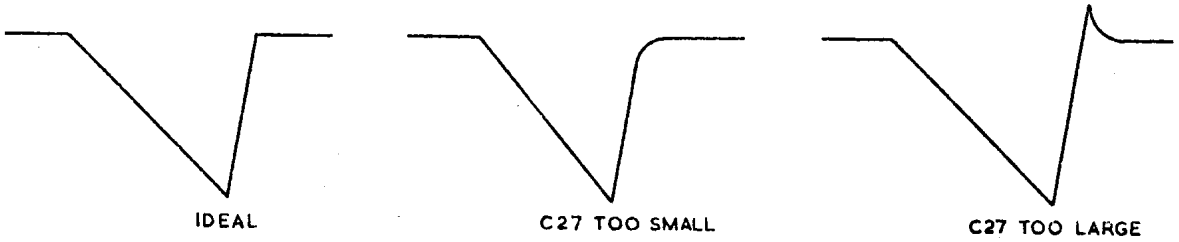

NOTE: The range of the pre-set controls gives adequate coverage for component tolerance and, with the exception of RV4, no pre-set control should be set up in its maximum or minimum position.

www.TheValvePage.Com

Time Markers (CD518 only)

Connect a 1 Mc/s ±1% sine-wave signal into the 'Y' input and trigger sockets. Adjust the amplitude to obtain a picture of approximately 4 cms. high and set the time-base velocity to a fairly low speed to obtain a 'raster' effect.

Switch the time markers to 10 μsec, and observe that ten lines appear across the raster. Adjust the core of L8/L9 until the 'Z' markers lie in a straight line. Remove the input signal, but not the trigger.

Set the time marker switch to the 1 Mc/s position and inject 1 Mc/s ±1% bright-up markers to the 'Z' input. Adjust the core of L6/L7 until the bright-up markers lie in a straight line. Remove the bright-up signal.

Set the time marker switch to the 1 μsec position; adjust the T.B. velocity controls and the 'X' shift control, to line up one marker with each graticule division. Switch the time markers back to the 1 Mc/s position and adjust the 'X' shift to align a sine-wave with the left-hand edge of the graticule. Check that the 10th cycle is no more than 0.1 of a division displaced from the right-hand edge.

Set the 'Y' 'gain' control to '1V' and the time markers to '1 Mc/s'. The vertical picture height should fill the graticule. Check that the amplitude of the marker pulses is 2mm.

Calibration Coils (CD568)

Connect a pulse to the trigger input and 'Z' input of the oscilloscope. Select in turn "1, 0.1, and 0.01" on SW6, adjusting the PRF of the pulse generator to "1 Mc/s, 100 Kc/s, and 10 Kc/s" (±1%) respectively. Adjust L3, L2 and L1 so that the bright-up marker occurs on the same part of each successive cycle.

Residual Hum and Noise.

Connect the 'Y' input to earth and set the 'Y' sensitivity to '1V F.S.'. Check that the time base is not running. Use the valve voltmeter to measure the noise between the chassis and the 'Y' plates. The residual hum and noise should not exceed 200 mV.

Frequency Response.

Connect a 5 Kc/s square-wave to the signal and trigger input sockets, and adjust the time base velocity to display about 5 cycles across the screen. Set the 'range' control as shown below and inject the relevant signal amplitude. Check that the oscilloscope displays a replica of the input waveform, free from overshoot and droop.

NOTE: Some slight rounding of corners may be noticable on the 1V range.

'Y' Sensitivity :	1V	3V	10V	30V	100V	500V
Input Voltage :	0.5V	2V	5V	20V	50V	maximum available up to 300V

Linearity

Select '30V F.S.' 'Y' sensitivity and centre the trace on the graticule. Connect a 5 Kc/s square-wave on 10V amplitude to the 'Y' and trigger input sockets and measure the signal amplitude using the 'Y' shift meter. Add 30V d.c. to the input signal through a 10KΩ resistor and re-centre the trace. Measure the square-wave amplitude with the 'Y' shift meter, and check that the reading is within ±5% of that obtained without the d.c. applied.

www.TheValvePage.Com

Gain.

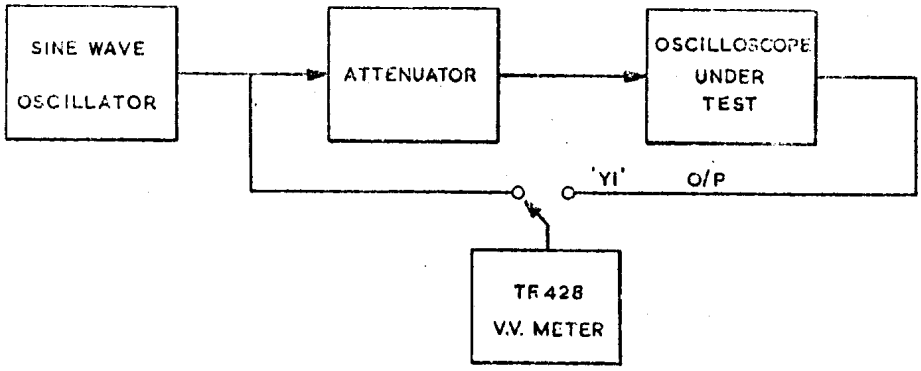

Connect the instrument under test into the circuit shown above so that the valve voltmeter (TF428) monitors either the input to the attenuator, or the signal to the Y1 (paraphase) plate. Set the oscillator to deliver 5V R.M.S. at 10 Kc/s. On the 'Y' sensitivity settings listed below, adjust the attenuator until the input and output readings are the same. The attenuator setting then gives the amplifier gain.

'Y' Sensitivity :	1V F.S.	3V F.S.	10V F.S.	30V F.S.
Attenuator :	27.7 - 32.1db	21.2 - 24.1db	12.2 - 14.2db	3.1 - 4.8db

Select the 100V range and then the 500V range, in each case with the attenuator set to zero. Adjust the oscillator to give an output of 0.5V at the Y1 plate, and then switch to the '30V F.S.' range and adjust the attenuator reading to return the output to 0.5V at the Y1 plate. The attenuator readings should be:-

'Y' Sensitivity :	100V F.S.	500V F.S.
Attenuator :	10.2 - 10.8 db	24.1 - 24.8 db

Bandwidth.

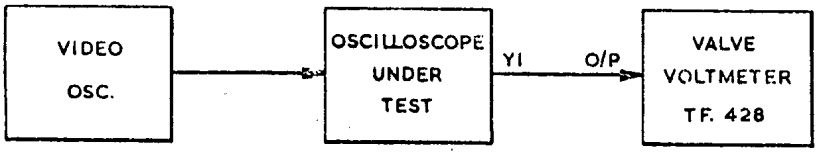

Connect the instrument under test into the circuit shown above, and set the oscillator to deliver 10 Kc/s at an amplitude which gives a Y1 output reading of 1 volt. Increase the signal input by 3db and the oscillator frequency until the Y1 output is again 1 volt. The bandwidths obtained should be as follows:-

'Y' Sensitivity :	1V F.S.	3V F.S.	10V F.S.	30V F.S.
Bandwidth :	750Kc/s	1.5Mc/s	3Mc/s	5Mc/s

www.TheValvePage.Com

Minimum Time Base Delay.

Connect a 10 μsec pulse of approximately 10 Kc/s PRF to the trigger and 'Y' input sockets. Use the calibrator to set the sweep time to 10 μsec for the width of the graticule. Switch the trigger delay 'off' and observe that the trailing edge of the pulse is visible on the right-hand side of the tube. Set the trigger delay (SW2) to '100 μsec' and the fine delay (RV1) fully anti-clockwise. The time displacement of the trailing edge of the pulse should not exceed 7 μsec.

Use the same technique with longer pulses and slower PRFs to check that the minimum delay is less than 70 μsec on the 1 m.sec range, and 700 μsec on the 10 m.sec range.

Maximum Time-Base Delay.

Trigger the time-base from the test oscillator, set to deliver about 10V of signal at 10 Kc/s. Set the delay (SW2) to 'off' and adjust the time-base to display one cycle of the trigger waveform. Adjust the 'X' shift (RV3) so that the trailing edge of the trace crosses the horizontal graticule line at a convenient intersection with a vertical marking.

Set the 'fine delay' (RV1) to minimum, and the 'delay' (SW2) to 100 μsec. Rotate the fine delay (RV1) clockwise and note that the waveform moves to the left, across the screen. When RV1 is fully clockwise the trace will have moved approximately one cycle. Adjust the oscillator frequency until there is no apparent displacement when the 'delay' (SW2) is switched from 'off' to 100 μsec. The period of one cycle is now equal to the delay and should lay within the limits 96 μsec - 144 μsec (10.4 Kc/s - 6.95 Kc/s).

Repeat the test on the 1 m.sec range and 10.m.sec range , starting with initial frequencies of 1 Kc/s and 100 c/s respectively. The delay period and frequency should lay within the following limits:-

1 m.sec	0.85 m.sec - 1.55 m.sec	(645 c/s - 1.175 Kc/s)
10 m.sec	8.5 m.sec - 15.5 m.sec	(64.5 c/s - 118 Kc/s)

Marker Synchronisation (CD518 only).

Connect a 5 μsec pulse at 1 Kc/s PRF to the 'Y' and trigger inputs. Adjust the time-base controls for a 15 μsec sweep. Set the delay (SW2) to 100 μsec, with the 'fine' delay (RV1) fully anti-clockwise, and select the 1 μsec time markers (SW6). Turn the 'fine'delay slowly clockwise and note that the marker pulses move smoothly past a fixed point and can be counted. Use the variable voltage transformer to vary the supply voltage ±8% about nominal, and check that the markers remain locked to the trace.

Triggering Check (CD568 and CD518 only).

Set the 'coarse' velocity control (SW3) to position 2 and connect a 10 Kc/s sine-wave into the 'Y' and trigger inputs. Check that the time-base remains properly synchronised as RV2 is varied, to display from 10 to 50 cycles of the input waveform.

Jitter.

Set the pulse generator to deliver a pulse at a PRF of 1.2 Kc/s and connect this pulse to the 'Y' and trigger inputs. Use the calibrator to adjust the time-base velocity for a 5 μsec sweep across the graticule. Set the 'coarse' delay to 1 m.sec, and the 'fine' delay (RV1) to minimum.

Use the 'fine' control (RV1) to increase the trigger delay until the leading edge of the pulse appears at the end of the time-base. The delay now equals one cycle of the trigger input. Observe the leading edge of the pulse, and check that the jitter on it is less than 0.83 μsec.

www.TheValvePage.Com

Time-Base Velocity

Set the controls of the oscilloscope as follows:-

Time-base 'coarse'	(SW3)	To position '1'
Time-base 'fine'	(RV2)	To minimum velocity (fully anti-clockwise)
Polarity selector	(SW1)	To 'A. C.'
Time-base delay	(SW2)	to 'OFF'

Connect the test oscillator to the 'Y' and trigger inputs, and note that between 1 and 3 cycles of the input waveform are displayed. (Sweep time 50 m sec - 150 m sec).

Set the time-base 'fine' velocity fully clockwise and adjust the input frequency so that one cycle of the input waveform is displayed. * Set RV2 fully anti-clockwise and switch SW3 to position 2. More than one cycle should be displayed. Turn RV2 fully clockwise and re-adjust the input frequency to display one cycle. Repeat from * with SW3 set to range 3 and range 4.

With SW3 on range 4, turn RV2 fully-clockwise and adjust the input frequency to 10 Kc/s. Set the calibrator SW6 to '1 Mc/s', and count the number of cycles of calibrating waveform laying between the limits of the graticule.

Turn SW3 to range 5 and set RV2 fully anti-clockwise. The time-base should display more cycles of calibrating waveform than before.

Turn RV2 clockwise until the second half-cycle of the calibrating waveform occupies 1" of trace, corresponding to a velocity of 2" per μsec.

Signal Delay.

Connect a 100 Kc/s square-wave to the 'Y' and trigger inputs and, with the trigger delay 'Off', adjust the time base controls to display one positive half-cycle. Switch the signal delay (SW7) to 'delay' and observe that the whole of the leading edge of the waveform is visible on the screen.

Connect a fast rising pulse of 20V peak amplitude at 10 Kc/s PRF to the trigger and 'Y' inputs. Set the gain (SW8) to '30V F. S.', and the delay (SW7) to 'A. C.' With no trigger delay, set the time-base velocity for a sweep time of 1 μsec. Turn the signal delay (SW7) to 'delay' and observe that the whole of the leading edge of the pulse is visible. Note that the signal amplitude has fallen to between 0.4 and 0.6 of its original value. The amplitude of breakthrough of undelayed pulse must be less than 10% of the delayed amplitude.

Spot Size and Brilliance.

Connect a 10 Kc/s signal to the 'Y' and trigger inputs and adjust the time base controls to display 6 cycles across the 2" graticule. Increase the input frequency to 250 Kc/s and adjust the brilliance and focus controls so that the picture is clearly resolved.

www.TheValvePage.Com

Time-Base Trigger Sensitivity.

Connect the output of the square-wave generator to the 'Y' and trigger inputs, and set the frequency to '20 c/s'. Set the 'coarse' delay (SW2) to 'off' and the trigger polarity (SW1) to '+'. Adjust the time-base velocity to display one cycle of the input waveform. Reduce the input voltage to zero, and then increase it until the time-base triggers: the signal amplitude should be less than 1V peak-to-peak.

Repeat the above test with the input frequency, trigger polarity, and 'coarse' delay, set as tabulated. The 'fine' delay (RV1) should be set to minimum.

Trigger Frequency	Polarity (SW1)	Delay (SW2)	Trigger Amplitude
20 c/s	'+'	'Off'	1V
	'-'	'Off'	1V
	'+'	100μS	2V
	'-'	100μS	2V
10 Kc/s	'+'	'Off'	1V
	'-'	'Off'	1V
	'+'	100μS	2V
	'-'	100μS	2V

With conditions as in the first line of the preceding table, adjust the focus and brilliance for a fine trace. Measure the trace length, which should be between 2" and 2.75".

Time-Base Trigger Sensitivity (Sine-Wave).

With no input signals, set the polarity selector (SW1) to 'A.C.' and the 'coarse' delay (SW2) of 'off'. The time-base should free run at approximately 20 c/s.

Adjust the time-base velocity to give a sweep time of 1 m.sec across the graticule, using the calibrator. Connect a 1 Kc/s signal to the 'Y' and trigger inputs. Set the oscillator amplitude to zero and slowly increase it until the trace triggers, clearly displaying one cycle of the trigger waveform. The signal amplitude should be less than 15V peak-to-peak.

www.TheValvePage.Com

FAULT LOCATION CHART

SYMPTOM	POSSIBLE CAUSE	REMEDY
Complete failure.	Fuse open circuit. T3 primary winding open circuit.	Change the fuse. Check the continuity of T3. Check the wiring from the mains input socket to T3.
No spot or trace on the Cathode Ray Tube with the valve heaters lit.	No negative high tension.	Check the negative voltage rail (--105 volts).
	No extra high tension from V28.	Check the extra high tension from V28 to the cathode ray tube.
	Fault in the " Y " system V21, V22, V23, V24, V25.	Measure the D.C. voltage at Pin 2 of V22 and V25. These should balance at approximately 135 volts to centralise the trace. If this condition is not correct there is a fault in the " Y " amplifier circuit. Switch to " Y " delay. If the trace returns to the screen the fault is in V21 or its circuitry. Operate the " Y " shift control. If the trace is just apparent at the top of the screen then the V24 circuit is faulty. If the trace appears at the bottom of the screen then V25 circuit is faulty. If the " Y " shift control is inoperative the V22 or V23 circuit is faulty. Change the valves or other components which are faulty.
	Fault in the " X " system V13, V14.	Monitor the sweep waveform at Pin 2 of V14. If there is no sweep waveform the fault is in V13, V14 circuit. Change the valves or other faulty components.
No time base under any operating conditions.	No trigger V2, V5, T1, V7, V10, V13, V14. C27 short circuit.	If there is no spot on the screen with the brilliance control turned to maximum the fault is probably in V13 V14 circuit as foregone. If the spot is visible on the left of the screen, switch to AC trigger and monitor the output from V2 on pin 1 of V5. Refer to the circuit diagram in the handbook for correct waveshape. If the input waveform to V5 is correct, monitor the input waveform on V10 pin 7. If this is correct, measure the voltage at pin 1 of V10. If this is high then V10 circuit is faulty. Check C27 for short circuit.
No signal at pin 1 of V5.	V2 or circuitry.	Change V2. Check the circuit potentials and components. Change faulty components.
No signal at V10 grid pin 7.	V5; V7; T1, or circuitry.	Change V5; V7. Check the continuity of T1 windings. Check the suppressor cut-off on V5.
Short time base on the left hand side of the screen.	V16 or circuitry.	Change V16. Check the circuitry. Change the faulty component.
No time base on all delay switch positions.	R24 open circuit. C8 short circuit. V1, V3; T1, or circuitry.	Check the circuit voltages. Change the valves. Change any other faulty component.
No time base on any one delay switch position.	C6, C10, C7. SW2/A; SW2/B.	Check the relevant capacitor for the faulty range. Check the switch contacts and wiring on the faulty range switch position.
No " Y " presentation on the screen with vertical shift normal and the trace centred.	SW4; switched to external position. " Y " input attenuator switching C59 short circuit.	Turn switch 4 to Internal position. (SW4 is located at the rear of the unit.) Check the " Y " input attenuator and switching. Check C59 for short circuit.
No " Y " presentation on delay position.	Delay open circuit. R86 open circuit. C50 open circuit. SW7/B; SW7/c.	Measure the continuity of the delay line. Check R86 and C50. Check the switch contacts and wiring.

www.TheValvePage.Com

SYMPTOM	POSSIBLE CAUSE	REMEDY
"Y" sensitivity high on any one range or poor response to square wave signal.	C44; 45; 51; 54; 56; 52 either short circuit or wrongly adjusted.	Check the relevant capacitor for the faulty range and change if necessary. Re-adjust capacitors for best square wave response at 10 Kc/s. For poor square wave response on all ranges first adjust C57 and C59 on the 30-volt range.
No "Y" presentation or reduced amplitude on any one sensitivity range.	SW8/A.C.E. or F. R70; 73; 91; 75 on 500-volt range. R72; 75; 91 on 100-volt range. R69; 91 on 30-volt range. R69; 92 on 10-volt range. R69; 93 on 3-volt range. R69; 94 on 1-volt range.	If unit is faulty on 30 volts; 100 volts and 500-volt ranges, check R91. If unit is faulty on 30 volt; 10-volt; 3-volt and 1-volt ranges, check R69. If unit is faulty on only one range, check the relevant resistors for the faulty range from the list in the "possible cause" column.
No calibration at any position of SW6. *CD568 only.*	V20; V6 or circuitry.	Change valve V20. Change crystal V6. Check the circuit voltages. Change faulty components.
No calibration on any one range. *CD568 only.*	Relevant capacitor or coil for the faulty range.	Check the relevant capacitor and coil. Change if necessary.
No calibration. *CD 518 only.*	V31; V32 or circuitry.	Change the valves. Check the circuit voltages and triggering waveforms. Change any other faulty component.
Uncontroilable excessive brilliance.	V18; V19.	Change valves.

TYPICAL D.C. VOLTAGES AT VALVE ELECTRODES

These D.C. voltages are provided for guidance only during fault finding and should not be taken as mandatory requirements. All measurements were taken with a Model 8 Avometer and with the oscilloscope in the following condition:—

Time Base Coarse	...	Switched to Position 1.
Trigger... ...	...	Switched to A.C.
"Y" Input ...	...	Switched to A.C.
Sensitivity ...	...	30 Volts.
Calibration Switch	...	OFF.
Trigger Delay	...	OFF.

Valve	Pin No.	Voltage	Meter Range	Remarks
V1	1	−84	100	Variable with fine delay.
"	2	−83	100	
"	7	+5	25	
"	6	−110	250	−95 with delay IN.
"	5	+115	250	
V2	2	Virtual earth	—	

www.TheValvePage.Com

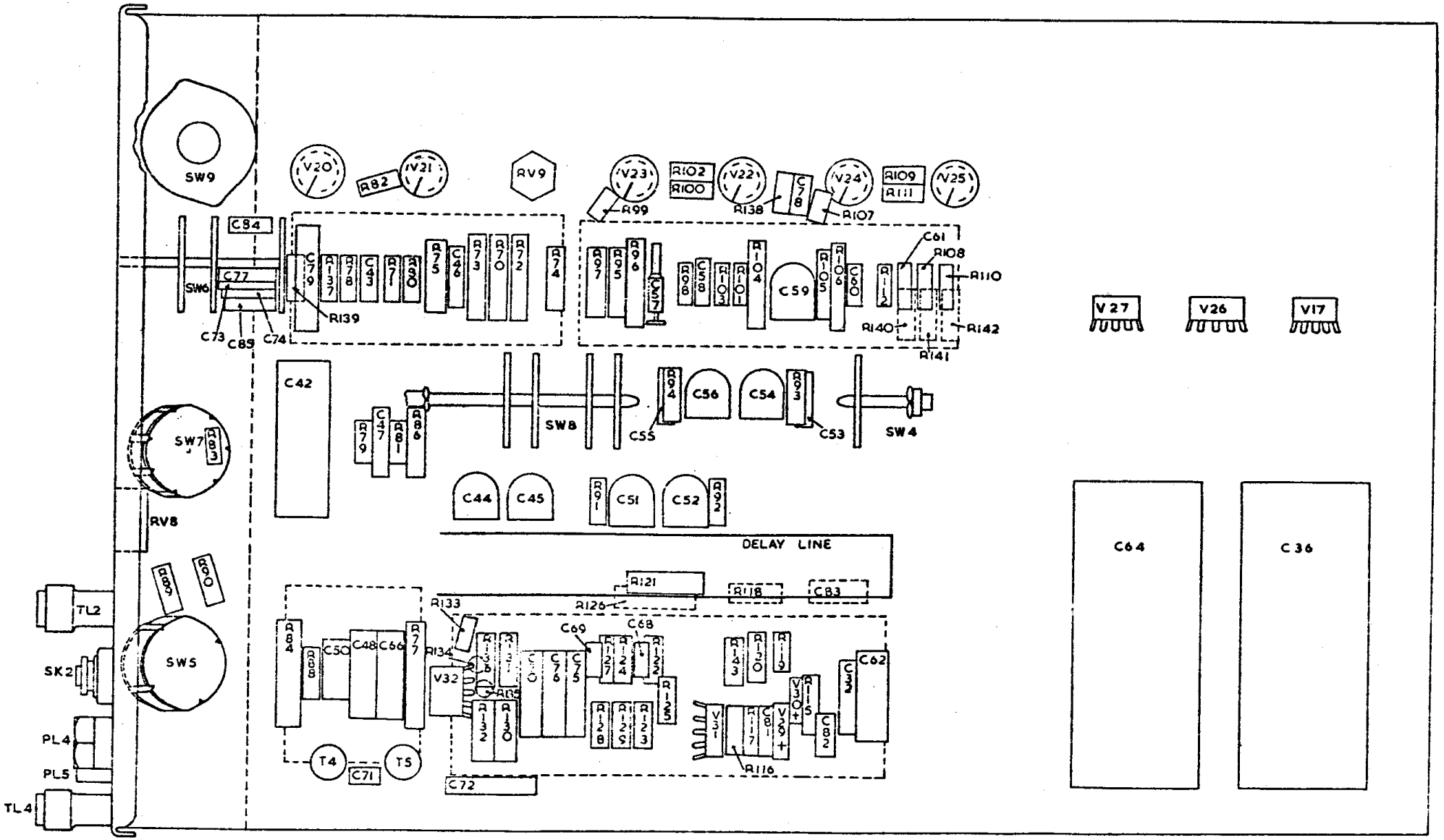

Fig. 12. Right hand side view. Component location.

www.TheValvePage.Com

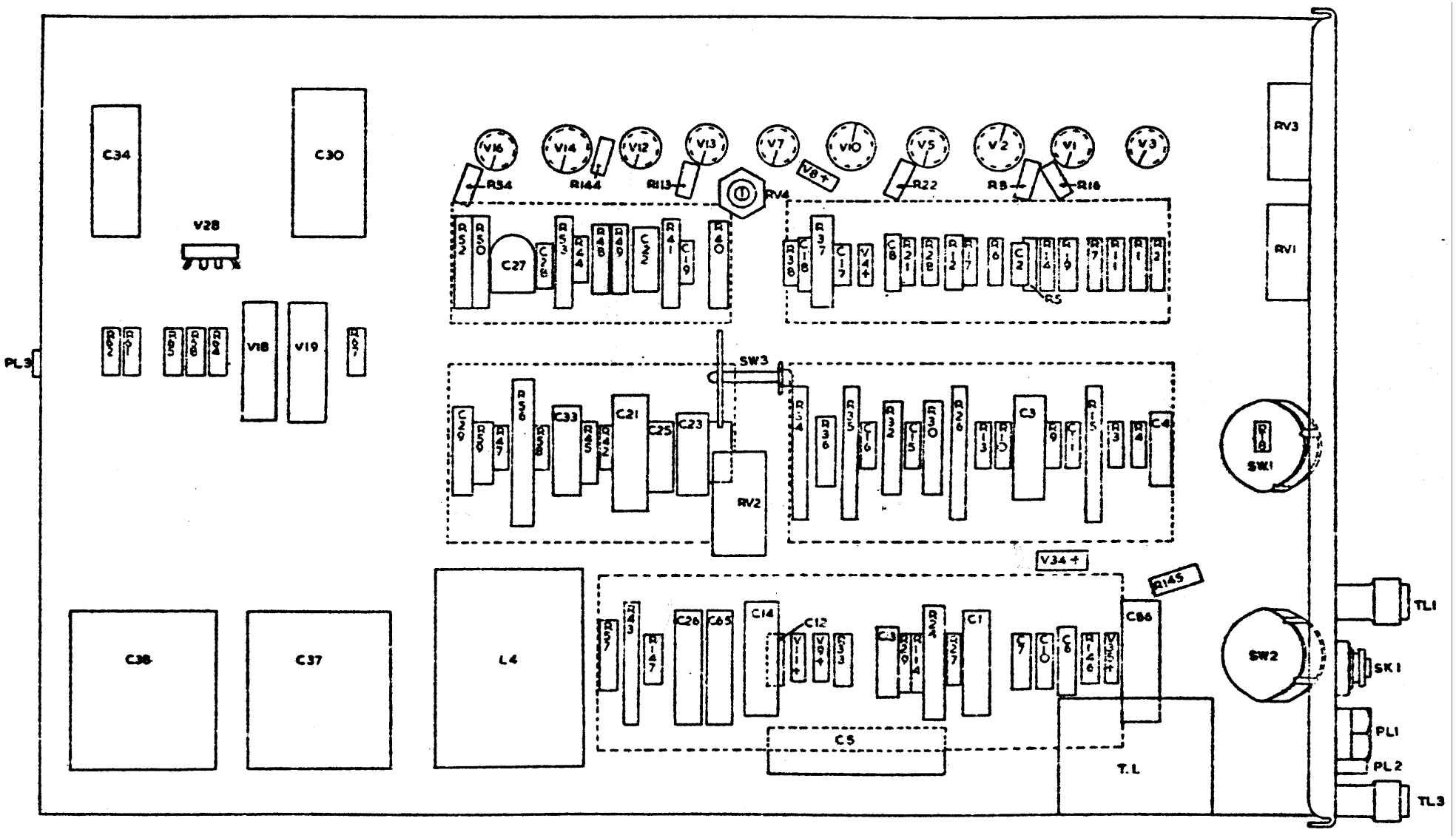

www.TheValvePage.Com

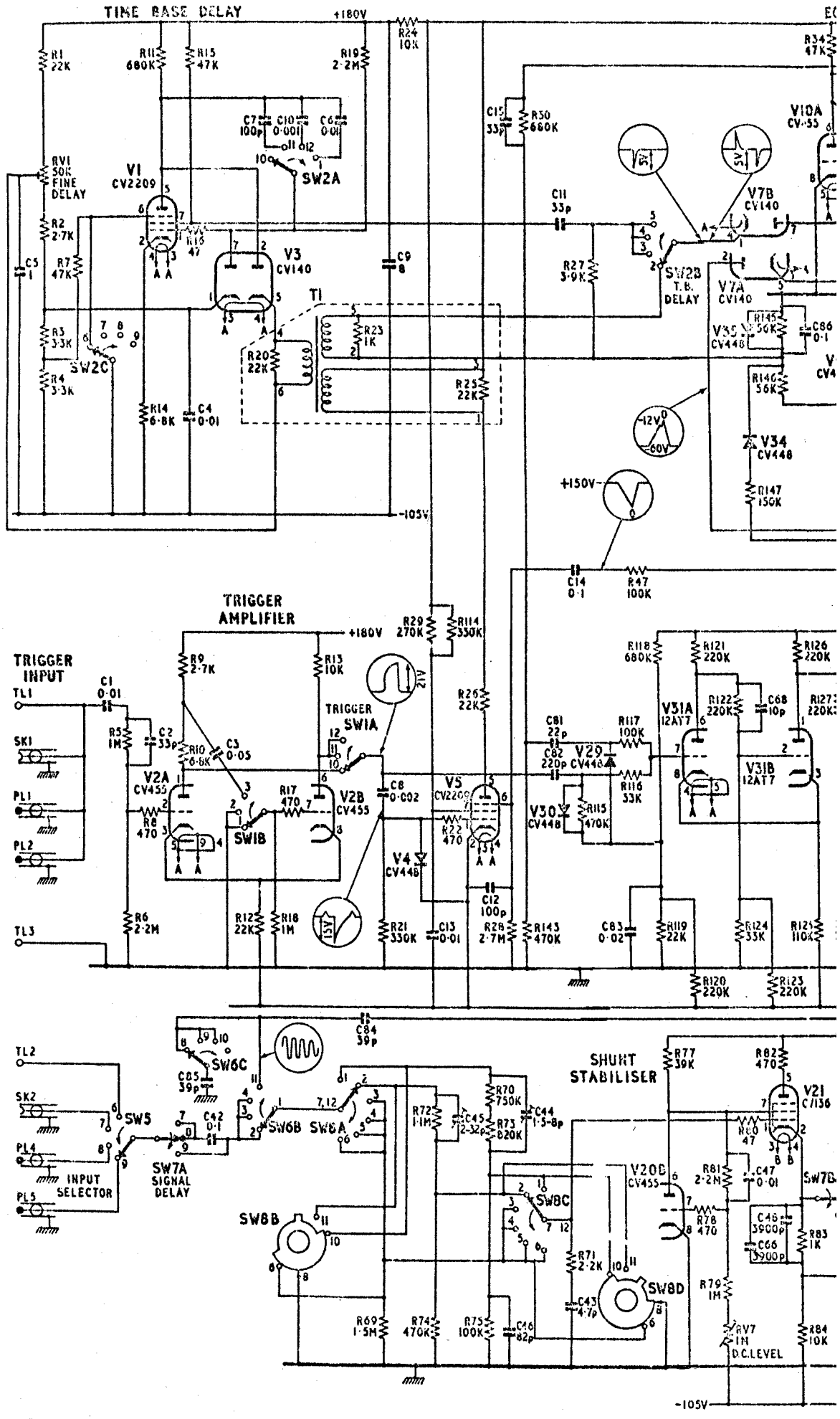
TIME BASE DELAY
+180V
-105V
R1 22K
R11 680K
R15 47K
R19 2·2M
R24 10K
R34 47K
C7 100p
C10 0·001
C6 0·01
SW2A
RV1 50K FINE DELAY
V1 CV2209
R2 2·7K
R15 47
V3 CV140
C9 8
C5 1
R7 47K
T1
R3 3·3K
SW2C
R4 3·3K
R20 22K
R23 1K
R25 22K
R14 6·8K
C4 0·01
C15 33p
R30 660K
V10A CV-55
C11 33p
V7B CV140
R27 3·9K
SW2B T.B. DELAY
V7A CV140
V35 CV448
R145 56K
C86 0·1
R146 56K
-12V
-60V
V34 CV448
+150V
R147 150K
C14 0·1
R47 100K
TRIGGER AMPLIFIER
+180V
R29 270K
R114 330K
TRIGGER INPUT
TL1
C1 0·01
SK1
PL1
PL2
R9 2·7K
R13 10K
21V
TRIGGER SW1A
R26 22K
R118 680K
R121 220K
R126 220K
R5 1M
C2 33p
R10 6·8K
C3 0·05
V2A CV455
R17 470
V2B CV455
C8 0·002
V5 CV2209
R22 470
C81 22p
R117 100K
V31A 12AT7
R122 220K
C68 10p
C82 220p
V29 CV448
R116 33K
V31B 12AT7
V30 CV448
R115 470K
SW1B
V4 CV448
C12 100p
R6 2·2M
TL3
R12 22K
R18 1M
R21 330K
C13 0·01
R28 2·7M
R143 470K
C83 0·02
R119 22K
R124 33K
R120 220K
R123 220K
C84 39p
TL2
SW6C
C85 39p
SK2
SW5
SW6B
SW6A
R72 1·1M
C45 2·2-32p
R70 750K
R73 820K
C44 1·5-8p
PL4
PL5
INPUT SELECTOR
SW7A SIGNAL DELAY
C42 0·1
SHUNT STABILISER
R77 39K
R82 470
V21 C/136
R80 47
V20B CV455
SW8C
R81 2·2M
C47 0·01
SW7B
R78 470
C46 3900p
C66 3900p
R83 1K
SW8B
R71 2·2K
SW8D
R79 1M
C43 4·7p
R69 1·5M
R74 470K
R75 100K
C46 82p
RV7 1M D.C.LEVEL
R84 10K
-105V

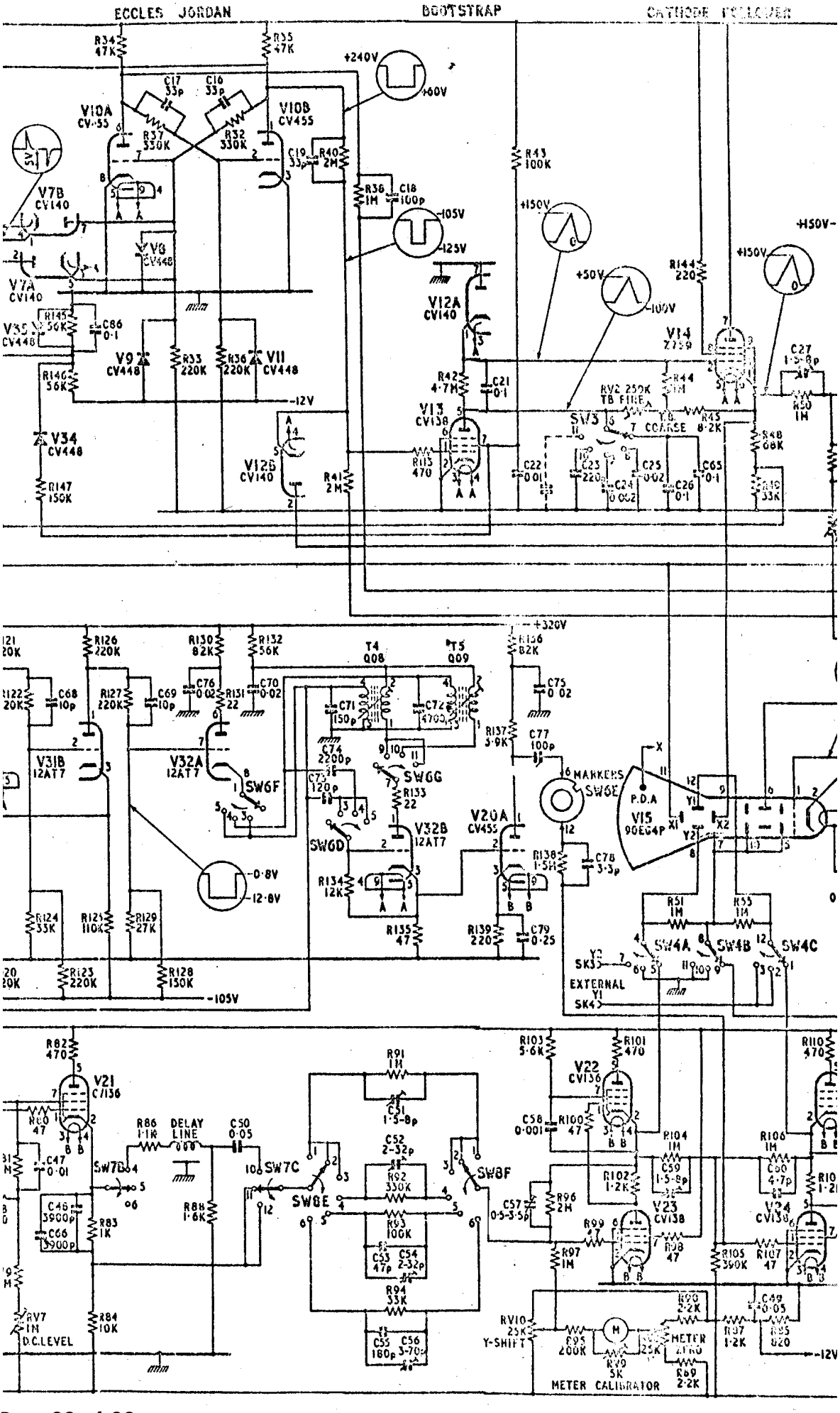
ECCLES JORDAN
BOOTSTRAP
CATHODE FOLLOWER
+240V
+60V
-105V
-125V
+150V
+50V
-100V
+150V
-12V
+320V
-0·8V
-12·8V
-105V
MARKERS
P.D.A
EXTERNAL
DELAY LINE
D.C.LEVEL
Y-SHIFT
METER CALIBRATOR
METER ZERO
RV2 250K TB FINE
Y.B. COARSE
SW3
SW4A
SW4B
SW4C
SW6E
SW6F
SW6G
SW6D
SW7B
SW7C
SW8E
SW8F
V10A CV455
V10B CV455
V7B CV140
V7A CV140
V8 CV448
V9 CV448
V11 CV448
V12A CV140
V12B CV140
V13 CV138
V14 Z759
V15 90EG4P
V20A CV455
V21 CV136
V22 CV136
V23 CV138
V24 CV138
V31B 12AT7
V32A 12AT7
V32B 12AT7
T4 Q08
T5 Q09
RV7 1M
RV10 25K
RV9 5K
R34 47K
R35 47K
R37 330K
R32 330K
R40 2M
R36 1M
R43 100K
R144 220
R42 4·7M
R41 2M
R113 470
R126 220K
R130 82K
R132 56K
R136 82K
R137 3·9K
R138 1·5M
R134 12K
R135 47
R139 220
R124 33K
R123 220K
R128 150K
R82 470
R86 1·1K
R88 1·6K
R83 1K
R84 10K
R91 1M
R92 330K
R93 100K
R94 33K
R103 5·6K
R101 470
R100 47
R104 1M
R102 1·2K
R96 2M
R99 47
R98 47
R97 1M
R105 390K
R107 47
R106 1M
R110 470
R95 200K
R90 2·2K
R89 2·2K
R87 1·2K
R85 820
R50 1M
R48 68K
R49 33K
R45 8·2K
R44 1M
R51 1M
R55 1M
C17 33p
C16 33p
C19 33p
C18 100p
C21 0·1
C22 0·01
C23 220p
C24 0·002
C25 0·02
C26 0·1
C65 0·1
C27 1·5-8p
C68 10p
C69 10p
C76 0·02
C70 0·02
C71 150p
C72 4700
C74 2200p
C75 0·02
C77 100p
C78 3·3p
C79 0·25
C51 1·5-8p
C52 2-32p
C53 47p
C54 2-32p
C55 180p
C56 3-70p
C57 0·5-3·5p
C58 0·001
C59 1·5-8p
C60 4·7p
C47 0·01
C48 3900p
C66 3900p
C49 0·05

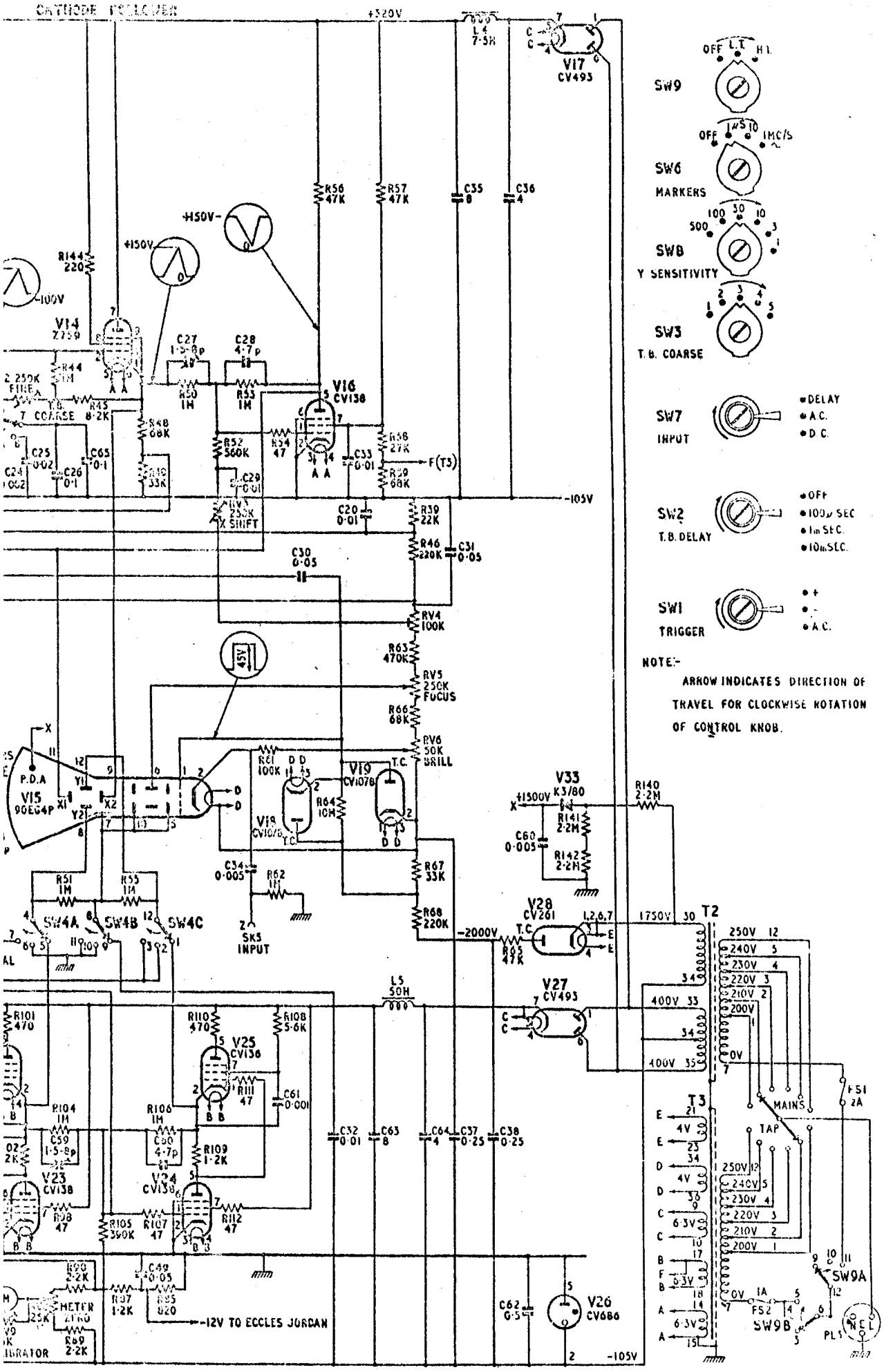

Fig. 9. Complete Circuit Diagram. CD518.

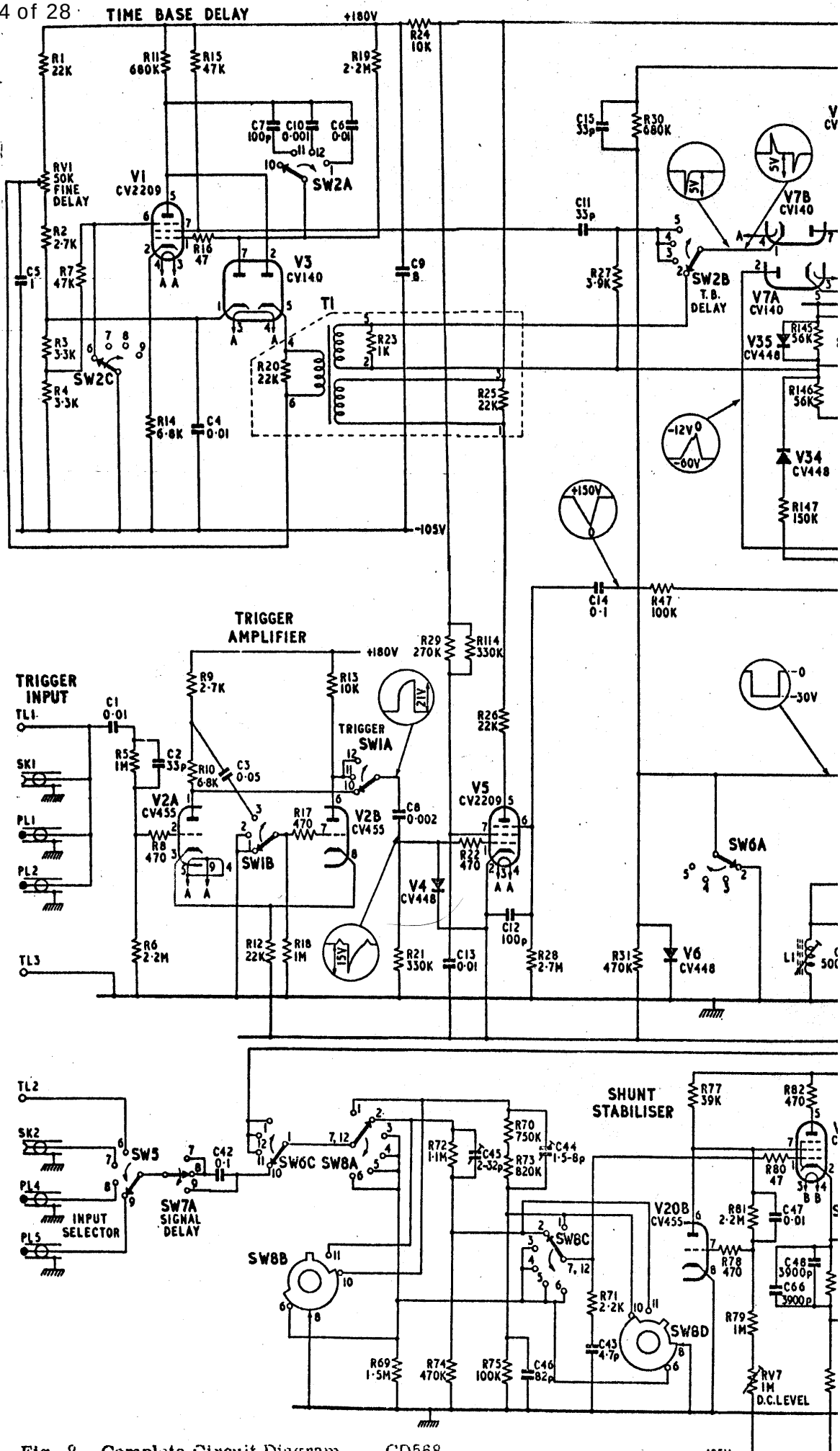

Fig. 8. Complete Circuit Diagram. CD568.

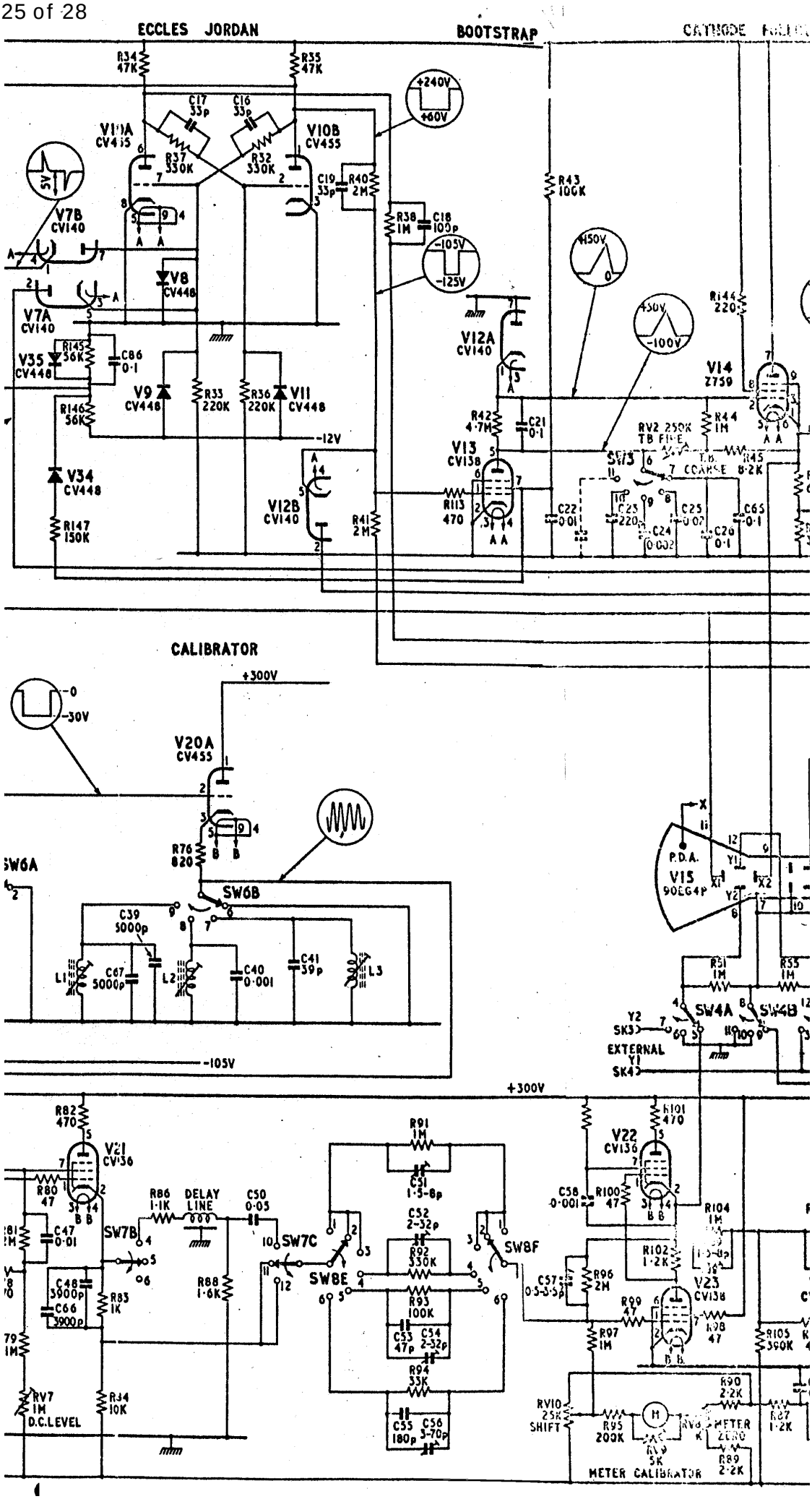
ECCLES JORDAN
BOOTSTRAP
CATHODE FOLLOW
CALIBRATOR
+300V
-105V
+300V
EXTERNAL
D.C.LEVEL
METER CALIBRATOR
DELAY LINE
P.D.A.
SHIFT
METER ZERO

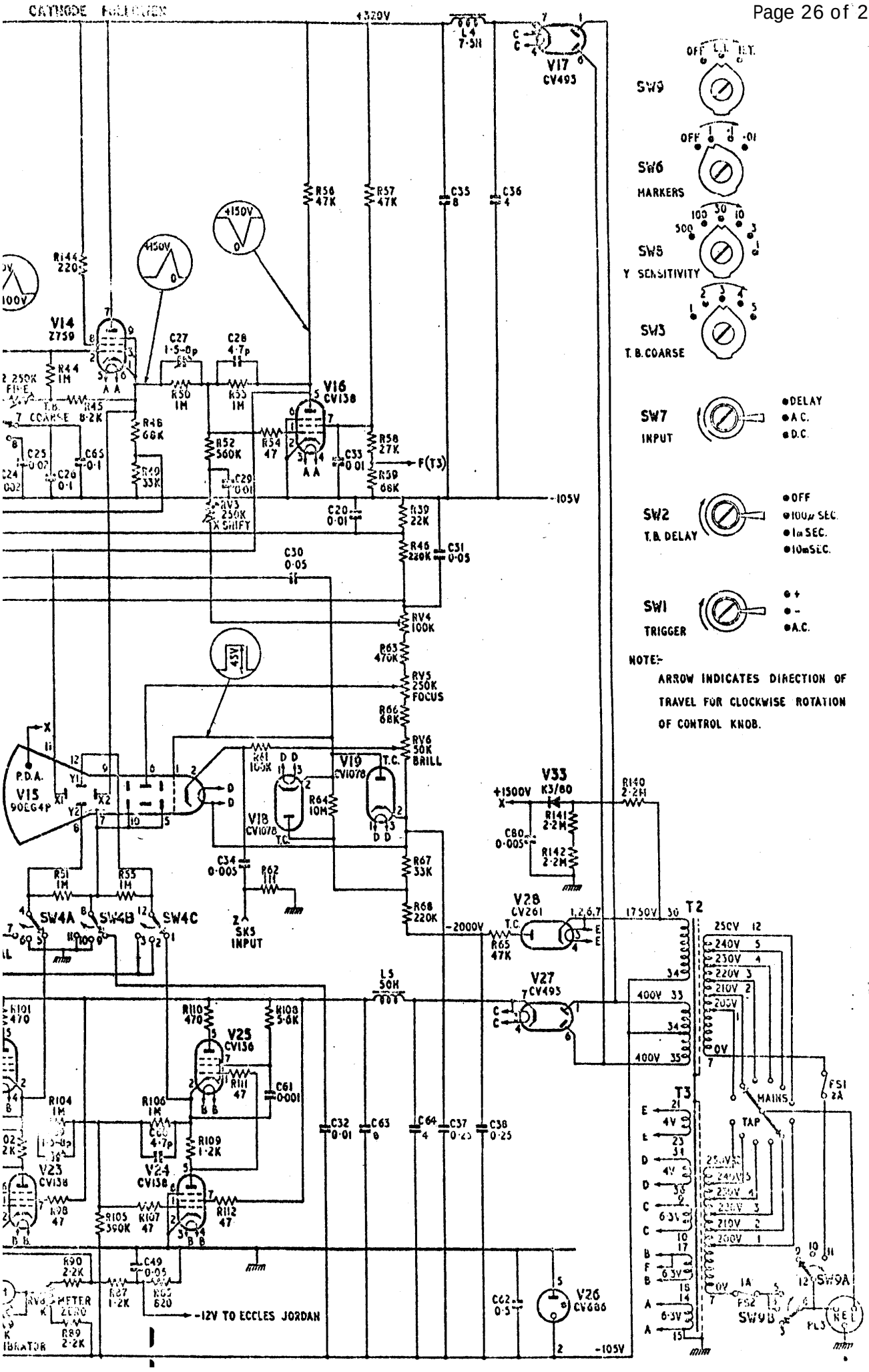
CATHODE FOLLOWER
+320V
V17
CV493
L4
7·5H
SW9
OFF
L.T.
H.T.
SW6
MARKERS
OFF
·01
SW5
Y SENSITIVITY
100
50
10
500
SW3
T.B. COARSE
SW7
INPUT
DELAY
A.C.
D.C.
SW2
T.B. DELAY
OFF
100μ SEC.
1m SEC.
10m SEC.
SW1
TRIGGER
+
-
A.C.
NOTE:-
ARROW INDICATES DIRECTION OF TRAVEL FOR CLOCKWISE ROTATION OF CONTROL KNOB.
R56
47K
R57
47K
C35
8
C36
4
+150V
R144
220
V14
Z759
C27
1·5-8p
C28
4·7p
R44
1M
R50
1M
R53
1M
V16
CV138
R45
8·2K
R48
68K
R52
560K
R54
47
R58
27K
F(T3)
C33
0·01
R59
68K
C25
0·02
C65
0·1
C24
C26
0·1
R49
33K
C29
0·01
RV3
250K
X SHIFT
-105V
C20
0·01
R39
22K
R46
220K
C31
0·05
C30
0·05
RV4
100K
R63
470K
RV5
250K
FOCUS
R66
68K
RV6
50K
BRILL
45V
P.D.A.
V15
90EG4P
R61
100K
V19
CV1078
V18
CV1078
R64
10M
C34
0·005
R62
1M
SK5
INPUT
R67
33K
R68
220K
V33
K3/80
+1500V
R140
2·2M
R141
2·2M
C80
0·005
R142
2·2M
V28
CV261
-2000V
R65
47K
1750V
T2
250V
240V
230V
220V
210V
200V
0V
400V
400V
V27
CV493
L5
50H
R51
1M
R55
1M
SW4A
SW4B
SW4C
R101
470
R110
470
R108
5·6K
V25
CV136
R111
47
C61
0·001
R104
1M
R106
1M
C60
4·7p
R109
1·2K
V23
CV138
V24
CV138
R98
47
R105
390K
R107
47
R112
47
C32
0·01
C63
8
C64
4
C37
0·25
C38
0·25
T3
4V
6·3V
MAINS
TAP
FS1
2A
R90
2·2K
C49
0·05
R87
1·2K
R85
820
METER
ZERO
R89
2·2K
-12V TO ECCLES JORDAN
C62
0·5
V26
CV686
-105V
SW9A
SW9B
FS2
PL3
NEL

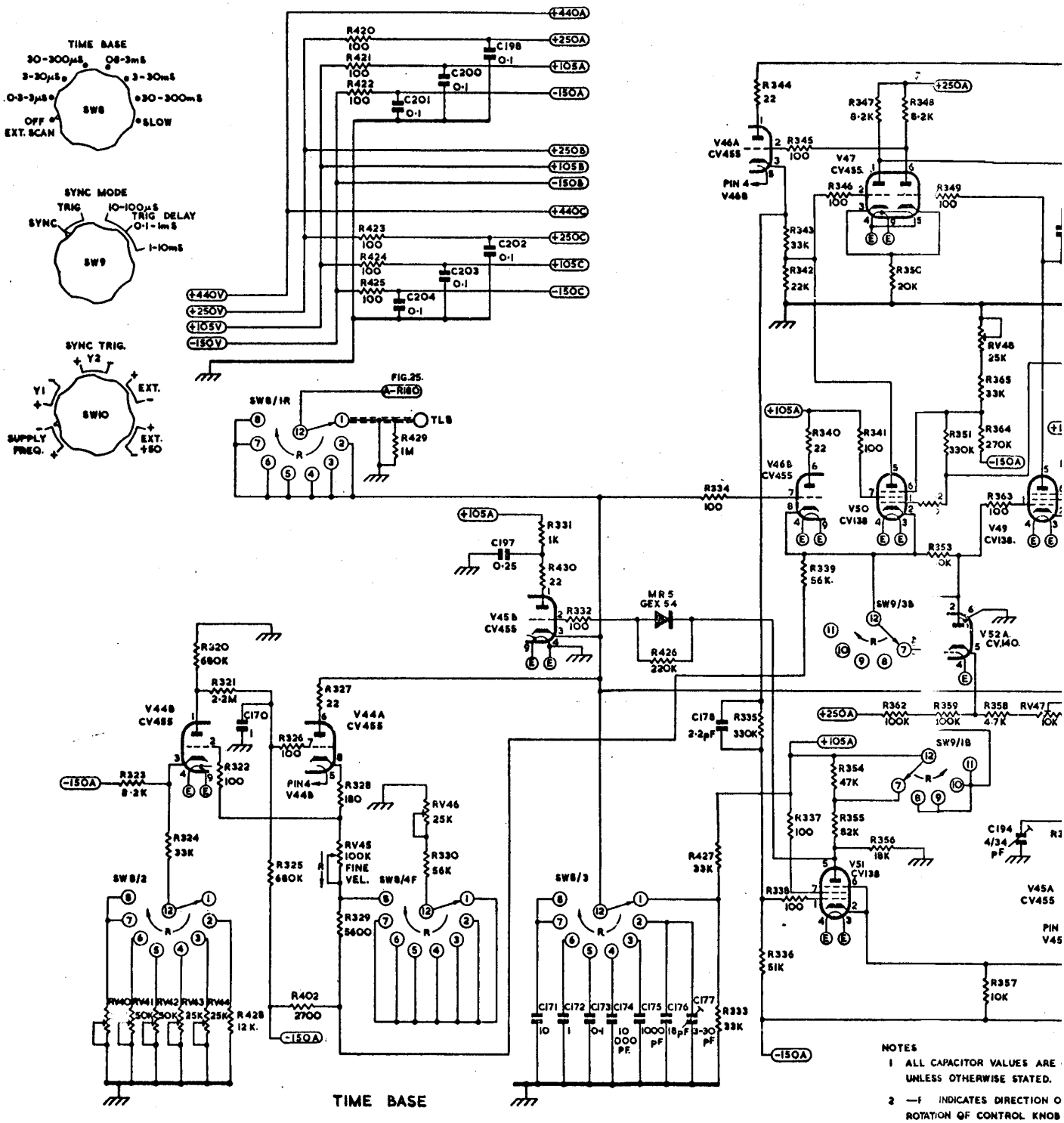

Fig. 24. Time base & Sync Amplifier Circuit Diagram

www.TheValvePage.Com

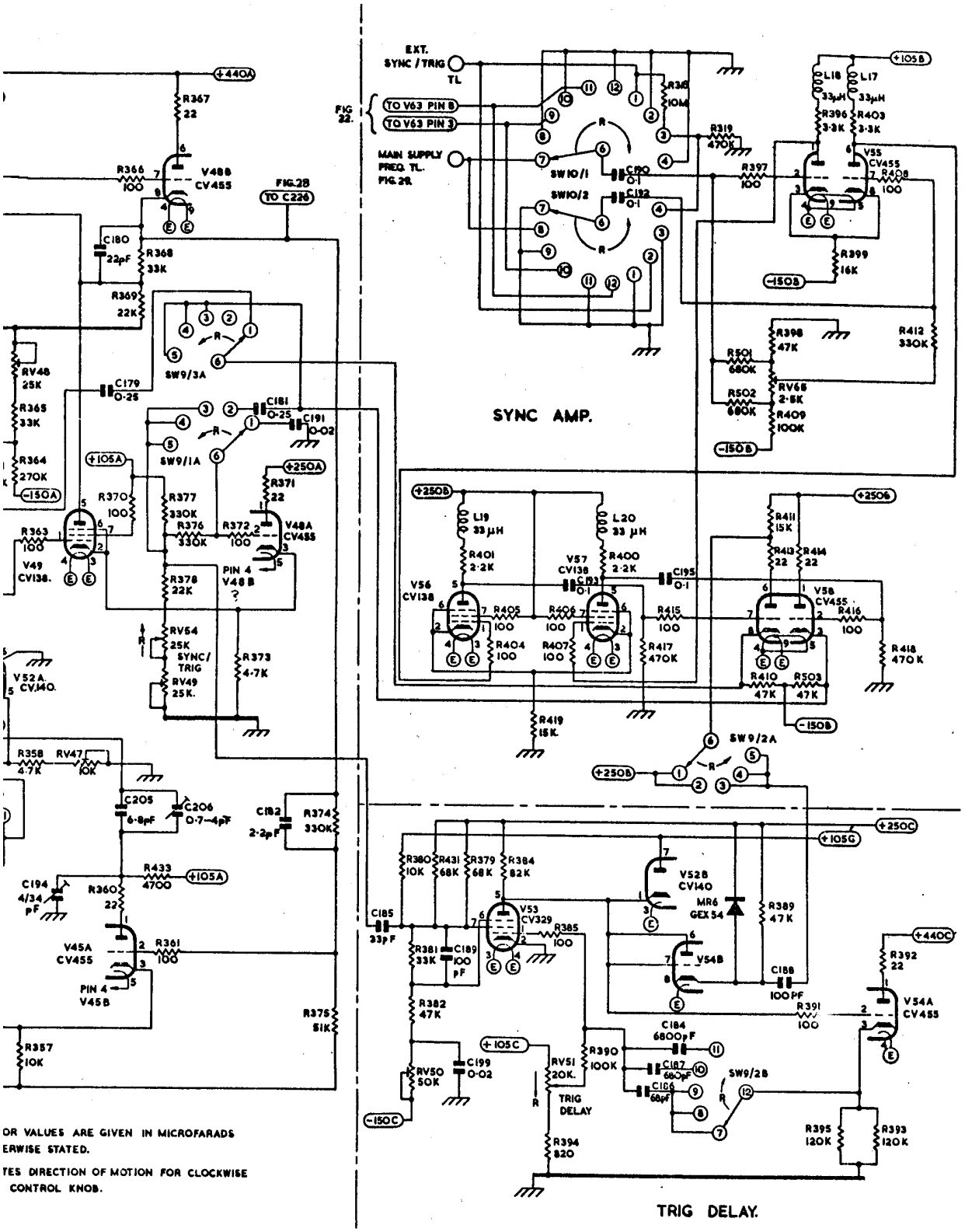

www.TheValvePage.Com