StorageWorks™ Array Controllers

HS Family of Array Controllers User's Guide

Order Number: EK–HSFAM–UG. D01

The *StorageWorks Array Controllers HS Family of Array Controllers User's Guide* contains instructions for installing and using HSJ30, HSJ40, HSD30, HSZ40–A*x,* and HSZ40–B*x* array controllers.

Digital Equipment Corporation
Maynard, Massachusetts

March 1995

The information in this document is subject to change without notice and should not be construed as a commitment by Digital Equipment Corporation. Digital Equipment Corporation assumes no responsibility for any errors that may appear in this document.

The software described in this document is furnished under a license and may be used or copied only in accordance with the terms of such license.

No responsibility is assumed for the use or reliability of software on equipment that is not supplied by Digital Equipment Corporation or its affiliated companies.

Restricted Rights: Use, duplication, or disclosure by the U.S. Government is subject to restrictions as set forth in subparagraph (c) (1) (ii) of the Rights in Technical Data and Computer Software clause at DFARS 252.227-7013.

© Digital Equipment Corporation 1995
Printed in U.S.A.
All Rights Reserved.

NOTE: This equipment generates, uses, and may emit radio frequency energy. The equipment has been type tested and found to comply with the limits for a Class A digital device pursuant to Part 15 of the FCC rules. These limits are designed to provide reasonable protection against harmful interference in a residential installation.

Any changes or modifications made to this equipment may void the user's authority to operate the equipment.

Operation of this equipment in a residential area may cause interference in which case the user at his own expense will be required to take whatever measures will be required to take whatever measures may be required to correct the interference.

Alpha, AlphaServer, CI, DEC, DECconnect, DECevent, DEC OSF/1, HSC, HSD30, HSJ, HSZ, MSCP, OpenVMS, OpenVMS AXP, StorageWorks, TMSCP, VAX, VAXcluster, VAXsimPLUS, VMS, VMScluster, and the DIGITAL logo are trademarks of Digital Equipment Corporation.

OSF and OSF/1 are registered trademarks of the Open Software Foundation, Inc.

All other trademarks and registered trademarks are the property of their respective holders.

This document was prepared using VAX DOCUMENT Version 2.1.

Contents

Preface xv

1 Introduction to HS Array Controllers

1.1 Overview of HS Array Controllers 1–1
1.2 Housing for HS Array Controllers 1–2
1.3 Physical Description of HS Array Controllers 1–2
1.3.1 HSJ30 and HSJ40 Array Controllers Physical Description 1–2
1.3.2 HSD30 Array Controller Physical Description 1–4
1.3.3 HSZ Array Controller Physical Description 1–6
1.4 Controller Host Interface Protocols 1–7
1.5 Addressing Storage Within the Subsystem 1–8
1.5.1 Controller Storage Addressing 1–8
1.5.2 Host Storage Addressing 1–10
1.5.3 Host Storage Addressing (HSZ Array Controllers) 1–11
1.6 HSJ Array Controller Dual Data Link 1–12
1.7 HS Array Controller Features 1–12
1.8 Controllers and Cache Modules Specifications 1–14
1.9 Ordering HS Array Controller Cache Modules 1–15
1.10 StorageWorks Controller Subsystem Products 1–16
1.10.1 Controller Shelf 1–17
1.10.2 BA350–SB SBB Shelf 1–18
1.11 MSCP and TMSCP Protocols (to Hosts) 1–19
1.12 SCSI Protocol (to Hosts) 1–19
1.13 SCSI Protocol (to Devices) 1–19

2 Controller Technical Description

2.1 HS Array Controller Hardware Functional Overview 2–1
2.1.1 Policy Processor Hardware 2–2
2.1.2 Bus Exchangers 2–2
2.1.3 CI, DSSI, or SCSI–2 Interfaces (Host Ports) 2–3
2.1.4 SCSI–2 Device Ports (Buses) 2–3
2.1.5 Read Cache Module 2–3
2.1.6 Write-Back Cache Module 2–3
2.1.6.1 Battery Discharging 2–4
2.1.6.2 Battery Charging 2–5
2.1.7 Operator Control Panel 2–6
2.1.7.1 HSJ40 and HSJ30 Array Controller OCP 2–6
2.1.7.2 HSD30 Array Controller OCP 2–7
2.1.7.3 HSZ Array Controller OCP 2–8
2.1.8 Program Card (PCMCIA) 2–9
2.1.9 Nonvolatile Memory (NVMEM) 2–10
2.1.10 Maintenance Terminal Port 2–10

2.1.11 Dual Controller Port 2–12
2.2 HS Array Controller Firmware Overview 2–12
2.2.1 Core Functions 2–13
2.2.1.1 Controller Self-Test and Diagnostics 2–13
2.2.1.2 Executive Functions 2–13
2.2.2 Host Interconnect Functions 2–13
2.2.3 Operator Interface and Subsystem Management Functions 2–14
2.2.3.1 Command Line Interpreter 2–14
2.2.3.2 Diagnostic Utility Protocol 2–14
2.2.3.3 HSZ Array Controller Virtual Terminal Connection 2–14
2.2.3.4 Local Programs 2–14
2.2.3.5 Error Logging and Fault Management 2–15
2.2.4 Device Services 2–15
2.2.5 Value-Added Functions 2–15
2.3 What Is Failover? 2–16
2.3.1 Setting Failover 2–17
2.3.2 Exiting Failover 2–18
2.3.3 Taking Controllers Out of Failover 2–18
2.3.4 Using Failover Commands When Write-Back Cache Is in Use 2–19
2.3.5 Resolving a Configuration Mismatch after a Hardware Mismatch 2–19
2.4 HSZ Array Controller Failover Operation 2–20
2.4.1 Transparent Controller Failover Resulting from a Fault 2–20
2.4.2 Transparent Controller Failover Resulting from Operator Action 2–22

3 Configuration Rules and Restrictions

3.1 Ordering Considerations 3–1
3.2 Cabinets 3–1
3.2.1 SW800-Series Data Center Cabinet 3–2
3.2.2 SW500-Series Cabinets 3–6
3.2.3 SW300-Series Deskside RAID Enclosure 3–8
3.2.4 Shelves 3–9
3.2.4.1 BA350-Series 3–10
3.2.4.2 SW300-Series Cabinet Shelf 3–11
3.3 Controllers 3–12
3.3.1 Nonredundant HS Array Controller Configurations 3–13
3.3.2 Dual-Redundant HS Array Controller Configurations 3–13
3.3.3 Optimal Performance Configurations 3–14
3.3.4 Optimal Availability Configurations 3–15
3.4 Typical and Recommended Configurations 3–17
3.4.1 3½-Inch SBB Restrictions 3–17
3.4.2 3½-Inch SBB Recommended Configurations 3–17
3.4.3 5¼-Inch SBB Restrictions 3–19
3.4.4 5¼-Inch SBB Recommended Configurations 3–20
3.4.5 Intermixing 5¼-Inch and 3½-Inch SBBs 3–21
3.4.6 Atypical Configurations 3–21
3.4.7 SW300-Series Cabinet Deskside RAID Configuration 3–22
3.5 Host Port Cable Lengths 3–24
3.6 CD–ROM Restrictions 3–25
3.7 Host Adapter Support 3–25
3.7.1 HSJ Array Controllers Host Adapter Support 3–25
3.7.2 HSD30 Array Controller Host Adapter Support 3–25
3.7.3 HSZ Array Controller Host Adapter Support 3–26

4 Installation

4.1 Customer Site Preparation 4–1
4.1.1 Power and Power Cord Requirements 4–2
4.1.2 Shelf Power Configuration Rules 4–2
4.1.3 Environmental Considerations 4–2
4.2 Before You Begin 4–3
4.2.1 Personnel Needed for Installation 4–3
4.2.2 Tools Needed for Installation 4–3
4.2.3 Electrostatic Discharge Protection Guidelines 4–4
4.3 Controller Components Handling Guidelines 4–4
4.3.1 Module Handling Guidelines 4–5
4.3.2 Program Card Handling Guidelines 4–5
4.3.3 Cabling Guidelines 4–6
4.3.3.1 CI Host Port Cable Handling Guidelines for HSJ Array Controllers 4–7
4.3.3.2 DSSI Host Port Cable Handling Guidelines for HSD30 Array Controllers 4–7
4.3.3.3 SCSI Host Port Cable Handling Guidelines for HSZ Array Controllers 4–9
4.3.3.4 Controller-to-Storage Shelf SCSI–2 Device Cable Guidelines 4–9
4.4 Unpacking Your Subsystem 4–10
4.5 Installing a Preconfigured or CTO Controller Subsystem 4–10
4.6 Installation Instructions for Preconfigured and CTO Subsystems 4–14
4.6.1 Connecting a Terminal to the Maintenance Terminal Port 4–19
4.6.2 Preset Controller Configuration Parameters 4–20
4.6.2.1 Installing Host Port Cables for HSJ Array Controllers 4–21
4.6.2.2 Installing Host Port Cables, Trilinks, and Terminators for HSD30 Array Controllers 4–22
4.6.2.3 Installing Host Port Cables, Trilinks, and Terminators for HSZ Array Controllers 4–23
4.7 Creating a Dual-Redundant HS Array Controller Configuration 4–24
4.8 Installing the Program Card 4–27
4.9 Upgrading Your HS Array Controller Subsystem Components 4–30
4.10 Upgrading Your Cache Module 4–30

5 Controller Operations

5.1 HS Array Controller Initialization 5–1
5.1.1 Dual-Redundant Controller Configuration Initialization Sequence . . . 5–3
5.1.2 Controller Subsystem Initialization 5–3
5.1.3 Controller Cache Module Initialization Sequence 5–4
5.2 Command Line Interpreter 5–4
5.2.1 CLI Access 5–4
5.2.2 CLI Command Sets 5–5
5.2.3 How to Exit CLI 5–6
5.2.4 Setting Configuration Parameters for a Nonredundant Controller Configuration 5–6
5.2.5 Setting Configuration Parameters for a Dual-Redundant Controller Configuration 5–11
5.3 Using the TRANSPORTABLE and NOTRANSPORTABLE Qualifiers 5–17
5.4 Customer Acceptance Tests with Power Applied 5–17
5.5 How to Use and Interpret the Controller OCP Buttons and LEDs 5–18
5.5.1 Uses of the OCP Buttons and LEDs 5–18
5.5.2 How the OCP Functions 5–18

5.6 Power Supply Status LEDs 5–24
5.7 Battery Backup Unit (BBU) Status LEDs 5–24
5.8 Environmental Monitor Unit (EMU) for HSZ40–B*x* Array Controllers . . . 5–24
5.8.1 EMU Fault Detection 5–24
5.8.2 Controller Fault Detection 5–25
5.9 Description of Device Warm Swap 5–27
5.9.1 Device Warm Swap 5–27
5.9.1.1 Disk SBB Warm Swap Removal 5–27
5.9.1.2 Disk SBB Warm Swap Replacement 5–29
5.9.2 Tape Drive Warm Swap (Removal/Replacement) 5–30
5.10 When the Quiesce Bus State Is Not Displayed 5–30
5.11 Controller Warm Swap Utility (C_SWAP) 5–30
5.11.1 When to Use C_SWAP 5–31
5.11.2 Functions of C_SWAP 5–32
5.11.2.1 Removing a Controller and/or Cache Module During a C_SWAP Operation 5–32
5.11.2.2 Replacing a Controller and/or Cache Module During a C_SWAP Operation 5–34
5.12 How to Physically Remove a Controller Module 5–35
5.13 How to Physically Remove a Cache Module 5–38
5.14 How to Physically Replace a Controller Module 5–39
5.15 How to Physically Replace a Cache Module 5–43
5.16 Checking the Status of the Write-Back Cache Module Batteries 5–43
5.17 Using the Controller SHUTDOWN Command Prior to Turning Off Controller Power 5–43
5.18 Using DISMOUNT or SHUTDOWN Before Moving Devices 5–45

6 Working with RAID Arrays

6.1 HS Array Controller Family RAID Overview 6–1
6.1.1 RAID Level 0 6–2
6.1.2 RAID 0 & 1 6–2
6.1.3 RAID Level 1 6–2
6.1.4 RAID Level 3 6–3
6.1.5 RAID Level 5 6–4
6.2 RAID Array Terminology 6–4
6.3 RAIDset and Mirrorset Rules and Important Information 6–7
6.4 Avoiding Unwanted Unwritten Cached Data Conditions 6–8
6.4.1 Using CLI Commands with Write-Back Cache 6–9
6.5 Planning Your RAIDsets 6–9
6.5.1 Creating a RAIDset 6–10
6.5.2 Storageset SHOW Commands 6–11
6.5.3 Adding and Deleting Spareset Members 6–13
6.5.4 Showing and Deleting Failedset Members 6–14
6.5.5 Changing RAIDset Characteristics 6–14
6.5.6 Deleting a RAIDset 6–15
6.5.7 Moving a RAIDset 6–16
6.6 Adding a Stripeset (RAID Level 0) 6–17
6.6.1 Moving a Stripeset or Stripeset Member 6–17
6.6.2 Showing Stripesets 6–17
6.7 Planning Your Mirrorsets 6–18
6.8 Using Mirrorsets to Obtain Snapshot Copies of Data 6–18
6.9 Mirrorset Considerations for Snapshot Copies 6–19
6.10 Steps for Creating a Mirrorset 6–20

6.10.1 Configuring Host Units into Mirrorsets 6–21
6.11 Mirrorset Command Overview 6–22
6.11.1 Creating a Mirrorset 6–22
6.11.2 Mirrorset SET Commands and Qualifiers 6–23
6.11.3 Mirrorset SHOW Commands 6–24
6.11.4 REDUCE *disk-device-name1* Command 6–24
6.11.5 MIRROR *disk-device-name container-name* Command 6–25
6.11.6 UNMIRROR disk_device-name 6–25
6.12 RAIDset and Mirrorset Availability, Performance, and Cost 6–25

7 Diagnostics and Utilities

7.1 Initialization Diagnostics 7–1
7.2 Connecting to the Controller 7–2
7.3 HS Array Controller Local Programs 7–2
7.3.1 DILX 7–2
7.3.1.1 Invoking DILX 7–3
7.3.1.2 Interrupting DILX Execution 7–4
7.3.1.3 Running DILX 7–4
7.3.2 DILX Examples 7–6
7.3.2.1 Using All Functions (Long Run) 7–6
7.3.2.2 Using All Defaults (Read-Only) 7–9
7.3.2.3 Using Auto-Configure with Half of the All Units Option 7–10
7.3.2.4 Using Auto-Configure with the All Units Option 7–11
7.3.2.5 Using Auto-Configure on an HSZ40 Array Controller 7–12
7.3.2.6 Using the All Units Option on an HSZ40 Array Controller 7–14
7.3.2.7 Using All Defaults on an HSZ40 Array Controller 7–15
7.3.3 TILX 7–17
7.3.3.1 Invoking TILX 7–17
7.3.3.2 Interrupting TILX Execution 7–18
7.3.3.3 Running TILX 7–18
7.3.4 TILX Examples 7–18
7.3.4.1 Using All Functions 7–19
7.3.4.2 Using All Defaults 7–20
7.3.5 VTDPY Utility 7–21
7.3.5.1 How to Run VTDPY 7–22
7.3.5.2 Using the VTDPY Control Keys 7–22
7.3.5.3 Using the VTDPY Command Line 7–22
7.3.5.4 How to Interpret the VTDPY Display Fields 7–23
7.3.6 Firmware Licensing System (FLS) 7–54
7.3.6.1 Enabling Options 7–54
7.3.6.2 Disabling Options 7–54
7.3.6.3 License Key 7–54
7.3.6.4 Using the Menu 7–54
7.3.6.5 Example 7–55
7.3.6.6 Messages 7–57
7.3.7 Configure (CONFIG) Utility 7–57
7.3.7.1 When to Use the Configure Utility 7–57
7.3.7.2 Description 7–57
7.3.7.3 Running the Configure Utility 7–57
7.3.8 HSZterm Utility 7–59
7.3.9 Fault Manager Utility (FMU) 7–59

7.3.10 Configuration Menu (CFMENU) 7–59
7.3.10.1 Restrictions 7–60
7.3.10.2 Main Menu 7–60
7.3.10.3 Adding Devices 7–60
7.3.10.4 Adding Mirrorsets 7–62
7.3.10.5 Adding Stripesets 7–62
7.3.10.6 Adding RAIDsets 7–63
7.3.10.7 Adding to Sparesets 7–64
7.3.10.8 Adding Passthroughs (HSJ and HSD30 array controllers) 7–65
7.3.10.9 Initializing Containers 7–66
7.3.10.10 Adding Units 7–67
7.3.10.11 Terminal Setup 7–68
7.3.10.12 Messages 7–68
7.3.10.13 Exiting CFMENU 7–71
7.3.11 Code Load/Code Patch (CLCP) Utility 7–71
7.3.11.1 Invoking the CLCP Utility 7–71
7.3.11.2 Code Loading 7–72
7.3.11.3 Using Code Load 7–72
7.3.11.4 Code Patching 7–74
7.3.11.5 Special Code Patch Considerations 7–75
7.3.11.6 Exit Option 7–75
7.3.12 CLONE Utility 7–85
7.3.13 Command Disks (HSJ and HSD30 Array Controllers) 7–101
7.3.13.1 Uses for Command Disks 7–101
7.3.13.2 Creating a Command Disk 7–101
7.3.13.3 Controller Setup 7–101
7.3.13.4 Host Setup 7–102
7.3.13.5 Communicating with a Command Disk 7–103
7.3.13.6 Performance 7–103
7.3.13.7 Maintenance 7–103

8 Operating System Support

8.1 Digital Supported Operating Systems 8–1
8.2 HS Array Controller System Management 8–2
8.3 OpenVMS and VMS VAX Operating Systems 8–2
8.3.1 CLI Access via DUP with OpenVMS Operating System 8–2
8.3.2 OpenVMS VAX Support 8–3
8.3.2.1 HSJ and HSD30 Array Controller Disks as Initialization Devices 8–4
8.3.2.2 HSJ and HSD30 Array Controller-Attached Disk Drives and VMS AUTOGEN Program 8–5
8.3.3 Using the OpenVMS Preferred Path Utility 8–6
8.3.4 SHOW DEVICE Command with OpenVMS 8–6
8.3.5 Using the CLUSTER_SIZE Qualifier for Large Devices or Storagesets with OpenVMS Systems 8–7
8.3.5.1 VAX VMS Version 5.5–1 (and earlier) 8–7
8.3.5.2 OpenVMS VAX V5.5–2 (and above) 8–8
8.3.6 Shadow Set Operation with OpenVMS Systems 8–8
8.3.7 ERF with OpenVMS Systems 8–9
8.3.8 DECevent for OpenVMS VAX and OpenVMS Alpha Operating Systems 8–13
8.3.9 OpenVMS Alpha Support 8–16
8.4 DEC OSF/1 Support 8–17

8.4.1 uerf with DEC OSF/1 for HSZ Array Controllers 8–17
8.4.2 DECsafe Available Server Environment (ASE) 8–21
8.4.3 Configurations and Device Support for the HSZ Array Controllers . . . 8–22
8.4.3.1 Virtual Terminal Capability 8–22
8.4.3.2 DEC OSF/1 Device Special Files for HSZ Array Controllers 8–22
8.5 Basic Steps for Configuring an HSZ Array Controller Under the DEC OSF/1 Operating System 8–25
8.6 Terminology 8–26
8.7 Specific Procedures 8–28
8.8 Configuring Units on the HSZ40 Array Controller 8–30
8.9 TRANSPORTABLE versus NOTRANSPORTABLE 8–32
8.10 Multiple Device Containers 8–32
8.11 Initialization of Controllers 8–33
8.12 Creation of Units 8–33
8.13 DEC OSF/1 Special Files 8–34
8.13.1 Creating a Device Special File 8–35
8.14 MAKEDEV Utility 8–36
8.15 Helpful Utilities 8–38
8.16 SCU Utility 8–39
8.17 Configuration File Entries for HSZ40 Units 8–40
8.18 Using iostat and Other Utilities 8–42
8.19 Using genvmunix 8–43

A Option Order Numbers

B Command Line Interpreter

B.1 CLI Commands B–1
ADD CDROM B–2
ADD DISK B–3
ADD LOADER B–5
ADD MIRRORSET B–6
ADD OPTICAL B–8
ADD PASSTHROUGH B–10
ADD RAIDSET B–11
ADD SPARESET B–13
ADD STRIPESET B–14
ADD TAPE B–15
ADD UNIT B–16
CLEAR_ERRORS CLI B–27
CLEAR_ERRORS INVALID_CACHE B–28
CLEAR_ERRORS LOST_DATA B–29
CLEAR_ERRORS UNKNOWN B–30
CLEAR_ERRORS UNWRITEABLE_DATA B–31
DELETE *container-name* B–32
DELETE FAILEDSET B–33
DELETE SPARESET B–34
DELETE *unit-number* B–35
DIRECTORY B–36
EXIT B–37

HELP B–38
INITIALIZE B–39
LOCATE B–41
MIRROR *disk-device-name1 container-name* B–43
REDUCE *disk-device-name1 [disk-device-nameN]* B–45
RENAME B–47
RESTART OTHER_CONTROLLER B–48
RESTART THIS_CONTROLLER B–50
RETRY_ERRORS UNWRITEABLE_DATA B–53
RUN B–54
SELFTEST OTHER_CONTROLLER B–55
SELFTEST THIS_CONTROLLER B–57
SET *disk-container-name* B–59
SET FAILOVER B–60
SET *mirrorset-container-name* B–62
SET NOFAILOVER B–65
SET OTHER_CONTROLLER B–66
SET *RAIDset-container-name* B–73
SET THIS_CONTROLLER B–75
SET *unit-number* B–82
SHOW CDROMS B–92
SHOW *cdrom-container-name* B–93
SHOW DEVICES B–94
SHOW DISKS B–95
SHOW *disk-container-name* B–96
SHOW FAILEDSET B–97
SHOW LOADERS B–98
SHOW *loader-container-name* B–99
SHOW MIRRORSETS B–100
SHOW *mirrorset-container-name* B–102
SHOW OPTICALS B–103
SHOW *optical-container-name* B–104
SHOW OTHER_CONTROLLER B–105
SHOW PASSTHROUGH B–107
SHOW *passthrough-container-name* B–108
SHOW RAIDSETS B–109
SHOW *raidset-container-name* B–111
SHOW SPARESET B–112
SHOW STORAGESETS B–113
SHOW STRIPESETS B–115
SHOW *stripeset-container-name* B–117
SHOW TAPES B–118
SHOW *tape-container-name* B–119
SHOW THIS_CONTROLLER B–120
SHOW UNITS B–123
SHOW *unit-number* B–124
SHUTDOWN OTHER_CONTROLLER B–125

SHUTDOWN THIS_CONTROLLER B–127
UNMIRROR *disk-device-name* B–129
B.2 CLI Messages B–130
B.2.1 Error Conventions B–130
B.2.2 CLI Error Messages B–130
B.2.3 Warning Conventions B–150
B.2.4 CLI Warning Messages B–150
B.3 Device Configuration Examples B–154

Glossary

Index

Examples

4–1 No Cache Module Installed 4–32
4–2 Version 1 32-MB Read Cache Module 4–32
4–3 Version 2 32-MB Write-Back Cache Module 4–33
5–1 CLI EXIT Command Message 5–6
7–1 Using All Functions 7–6
7–2 Using All Defaults (Read-Only) 7–9
7–3 Using Auto-Configure with Half of the All Units Option 7–10
7–4 Using Auto-Configure with the All Units Option 7–11
7–5 Using Auto-Configure on an HSZ Controller 7–12
7–6 Using the All Units Option on an HSZ40 Controller 7–14
7–7 Using All Defaults on an HSZ40 Controller 7–16
7–8 Using All Functions 7–19
7–9 Using All Defaults 7–20
7–10 Cloning a Single Device Unit 7–87
7–11 Cloning a Stripeset 7–89
7–12 Cloning a Mirrorset 7–92
7–13 Cloning a Striped Mirrorset 7–96
8–1 OpenVMS Alpha V6.1 ERF Error Log Report 8–10
8–2 OpenVMS VAX ERF Error Log That Did Not Decode Fully 8–12
8–3 DECevent Bit-to-Text Translation Error Event Report 8–14
8–4 uerf HSZ40 Array Controller Error Event Log 8–18
8–5 uerf Utility Error Event Using the -Z Qualifier 8–20
8–6 Creating Device Special Files (NATIVE SCSI Host Adapter) 8–24
8–7 Creating Device Special Files (SCSI Host Adapter) 8–25
8–8 SCSI Bus Number Determination 8–28
8–9 Controller Host Side SCSI IDs of 0, 1, 2, and 3 8–34
8–10 Calculating the Minor Number for Device Special Files 8–35
8–11 Mknod Examples 8–35
8–12 How MAKEDEV Calculates the Minor Number 8–37
B–1 Initial Single Controller Configuration of an HSD30 Controller B–154
B–2 Initial Dual-Redundant Controller Configuration of an HSJ Controller B–154
B–3 Initial Single Controller Configuration of an HSZ Controller B–155

B–4 Setting the Terminal Speed and Parity B–155
B–5 Creating a Unit from a Disk Device B–155
B–6 Creating a Unit from a Tape Device B–155
B–7 Creating a Unit from a Four-Member Stripeset B–155
B–8 Creating a Unit from a Five-Member RAIDset B–156
B–9 Creating a Unit from a Disk Device and Setting the Write Protection B–156
B–10 Setting the Write Protection for an Existing Unit B–156
B–11 Renumbering Disk Unit 0 to Disk Unit 100 . . . . . B–156
B–12 Creating a Transportable Unit from a Disk Device B–156
B–13 Changing the Replacement Policy of a RAIDset B–157
B–14 Deleting the Unit, Stripeset, and All Disks Associated with a Stripeset B–157

Figures

1–1 HS Array Controller Subsystem in an SW800-Series Data Center Cabinet 1–4
1–2 Dual-Redundant HSJ30 Array Controller Subsystem—Block Diagram 1–5
1–3 Controller Storage Addressing 1–9
1–4 Host Storage Addressing (HSZ40 Array Controllers) 1–11
1–5 3½-Inch Storage SBB 1–16
1–6 5¼-Inch Storage SBB 1–17
1–7 Controller Shelf with a Dual-Redundant HSJ40 Array Controller Configuration 1–18
1–8 BA350–SB Fully Populated SBB Shelf 1–19
2–1 HS Array Controller Functional Block Diagram 2–2
2–2 HSJ40 Array Controller OCP and Program Card Locations 2–7
2–3 HSD30 Array Controller Operator Control Panel 2–8
2–4 HSZ40–B*x* Array Controller Operator Control Panel 2–9
2–5 HSJ Program Card and Eject Button Locations 2–10
2–6 Location of the MMJ Maintenance Terminal Port for HSJ and HSD30 Array Controllers 2–11
2–7 Phone Cable and Center-to-Offset Coupler for HSZ40–B*x* Array Controller MMJ Maintenance Terminal Port 2–12
2–8 Dual-Redundant Controller Configuration 2–21
3–1 SW800-Series Data Center Cabinet Loading Sequence with No Tape Positions 3–2
3–2 SW800-Series Data Center Cabinet Loading Sequence with Two Tape Drive Positions 3–4
3–3 SW800-Series Data Center Cabinet Loading Sequence with Four Tape Drive Positions 3–5
3–4 SW500-Series Cabinet Loading Sequence 3–7
3–5 SW500-Series Controller/Storage Cabinet Shelf and Tape Drive Locations 3–8
3–6 SW300-Series Deskside RAID Enclosure 3–9
3–7 Single Extension from Storage Shelf to Storage Shelf 3–10

3–8	Adjacent Devices on a Single Port	3–11
3–9	SW300-Series Cabinet Controller/Storage Shelf	3–12
3–10	Balanced Devices Within Storage Shelves	3–15
3–11	Optimal Availability Configuration Example	3–16
3–12	SW300-Series Cabinet Shelf SCSI Buses	3–24
4–1	Location of Program Card Eject Button	4–6
4–2	HSD30 Host Port Connector Mating Guide	4–8
4–3	HS Array Controller SW500-Series Cabinet	4–11
4–4	HS Array Controller SW800-Series Data Center Cabinet	4–12
4–5	SW300-Series Deskside RAID Enclosure	4–13
4–6	DSSI Host Port Cable Connection	4–16
4–7	SCSI Host Port Cable Connection—Nonredundant Configuration	4–17
4–8	SCSI Host Port Cable Connection—Dual-Redundant Configuration	4–18
4–9	Internal CI Cable with External CI Cables Attached for HSJ Array Controllers	4–19
4–10	Trilink Connector Block	4–23
4–11	Controller ID Numbers	4–26
4–12	Program Card and Its Eject Button (ESD Shield)	4–28
5–1	Controller Initialization Flow Chart	5–2
5–2	HSJ40 Operator Control Panel Reset and Port Buttons	5–19
5–3	HS Array Controllers Solid OCP LED Error Codes	5–20
5–4	HS Array Controllers Flashing OCP LED Error Codes	5–21
5–5	EMU Front Panel LEDs and Switches	5–25
5–6	SBB Warm Swap	5–29
5–7	Cabinet Grounding Stud	5–37
5–8	Four Front Bezel Screws, HSJ*xx* Controller	5–38
5–9	OCP Cable, HSJ Array Controller	5–41
5–10	Controller Shelf Rails	5–42
7–1	VTDPY Default Display for CI Controllers	7–24
7–2	VTDPY Default Display for DSSI Controllers	7–25
7–3	VTDPY Default Display for SCSI Controllers	7–26
7–4	VTDPY Device Performance Display	7–27
7–5	VTDPY Unit Cache Performance Display	7–28
7–6	VTDPY Brief CI Status Display	7–29
7–7	VTDPY Brief DSSI Status Display	7–30
7–8	VTDPY Brief SCSI Status Display	7–31
7–9	CFMENU Main Menu	7–60
7–10	CFMENU Device Menu (Before Adding Devices)	7–61
7–11	CFMENU Device Menu	7–61
7–12	CFMENU Mirrorset Menu	7–62
7–13	CFMENU Stripeset Menu	7–63
7–14	CFMENU RAIDset Menu	7–63
7–15	CFMENU Spareset/Failedset Menu	7–64
7–16	CFMENU Passthrough Menu	7–65
7–17	CFMENU Initialization Menu	7–66
7–18	CFMENU Unit Menu	7–67

Tables

1	HS Array Controller Models	xv
1–1	Summary of HS Array Controller Features	1–13
1–2	HSJ Array Controller and Cache Module Specifications	1–14
1–3	HSD30 Array Controller and Cache Module Specifications	1–15
1–4	HSZ Array Controller and Cache Module Specifications	1–15
3–1	High-Performance Devices per Port	3–14
3–2	3½-Inch SBB Configurations, 6-Port Controllers	3–18
3–3	3½-Inch SBB Configurations, 3-Port Controllers	3–19
3–4	5¼-Inch SBB Configurations, 6-Port Controllers	3–20
3–5	5¼-Inch SBB Configurations, 3-Port Controllers	3–21
3–6	Small Shelf Count Configurations, 6-Port Controllers	3–22
3–7	Small Shelf Count Configurations, 3-Port Controller	3–22
3–8	SW300-Series Cabinet Shelf Configuration	3–23
3–9	SCSI Bus Maximum Lengths	3–24
4–1	StorageWorks Environmental Specifications	4–2
4–2	SCSI Bus Parameters	4–9
4–3	Read and Write-Back Cache Upgrade Ordering Information for HSJ40 Array Controllers	4–34
4–4	Read and Write-Back Cache Upgrade Ordering Information for HSJ30 Array Controllers	4–34
4–5	Read and Write-Back Cache Upgrade Ordering Information for HSD30 Array Controllers	4–34
4–6	Read and Write-Back Cache Upgrade Ordering Information for HSZ40–A*x* and HSZ40–B*x* Array Controllers	4–35
5–1	EMU Front Panel LEDS/Switches and Error Descriptions	5–26
5–2	Controller Module Removal	5–36
5–3	Cache Module Removal	5–39
5–4	Controller Module Replacement	5–40
5–5	Cache Module Replacement	5–43
7–1	VTDPY Control Keys	7–22
7–2	VTDPY Commands	7–22
7–3	Thread Description	7–36
8–1	Minimum Operating System Support for HS Array Controllers	8–2
A–1	HSJ30 Array Controller Options	A–1
A–2	HSJ40 Array Controller Options	A–1
A–3	HSJ42 Array Controller Subsystem Options	A–2
A–4	HSJ44 Array Controller Subsystem Options	A–2
A–5	HSD30 Controller Options	A–2
A–6	HSZ40–A*x* Controller Options	A–3
A–7	HSZ40–B*x* Controller Options	A–3
A–8	HSJ40 Array Controller Preconfigured Subsystems Options	A–5

Preface

Introduction

This *StorageWorks Array Controllers HS Family of Array Controllers User's Guide* contains instructions for installing and using HSJ30, HSJ40, HSD30, HSZ40–A*x*, and HSZ40–B*x* array controllers.

For purposes of this manual, the term ''HS array controller'' refers to several models, as shown in Table 1.

Table 1 HS Array Controller Models

Series	Model	Controllers *not* covered in this manual[1]
HSJ™	HSJ40 HSJ30	Any HSC™ controller
HSD30™	HSD30	HSD05 and related controllers
HSZ™	HSZ40–A*x* HSZ40–B*x*	HSZ10 and related controllers

[1]The controllers listed in this column are *not* part of the HS array controller family.

The HSZ40–B*x* is an enhanced verion of the HSZ40–A*x* array controller. The –B*x* version allows firmware to be downline loaded to its program card. The HSZ40–A*x* will never support program card code load.

Intended Audience

This manual is intended for customers, system managers, and Digital Multivendor Customer Services engineers responsible for installing and using HS array controller subsystems.

Structure

This manual is organized as follows:

Chapter 1 Provides an overview of the HS family of array controllers, physical descriptions of HS array controllers, storage addressing, controller features, a discussion of the StorageWorks shelves and cabinets that house HS array controllers, module specification tables, and host protocols.

Chapter 2 Provides a technical hardware overview of HS array controllers and a summary of how the hardware (including read and write-back cache modules, OCPs, and program cards) and firmware works. A description of the failover process for HSJ, HSD30, and HSZ array controllers is included.

Chapter 3	Describes the configuration rules and restrictions for standard and nonstandard HS array controller subsystems. The maximum lengths for host port cables is listed, as well as supported host adapters for each controller model.
Chapter 4	Describes site preparation requirements, personnel and tools needed for installation, electrostatic discharge protection, subsystem component handling guidelines, preconfigured subsystem array controller/cache module installation procedure references, and a method for determining your cache module type.
Chapter 5	Describes array controller initialization, how to set subsystem configuration parameters from the command line interpreter (CLI), when to use TRANSPORTABLE and NOTRANSPORTABLE qualifiers, customer acceptance tests with power applied, how to locate and read fault LEDs on the operator control panel (OCP), SBB status LEDs, EMU, device warm swap and array controller warm swap (C_SWAP) procedures, array controller/cache module remove/replace procedures, controller SHUTDOWN and host operating system DISMOUNT commands.
Chapter 6	Lists the supported RAID levels with brief descriptions for the Version 2.5 HS Operating firmware (HSOF) release. Describes how to use RAIDsets and gives examples for adding, deleting, moving, and showing RAIDsets. Gives RAIDset rules and important information about RAIDsets. Describes stripesets, sparesets, and failedsets. Describes how to use mirrorsets and striped mirrorsets.
Chapter 7	Describes when HS array controllers initialize, how to run online diagnostics and user utilities, and run local controller programs such as, DILX, TILX, VTDPY, firmware licensing system (FLS), controller warm swap (C_SWAP), CONFIG, HSZterm, fault manager utility (FMU), CFMENU, Code Load /Code Patch (CLCP) utility, and the CLONE utility. Describes command disks and how to create them.
Chapter 8	Describes the operating system support for HS array controllers, as well as restrictions and comments for each operating system. Gives a general description of error log report tools including: ERF, DECevent, and UERF. Describes how to configure HSZ array controllers under the DEC OSF/1 operating system.
Appendix A	Lists HS array controller option order numbers.
Appendix B	Gives the HS array controller command line interpreter (CLI) specification in its entirety, and shows some examples.
Glossary	Defines acronyms and other terms specific to StorageWorks HS Family of Array Controllers and associated cabinets and shelves.

Related Documentation

The following table lists documents that contain information related to this product:

Document Title	Order Number
DECevent Analysis and Notification Utility for OpenVMS User and Reference Guide	AA–Q73LA–TE
DECevent Installation Guide	AA–Q73JA–TE
DECevent Translation and Reporting Utility for OpenVMS User and Reference Guide	AA–Q73KA-TE
HSJ30/40 Firmware Array Controller Software Product Description (SPD47.26.07) for V2.5 HSOF	AE–PYTGH–TE

Document Title	Order Number
HSD30 Firmware Array Controller Software Product Description (SPD 53.53.03) for V2.5 HSOF	AE–Q6HKD–TE
HSZ40 Firmware Array Controller Software Product Description (SPD 53.54.04) for V2.5 HSOF	AE–Q6HME–TE
HS Family of Array Controllers Optional Operating Firmware (HSOF) Software Product Description (SPD 53.38.01) for V2.5	AE–QDA4B–TE
StorageWorks Array Controllers HS Family of Array Controllers Service Manual (Use revision D01 for HSOF Version 2.5.)	EK–HSFAM–SV
StorageWorks Array Controllers HSJ30/40 Array Controller Operating Firmware Release Notes (Use revision L01 for HSOF Version 2.5)	EK–HSFAM–RN
StorageWorks Array Controllers HSD30 Array Controller Operating Firmware Release Notes (User revision D01 for HSOF Version 2.5)	EK–HSD30–RN
StorageWorks Array Controllers HSZ40 Array Controller Operating Firmware Release Notes (Use revision E01 for HSOF Version 2.5)	EK–HSZ40–RN
StorageWorks BA350–MA Controller Shelf User's Guide	EK–350MA–UG
StorageWorks Configuration Manager for DEC OSF/1 Installation Guide	AA–QC38A–TE
StorageWorks Configuration Manager for DEC OSF/1 System Manager's Guide for HSZterm	AA–QC39A–TE
StorageWorks Family StorageWorks Building Blocks User's Guide	EK–SBB35–UG
StorageWorks Metric Shelf Bracket Kit Installation Guide	EK–35XRD–IG
StorageWorks Solutions Configuration Guide	EK–BA350–CG
StorageWorks Solutions Shelf and SBB User's Guide	EK–BA350–UG
StorageWorks Solutions SW300-Series RAID Enclosure Installation and User's Guide	EK–SW300–UG
StorageWorks SW500-Series Cabinet Installation and User's Guide	EK–SW500–IG
StorageWorks SW500-Series Cabinet Cable Distribution Unit Installation Guide	EK–SW5CU–IG
StorageWorks SW800-Series Data Center Cabinet Cable Distribution Unit Installation Sheet	EK–SWCDU–IS
StorageWorks SW800-Series Data Center Cabinet Installation and User's Guide	EK–SW800–IG
The Digital Guide to RAID Storage Technology	EC–B1960–45
The RAIDBOOK—A Source for RAID Technology	RAID Advisory Board
VAXcluster Console System User's Guide	AA–GV45D–TE
VAXcluster Systems Guidelines for VAXcluster System Configurations	EK–VAXCS–CG

Documentation Conventions

The following conventions are used in this manual:

boldface type	Boldface type in examples indicates user input. Boldface type in text indicates the first instance of terms defined in either the text, in the glossary, or both. Boldface type is used also for controller model names to help the reader pick out the information for their specific model in procedures that talk about the differences of each model.
italic type	Italic type indicates emphasis and complete manual titles.
UPPERCASE	Words in uppercase text indicate a command, the name of a file, or an abbreviation for a system privilege.
Ctrl/*x*	Ctrl/*x* indicates that you hold down the Ctrl key while you press another key, indicated by *x*.

1

Introduction to HS Array Controllers

This chapter contains an overview of the HS family of array controllers. A list of key attributes for each controller and the controller shelves are provided. This chapter also provides a brief description of the protocols used with each controller model's functional environment.

1.1 Overview of HS Array Controllers

The HS array controllers are a family of controller products designed to provide open interface interconnection for the following:

- Digital Equipment Corporation **small computer system interface** (SCSI) devices:
  - Solid state disks
  - Disk drives
  - Tape drives
  - Tape loaders
  - CD–ROM drives
- Redundant array of independent disks (RAID)

Note

The HS array controllers support a variety of storage devices. Refer to product-specific release notes and software product descriptions for supported devices for each controller model (HSJ30/40, HSD30, HSZ40–A*x*, or HSZ40–B*x* array controllers). Any limitations or restrictions not already provided in this manual are provided in the product-specific release notes for your HSOF version number.

The HS family of array controllers is an integral part of the StorageWorks array subsystem. HS array controllers provide high performance, high availability, and high connectivity access to SCSI–2 devices from the host by way of a variety of interconnects. The interconnects discussed in this manual are CI, DSSI, and SCSI for the HSJ30/HSJ40, HSD30, and HSZ array controllers respectively. These controllers support various operating systems as described in controller-specific release notes, software product descriptions (SPDs), and in Chapter 8 of this manual.

Note

HSJ30 and HSJ40 array controllers hereafter are referred to as HSJ array controllers unless the text is controller-model specific.

HSZ40–A*x* and HSZ40–B*x* array controllers hereafter are referred to as HSZ array controllers unless the text is controller-model specific.

1.2 Housing for HS Array Controllers

The controller modules and associated read and write-back cache modules mount in a controller shelf.[1] Each controller shelf supports up to two controller modules, two read or write-back cache modules, and one or two shelf power supplies.

The controller shelf slides into slots in StorageWorks cabinets. The same array cabinets contain storage shelves that hold the storage devices supported by the controllers.

The SCSI–2 device cables (also known as port or bus cables) are connected to the controller shelf backplane, routed out the front of the controller shelf, and routed into the front of storage shelves (such as the BA350–SB shelf) that hold the SCSI–2 devices.

At the lowest level, a SCSI–2 device fits into a plastic carrier. The combination of the plastic carrier and the storage device is called a **StorageWorks building block** (SBB). These SBB carriers slide into slots in the storage shelves.

1.3 Physical Description of HS Array Controllers

The following sections describe the physical attributes of each HS array controller model including HSJ (both HSJ30 and HSJ40 array controllers), HSD30, and HSZ (HSZ40–A*x* and HSZ40–B*x* array controllers).

1.3.1 HSJ30 and HSJ40 Array Controllers Physical Description

The physical HSJ40 array controller module has three SCSI–2 shelf backplane connectors with the following features:

- Each shelf backplane connector supports two SCSI–2 ports for a total of six SCSI–2 ports (buses) for the HSJ40 controller.

  The HSJ30 array controller supports three SCSI–2 ports. The command line interpreter does not allow any configurations past port 3 to be entered for HSJ30 controllers (devices on ports 4, 5, and 6 are ignored).

- Each SCSI–2 port supports up to six (or seven) SCSI–2 devices,[2], depending on the subsystem configuration.

Note

The HSJ30 controller supports up to 18 devices in a dual-redundant configuration. Lower availability configurations can support up to 21 devices (seven per SCSI–2 port) if nonredundant power is not used. Other

[1] Controllers and their cache modules can reside in either a BA350–MA controller shelf or a SW300-series cabinet shelf.

[2] An HSJ40 dual-redundant controller configuration supports up to 36 devices. Lower availability configurations can support up to 42 devices (seven per SCSI–2 port) but this will sacrifice a convenient upgrade to any of the possible higher availability options, such as redundant power. For this reason, Digital does not recommend this configuration.

availability options also are sacrificed. Digital does not recommend this configuration.

- The six SCSI–2 device cables (three for HSJ30) from the controller shelf can be routed to more than one SBB shelf as desired, taking into consideration prescribed configuration rules and restrictions as listed in Chapter 3.

The HSJ array controllers consist of a single module that can be configured alone **(nonredundant)** or with a second *like* controller module for **dual-redundant** availability, and a read or write-back cache module (one for each controller module).

The HSJ array controllers interconnect to the host by way of Digital's CI interface. An internal CI host port cable connects to each controller and routes through the cabinet, exiting at the back of the cabinet near the floor. Four external (blue) CI cables connect to the end of each internal CI host port connector and then route to a star coupler. From the star coupler, the cables route to the host computer. Refer to the *VAXcluster Systems Guidelines for VAXcluster System Configurations* manual for supported configurations with star couplers. See Section 4.6.2.1 for installation instructions for CI host port cables.

The combination of HSJ array controllers in controller shelves, storage shelves with their power supplies, assorted SCSI–2 device and CI cables, and cable distribution units (CDU) compose the HSJ array controller subsystem. Refer to the *VAXcluster Systems Guidelines for VAXcluster System Configurations* manual for supported configurations with storage components.

Figure 1–1 shows an HS array controller subsystem configuration in an SW800-series (1700 mm high) data center cabinet (front view). Controller subsystems also are available in SW500-series (1100 mm high) cabinets and SW300-series deskside RAID enclosure cabinets.

Figure 1–1 HS Array Controller Subsystem in an SW800-Series Data Center Cabinet

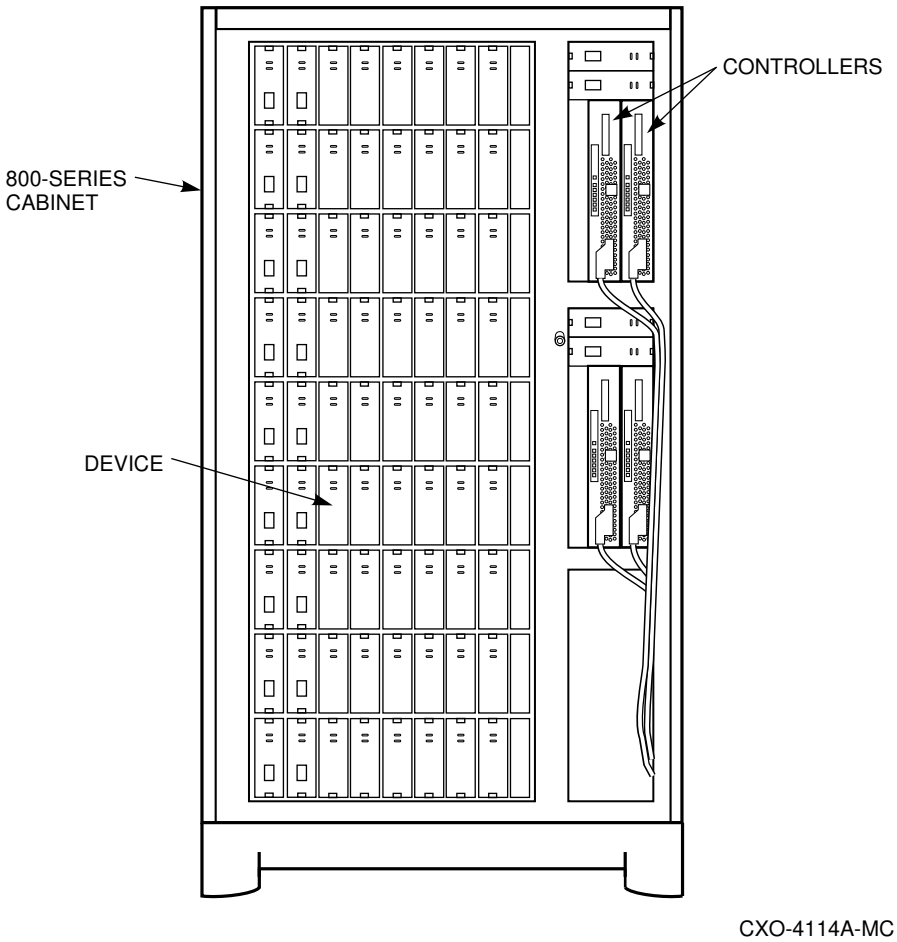

Figure 1–2 depicts a block diagram of a dual-redundant HSJ30 controller subsystem. In an HSJ30 dual-redundant configuration, two controllers attach to three SCSI–2 buses within the same controller shelf.

Note

The same block diagram applies to the HSJ40 controller, except the HSJ40 controller has six SCSI–2 buses.

1.3.2 HSD30 Array Controller Physical Description

The physical HSD30 array controller module has three shelf backplane connectors with the following features:

- One SCSI–2 shelf backplane connector supports two SCSI–2 ports, and a second SCSI–2 connector supports one SCSI–2 port for a total of three SCSI–2 ports (buses). The third connector is not used.

Figure 1–2 Dual-Redundant HSJ30 Array Controller Subsystem—Block Diagram

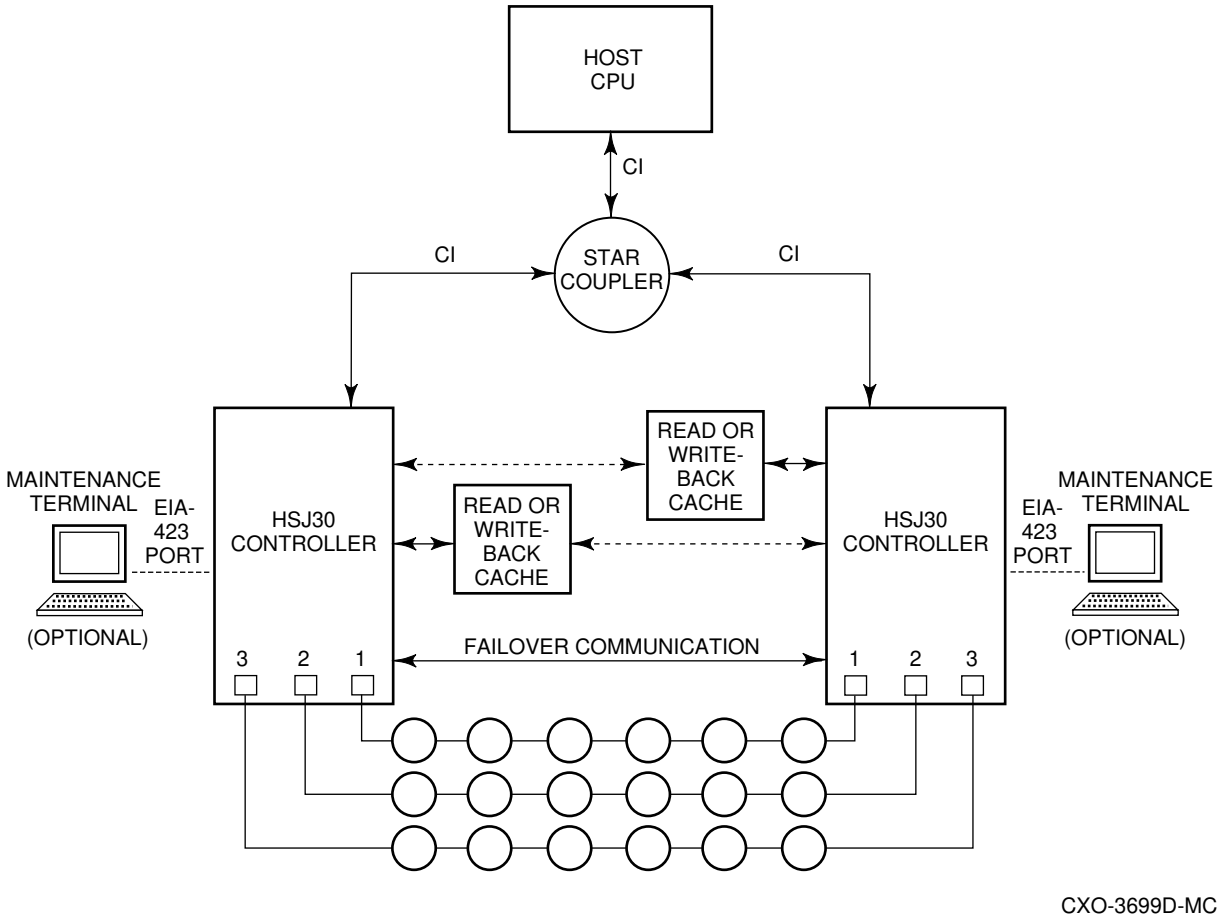

- Each SCSI–2 port supports up to six (or seven) SCSI–2 devices,[3], depending on the subsystem configuration.
- The three SCSI–2 port cables from the controller shelf can be routed to more than one storage shelf as desired, taking into consideration prescribed configuration rules and restrictions as listed in Chapter 3.

The HSD30 array controller consists of a single module that can be configured alone (nonredundant) (with its cache module) or with a second HSD30 controller module (with its cache module) for dual-redundant availability.

The HSD30 array controller host port is an 8-bit wide DSSI interface. The HSD30 array controller requires a DSSI trilink connector block (Digital part number 12–39921–02) mounted on its host connector (which is included with each controller), and requires external terminators (Digital part number 12–31281–01) as appropriate. (See Section 4.6.2.2 for installation instructions for DSSI host port cables.)

[3] An HSD30 dual-redundant controller configuration supports up to 18 devices. Lower availability configurations can support up to 21 devices (seven per SCSI–2 port) but this will sacrifice a convenient upgrade to any of the possible higher availability options, such as redundant power.

Supported configurations allow up to four HSD30 array controllers per DSSI bus (for example, four nonredundant controllers, or two dual-redundant controller pairs, or one dual-redundant controller pair and two nonredundant controllers). Refer to the *StorageWorks Array Controllers HSD30 Array Controller Operating Firmware Release Notes* for changes and/or restrictions.

Note

Separate buses are supported for an HSD30 array controller dual-redundant configuration using the OpenVMS Version 6.1 and higher operating system software.

The combination of HSD30 array controllers in controller shelves, storage shelves with their power supplies, assorted SCSI–2 device and DSSI host cables, and cable distribution units compose the HSD30 array controller subsystem. HSD30 array controller subsystems are available in SW800-series data center cabinets, SW500-series cabinets, or SW300-series deskside enclosures.

DSSI Bus Rules

The following are DSSI bus rules for properly installing and operating your HSD30 array controller subsystem:

- All systems connected to the same DSSI bus must have a common power/ground.
- Each DSSI bus supports up to eight nodes. Each of the following counts as one DSSI node:
  - A host DSSI adapter
  - An RF-disk controller interface
  - A TF-tape controller interface
  - An HSD30 array controller
  - An HSD05 controller
- Each DSSI bus must be terminated at each end at all times; breaking the bus while a cluster is operational can lead to data corruption.

Refer to the *VAXcluster Systems Guidelines for VAXcluster System Configurations* manual for supported host configurations with DSSI controllers.

1.3.3 HSZ Array Controller Physical Description

The physical HSZ array controller module has three shelf backplane connectors with the following features:

- Each shelf backplane connector supports two SCSI–2 ports for a total of six SCSI–2 ports (buses).
- Each SCSI–2 port supports up to six (or seven) SCSI–2 devices,[4], depending on the subsystem configuration.

[4] An HSZ40 dual-redundant controller configuration supports up to 36 devices. Lower availability configurations can support up to 42 devices (seven per SCSI–2 port) but this will sacrifice a convenient upgrade to any of the possible higher availability options, such as redundant power.

- The six SCSI–2 port cables from the controller shelf can be routed to more than one device shelf as desired, taking into consideration prescribed configuration rules and restrictions as listed in Chapter 3.

The HSZ array controller consists of a single module that is configured alone (nonredundant) or with a second *like* controller for dual-redundant availability in the controller shelf. One read cache or write-back cache module is supported for each controller module.

The HSZ array controller is supported in a single host environment, where the host can have a 8-bit single-ended adapter or a 16-bit differential adapter. The HSZ40 array controller host port is a 16-bit fast-wide-differential (FWD) SCSI–2 interface, which requires a DWZZA host adapter for those hosts that have 8-bit single-ended adapters. (See Chapter 3 for supported host adapters.)

Note

Either a desktop (DWZZA–AA) or SBB (DWZZA–VA) DWZZA host adapter can be used for hosts that require an 8-bit single-ended adapter. Refer to the *StorageWorks Solution Shelf and SBB User's Guide* for more information about DWZZA-series SCSI–2 bus signal converters.

The HSZ array controller *requires* a SCSI–2 trilink connector block (Digital part number 12–39921–01 or H885–AA) mounted on its host connector (which is included with each controller), and requires external terminators (H879–AA, 68-pin) as appropriate. See Section 4.6.2.3 for host port cable installation instructions.

The combination of HSZ array controllers in a controller shelf, storage shelves with their power supplies, assorted SCSI–2 device and SCSI–2 host cables, and cable distribution units, compose the HSZ40 array controller subsystem. HSZ array controller subsystems are available in SW800-series data center cabinets, SW500-series cabinets, or SW300-series deskside enclosures.

HSZ40–A*x* and HSZ40–B*x*

There are two HSZ40 array controller module versions, the original HSZ40–A*x* and the later HSZ40–B*x*. The HSZ40–B*x* array controller supports an environmental monitor unit (EMU) in an SW300-series deskside RAID enclosure cabinet and has a center-keyed modified modular jack (MMJ) maintenance terminal port connector.

1.4 Controller Host Interface Protocols

The CI (HSJ) and DSSI (HSD30) interfaces use MSCP and TMSCP as the storage control protocols through which access to the controller-attached SCSI–2 devices is obtained.

The SCSI FWD (HSZ) host interface uses the SCSI–2 protocol for a host to access LUNs attached to the controller (the controller being a SCSI target as seen by the host).

1.5 Addressing Storage Within the Subsystem

This section provides an overview of how a controller subsystem addresses storage. Storage is seen in two different ways, depending on your perspective and your controller model:

1. From the controller SCSI–2 device interface—At the physical device level
2. From the host interface—At the virtual device level

The following sections describe both levels of storage addressing.

1.5.1 Controller Storage Addressing

Note

This section on controller storage addressing applies to *all* controller models except where noted.

Figure 1–3 shows a typical physical storage device interface for an HSZ40 array controller. Each of the controller's six device ports supports a SCSI–2 bus connected with up to six devices. The devices typically reside in a StorageWorks BA350–S*x* SBB shelf.

Figure 1–3 Controller Storage Addressing

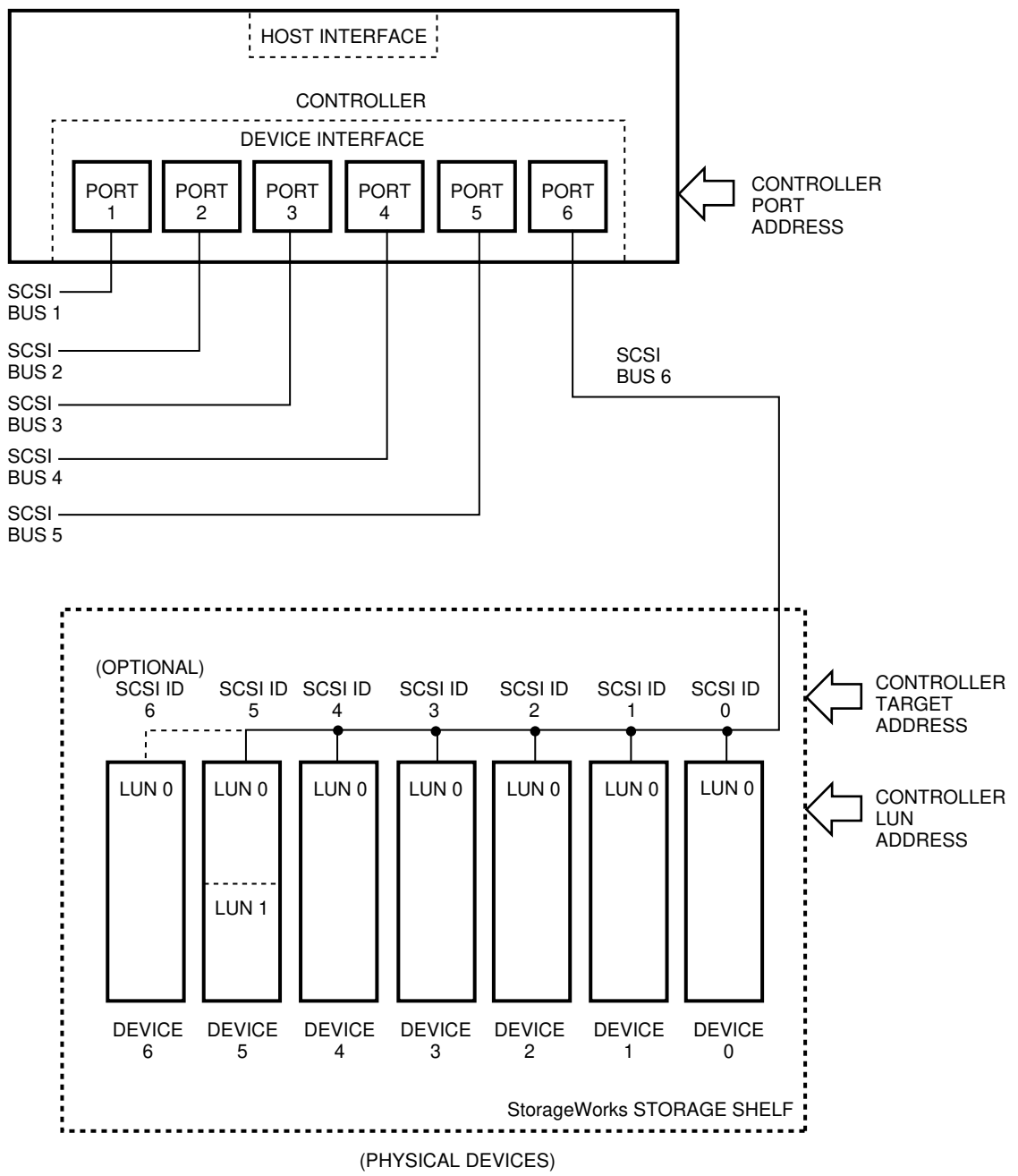

CXO-4596A-MC

HSJ and HSD30 array controllers support multiple LUNs per device port (and nonzero (0) LUNs) for certain tape loader devices. For these devices, the loader mechanism is addressed at LUN 1, and the tape drive mechanism is addressed at LUN 0. Other than the supported tape loader devices, all controllers support only one controller LUN per physical device or storageset. (A **storageset** is a collection of containers, such as a stripeset, RAIDset, or mirrorset, that together make up a separate container.) LUN 0 is the default controller LUN address for each device. A **container** is a term used to describe any entity that is capable

of storing data, whether it is a physical device or a group of physical devices. A disk, a stripeset, a RAIDset, or a mirrorset are examples of containers.

Controller Port Target LUN Addressing

Controller **Port Target LUN** (PTL) addressing is the process by which the controller selects storage space within a specific, physical, storage device. The process takes place in three steps:

1. The port selection—The controller selects the SCSI–2 bus port connected to a particular device.
2. The target selection—The controller selects the device's SCSI ID (that is, the target) on that port (bus).
3. The LUN selection—The controller selects the desired LUN within that physical device. In the current implementation, there is only one LUN on each device, and that LUN address is *always* zero, except for the multi-LUN tape loader support on HSJ and HSD30 array controllers as mentioned above.

Note that controller PTL addressing is always tied to a physical storage device.

1.5.2 Host Storage Addressing

Note

The information in this section applies to all controllers. However, see Section 1.5.3 for specific information on how a SCSI host addresses storage.

A typical host device interface consists of a number of host ports, each connected to a bus containing devices. From the host perspective, the controller is one of these devices.

To support certain high-level storage subsystem functions such as RAID, the controller presents the entire *physical* device configuration (from Figure 1–3) to the host as a group of **host logical units**. A host logical unit usually consists of storage data being distributed throughout more than one physical device (as with a RAIDset). The controller presents these logical units to the host as individually-addressable, virtual devices. The user configures host logical units using the CLI.

Note

Controller LUNs (devices) and host logical units *may* represent the same structure, but only if the user configures controller devices in a one-to-one relationship with host logical units. Note that stripesets, RAIDsets, and mirrorsets cannot be configured in such a one-to-one relationship.

For this reason, host addressing is often tied to a virtual storage device (a storageset).

1.5.3 Host Storage Addressing (HSZ Array Controllers)

Figure 1–4 shows a typical connection between an HSZ array controller and its host. In this case, the SCSI–2 host device interface consists of device ports (buses), each connected to a SCSI–2 bus containing up to eight devices. The HSZ array controller resides on one of the SCSI–2 buses. A single HSZ array controller can be assigned up to four SCSI target IDs on the bus (a dual-redundant pair also can have up to four SCSI target IDs between them; they share the same four).

Figure 1–4 Host Storage Addressing (HSZ40 Array Controllers)

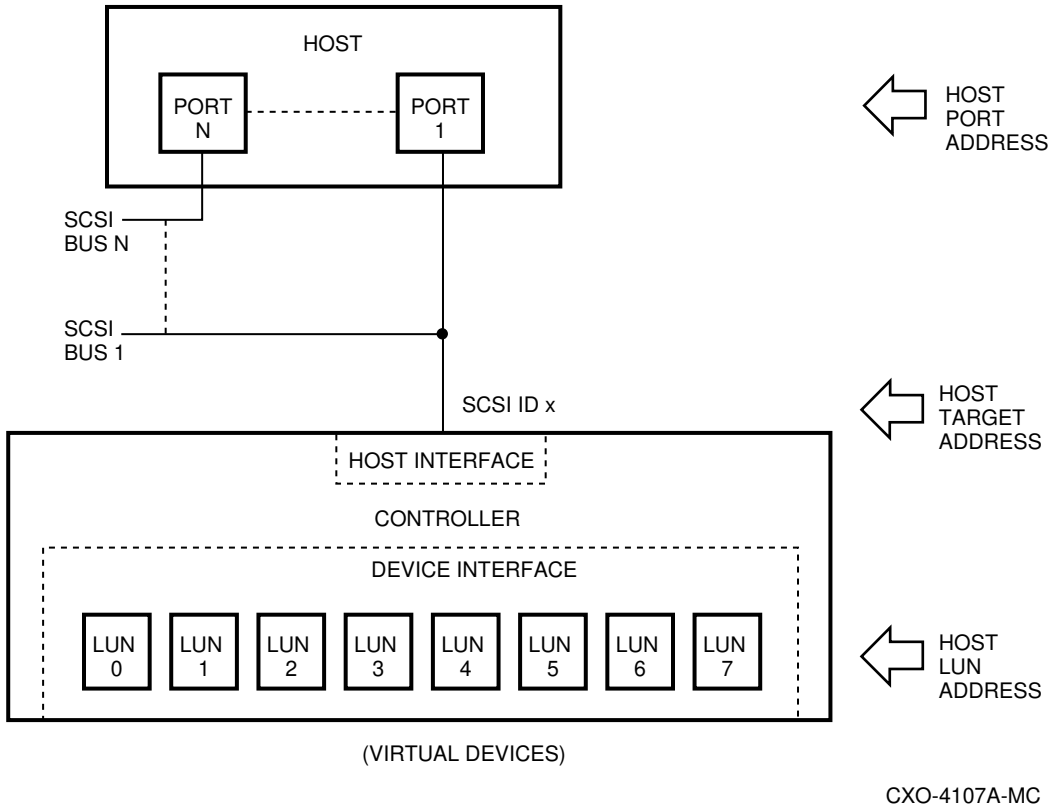

A SCSI host also sees host logical units through the controller. However, in SCSI systems, there can be only up to eight units per ID. For the HSZ array controller, this translates as a maximum of 32 units, or eight per each ID. The host addresses each logical unit by a SCSI logical unit number, *also* called a LUN.

Note

Although they share the same name, controller LUNs and SCSI host LUNs are logical addresses for two different storage structures. Controller LUNs exist only on the controller's device interface, and SCSI host LUNs exist only on a SCSI host's device interface.

Controller LUNs and SCSI host LUNs *may* represent the same structure, but only if the user configures (up to) eight controller devices in a one-to-one unit relationship with the host. This situation rarely occurs under normal operation.

Host Port Target LUN Addressing (HSZ Array Controllers)

Note

Non-SCSI hosts (CI, DSSI), though they access virtual devices, do not use a PTL addressing scheme. Any unit seen by these hosts is simply called a host logical unit (not a LUN).

Host addressing is the process by which a SCSI host selects a logical unit made up of physical devices connected to an HSZ array controller. The process takes place in four steps:

1. The adapter selection—The host selects the adapter with one (or more) SCSI–2 busses.
2. The port selection—The host selects the SCSI–2 bus that has the HSZ array controller connected to it (for adapters with two or more SCSI–2 bus interfaces).
3. The target selection—The host selects one of the controller's SCSI IDs (that is, the targets) on that port (bus).
4. The LUN selection—The host addresses the controller with the LUN of the desired host logical unit. The controller translates the LUN into the physical device addresses required to allow the host access to the virtual device.

1.6 HSJ Array Controller Dual Data Link

The HSJ array controllers fully support **dual data link** (DDL) operations. That is, they can have operations in progress simultaneously on both CI paths. Either receive/receive, receive/transmit, or transmit/transmit operations can be active at the same time. The only restriction on a DDL operation is that simultaneous transmit and simultaneous receive operations cannot be active on the same virtual circuit. The packets that are simultaneously active can be to any two separate CI nodes, or a transmit and a receive operation can be active to the same node if it also supports DDL operation. Each CI path (Path A and Path B) runs in half duplex, that is, it can either be transmitting or receiving, but not both at the same time.

1.7 HS Array Controller Features

The following text, as well as Table 1–1, provides a summary of the features of HS array controllers.

Remote system management is performed through the use of the following:

- DUP protocol for CI pass-through from the host to the controller's CLI. The HSJ and HSD30 array controllers support DUP connections.

- HSZ array controllers can use a SCSI virtual terminal connection from a host application utility called HSZterm (or *StorageWorks HSZ40 Array Controller Utility for DEC OSF/1 Version 1.0*). Refer to the *StorageWorks Configuration Manager for DEC OSF/1 Installation Guide* and the *StorageWorks Manager for DEC OSF/1 System Manager's Guide for HSZterm* for complete HSZterm installation and operating instructions.
- For HSJ and HSD30 array controllers, a special storage configuration for communication with generic SCSI–2 devices is supported. The concept centers around a virtual unit called a **command disk**, that allows an MSCP-based host to control any physical SCSI–2 device. For details about the uses and creation of a command disk, see Chapter 7.

Table 1–1 Summary of HS Array Controller Features

Feature	HSJ30	HSJ40	HSD30	HSZ40
Host bus	CI	CI	DSSI	SCSI–2 FWD
Host protocols	SCS, MSCP, TMSCP, DUP	SCS, MSCP, TMSCP, DUP	SCS, MSCP, TMSCP, DUP	SCSI–2
Storage device protocol	SCSI–2	SCSI–2	SCSI–2	SCSI–2
Number of SCSI device ports	3	6	3	6
Maximum number of SCSI–2 devices	18 (or 21[1])	36 (or 42[1])	18 (or 21[1])	36 (or 42[1])
Controller shared memory	8 MB	8 MB	8 MB	8 MB
Nonvolatile memory (NVMEM)	32 KB	32 KB	32 KB	32 KB
Read cache module	16- or 32-MB	16- or 32-MB	16- or 32-MB	16- or 32-MB
Write-back cache module	16- or 32-MB	16- or 32-MB	16- or 32 MB	16- or 32-MB
RAID levels supported	RAID 0/1/0&1/3/5	RAID 0/1/0&1/3/5	RAID 0/1/0&1/3/5	RAID 0/1/0&1/3/5
Mixed disk and tape support[2]	Yes	Yes	Yes	N/A
Sequential access tape media loader	Yes	Yes	Yes	N/A
Dual-redundant configurations	Yes	Yes	Yes	Yes
Program card firmware update	Yes	Yes	Yes	Yes
Device warm swap support	Yes	Yes	Yes	Yes
Controller warm swap support	Yes	Yes	Yes	Yes
BBR and MSCP forced error support	Yes	Yes	Yes	N/A

[1]A dual-redundant controller configuration supports up to six devices per port. A nonredundant controller configuration supports up to seven devices per port, but this sacrifices a convenient upgrade to high availability and redundant/backup power supplies.

[2]On the same or different ports.

(continued on next page)

Table 1–1 (Cont.) Summary of HS Array Controller Features

Feature	HSJ30	HSJ40	HSD30	HSZ40
Tagged command queuing	N/A	N/A	N/A	Yes
Error correction code (ECC)	Correction of program card firmware	Correction of program card firmware	Correction of program card firmware	Correction of program card firmware
Error correction code (ECC) on cache and shared memory	Yes	Yes	Yes	Yes
Controller-based exercisers for device testing	Yes	Yes	Yes	Yes
Active device polling	Yes	Yes	Yes	N/A
Preferred path preservation	Yes	Yes	Yes	N/A
Preferred ID	N/A	N/A	N/A	Yes
Random access tapes /loaders	Yes	Yes	Yes	N/A
Command disk (passthrough unit)	Yes	Yes	Yes	N/A
Direct print	Yes	Yes	Yes	Yes
Firmware code patch	Yes	Yes	Yes	Yes
Firmware code load	No	No	No	Yes

1.8 Controllers and Cache Modules Specifications

Tables 1–2, 1–3, and 1–4 list the physical and electrical specifications for the HS array controllers and cache modules.

Table 1–2 HSJ Array Controller and Cache Module Specifications

Specification	Controller Module Typical	Controller Module Maximum	Read Cache 16 MB	Read Cache 32 MB	Write-Back Cache 16 MB	Write-Back Cache 32 MB
Width	12.5 inches	N/A	12.5 inches	12.5 inches	12.5 inches	12.5 inches
Depth	9.5 inches	N/A	7.75 inches	7.75	7.75 inches	7.75 inches
Power Consumption	39.04 watts	45.58 watts	1.82 watts	2.02 watts	2.28 watts	2.48 watts
@ +5 V	6.2 A	7.1 A	360 mA	400 mA	360 mA	400 mA
@ +12 V	670 mA	840 mA	2 mA	2 mA	40 mA[1]	40 mA[1]

[1]With fully charged batteries. If the batteries for your 16- or 32-MB write-back cache module are in a charging state, the current at +12 V is 560 mA, which adds another 6.24 watts to the module power consumption.

Table 1–3 HSD30 Array Controller and Cache Module Specifications

Specification	Controller Module Typical	Controller Module Maximum	Read Cache 16 MB	Read Cache 32 MB	Write-Back Cache 16 MB	Write-Back Cache 32 MB
Width	12.5 inches	N/A	12.5 inches	12.5 inches	12.5 inches	12.5 inches
Depth	8.75 inches	N/A	7.75 inches	7.75 inches	7.75 inches	7.75 inches
Power Consumption	20.76 watts	23.04 watts	1.82 watts	2.02 watts	2.28 watts	2.48 watts
@ +5 V	4.15 A	4.56 A	360 mA	400 mA	360 mA	400 mA
@ +12 V	01 mA	02 mA	2 mA	2 mA	40 mA[1]	40 mA[1]

[1]With fully charged batteries. If the batteries for your 16- or 32-MB write-back cache module are in a charging state, the current at +12 V is 560 mA, which adds another 6.24 watts to the module power consumption.

Table 1–4 HSZ Array Controller and Cache Module Specifications

Specification	Controller Module Typical	Controller Module Maximum	Read Cache 16 MB	Read Cache 32 MB	Write-Back Cache 16 MB	Write-Back Cache 32 MB
Width	12.5 inches	N/A	12.5 inches	12.5 inches	12.5 inches	12.5 inches
Depth	8.75 inches	N/A	7.75 inches	7.75 inches	7.75 inches	7.75 inches
Power Consumption	23.27 watts	25.84 watts	1.82 watts	2.02 watts	2.28 watts	2.48 watts
@ +5 V	4.63 A	5.12 A	360 mA	400 mA	360 mA	400 mA
@ +12 V	10 mA	20 mA	2 mA	2 mA	40 mA[1]	40 mA[1]

[1]With fully charged batteries. If the batteries for your 16- or 32-MB write-back cache module are in a charging state, the current at +12 V is 560 mA, which adds another 6.24 watts to the module power consumption.

1.9 Ordering HS Array Controller Cache Modules

A 16- or 32-MB read cache module or 16- or 32-MB write-back cache module can be ordered with an HS array controller. The write-back cache module must be ordered if you wish to use RAID functionality.

Note

Remember that options and upgrades have different order numbers. You can choose between a 16- or 32-MB read cache, or 16- or 32-MB write-back cache *option* when you place your controller order. Separate *upgrade kits* with their own part numbers are available when you are ready to upgrade your existing cache modules.

1.10 StorageWorks Controller Subsystem Products

Digital offers several preconfigured HS array controller subsystems. However, if you wish to customize your own system, read the *StorageWorks Solution Configuration Guide* and the *StorageWorks Solutions Shelf and SBB User's Guide* for guidance in creating a customized, **configure-to-order (CTO)** subsystem.

CAUTION

If you decide to install SCSI–2 devices that have not been qualified by Digital for use with your array controller, the performance and correct operation of those devices or the controllers may not be satisfactory and is not guaranteed by Digital.

Snap-in SBBs can provide power, controllers, storage, adapters, and **battery back-up units** (BBUs). Not all SBB types are supported by each type of HS array controller. Refer to HS array controller model-specific **software product descriptions** (SPDs) and release notes for supported device lists.

Most of the Digital's SBB devices come in either a 3½-inch or a 5¼-inch SBB as shown in Figures 1–5 and 1–6.

Figure 1–5 3½-Inch Storage SBB

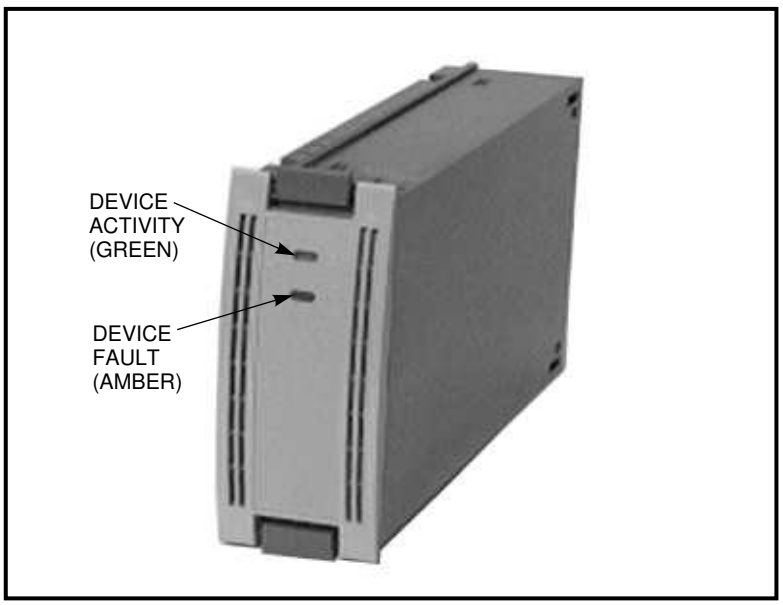

CXO-3671A-PH

Figure 1–6 5¼-Inch Storage SBB

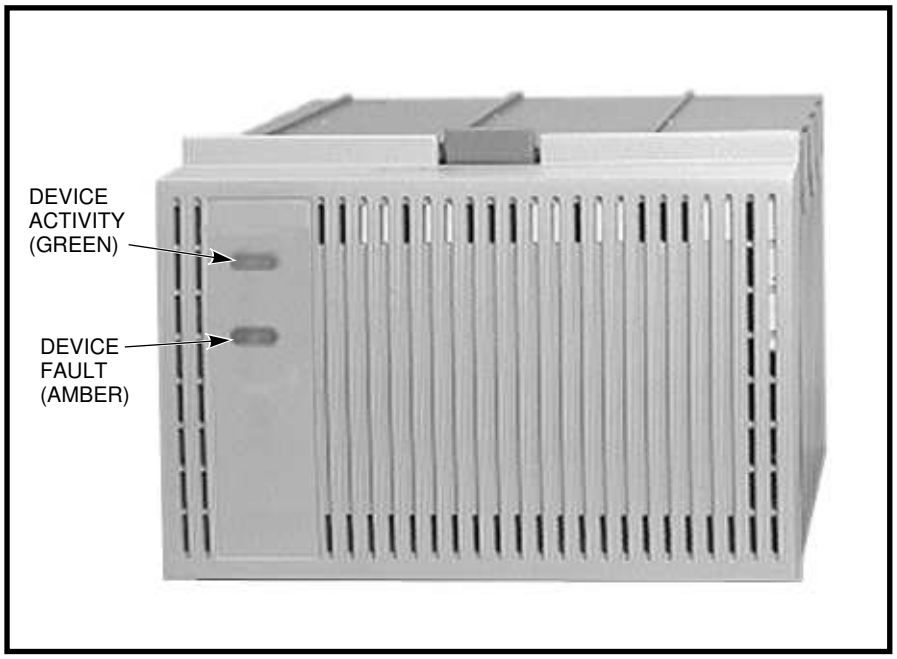

CXO-4308A-PH

A 3½-inch SBB occupies one slot in a BA350–SB SBB shelf. Three slots are required to house 5¼-inch SBBs.

The currently supported cabinets that house HS array controllers, options, and devices are the SW800-series data center cabinets, the SW500-series cabinets, or the SW300-series deskside RAID enclosure cabinets. Refer to the following documents for information about these cabinets:

- *StorageWorks SW800-Series Data Center Cabinet Installation and User's Guide*
- *StorageWorks SW500-Series Cabinet Installation and User's Guide*
- *StorageWorks SW800-Series Data Center Cabinet Cable Distribution Unit Installation Sheet*
- *StorageWorks SW500-Series Cabinet Cable Distribution Unit Installation Sheet*
- *StorageWorks Solutions SW300-Series RAID Enclosure Installation and User's Guide*

1.10.1 Controller Shelf

An HS array controller is mounted in a controller shelf, like the one shown in Figure 1–7, which is configured for dual-redundancy. The controller shelf holds a maximum of two controller modules, two cache modules, and two shelf power supplies. The standard orientation of the controller shelf in an SW800-series data center cabinet is in a vertical position (not in a horizontal position as shown in Figure 1–7). The controller shelf is mounted horizontally in the SW500-series cabinet and the SW300-series deskside enclosure shelf.

Figure 1–7 Controller Shelf with a Dual-Redundant HSJ40 Array Controller Configuration

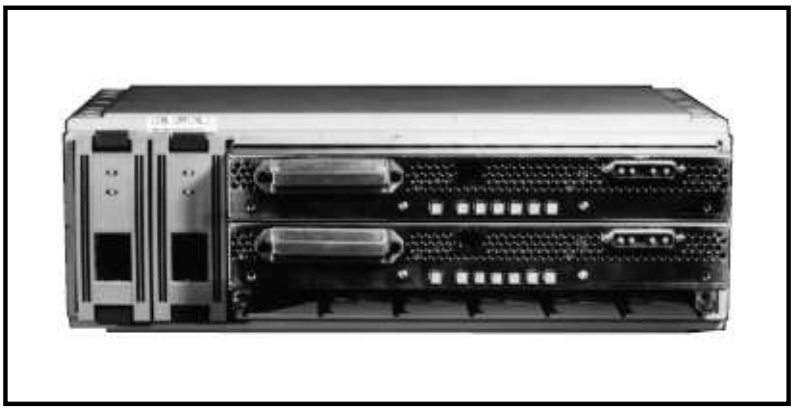

CXO-3660A-PH

Note

In a dual-redundant controller configuration with the controller shelf mounted vertically in the front of an SW800-series data center cabinet, or horizontally in a SW500-series cabinet, the controller closest to the SCSI–2 device cables is ID #6; the one farthest from the device cables is ID #7. In a nonredundant HS array controller configuration (one controller mounted in the controller shelf), the controller must be installed in the slot farthest from the SCSI–2 device cables (ID #7).

1.10.2 BA350–SB SBB Shelf

A BA350–SB[5] SBB shelf can hold a maximum of eight 3½-inch SBB devices. Each SBB slides into a shelf position called a **slot**. The slots are numbered 0 through 7, from right to left (with the shelf mounted horizontally). Depending on configuration restrictions, six (or seven) single-ended, eight-bit, SCSI–2 devices and one or two power supplies can be installed in one BA350–SB SBB shelf.

Figure 1–8 shows a fully populated BA350–SB SBB shelf with seven devices and one power supply. The primary power supply resides in slot 7, and the secondary power supply or battery backup unit must reside in slot 6 (if not occupied by a storage device).

Details for configuring BA350–SB SBB shelves can be found in the *StorageWorks Solutions Shelf and SBB User's Guide* and the *StorageWorks Solutions Configuration Guide*.

The SCSI–2 address of a 3½-inch disk device in a BA350–SB SBB shelf is determined by its physical position in the SBB shelf. For 3½-inch tape SBBs and 5¼-inch devices, addresses are determined by address switches on the device or by the slot location depending on where the switch setting on the device is set. Not all devices have address switches.

[5] The BA350–SB SBB shelf is a direct replacement for the BA350–SA SBB shelf. The BA350–SB shelf can be used in either an FCC Class A or Class B environment.

Figure 1–8 BA350–SB Fully Populated SBB Shelf

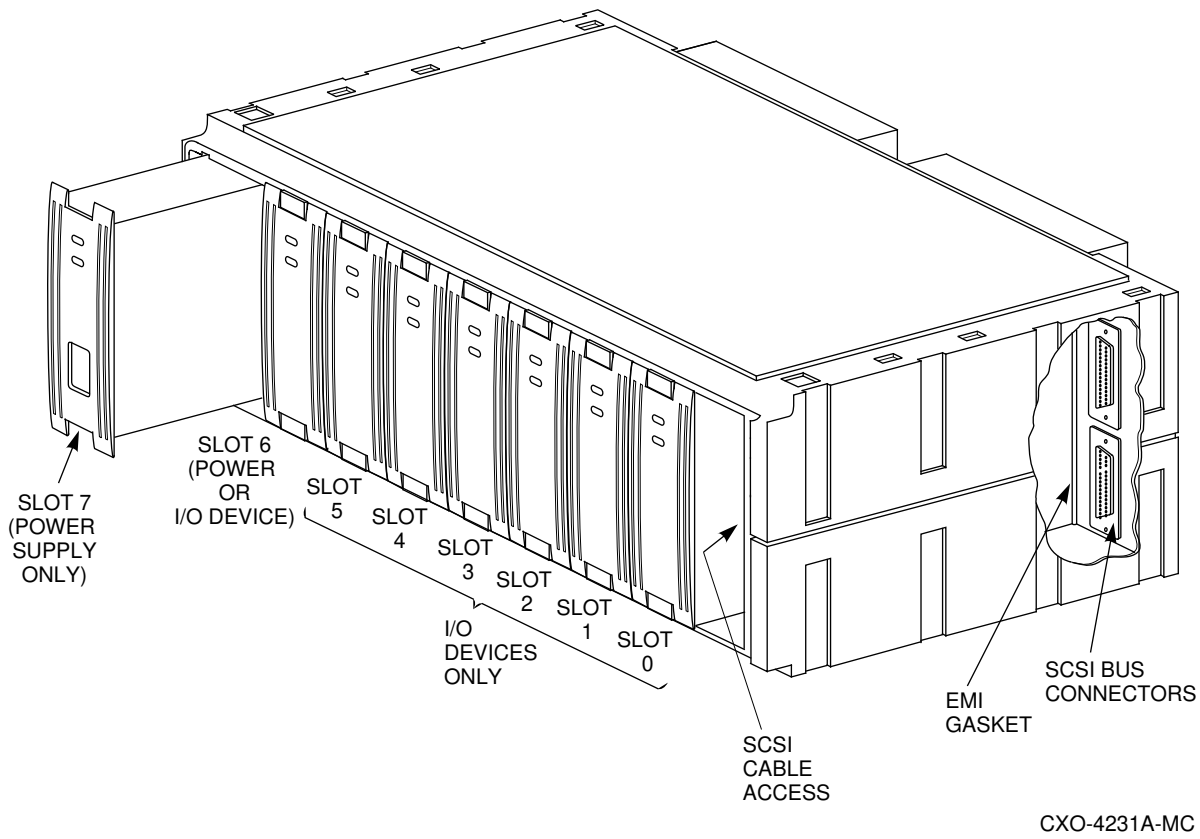

1.11 MSCP and TMSCP Protocols (to Hosts)

The CI and DSSI interfaces use MSCP and TMSCP as the storage protocols to access HSJ and HSD30 controller-attached SCSI–2 devices. MSCP and TMSCP are high-level storage protocols used by many Digital storage subsystem products.

1.12 SCSI Protocol (to Hosts)

The SCSI interface uses the SCSI protocol for a host to access LUNs (logical units) attached to the HSZ array controller (SCSI target as seen by the host). The HSZ array controller supports tagged command queuing and full LUN support. SCSI supports up to eight LUNs per target (for which one HSZ array controller can be assigned from one to four SCSI target IDs, or a dual-redundant pair can be assigned up to four SCSI target IDs that they share).

1.13 SCSI Protocol (to Devices)

The HS array controllers use SCSI–2 protocol to communicate between the controller and the attached SCSI–2 devices.

2
Controller Technical Description

The following sections present brief overviews of HS array controller hardware and firmware functionality.

2.1 HS Array Controller Hardware Functional Overview

Each HS array controller provides connections to a host computer and an array of storage devices connected by SCSI–2 buses. A second controller also may be interconnected in a redundant arrangement called a **dual-redundant** configuration, where both controllers reside in the same controller shelf. Maintenance terminals can be connected to each controller through a **modified modular jack (MMJ)** located on the front bezel of each controller. An EIA–423 compatible terminal, **VAXcluster console system (VCS)**, or serial line must be used. Restrictions may apply to some controller models for VCS support.

The HS array controller hardware consists of the following:

- Policy processor hardware
- Instruction/data cache (32-KB SRAM cache)
- Shared memory (8 MB)
- Bus exchangers
- CI, DSSI, or SCSI–2 host interface (host port)
- SCSI–2 interfaces (device ports)
- Optional read cache or write-back cache module
- Operator control panel (OCP)
- Program card (PCMCIA)
- Nonvolatile memory 32-KB SRAM (NVMEM)
- Maintenance terminal port with MMJ connector
- Dual controller communication port
- RAID assist hardware

Figure 2–1 is a functional block diagram for HS array controllers. The host interface block in this figure is controller specific. There are three to six SCSI–2 device ports depending on the controller model (the block diagram shows six ports).

Figure 2–1 HS Array Controller Functional Block Diagram

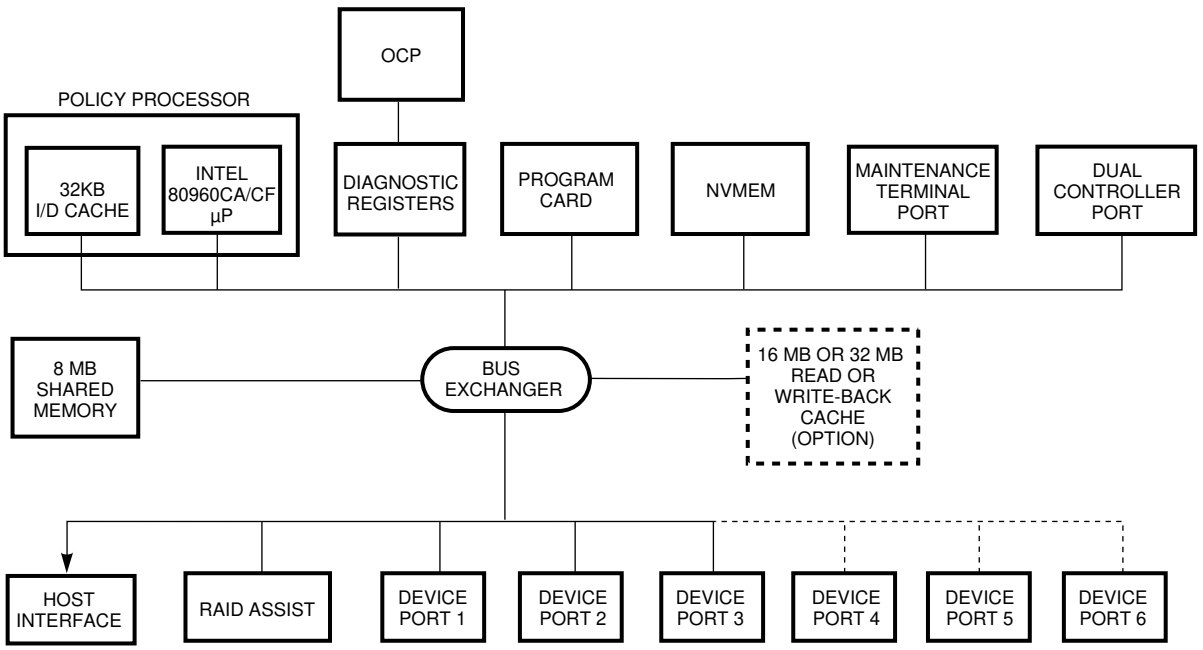

2.1.1 Policy Processor Hardware

The policy processor hardware runs the controller firmware loaded from the program card, and controls all but the low-level device and host port operations.

Shared Memory

Shared memory consists of a gate array controller and associated buffer memory. This memory is shared between bus devices and contains data structures with data buffers. When no cache module is present with the controller, a portion of the controller module's shared memory is used during normal operation as a cache. When a read or write-back cache module is installed, the controller module's shared memory holds the cache module context for cache look-up operations.

Instruction/Data Cache

Although the processor chip has an internal cache, the internal cache is not large enough to offset performance degradation caused by shared memory. To compensate for this, the processor chip uses a separate instruction/data (I/D) cache. This 32-KB static RAM cache helps the processor chip achieve faster access to instructions and variables that are in immediate use. A write-through cache design maintains data coherency in the I/D cache.

2.1.2 Bus Exchangers

The bus exchange devices allow high-speed communication between bus devices and shared memory. The bus exchangers allow all of the pieces of the controller to operate together. One bus exchange device handles the address lines, while the other one handles the data lines.

2.1.3 CI, DSSI, or SCSI–2 Interfaces (Host Ports)

A CI, DSSI, or SCSI–2 interface allows direct memory access of data between the host port and shared memory. Setup and maintenance of the host port is done by the policy processor hardware.

2.1.4 SCSI–2 Device Ports (Buses)

The SCSI–2 device ports for the controllers are implemented using SCSI–2 port processor chips performing 8-bit operations in normal or FAST mode. The port processors execute scripts read from shared memory and under control of the policy processor. Each SCSI–2 port can have up to six (or seven)[1] SCSI–2 devices.

2.1.5 Read Cache Module

The read cache used with HS array controllers reduces the controller's latency and may increase I/O's per second. During normal operations, a read operation from the host either accesses data currently in the controller's cache or obtains the requested data from a disk.

If a host read operation is a cache ''hit'' (data is already contained in the read cache), the data is supplied back to the host immediately, thereby improving the I/O performance by reducing latency.

If the host read operation is a cache ''miss'' (data is not in the read cache), the controller accesses the appropriate disk to satisfy the request. The controller then reads the data, returns it to the host, and writes it to the cache.

For host write operations, data is written to the cache *and* the disk. This write-through caching improves the performance of subsequent reads of data previously written.

Cache transfer sizes have a maximum size of 64 KB (128 logical blocks). Read caching is enabled by default with 16 KB (32 logical blocks maximum transfer size), and can be optionally enabled or disabled using the CLI SET *unit-number* command. These cache parameters can be varied on a per unit basis.

Transfers that are larger than the maximum size (or 64 KB, whichever is smaller) are not cached. This prevents large transfers from flushing the cache.

The replacement algorithm implemented is a basic least recently used (LRU) replacement algorithm. When the cache is full and new data must be written to the cache, the LRU algorithm removes the oldest resident cached data with the least frequent references and replaces it with the new data.

2.1.6 Write-Back Cache Module

The write-back cache used with HS array controllers may increase subsystem performance, and it preserves data integrity under power failure situations.

For write-back caching, data is not always written to storage and cache simultaneously, as it is for write-through caching. Instead, data intended for storage may remain in the cache until the optimum time to write, or **flush**, to a device occurs. When data is held in this way it is referred to as **unwritten cached data**. A power failure in conjunction with unwritten cached data can have disastrous consequences if the information is lost. In RAID configurations,

[1] A dual-redundant 6-port controller configuration supports 36 devices (a 3-port dual-redundant controller supports 18 devices). Lower availability configurations can support up to 42 devices (7 per SCSI–2 port) with a 6-port controller, and up 21 devices with a 3-port controller, but this will sacrifice a convenient upgrade to any of the possible higher availability options, such as redundant power.

the impact of power failure is worsened by the possibility of **write hole** data loss as well.

For this reason, the write-back cache differs from the read cache by incorporating onboard rechargeable batteries. The batteries power the memory (to retain data) when cache power is intentionally or accidentally interrupted. The battery circuit automatically detects loss of power and switches from shelf backplane power to battery power.

2.1.6.1 Battery Discharging

During a power failure, the write-back cache batteries discharge very slowly, providing standby power to retain cached data. Under these circumstances, data retention time for fully-charged batteries is guaranteed up to 100 hours. Data may be lost if power is off for more than 100 hours (when starting with fully charged batteries).

Studies performed by utility companies have noted that over 99 percent of all power outages last less than 1 minute. However, once power fails for more than 3 minutes (with a 32-MB write-back cache) or 5 minutes (with a 16-MB write-back cache), the controller will modify its operation upon restart as follows, in order to maximize data preservation:

1. Non-RAID, disk-based units with write-back caching enabled will be accessed in write-through (read cache) mode until the cache batteries are fully recharged. Once the batteries are recharged, write-back caching will resume.

2. RAIDsets and mirrorsets, which under power failure situations may create a **write hole**, cannot be served until the batteries are fully recharged if the CACHE_POLICY=A qualifier is set. HSJ- and HSD30-based RAIDsets will go ‘‘OFFLINE/INOPERATIVE’’ to the host until fully charged batteries are available. An HSZ-based RAIDset’s LUN will appear to the host as ‘‘SCSI LUN NOT READY’’ until fully charged batteries are available. Cached data is immediately flushed to the disk devices even while the batteries are recharging.

CACHE_POLICY= A or B

For the HSOF V2.5 release, new cache policy qualifiers are available for the SET THIS_CONTROLLER and SET OTHER_CONTROLLER commands. These qualifiers are called CACHE_POLICY=A and CACHE_POLICY=B.

If CACHE_POLICY=A is set, RAIDsets and mirrorsets are protected as previously described in item 2.

If CACHE_POLICY=B is set, RAIDsets and mirrorsets are available in write-though mode when write-back cache modules have low batteries. It is important to note that if you choose to set CACHE_POLICY=B, data is lost if the batteries fail (unless an uninterruptable power supply (UPS) is used to keep the power turned on). Changing the policy on one controller in a dual-redundant controller configuration automatically changes it on the other controller. The change takes place immediately.

When possible, single cache battery failures will cause HSJ- and HSD30-based RAIDsets and mirrorsets to fail over to the companion cache in a dual-redundant configuration provided the other cache's batteries are fully charged.[2] Although this feature will not help during power outages (because both controllers will be down), it keeps your RAIDsets and mirrorsets online if, for example, one battery is faulty.

HSZ array controller RAIDsets and mirrorsets will *not* failover to the other controller in the event of a battery failure. However, in the event that one controller module fails, all units will fail over to the other controller in the pair.

If a unit begins to report inoperative or lost data after a battery has transitioned from low to good, reinitialize the controller to properly reset the unit's state. This situation can occur when the second controller of a dual-redundant pair initializes with unflushed data in its cache while the surviving controller has a low battery condition.

2.1.6.2 Battery Charging

Under normal conditions, a battery charge circuit senses the battery voltage and automatically activates a charger to achieve and maintain full battery charge. The relationship of power down time versus battery recharge time is given by the following two ratios:

16-MB write-back cache—24:1 (power down time versus time to fully charge)
32-MB write-back cache—12:1

For example, a 2 hour power outage will result in approximately 10 minutes of recharge time for a 32-MB write-back cache module. The recharge time is a safety precaution, taken to preserve the integrity of the controller subsystem for any and all power outages that may occur thereafter.

If for some reason your batteries are not fully charged when you receive your subsystem, they will begin charging when the controller is powered on. If the batteries have been fully discharged, it can take up to 6 hours for them to become fully charged and ready to support RAIDsets and mirrorsets. Enter the SHOW THIS_CONTROLLER or SHOW OTHER_CONTROLLER command to check the status of your batteries.

Note

Digital recommends that you have your write-back cache batteries replaced at 5 year intervals.

Refer to the *StorageWorks Array Controllers HS Family of Array Controllers Service Manual* for instructions for removing or replacing write-back cache module batteries.

If for some reason your batteries are not fully charged when you receive your subsystem, they will begin charging when the controller is powered on.

Note

If the batteries have been fully discharged, it can take up to 6 hours for them to become fully charged and ready to support RAIDsets and mirrorsets. Enter the SHOW THIS_CONTROLLER or

[2] Nonredundant configurations will by definition not have access to this option.

SHOW OTHER_CONTROLLER command to check the status of your batteries.

See Section 4.10 for information on how to upgrade your cache module option from a read to write-back cache module (or from 16-MB to 32-MB write-back cache module).

The battery circuit automatically detects loss of backplane power and switches from backplane +5V power to battery power. This transition occurs when the backplane supply drops to approximately +4.65V +/- .05V, providing adequate time to switch to the battery power before the supply voltage drops below +4.5V, the minimum voltage for the write-back cache module DRAMS.

The battery charge circuit senses the battery voltage and automatically activates the charger as needed to achieve and maintain full battery charge. The battery charger is powered from the backplane +12V supply and a switch-mode topology is used. Battery charge time from a fully discharged condition is 10 hours maximum.

Minimum data retention time when operating from fully charged batteries is estimated to be greater than 100 hours, based on an estimated total load of less than 40 mA at +5V on the batteries. Digital supports data retention up to, but not greater than 100 hours with fully charged batteries. You may lose your data if you run on battery power for more than 100 hours.

If a power failure occurs, and the write-cache module batteries are used, when the power is restored the firmware checks the status of the battery charge at 4 minute intervals.

2.1.7 Operator Control Panel

The operator control panel (OCP) LEDs reflect the state of the controller and the external bus. The green OCP LED is reserved for controller status, and the amber LEDs are reserved for the SCSI–2 port (bus) information. When a fault condition occurs, the OCP LEDs indicate a fault code. If a controller has ceased functioning, the green LED (reset) is lit continuously.

The controller can be reset/restarted (if needed) by pressing the reset (//) button on the OCP.

The following sections briefly describe the physical appearance of the operator control panels for HSJ30, HSJ40, HSD30, and HSZ array controllers.

2.1.7.1 HSJ40 and HSJ30 Array Controller OCP

Figure 2–2 shows the OCP on an HSJ40 array controller's front bezel and the location of the program card slot.

Figure 2–2 HSJ40 Array Controller OCP and Program Card Locations

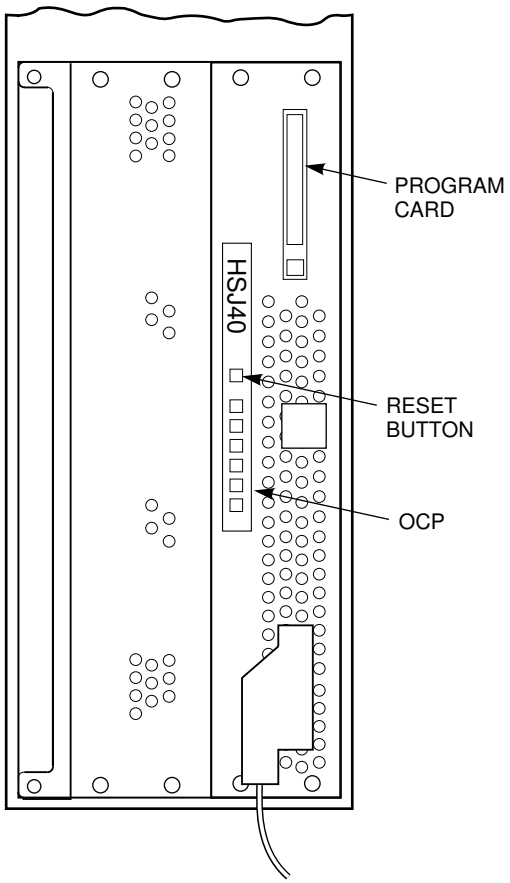

The OCP for the HSJ40 array controller has seven square plastic buttons with embedded LEDs. The HSJ30 array controller uses the same OCP, but only three of the six port buttons can be used functionally to quiesce a port. All six amber LEDs on the HSJ30 and HSJ40 array controller's OCPs report fault codes. Both controllers utilize the reset button.

The buttons and LEDs serve two functions. The green button resets/restarts the controller. The other amber buttons allow the port (associated with each button) to be *quiesced* when the button is pushed, allowing for a device warm-swap, thus decreasing subsystem down time. The OCP is sometimes referred to as the bus quiesce panel.

2.1.7.2 HSD30 Array Controller OCP

The OCP for the HSD30 array controller has one button with an embedded green LED for the reset button, and three recessed port buttons. There are six amber port LEDs located directly to the left (for vertically mounted controllers) of the port buttons. The LEDs are located under the port buttons when the OCP is mounted horizontally.

The buttons and LEDs serve two functions. The green button resets/restarts the controller. The three recessed buttons allow the port (associated with each button) to be quiesced when the button is pushed, allowing for a device warm swap, thus decreasing subsystem down time. Use a pointed object to push the three recessed port buttons. Figure 2–3 shows an HSD30 array controller OCP.

Figure 2–3 HSD30 Array Controller Operator Control Panel

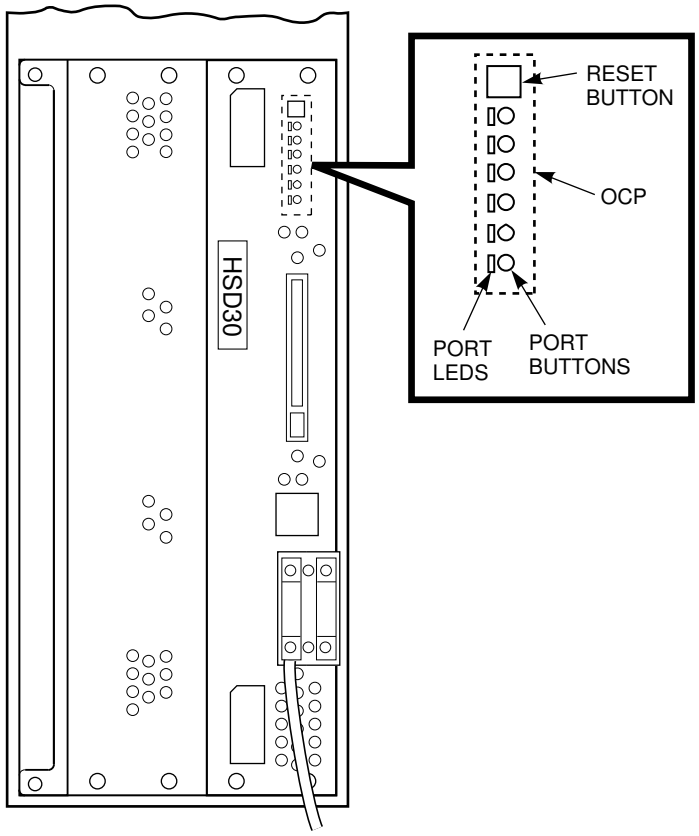

CXO-4360A-MC

2.1.7.3 HSZ Array Controller OCP

The operator control panel for the HSZ array controller has one button with an embedded green LED for the reset button, and six recessed port buttons. The six amber port LEDs for the associated port buttons are located directly to the left (for vertically mounted controllers) of the port buttons (as shown in Figure 2–4). The LEDs are located under the port buttons when the OCP is mounted horizontally.

Figure 2–4 HSZ40–B*x* Array Controller Operator Control Panel

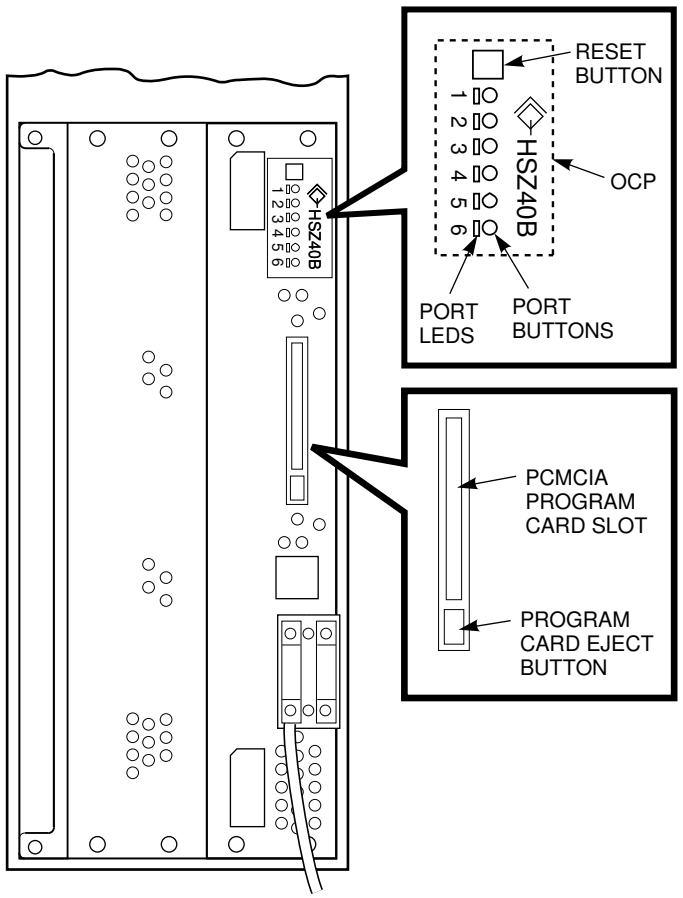

CXO-4204C-MC

The buttons and LEDs serve two functions. The green button resets/restarts the controller. The six recessed buttons allow the port (associated with each button) to be quiesced when the button is pushed, allowing for a device warm swap, thus decreasing subsystem down time. Use a pointed object to push any of the six recessed port buttons.

Note

The HSZ40–B*x* OCP maintenance terminal port connector is center-keyed. A short phone cable and coupler come with each controller to convert from a center-keyed to offset-keyed configuration as appropriate for your system. Look for the ‘‘HSZ40B’’ on the front bezel label.

2.1.8 Program Card (PCMCIA)

The program card is a PCMCIA standard program card device. After a set of minimum integrity diagnostics are complete, the controller firmware is copied from the program card to the first 2 MBs of shared memory in the controller using error correction code (ECC) to correct program card errors when possible. This occurs each time the controller initializes.

The program card must remain inserted with the ESD shield in place, whenever the controller is in operation. Removing the program card during operation causes the controller to go into a reset state. To recover from this state, push the program card back into place and press the controller's reset (//) button.

Figure 2–5 shows the program card location in a controller front bezel and its associated eject button.

Figure 2–5 HSJ Program Card and Eject Button Locations

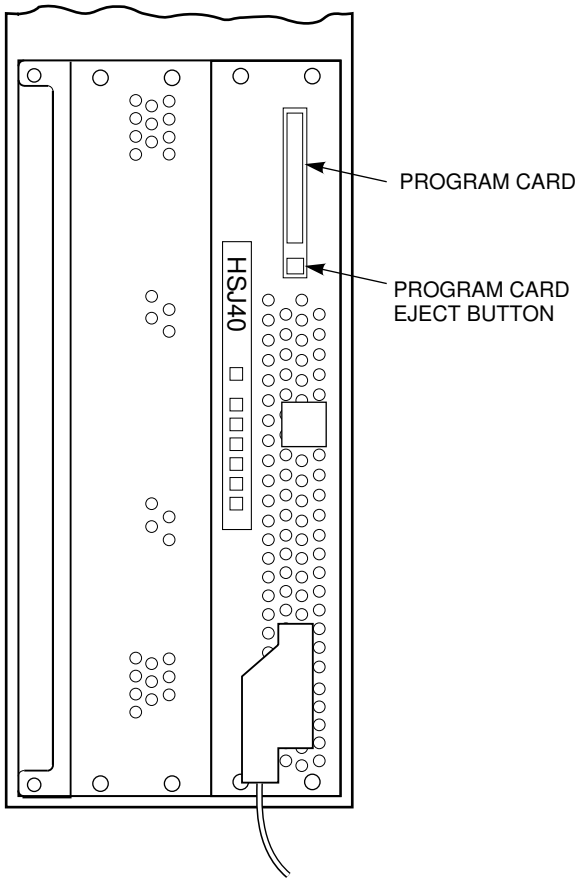

2.1.9 Nonvolatile Memory (NVMEM)

The HS array controller module has 32 KB of nonvolatile memory. This memory stores parameter information and assists with value-added functions.

2.1.10 Maintenance Terminal Port

The maintenance terminal port is used to plug in a maintenance terminal for setting the HS array controller's initial parameters.

Each array controller has an MMJ on its front bezel that supports EIA–423 compatible terminals. The MMJ connector is offset-keyed for HSJ, HSD30, and HSZ40–A*x* array controllers for use with DECconnect™ wiring.

Note

For HSZ40–B*x* array controllers, the MMJ connector is center-keyed (rather than offset-keyed) and ships with a short phone cable (Digital part number 17–03411–04) and a center-to-offset coupler (Digital part number 12–43346–01). These parts are used to convert from a center-keyed to offset-keyed maintenance terminal connector configuration.

A terminal is plugged into the MMJ connector during subsystem installation to set initial controller parameters. Either a maintenance terminal or a virtual terminal using a DUP connection can be used to add devices, storagesets, and so forth. **HSZ array controllers** use a virtual terminal connection using the HSZterm utility (instead of a DUP connection). See Figure 2–6 for the location of the MMJ (EIA–423) terminal port.

If a terminal is plugged into one controller in a dual-redundant configuration, and the controller is still functioning, you are able to communicate with the other controller in the dual-redundant pair through the dual controller port connection.

Figure 2–6 Location of the MMJ Maintenance Terminal Port for HSJ and HSD30 Array Controllers

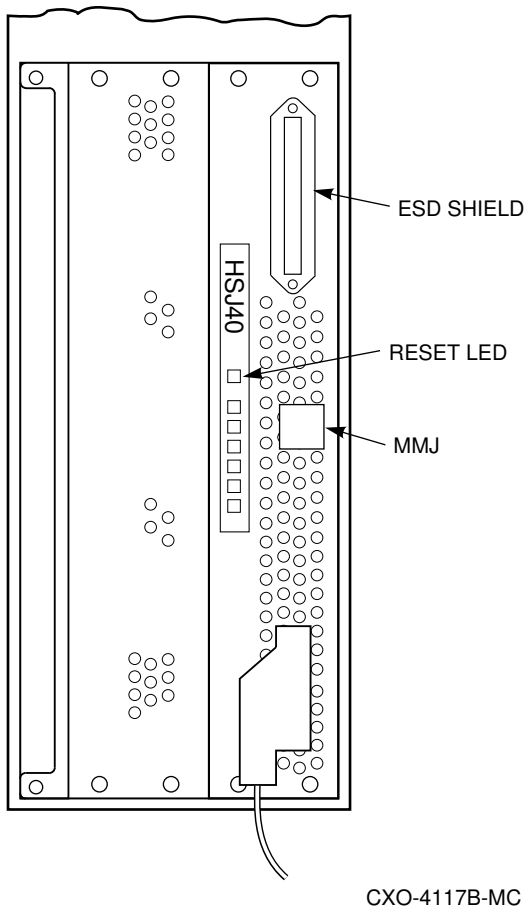

See Figure 2–7 for a visual representation of the HSZ40–B*x* array controller's short phone cable and center-to-offset key adapter.

Figure 2–7 Phone Cable and Center-to-Offset Coupler for HSZ40–B*x* Array Controller MMJ Maintenance Terminal Port

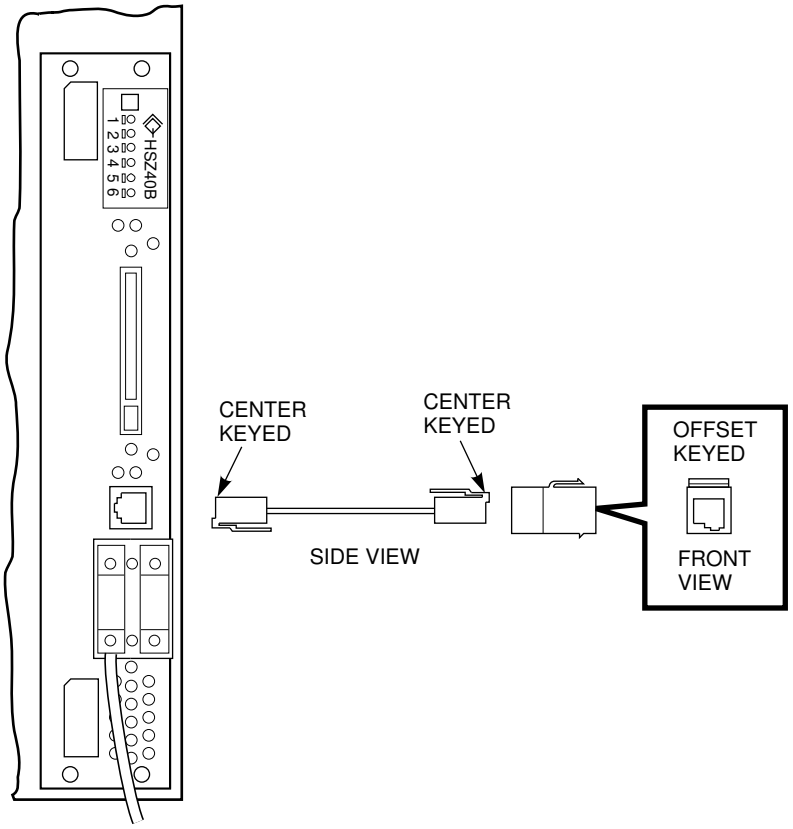

2.1.11 Dual Controller Port

The HSJ, HSD30, and HSZ array controllers have an internal **dual-controller port** that allows communication through the backplane with a second controller within the same controller shelf. This port is used in dual-redundant configurations allowing one controller to take over for the other controller should one controller fail. This process is called **failover**. During failover, the ''surviving'' controller assumes control of the SCSI–2 device ports and attached devices from the other (failed) controller. Refer to the failover sections in this chapter for a complete description of the failover processes for each controller model.

2.2 HS Array Controller Firmware Overview

The HS array controller firmware, called **Hierarchical Storage Operating Firmware (HSOF)**, consists of the following:

- Core functions—tests, diagnostics, and executive functions
- Host interconnect functions—supports host interconnect protocols

- Operator interface and subsystem management functions—command line interpreter (CLI), DUP support for HSJ and HSD30 array controllers, and HSZterm support for HSZ array controllers
- Local programs
- Error logging and fault management
- Device services functions—SCSI–2 port control firmware
- Value added functions—Data mapping, caching, state change, failover, storageset member management, and error recovery

Note

This chapter does not attempt to discuss every controller function or provide complete detail on every topic. For more information please refer to the *StorageWorks Array Controllers HS Family of Array Controllers Service Manual*.

2.2.1 Core Functions

HS operating firmware provides the following core functions:

- Test and diagnostics
- Executive functions

2.2.1.1 Controller Self-Test and Diagnostics

Controller self-test and diagnostics are performed at power-up and determine the go/nogo status of the controller subsystem. These self-tests include testing of the cache modules.

Self-test is fault tolerant with respect to the following:

- It removes bad spots in cache memory from further use.
- SCSI–2 ports—Up to five ports (for HSJ40 or HSZ array controllers) or two ports (for HSJ30 or HSD30 array controllers) can be bad, and the controller will still initialize.
- Half or all of the cache can be bad, and the controllers will still initialize.

2.2.1.2 Executive Functions

Firmware executive functions act as the operating environment kernel for the HS array controllers. EXEC functions are common among the different controller models. EXEC functions control firmware execution with respect to interrupts, thread control, queuing support, timers, and so forth.

2.2.2 Host Interconnect Functions

The three different host interconnections supported by the HS operating firmware are CI, DSSI, and SCSI. The following protocols are used between the host and each HS array controller model:

- **Computer Interconnect (CI) for HSJ Array Controllers**

  System Communication Services (SCS)
  Mass Storage Control Protocol (MSCP)
  Tape Mass Storage Control Protocol (TMSCP)
  Diagnostic Utility Protocol (DUP)

- **Digital Storage System Interconnect (DSSI) for HSD30 Array Controllers**

  System Communication Services (SCS)
  Mass Storage Control Protocol (MSCP)
  Tape Mass Storage Control Protocol (TMSCP)
  Diagnostic Utility Protocol (DUP)

- **Small Computer System Interface (SCSI) for HSZ Array Controllers**

  SCSI–2 protocol with **tagged command queuing** and vendor-unique diagnostic pages (for communication with the controller CLI).

2.2.3 Operator Interface and Subsystem Management Functions

The operator interface and subsystem management functions support the user interface, subsystem management, subsystem verification, and error logging fault management. These functions are described in the following sections.

2.2.3.1 Command Line Interpreter

The controller's command line interpreter is the primary user interface for the controller. The CLI contains firmware for controlling most management functions plus local program execution.

2.2.3.2 Diagnostic Utility Protocol

The DUP connection between the controller and the host is supported over the CI bus for HSJ array controllers and the DSSI bus for HSD30 array controllers. DUP allows you to access the CLI and local programs through a remote host ''virtual'' terminal in much the same way as using a maintenance terminal.

2.2.3.3 HSZ Array Controller Virtual Terminal Connection

For HSZ array controllers, a virtual terminal port connection can be created using a host-based application called the HSZterm utility. This application uses SCSI diagnostic send/receive commands to deliver and receive characters to/from the HSZ array controller CLI and local programs.

2.2.3.4 Local Programs

The following are local programs available for controller subsystem management and verification:

- DILX and TILX internal disk and tape exercisers for SCSI–2 disk and tape drives
- VTDPY user display for current controller state and performance data
- C_SWAP for controller and cache module warm swap (for dual-redundant configurations)
- FLS for enabling and disabling licensed features
- CFMENU for configuring storage devices, storagesets, and units
- Code Patch for firmware changes and repairs
- Code Load for writing new firmware onto the PCMCIA card for HSZ40–B*x* array controllers
- FMU for displaying controller last failure information and controlling the display of spontaneous events
- CONFIG for adding new devices that are not currently in the configuration

- CLONE utility for making block-for-block copies of a single device, mirrorset, or striped mirrorset

2.2.3.5 Error Logging and Fault Management

Error logging and fault management collects system errors in a central location and sends the error information to the host.

2.2.4 Device Services

SCSI–2 device service firmware includes device port drivers and physical device addressing and access algorithms. Device services consist of normal functions such as read and write, as well as error recovery code. It also monitors and controls storage shelf and storage device LEDs, power, and cabinet blowers. Specific functions include the following:

- SCSI–2 device control (8 bit, single-ended normal or FAST synchronous mode).
- Tagged command queuing for SCSI–2 devices.
- Disk and tape drive connection on the same controller port (includes optical devices and tape loaders) for HSJ and HSD30 array controllers. (You may see a decrease in performance for the disks on a port during large tape operations for that port's tape devices.)

Note

Tape drives, loaders, optical drives and CD–ROMs are not currently supported for HSZ array controllers.

- Read and write physical device addressing and access.
- Device warm swap support
- Storage shelf and storage device observation and control
- Command disk support to allow ''jukeboxes'' and other generic SCSI–2 devices to be attached to MSCP-based hosts. HSOF Version 2.5 supports multiple LUNs on HSJ and HSD30 array controllers to allow automatic tape loading on supported tape loader models. Refer to HSOF Version 2.5 HSJ or HSD30 release notes for information regarding supported models.

2.2.5 Value-Added Functions

The controller's firmware contains value-added functions to enhance basic availability, performance, subsystem management and maintenance, and connectivity. Specific functions include the following:

- **Availability functions:**

  Failover capability for all host interfaces is available in dual-redundant array controller configurations.

- **Performance functions:**

  Performance of the controller is enhanced by read or write-back caching.

- **Subsystem management and maintenance functions:**

  Controller maintainability is enhanced by controller/cache warm swap support.

- **Connectivity functions:**

  A second controller can be connected to a single controller configuration to allow failover support of attached devices in the event of a controller failure. This is called a dual-redundant configuration.

  EIA–423 compatible terminals can be connected to each controller's maintenance terminal port. A VAXcluster™ console system (VCS) or serial interface also can be connected to the maintenance terminal port for maintenance and installation.

- **RAID level 0, 1, 0 & 1, 3, and 5 functionality** is supported and is described in Chapter 6 of this manual.

2.3 What Is Failover?

The following sections describe what failover is and how it works. For more information about the SET FAILOVER and SET NOFAILOVER commands, see Appendix B.

Failover is the firmware process that takes place when one HS controller fails in a dual-redundant controller configuration. In a failover (dual-redundant) configuration, information is shared between the two controllers, such as:

- Storageset names (for example, mirrorsets, RAIDsets, and stripesets)
- Actual device configuration (PTL descriptions) and the association to named storagesets
- Logical unit definitions

Note

Both HSZ array controllers in a dual-redundant pair ''know about'' each other's SCSI target IDs, but do not *share* them.

For HSJ and HSD30 array controllers: Prior to failover, all resources are considered available to both controllers until a logical device is brought online by a host through one of the controllers. At this point, all containers used by the logical device become solely accessible through the one controller.

For HSZ array controllers: Prior to failover, resources are always accessible only to a particular controller because the controller is a SCSI target of the host, and LUNs must be visible through a single target ID. This is true whether or not a unit is currently interacting with the host.

In a failover configuration, all commands are shared between the two controllers with the exception of the following commands:

```
SET THIS_CONTROLLER
SET OTHER_CONTROLLER
SHOW THIS_CONTROLLER
SHOW OTHER_CONTROLLER
RESTART THIS_CONTROLLER
RESTART OTHER_CONTROLLER
SHUTDOWN THIS_CONTROLLER
SHUTDOWN OTHER_CONTROLLER
CLEAR INVALID_CACHE THIS_CONTROLLER
CLEAR INVALID_CACHE OTHER_CONTROLLER
```

In these cases, the command is directed to the correct controller:

- THIS_CONTROLLER refers to the controller to which the terminal is connected or which is the target of the virtual terminal connection.
- OTHER_CONTROLLER refers to the other controller in the dual-redundant pair.

Note

Devices, stripesets, RAIDsets, and mirrorsets are defined as **containers**. All changes in container configuration are automatically communicated between the two controllers.

2.3.1 Setting Failover

To place both controllers into a failover configuration, enter the following command:

```
CLI> SET FAILOVER COPY=configuration-source
```

Where *configuration-source* is either THIS_CONTROLLER or OTHER_CONTROLLER, depending on where the ''good'' copy of configuration information is located.

CAUTION

Whenever you add a *new* controller to an existing controller to form a dual-redundant pair, enter initial parameters such as MAX_NODES, controller ID or SCSI target IDs, SCS node names and allocation classes, (as appropriate for your controller model), *before* entering the SET FAILOVER command. This eliminates problems in case your new controller module's ID is set to the same ID as another member in the cluster.

DIGITAL recommends that the controllers be set for failover *before* any device configuration commands are entered (for example, ADD DISK, ADD UNIT, or ADD RAIDset). Then, as devices, storagesets, and units are added to one controller's configuration, they are automatically added to the other controller's configuration.

IMPORTANT: Given two *unconfigured* controllers, it is possible to fully configure one controller, then enter the SET FAILOVER command. However, if the ''wrong'' controller is specified after the COPY= qualifier, all device configuration information will be *lost*. *Never* blindly specify SET FAILOVER. Always know where your ''good'' configuration information is located.

Due to the amount of information that must be passed between the two controllers, the SET FAILOVER command may take up to 1 minute to complete.

When setting dual-redundant controllers for failover, make sure the target controller (the controller you are copying the configuration to) has no cache errors or unwritten cache data. Delete any remaining, configured units on the target controller to verify there are no cache errors before entering the SET FAILOVER command. Deleting units from the target controller will not create problems

because, after setting failover, you will not be accessing those units anyway. (The target controller will only access the copied units.)

See Section 5.2.5 for a detailed description for setting configuration parameters for dual-redundant configurations.

HSZ Array Controllers: Observe the following considerations when setting dual-redundant HSZ array controllers for failover:

- Subsystem performance will be better if you balance the assignment of target IDs across your dual-redundant pair.
- The controller you are copying configuration information to will automatically restart after entering the SET FAILOVER command.
- You MUST connect both controllers to the same host SCSI–2 bus. If you connect the controllers in a dual-redundant pair to different host buses, and one controller fails, the subsequent failover process will cause adverse effects on your system.

2.3.2 Exiting Failover

If you want to take two controllers out of the failover configuration and both controllers are still functioning, you must enter the following command:

```
CLI> SET NOFAILOVER
```

The OTHER controller will shut down when this command is issued.

2.3.3 Taking Controllers Out of Failover

After one controller in your dual-redundant pair has failed, the surviving controller services your entire configuration. To take the surviving controller out of the failover configuration, enter the following command:

```
CLI> SET NOFAILOVER
```

You must consider the following before entering the SET NOFAILOVER command on a surviving controller:

- You do not need to SET NOFAILOVER, *unless* you must make configuration changes before you can replace the failed controller.
- If the surviving controller and its cache module are functioning normally, you can SET NOFAILOVER without special preparation.
- If the surviving controller is running with low write-back cache batteries (enter the SHOW THIS_CONTROLLER command to check battery status), you should replace/recharge the batteries before entering SET NOFAILOVER and before removing the failed controller's cache module.

Entering SET NOFAILOVER removes the surviving controller from the failover configuration. You may now make the configuration changes under the surviving controller. Always SET NOFAILOVER *before* deleting any units, storagesets, or single devices.

In a dual-redundant configuration, both controllers have copies of the same configuration information. Even if you configure disk drives, tape drives, storagesets, and units after entering the SET FAILOVER command, the configuration information will be communicated to the second controller when it is returned to service and the controllers are restored to a dual-redundant configuration.

Failover should normally complete in less than 10 seconds. If drive I/O is in progress at the time of failure, the surviving controller must reset any SCSI–2 buses with outstanding I/O.

Whenever you need to revive the controller that was disabled, you must enter the following command from a terminal connected to the functioning controller:

```
CLI> RESTART OTHER_CONTROLLER
```

Then, press the reset (//) button to initialize the controller to be revived.

2.3.4 Using Failover Commands When Write-Back Cache Is in Use

Failover commands can be used while write-back caching is enabled provided the following restrictions are observed:

- When setting dual-redundant controllers for failover, make sure the target controller (the controller you are copying configuration data to) has no cache errors or unwritten cached data. Delete any units on the target controller to verify there are no cache errors, *before* entering the SET FAILOVER command.
- Do not take a dual-redundant controller pair out of failover (SET NOFAILOVER) with unwritten cached data present in the write-back cache modules. Doing so will destroy data. Use the SHOW THIS_CONTROLLER and the SHOW OTHER_CONTROLLER commands to confirm that cache data has been written. Refer to Section 6.4 for more about unwanted unwritten cache data in the write-back cache module.

2.3.5 Resolving a Configuration Mismatch after a Hardware Mismatch

The controller configuration is stored in nonvolatile memory on the controller module. Therefore, when one controller module is substituted for another (as might occur when replacing a failed controller), the new module's configuration contents will not match that of the surviving running controller. When the replaced controller is restarted, the configuration discrepancy is detected and a suitable error message is reported.

When a configuration mismatch is detected, the restarted controller will not recognize or access any devices. It is essentially disabled until the configurations are made the same.

To resolve a configuration mismatch, enter the following command on the surviving controller (configuration source) with the known good configuration:

```
CLI> SET FAILOVER COPY= THIS_CONTROLLER
```

This will copy the known good configuration to the newly restarted other controller.

Configuration mismatch also can occur when a subsystem that has never been configured is started for the first time. The two controller nonvolatile memories can contain different configurations left over from their last use.

To resolve a mismatch when neither controller contains a known good configuration, examine the two available configurations, chose one, and issue the SET FAILOVER COPY=THIS_CONTROLLER command to that controller to replicate the configuration on the other (the maintenance terminal must be plugged into the controller with the good configuration information).

2.4 HSZ Array Controller Failover Operation

The HSZ array controller uses a transparent failover operation in which the transfer of storage subsystem control occurs in a manner transparent to the host.

Two HSZ array controller modules installed in a StorageWorks controller shelf and connected to the same host SCSI–2 bus operate as a redundant pair with transparent failover. Figure 2–8 shows two controllers connected in this manner. Each controller may be configured to have multiple SCSI target IDs. A nonredundant (single) controller may have up to four IDs. A dual-redundant controller configuration may also have up to four IDs in any combination between the two controllers.

In normal operation, each controller services only the targets it has been assigned. In a failover situation, the surviving controller services all of the targets from both controllers. Each target in any of these configurations supports up to eight LUNs.

2.4.1 Transparent Controller Failover Resulting from a Fault

Once dual-redundant controllers establish a communications link in a normally operating array controller storage subsystem, they maintain the link with periodic status checks. If one controller fails, the other controller senses the situation and begins the failover operation.

The sensing controller's first action is to assert a KILL signal, locking the failing controller out of any further subsystem control. Once a controller asserts this signal, it cannot be disabled by the companion controller. In the event that both array controllers assert the KILL signal (as each senses a bad UART connection, for example), the first controller to assert the signal gains control of the subsystem.

In normal operation, each controller keeps a record of the entire subsystem configuration. When a failure occurs, the surviving controller can then take over control of its companion's cache module and storage devices (this process is called failover).

Note

RAIDsets, mirrorsets, and stripesets do not fail over for HSZ dual-redundant controller configurations individually: all RAIDsets failover together as the surviving controller takes over the relevant SCSI target IDs and associated LUNs.

Note that the failover operation takes place at the controller level, in a manner completely transparent to the host. As long as the redundant controllers reside on the same SCSI–2 bus, the host is not required to be actively involved. The transparent failover process is implemented in the HSZ array controller as a simulated power fail situation.

Figure 2–8 Dual-Redundant Controller Configuration

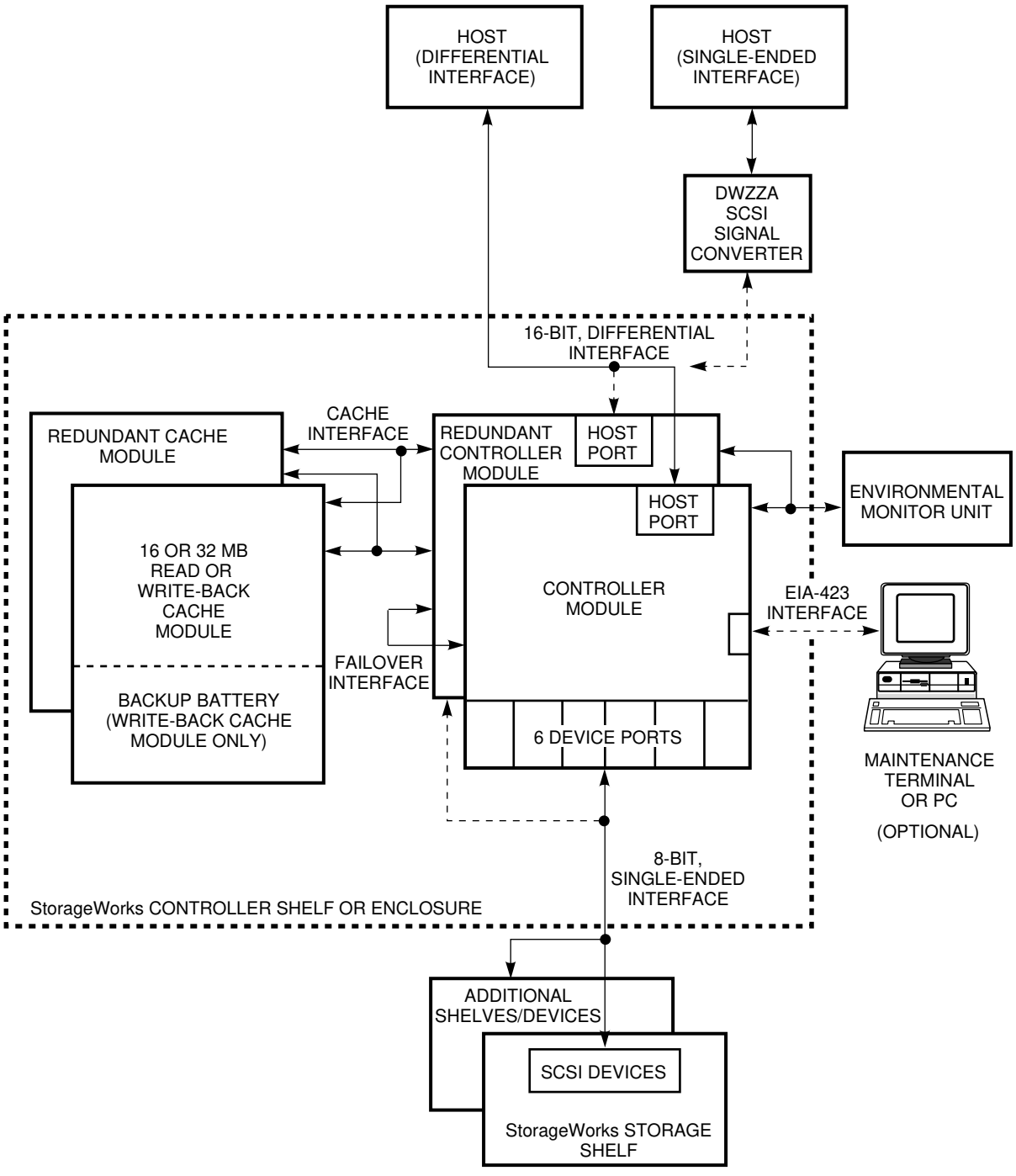

The failover action appears to the host as a power failure, in which there is a complete subsystem reinitialization, and one controller begins servicing all of the targets of both of the original controllers. The simulated power fail situation consumes a large amount of time with respect to normal host activity, and any outstanding host requests to the failed controller normally time out. When the

host reinitiates such requests, the surviving controller services them. The time out of the host's requests is the only indication to the host that a fault of some kind has occurred.

The surviving controller continues to monitor the status of the failed controller until it is restarted or replaced by the user. Once the failed controller is replaced and its replacement reestablishes communication with the surviving controller, the failback operation begins, returning subsystem control to the replacement controller for its SCSI targets.

2.4.2 Transparent Controller Failover Resulting from Operator Action

You can initiate a failover operation by running the C_SWAP local program from the CLI interface, for the purposes of swapping a controller or cache module. The C_SWAP program forces the controller on which it is executed to assume control over the entire storage subsystem.

3

Configuration Rules and Restrictions

This chapter describes configuration rules and restrictions for standard and nonstandard (customized) HS array controller subsystems. When specific rules and restrictions are not provided, references are given to the proper StorageWorks documentation.

Note

Configuration rules and restrictions apply to all HS array controller platforms (HSJ30, HSJ40, HSD30, HSZ40–A*x*, and HSZ40–B*x* array controllers) unless stated otherwise.

3.1 Ordering Considerations

Digital provides the following configuration approaches for ordering HS array controller subsystems:

- Preconfigured (packaged) systems (standard starter subsystems)[1]
- Configure-to-order (CTO) systems (custom configurations)
- A combination of preconfigured and CTO systems

Refer to Appendix A for a list of preconfigured controller subsystem option numbers. Not all controller models have preconfigured subsystem option numbers. Your Digital sales representative can assist you with order numbers.

3.2 Cabinets

The following sections present information to consider when loading BA350-series controller and storage shelves in SW800-series **data center cabinets** and SW500-series cabinets. The design of the SW300-series deskside RAID enclosure is such that the single controller/storage shelf and its cabling are internal and fixed. Configuring shelves into an SW300-series cabinet essentially is not required.

Note

In the loading sequence illustrations in this chapter, the designator ‘‘S’’ indicates a BA350–SB storage shelf and the designator ‘‘C’’ indicates a BA350–MA controller shelf.

[1] Preconfigured subsystems include a range of solutions for various capacities, performance levels, and availability.

3.2.1 SW800-Series Data Center Cabinet

This section describes the rules that apply to controller subsystem configurations in SW800-series data center cabinets. Figure 3–1 shows the loading sequence for storage and controller shelves (without tape drives) in an SW800-series data center cabinet. Refer to the *StorageWorks SW800-Series Data Center Cabinet Installation and User's Guide* for new loading sequence illustrations for cabinets using 4 GB or larger disk drives.

Figure 3–1 SW800-Series Data Center Cabinet Loading Sequence with No Tape Positions

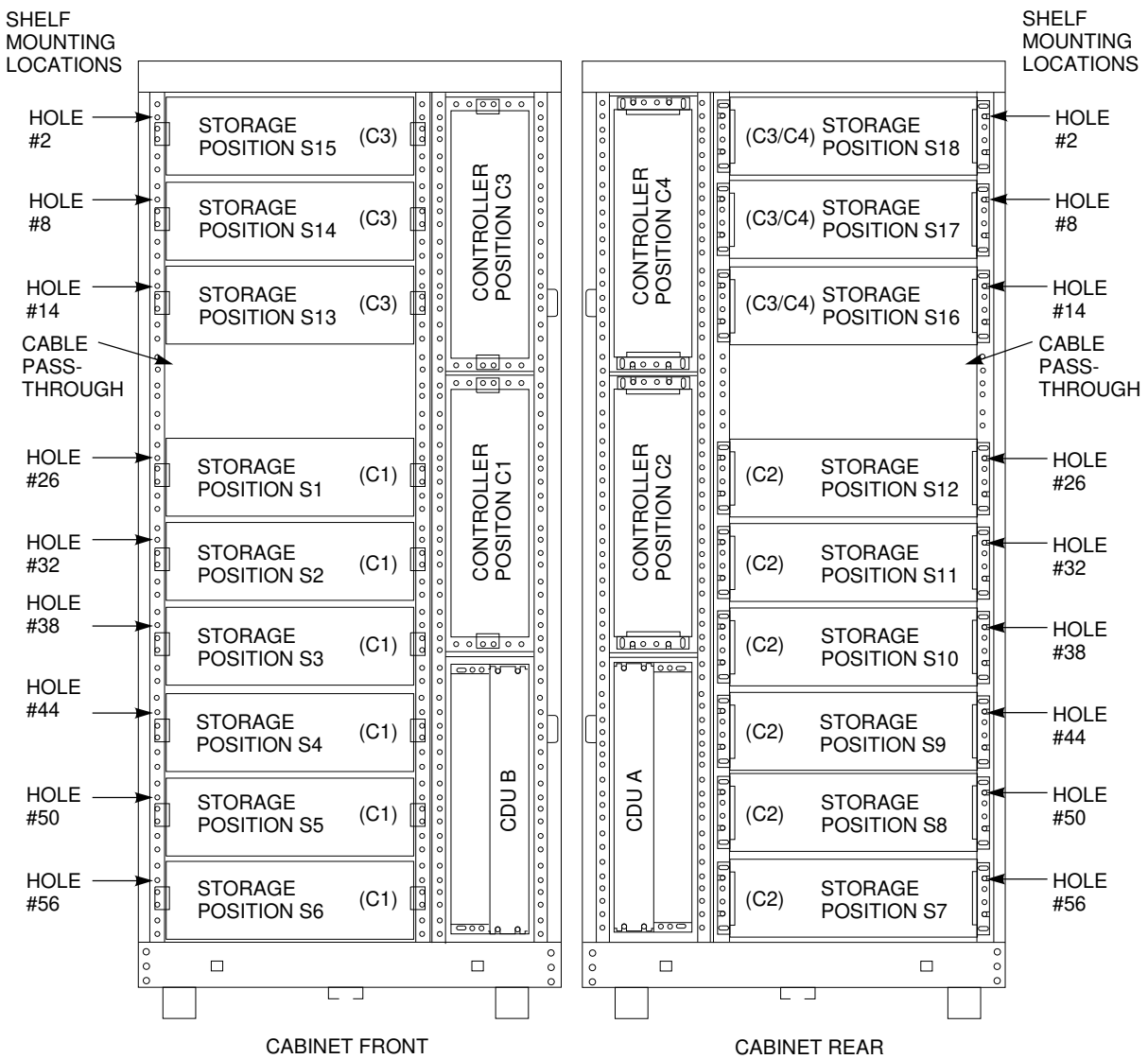

The following rules apply to subsystem configurations in SW800-series data center cabinets:

- A standard of three (or four) BA350–MA shelves connected to 18 BA350–SB shelves in a single SW800-series data center cabinet is suggested.

- Two storage shelves per port (jumpered-pairs)—Two BA350–SB shelves can be joined on the same controller port with the following restrictions:
  - The SCSI–2 cable to the first BA350–SB storage shelf is 1.0 meter or less. The associated BA350–MA controller shelf must be near enough to satisfy this restriction.
  - The SCSI–2 cable from the first BA350–SB shelf to the second shelf is 0.5 meters or less. This requires two shelves to be immediately adjacent to each other.
  - The first BA350–SB storage shelf is configured for unterminated single SCSI.
- Any TZ8*x*7 half-rack tape loader device must be located at the top front (each tape loader occupies the full cabinet depth) positions, filling the two or four top BA350–SB shelf positions (front and back). Up to four tape drive loader devices can be loaded in an SW800-series data center cabinet, displacing shelves S1 and S12 to S18 (leaving 10 BA350–SB shelves remaining).

  Figures 3–2 and 3–3 show the loading sequence for storage and controller shelves when two or four TZ8*xx*-series tape devices are installed in an SW800-series data center cabinet. Refer to the *StorageWorks SW800-Series Data Center Cabinet Installation and User's Guide* for new loading sequence illustrations for cabinets using 4 GB or larger disk drives.

  Single (or paired) TZ8*x*7 devices must be connected with a 0.2 meter (8-inch) SCSI–1-to-StorageWorks transition cable (order number 17–03831–01), then to a 2.0 meter SCSI–2 cable (order number BN21H–02) that connects to one of the controller's SCSI–2 ports.
- Using a fourth controller shelf: By convention, the third controller shelf (C3) would use (only) the top three (or four) storage shelves in the front of the cabinet; the fourth controller shelf (C4) would use the top three (or four) storage shelves in the back of the cabinet. (Refer to Figure 3–1.)
- Up to 42 devices can be attached, using seven 3½-inch SBBs in each of six BA350–SB shelves, attached to controllers with six controller ports.

Note

Redundant power or a dual-redundant controller configuration is not supported when using 42 devices. This is not a Digital recommended configuration.

Figure 3–2 SW800-Series Data Center Cabinet Loading Sequence with Two Tape Drive Positions

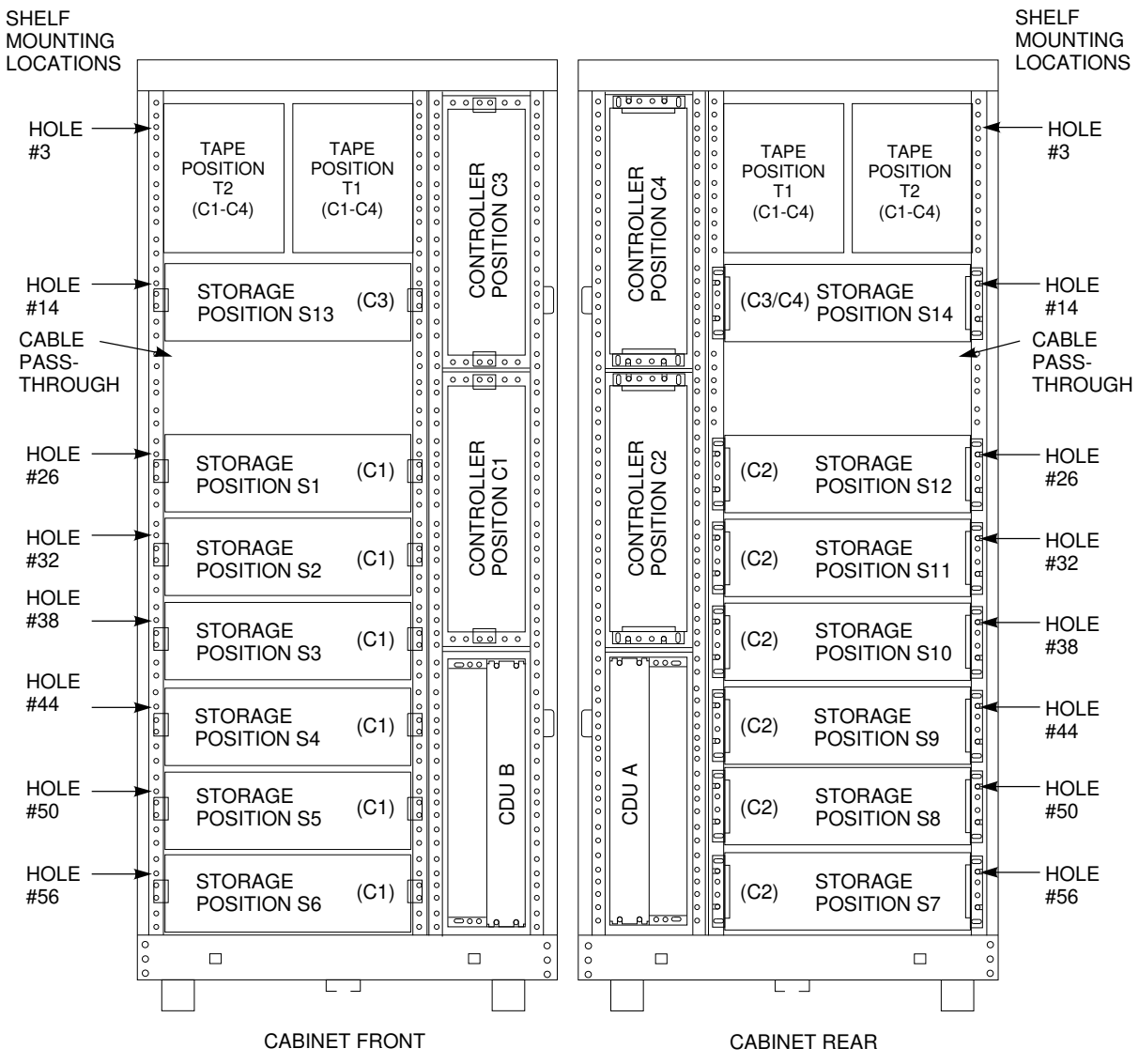

Figure 3–3 SW800-Series Data Center Cabinet Loading Sequence with Four Tape Drive Positions

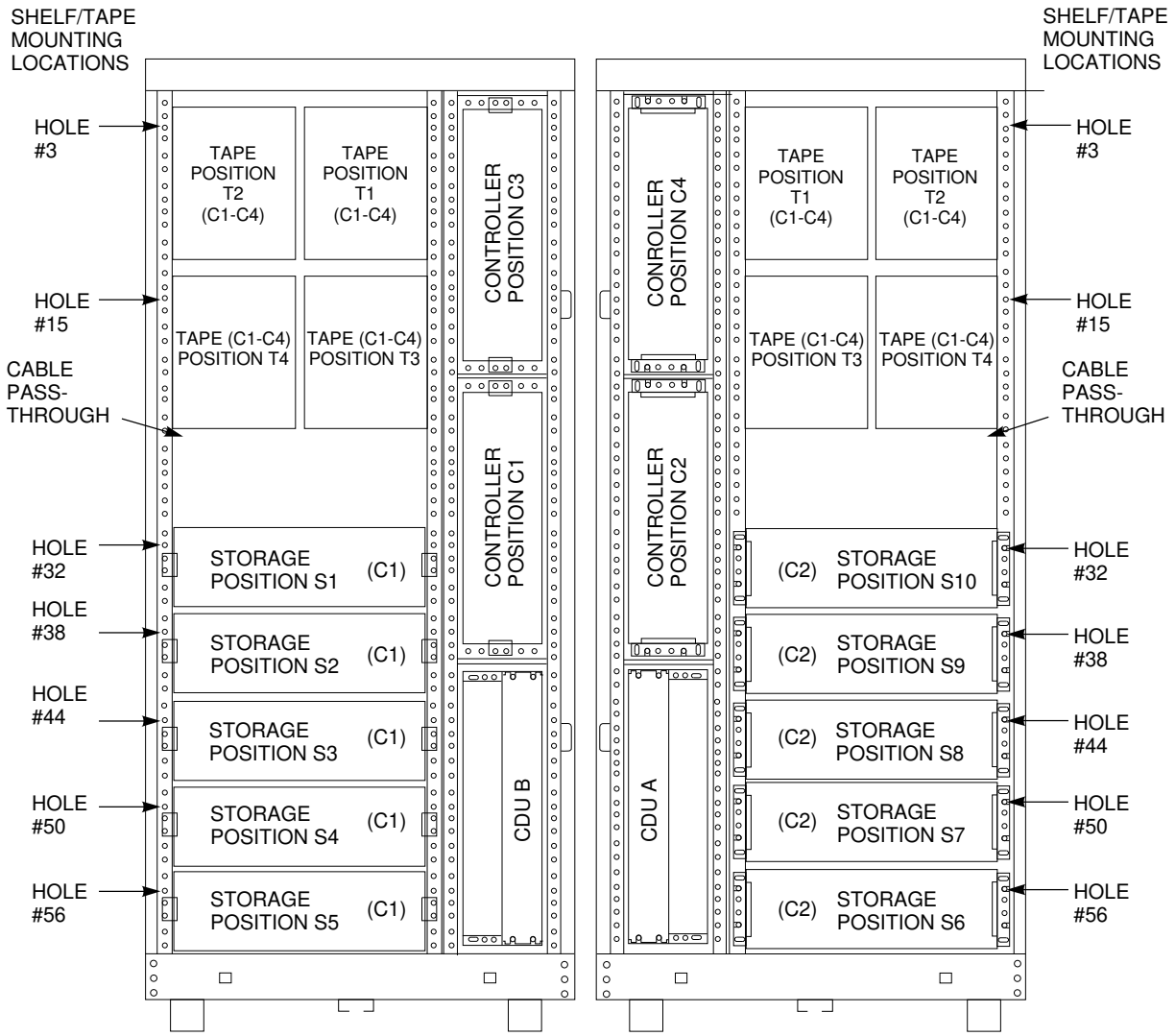

- Maximum number of storage shelves: Up to 18 horizontal BA350–SB storage shelves are allowed (16 if one or two TZ8*x*7 tape loaders are present). An earlier cabinet configuration had a provision for 19 horizontal storage shelves, however Digital no longer recommends that configuration.
- Vertical shelves are not used for storage shelves, because some devices require horizontal alignment. If desired, vertical shelf locations can be used for most disk drives. Refer to device-specific documentation for requirements. Any of the vertical shelves can be used, however Digital recommends that controller positions C4, then C3, be used first for storage shelves. (Refer to Figure 3–1.)
- The SW800-series cabinets do not accept SW300-series cabinet integrated controller/storage shelves at this time.

Refer to the *StorageWorks SW800-Series Data Center Cabinet Installation and User's Guide* for more details.

3.2.2 SW500-Series Cabinets

This section describes the rules that apply to controller subsystem configurations in SW500-series cabinets. Figure 3–4 shows the loading sequence for storage and controller shelves in an SW500-series cabinet. Refer to the *StorageWorks SW500-Series Cabinet Installation and User's Guide* for new loading sequence illustrations for cabinets using 4 GB or larger disk drives.

The following rules apply to controller subsystem configurations in an SW500-series cabinet:

- A standard of one BA350–MA controller shelf connected to six BA350–SB storage shelves in a single SW500-series cabinet is suggested.
- Two BA350–MA shelves can be housed with a maximum of four BA350–SB shelves each as two subsystems.
- Two storage shelves per port (jumpered pairs)—Two BA350–SB shelves can be joined on the same controller port with the following restrictions:
  - The SCSI–2 cable to the first BA350–SB storage shelf is 1.0 meter or less. The associated BA350–MA controller shelf must be located near enough to satisfy this restriction.
  - The SCSI–2 cable from the first BA350–SB shelf to the second shelf is 0.5 meters or less. This requires two shelves to be immediately adjacent to each other.
  - The first BA350–SB storage shelf is configured for unterminated single SCSI.
  - Controller shelf position C1 can be used with the pairs S1-S2 and S3-S4, and controller shelf position C2 can be used with the pair S8-S9, to satisfy the first restriction. Thus, a single subsystem (C1) can accommodate up to 16 5¼-inch SBBs.
- Any TZ8*x*7 half-rack tape loader must be located at the top front (each tape loader occupies the full cabinet depth) positions, filling the two top BA350–SB shelf positions (front and rear). Up to two tape drive loader devices can be loaded in an SW500-series cabinet, displacing shelves S4, S5, and S8-S9 (moving the **cable distribution units** (CDUs) to shelf location S8). Single (or paired) TZ8*x*7 devices must be connected (as in the SW800-series data center cabinet) to a controller port.

Figure 3–4 SW500-Series Cabinet Loading Sequence

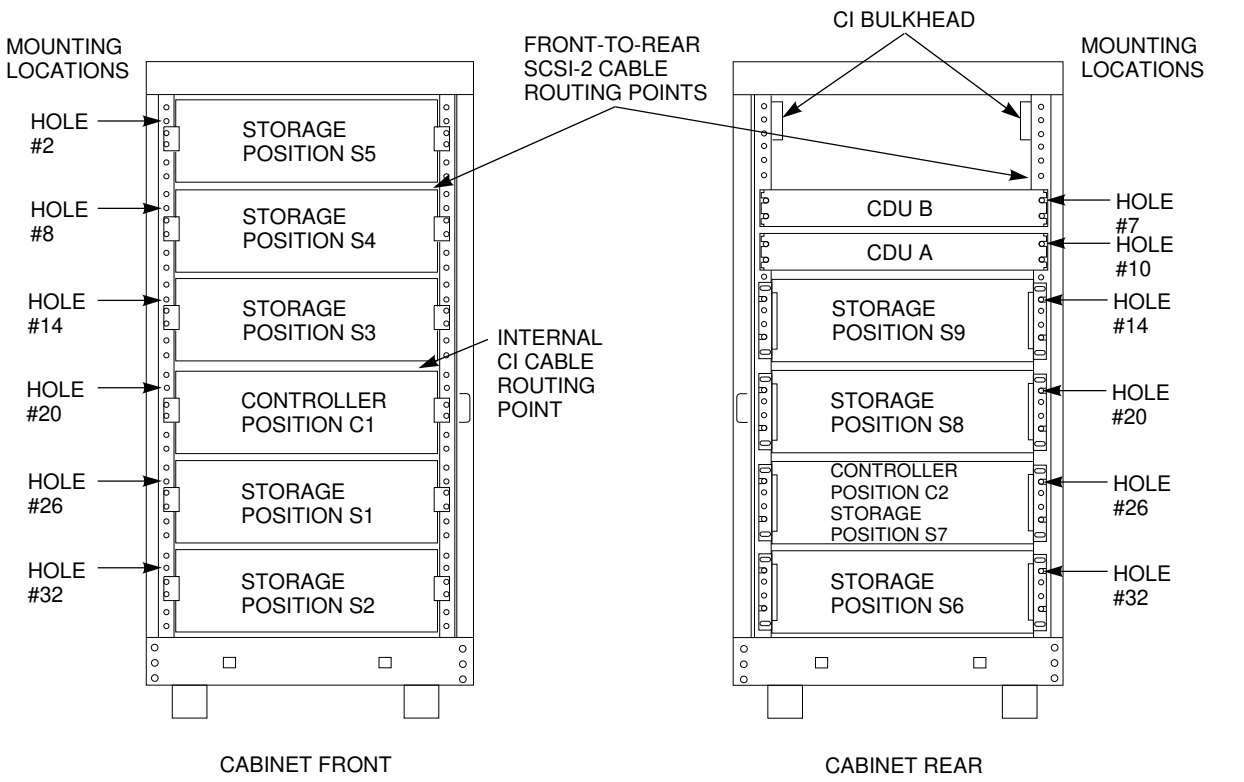

- Use of a second controller shelf: By convention, the first controller shelf (C1) would use S1-S5; the second controller shelf (C2) would use S6, S8, and S9. This permits two subsystems, one with up to 24-28 3½-inch SBB devices (in the front), and the other with 18-21 3½-inch SBB devices (in the rear).
- SW300-series cabinet shelves: The SW500-series cabinets do not accept SW300-series cabinet integrated controller/storage shelves.

Refer to the *StorageWorks SW500-Series Cabinet Installation and User's Guide* for more details.

Figure 3–5 shows the loading sequence for storage and controller shelves when TZ8*xx*-series tape devices are installed in an SW500-series cabinet. Refer to the *StorageWorks SW500-Series Cabinet Installation and User's Guide* for new loading sequence illustrations for cabinets using 4 GB or larger disk drives.

Figure 3–5 SW500-Series Controller/Storage Cabinet Shelf and Tape Drive Locations

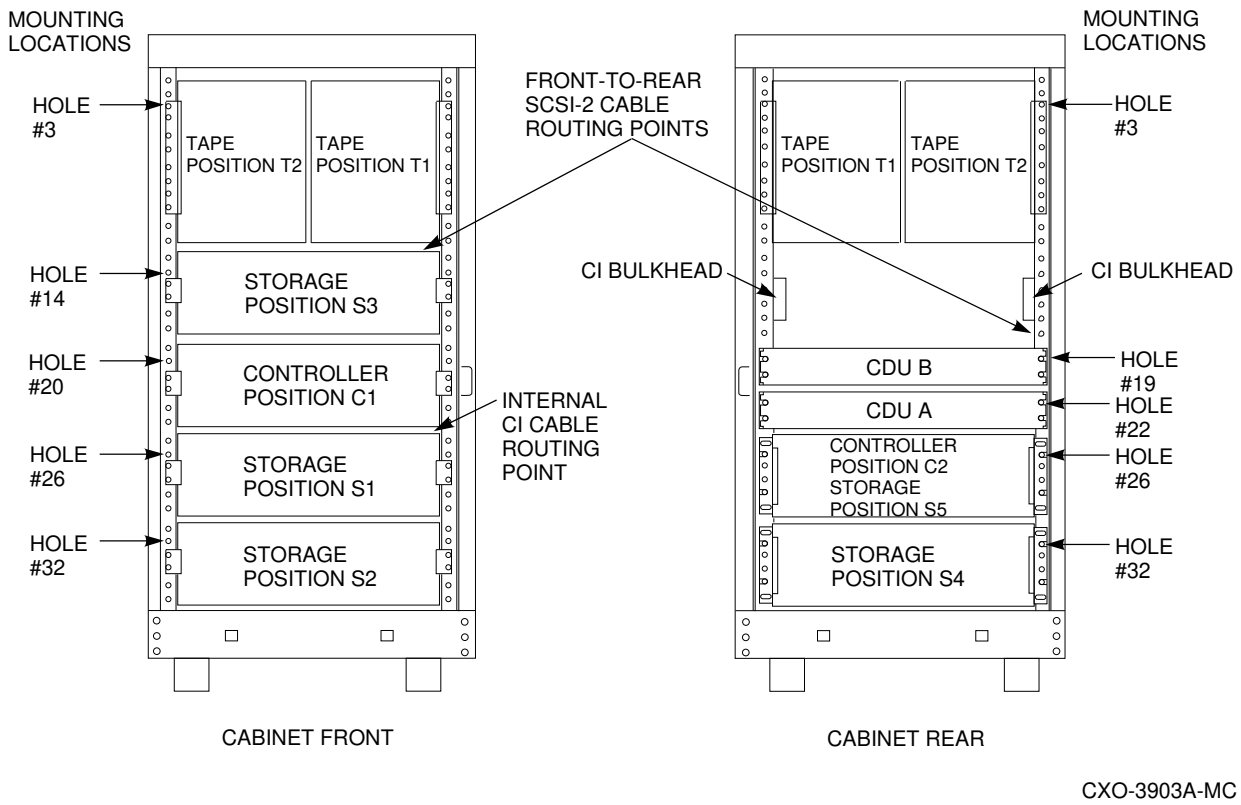

3.2.3 SW300-Series Deskside RAID Enclosure

The SW300-series cabinet, as shown in Figure 3–6, is a StorageWorks modular enclosure designed to hold one controller/storage shelf. The integrated design of the SW300 cabinet and its shelf virtually eliminates the need for complicated physical configuring by the operator.

The SW300-series cabinet does not accept the two BA350-series shelf types. Only the controller/storage shelf is supported at this time. See the *StorageWorks Solutions SW300-Series RAID Enclosure Installation and User's Guide* for more information on the SW300 deskside RAID enclosure.

Figure 3–6 SW300-Series Deskside RAID Enclosure

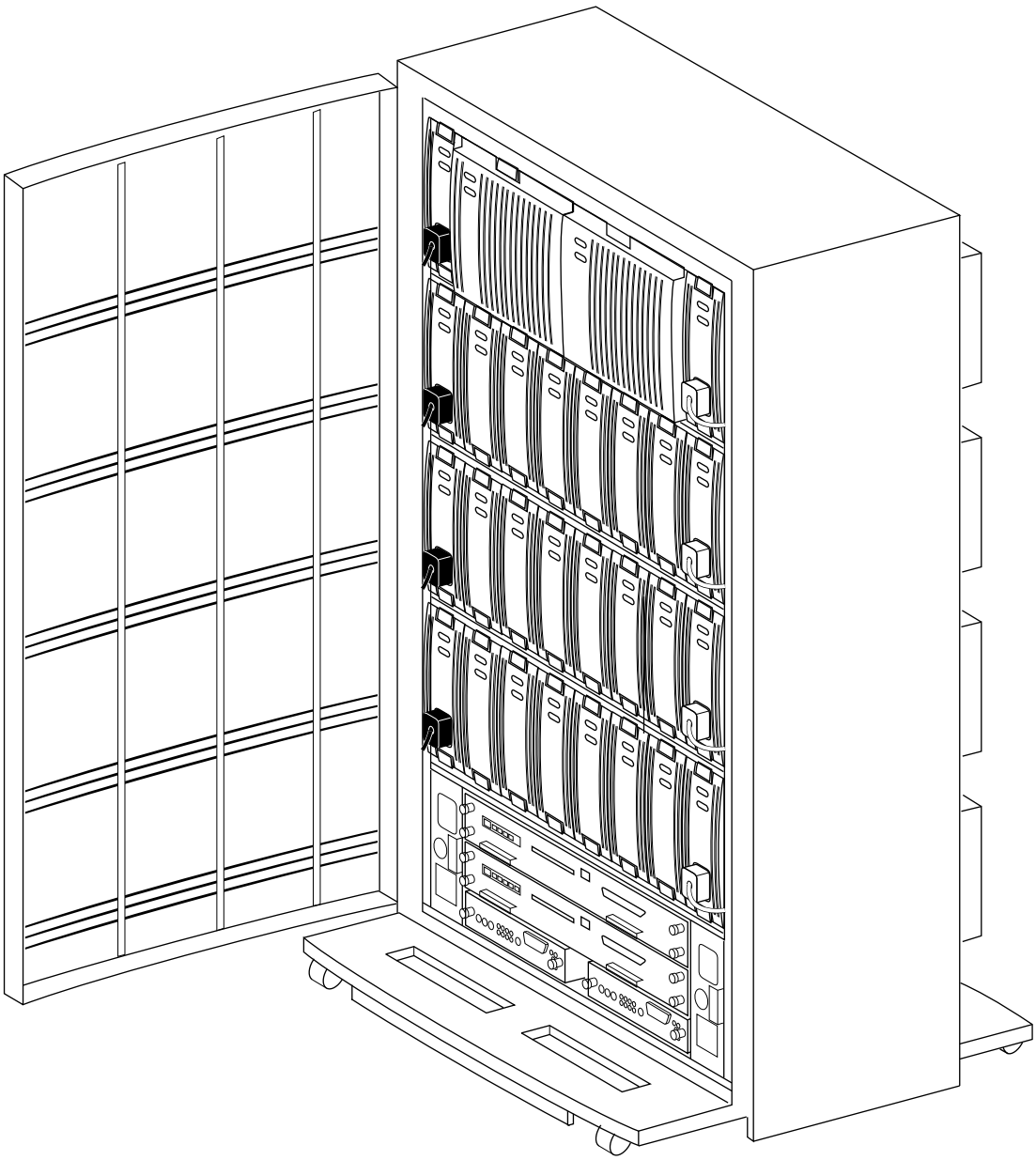

CXO-4268A-MC

3.2.4 Shelves

The following configuration rules apply to the arrangement of controller and storage shelves.

3.2.4.1 BA350-Series

BA350-series shelves can be arranged in any SCSI–2 legal configuration, subject to the following rules:

- No more than a single extension from one BA350–SB storage shelf is permitted. The two BA350–SB shelves must be physically adjacent to each other. Intermixing 5¼-inch SBBs and 3½-inch SBB is permitted per StorageWorks configuration rules. Figure 3–7 shows an example of storage shelves in a single extension configuration.
- Half-rack/full-depth devices, for example all TZ867 tapes, must be on their own port and cannot be connected as an extension from a BA350–SB shelf. Only two such devices can be configured per controller port, and those devices must be physically adjacent to each other at the top of the cabinet.

  Figure 3–8 is an example of two adjacent tape drives attached to a single port of the controller shelf.

Figure 3–7 Single Extension from Storage Shelf to Storage Shelf

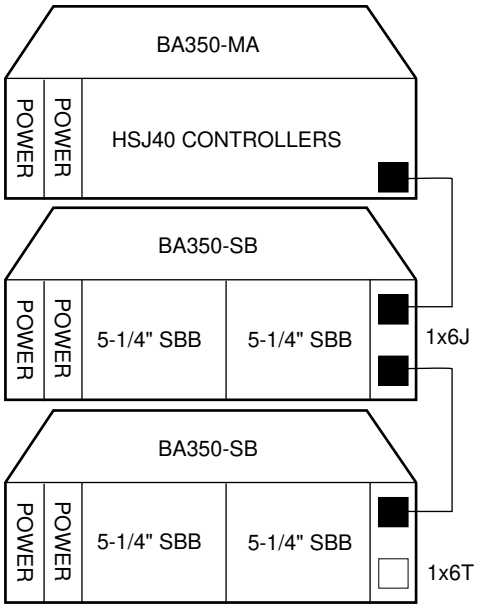

CXO-3750B-MC

Figure 3–8 Adjacent Devices on a Single Port

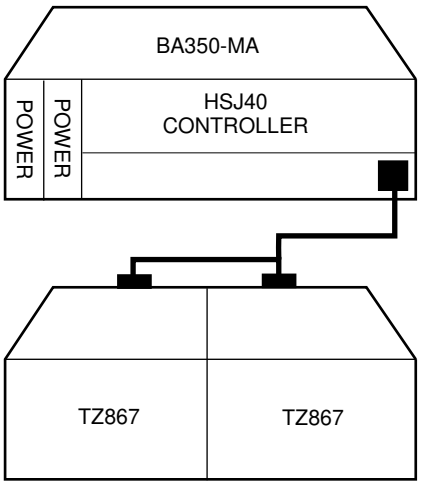

CXO-3751A-MC

- When using a 1.0 meter cable with a controller in the lower controller shelf position (C1) in the front of the SW800 or SW500 cabinet, all front-mounted shelves can be reached. The 2.0 meter cable reaches all shelves, but does not permit shelf jumpering. (Refer to Figure 3–1.)

Refer to the configuration rules listed in the *StorageWorks Solutions Shelf and SBB Configuration Guide* when using a BA350 subsystem shelf component.

3.2.4.2 SW300-Series Cabinet Shelf

The SW300-series cabinet shelf is an integrated controller and storage shelf. This shelf is standard width, but it is approximately the height of five BA350–SB storage shelves, as shown in Figure 3–9.

Figure 3–9 SW300-Series Cabinet Controller/Storage Shelf

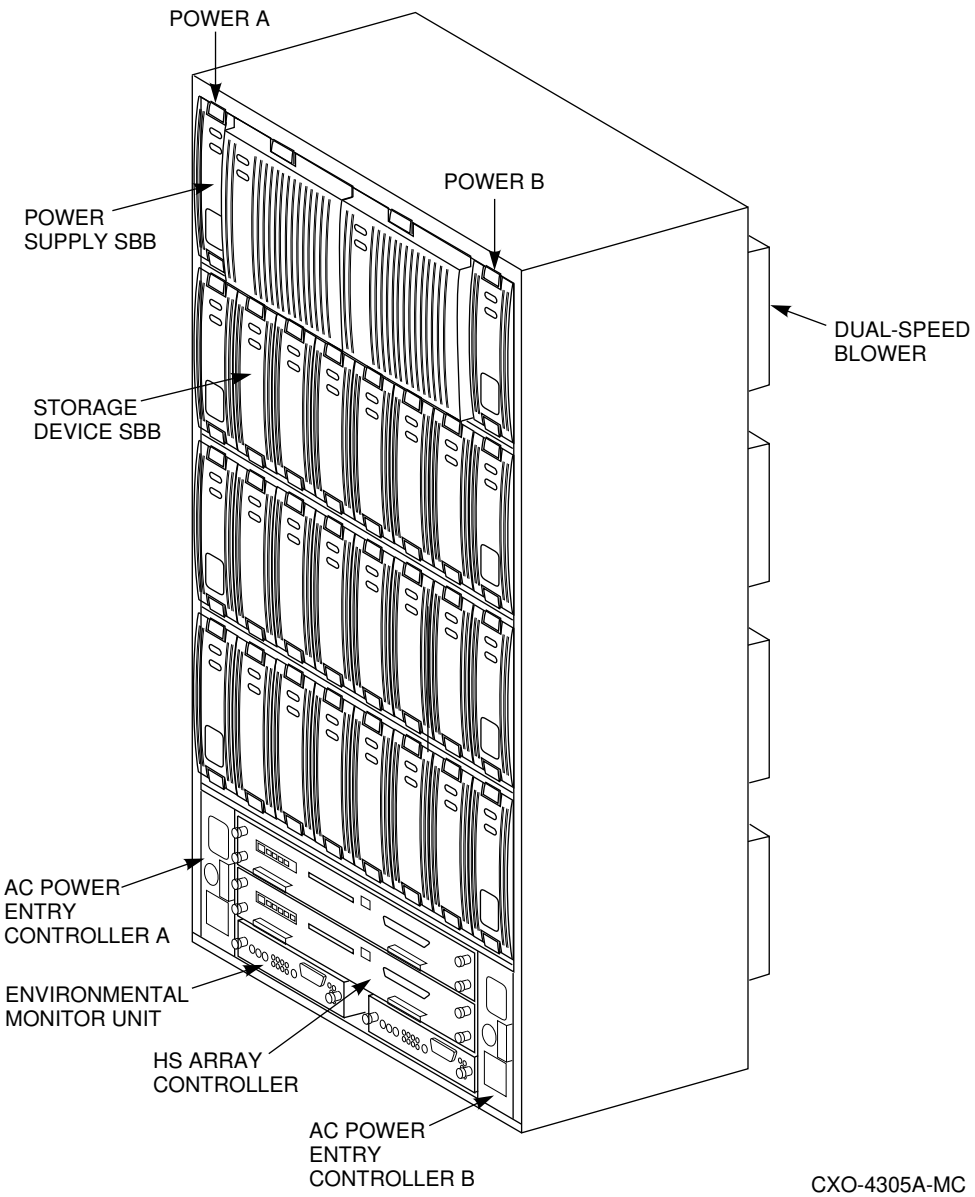

This shelf contains a single backplane for controller-to-storage connections. No external SCSI device cables are needed, and very little physical configuring is required as described in Section 3.4.7. See the *StorageWorks Solutions SW300-Series RAID Enclosure Installation and User's Guide* for more information on this shelf.

3.3 Controllers

The following sections describe specifics for configuring controllers.

3.3.1 Nonredundant HS Array Controller Configurations

The following considerations apply to nonredundant controller configurations:

- A nonredundant controller must be installed in the controller slot furthest from the BA350–MA controller shelf's SCSI connectors. This slot is SCSI ID 7. By using SCSI ID 7, SCSI ID 6 (the other controller slot) is available as an additional ID on the storage shelf.
- For HSD30 array controllers, only four HSD30 array controllers per DSSI bus are allowed (for example, four nonredundant controllers, or one dual-redundant pair and two nonredundant controllers, or two dual-redundant pairs).
- The maximum recommended HS array controller subsystem configuration using the BA350-series storage shelves is six devices per port (36 devices) for six port controllers, or 18 devices for three port controllers. This allows for the addition of another HS array controller and additional power supplies in the storage shelves. A nonredundant controller configuration can support seven devices per port. However, Digital recommends six devices per port to permit future upgrades.
- The maximum controller subsystem configuration using an SW300-series cabinet shelf is four devices per controller port. The maximum is determined by the design of the cabinet's shelf and backplane.
- The controller for a configuration using an SW300-series cabinet shelf must be installed in the lower portion of the shelf (refer to Figure 3–9. Controllers cannot be installed in the upper four areas, which are reserved for storage devices.

3.3.2 Dual-Redundant HS Array Controller Configurations

The following considerations apply to dual-redundant HS array controller configurations:

- Dual-redundant controllers are located in the same controller shelf, and are connected to each other through the shelf backplane. Both controllers have access to all the devices on each other's ports. This setup increases availability and provides for failover when one controller in the pair fails. (The surviving controller takes over service of all devices.)
- Dual-redundant controller configurations follow the same guidelines as nonredundant configurations, except there is no option to increase to 7 devices per port.
- Both controller's cache modules must have the same number of megabytes, and both firmware versions must be identical. Both cache modules must be the same type (either both read cache or both write-back cache). If there is a mismatch, neither controller will access any devices.
- Dual-redundant HSJ array controllers must be on the same star coupler.
- Dual-redundant HSD30 array controllers can be on separate DSSI buses.
- Dual-redundant HSZ array controllers must be on the same SCSI bus.

3.3.3 Optimal Performance Configurations

For optimal performance, configure to the following guidelines:

- Balance the number of devices on each port of the controller. For example, for 18 (35) SBBs attach three devices on each of the six ports. This maximizes parallel activity across the controller's available ports. Figure 3–10 is an example of how to balance devices across ports.
- Intermixing higher and lower performance devices on each port is beneficial. Therefore, put higher performance devices on separate ports. For example, put multiple solid state disks on separate ports.

  Use the guidelines given in Table 3–1.

Table 3–1 High-Performance Devices per Port

Number of Relatively Higher Performance Devices	Maximum Number of Devices Configured per Port: 6-Ported	Maximum Number of Devices Configured per Port: 3-Ported
1 - 3	1	1
4 - 6	1	2
7 - 9	2	3
10 - 12	2	4
13 - 15	3	5
16 - 18	3	6

- Maximize the amount of cache memory per controller with the 16- or 32-MB cache module option.

Highest Performance

Use a dual-redundant controller configuration and balance the number of devices across the two controllers. Do this through your operating system by ordering how the devices are mounted or sequenced, or through the controller by setting preferred path definitions.

This results in approximately half of the devices normally accessed through each controller. Should one controller fail, its devices fail over to the other controller automatically.

Figure 3–10 Balanced Devices Within Storage Shelves

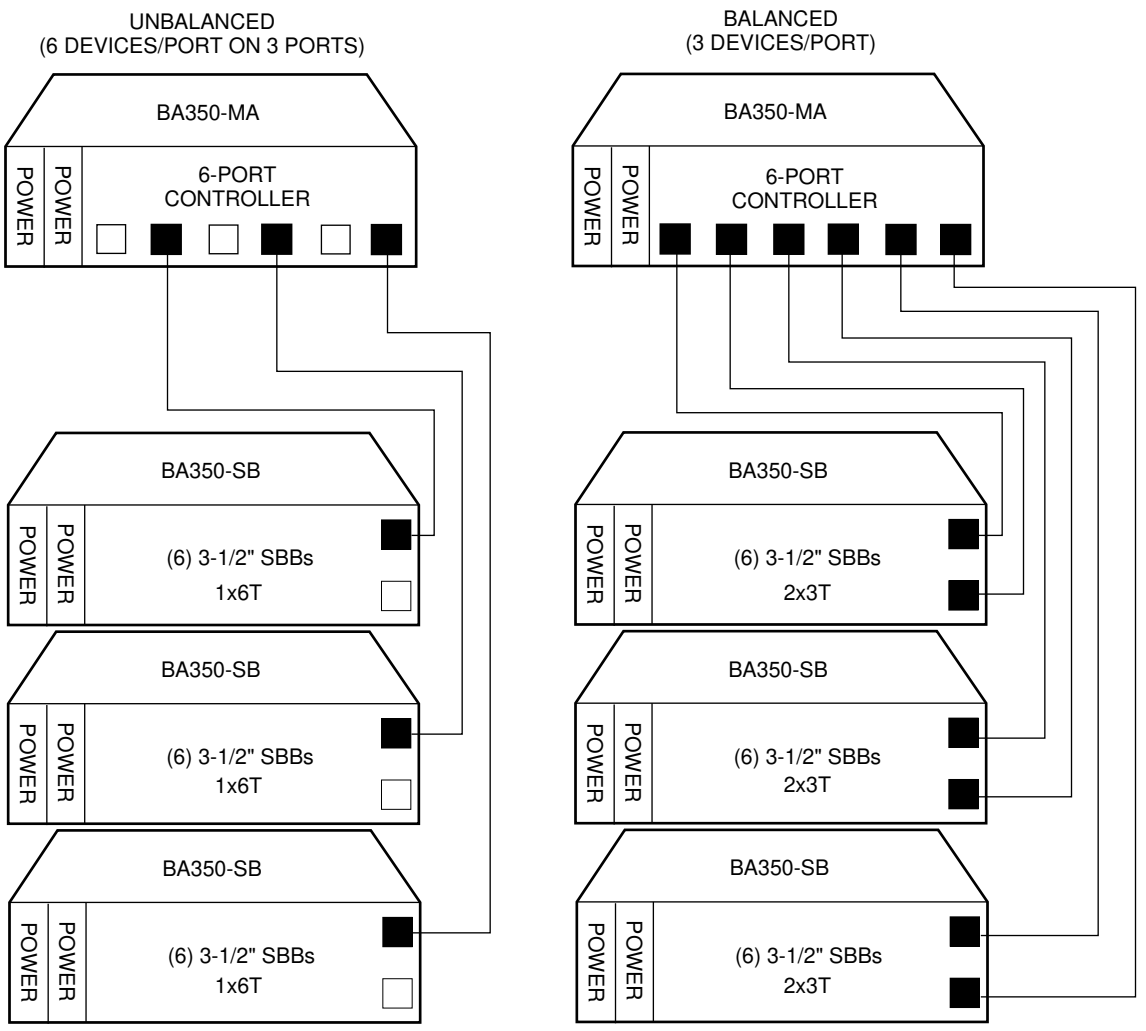

CXO-3698C-MC

3.3.4 Optimal Availability Configurations

For optimal availability, configure to the following guidelines:

- Use dual-redundant controllers and redundant power supplies in all shelves.
- Place storageset members on different controller ports and different storage shelves.
- Use predesignated spares on separate controller ports and storage shelves.
- Place storageset members on separate controllers when using host-based RAID implementations (for example, shadowing).

Figure 3–11 shows examples of optimal configurations for RAIDset members and designated spares on separate controller ports.

Figure 3–11 Optimal Availability Configuration Example

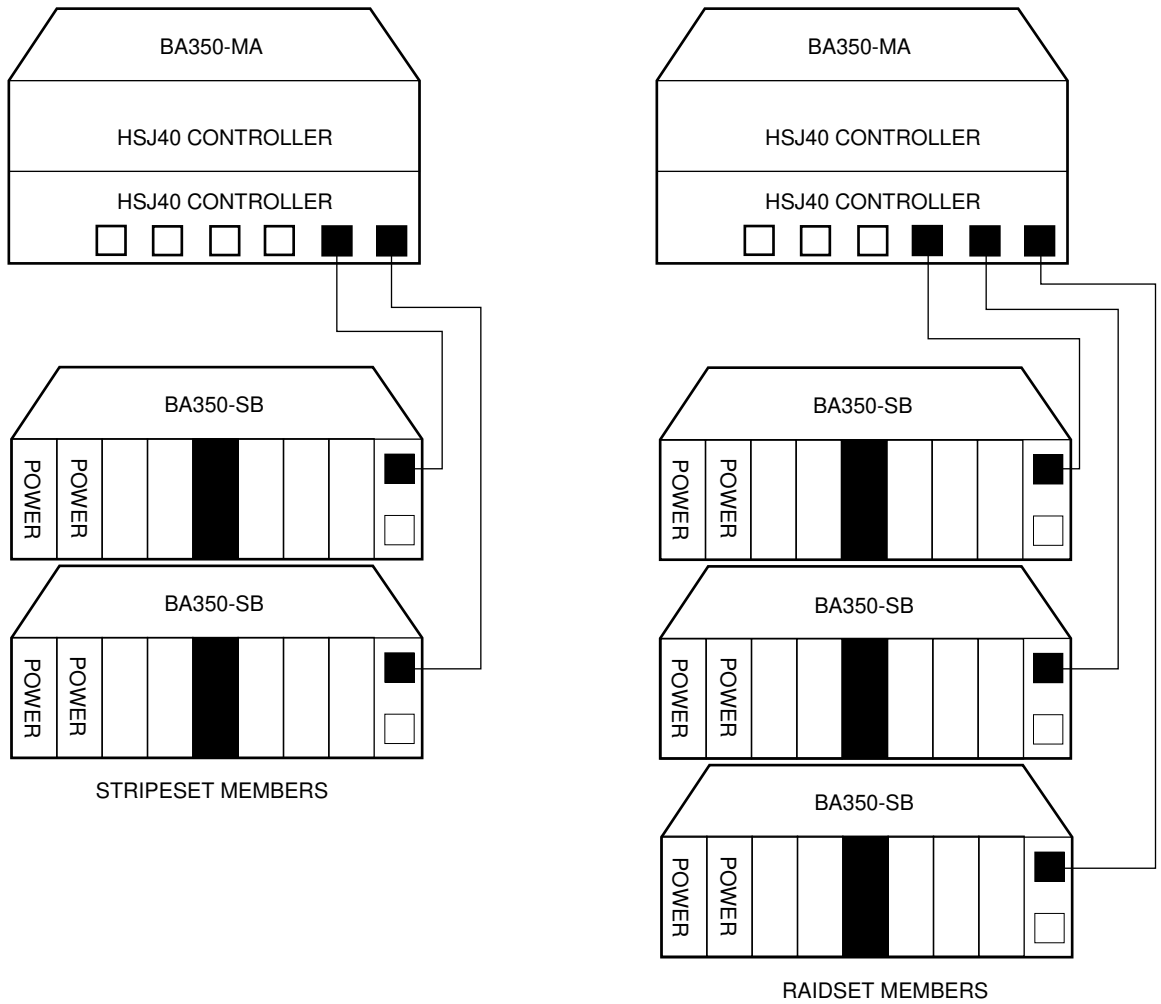

Highest Availability

For highest availability, especially with RAID implementations, follow these guidelines:

- For host-based RAID implementations, split the normal access path between controllers.
- Use redundant power supplies in all shelves.

3.4 Typical and Recommended Configurations

The following sections describe recommended device configurations for 3½-inch and 5¼-inch SBBs.

Note

Intermixing disk SBBs and tape SBBs on the same controller port is permitted, provided all other configuration rules in the chapter also are obeyed.

Table Conventions

The following describes the designations used in the following sections. These designations will help you to determine the possible devices in each shelf and the possible number of devices in similarly configured shelves:

```
(n)m x oT
   or
(n)m x oJ
```

Where:

n is the number (in parentheses) of storage shelves of this type.
m is the number of SCSI–2 connections to a storage shelf.
x is the symbol used for multiply.
o is the number of devices on each SCSI–2 connection.
T indicates the storage shelf is terminated.
J indicates the storage shelf is jumpered.

According to the formula:

m x o is the number of possible devices in each shelf.

n x m x o is the possible number of devices in similarly configured shelves.

3.4.1 3½-Inch SBB Restrictions

There are no restrictions for adding 3½-inch SBBs to a configuration. Refer to your product-specific SPD and release notes for a list of specific supported device types.

3.4.2 3½-Inch SBB Recommended Configurations

Tables 3–2 and 3–3 list some recommended configurations for 3½-inch SBBs in 6-port and 3-port controller configurations.

Table 3–2 3½-Inch SBB Configurations, 6-Port Controllers

Number of Devices	Number of BA350–SB Shelves*	Configure as**	Available as 3½-Inch SBBs***	Ports Used
1-2	1	(1)2x3T	5-4	1-2
3-4	2	(2)2x3T	9-8	3-4
5-18	3	(3)2x3T	13-0	5-6
19-24	4	(2)2x3T	5-0	6
		(2)1x6T		
25-30	5	(1)2x3T	5-0	6
		(4)1x6T		
31-36	6	(6)1x6T	5-0	6
37-42****	6	(6)1x7T	5-0	6

Key for Table Conventions

2x3T refers to two (split) SCSI–2 connections, separately terminated in the shelf. The devices appear as IDs 0, 2, 4, and 1, 3, 5.

1x6T refers to a single path SCSI–2 connection terminated in the shelf. The devices appear as IDs 0 through 5.

1x7T refers to a single path SCSI–2 connection terminated in the shelf. The devices appear as IDs 0 through 6.

Parentheses ( ) around a number indicates the number of storage shelves.

T indicates that the shelf is terminated.

* Consult *StorageWorks Solutions Shelf and SBB User's Guide* for BA350–SB shelf information.
** Each BA350–SB shelf's upper SCSI–2 port connector is cabled to a controller port. The lower SCSI–2 port connector is attached to a controller port for 2x3T configurations and is unused for a 1x6T or 1x7T.
*** Available for future expansion.
**** Nonredundant controller and power only (not recommended) for 6 port controllers.

Table 3–3 3½-Inch SBB Configurations, 3-Port Controllers

Number of Devices	Number of BA350–SB Shelves*	Configure as**	Available for 3½-Inch SBBs***	Ports Used
1-2	1	(1)2x3T	5-4	1-2
3-12	2	(1)2x3T	9-0	3
		(1)1x6T		
13-18	3	(3)1x6T	5-0	3
19-21****	3	(3)1x7T	2-0	3

Notes

2x3T: Two (split) SCSI–2 connections, separately terminated in the shelf. The devices appear as IDs 0, 2, 4, and 1, 3, 5.

1x6T: Single path SCSI–2 connection terminated in the shelf. The devices appear as IDs 0 through 5.

1x7T: Single path SCSI–2 connection terminated in the shelf. The devices appear as IDs 0 through 6.

* Consult the *StorageWorks Solutions Shelf and SBB User's Guide* for BA350–SB shelf information.
** Each BA350–SB shelf's upper SCSI–2 port connector is cabled to a controller port. The lower SCSI–2 port connector is attached to a controller port for 2x3T configurations and is unused for a 1x6T or 1x7T.
*** Available for future expansion.
**** Nonredundant controller and power (not recommended).

3.4.3 5¼-Inch SBB Restrictions

The following restrictions apply when using 5¼-inch SBBs in your configuration. Refer to your model-specific SPD and release notes for a list of specific supported device types.

- A maximum of two 5¼-inch SBBs are allowed per port (in a single shelf), or four 5¼-inch SBBs per port (in adjacent jumpered shelves).

  No more than four 5¼-inch SBBs are allowed on a single port (that would take three shelves, which cannot be configured within SCSI–2 cable limits).

- Intermixing 5¼-inch and 3½-inch SBBs is permitted using up to six devices per port (maximum of two shelves), with no more than three 5¼-inch SBBs.

  You can use two 5¼-inch SBBs and four 3½-inch SBBs in two BA350–SB shelves, or one 5¼-inch SBB and four 3½-inch SBBs in one BA350–SB shelf.

- When using jumpered shelves, only five jumpered-pair shelves (for a total of 10 shelves) can be used within each SW800-series data center cabinet. The sixth port is left unused. Alternately, four jumpered ports permit two single-shelf connections on the remaining two controller ports, which is preferable.

  This is permitted only in the lower front of the cabinet from the C1 controller position. Five such ports can take up to a maximum of 10 front shelf locations, with no allowance for cable access to shelves or devices in the rear of the SW800-series cabinet. (Refer to Figure 3–1.)

  A more balanced configuration consists of four 5¼-inch SBBs on each of four ports and two ports each with two 5¼-inch SBBs.

- When using jumpered shelves, only two jumpered-pair shelves (for a total of four shelves) can be used with an SW500-series cabinet.

- When five ports (SW800) or two ports (SW500) have doubled shelves for 5¼-inch SBBs (4+2), TZ8*x*7 tapes cannot be connected or even mounted in the cabinet because all or most (front) shelf locations are needed for the 5¼-inch SBBs.

3.4.4 5¼-Inch SBB Recommended Configurations

Tables 3–4 and 3–5 list some recommended configurations for 5¼-inch SBBs exclusively.

Table 3–4 5¼-Inch SBB Configurations, 6-Port Controllers

Number of Devices	Number of BA350–SB Shelves*	Configure as	Available for 5¼-Inch SBBs**	Ports Used
1-2	1	(1)2x3T	1-0	1-2
3-4	2	(2)2x3T	1-0	3-4
5-6	3	(3)2x3T	1-0	5-6
7-8	4	(2)1x6T	1-0	6
		(2)2x3T		
9-10	5	(4)1x6T	1-0	6
		(1)2x3T		
11-12	6	(6)1x6T	1-0	6
13-14***	7	(6)1x6T	1-0	6
		(1)1x6J		
15-16***	8	(6)1x6T	1-0	6
		(2)1x6J		
17-18***	9†	(6)1x6T	1-0	6
		(3)1x6J		
19-20***	10†	(6)1x6T	1-0	6
		(4)1x6J		

†Cannot be configured in SW500-series cabinets.

Key for Table Conventions

Each BA350–SB shelf has its upper connector cable attached to either the adjacent BA350–SB shelf's lower connector (1x6J), or a controller port connector (2x3T or 1x6T).

The lower connector cable is attached to either an adjacent BA350–SB shelf's upper connector (1x6J, as in the first list item), controller port connector (2x3T), or is unused (1x6T).

Parentheses ( ) around a number indicate the number of storage shelves.

T indicates the shelf is terminated.

J indicates the shelf is not terminated and jumpered to the next shelf.

* Consult the *StorageWorks Solutions Shelf and SBB User's Guide* to configure BA350–SB storage shelves.
** Available for additional 5¼-inch device.
*** When used with the controller in the C1 position in an SW800-series or SW500-series cabinet. (Refer to Figure 3–1 for SW800-series data center cabinet controller positions.)

Table 3–5 5¼-Inch SBB Configurations, 3-Port Controllers

Number of Devices	Number of BA350–SB Shelves*	Configure as	Available for 5¼-Inch SBBs**	Ports Used
1-2	1	(1)2x3T	1-0	1-2
3-4	2	(1)2x3T	1-0	3
		(1)1x6T		
5-6	3	(3)1x6T	1-0	3
7-8	4	(3)1x6T	1-0	3
		(1)1x6J		
9-10	5	(3)1x6T	1-0	3
		(2)1x6J		
11-12	6†	(3)1x6T	1-0	3
		(3)1x6J		

†Cannot be configured in SW500-series cabinets.

Notes

Each BA350–SB shelf has its upper connector cable attached to either the adjacent BA350–SB shelf's lower connector (1x6J) or a controller port connector (2x3T or 1x6T).

The lower connector cable is attached to either an adjacent BA350–SB shelf's upper connector (1x6J, as in the first list item), controller port connector (2x3T) or is unused (1x6T).

* Consult the *StorageWorks Solutions Shelf and SBB User's Guide* for BA350–SB shelf information.
** Available for additional 5¼-inch device.

3.4.5 Intermixing 5¼-Inch and 3½-Inch SBBs

Use these guidelines for intermixing 5¼-inch and 3½-inch SBBs:

- Treat each 5¼-inch SBB as three 3½-inch SBBs.
- Each 5¼-inch SBB must have its SCSI–2 ID set manually using the address switch on the rear of the SBB or by setting the switch to automatic and letting the slot connector dictate the device address. (Refer to the *StorageWorks Solutions Shelf and SBB User's Guide*.)
- A 5¼-inch SBB can be located in the same shelf with three or four 3½-inch SBBs.

3.4.6 Atypical Configurations

By unbalancing the number of devices per controller port, configurations can be devised with a smaller shelf count. This results in lower performance and/or availability. Table 3–6 lists the minimum shelf count for various numbers of 3½-inch SBBs in an SW800 data center cabinet for 6-port controller configurations and Table 3–7 lists them for 3-port controller configurations.

Table 3–6 Small Shelf Count Configurations, 6-Port Controllers

Number of Devices	Number of BA350–SB Shelves*	Configure as	Ports Used
1-6	1	1x6T**	1
7-12	2	1x6T	2
13-18	3	1x6T	3
19-24	4	1x6T	4
25-30	5	1x6T	5
31-36	6	1x6T	6
37-42***	6	1x7T	6

Key for Table Conventions

* Consult the *StorageWorks Solutions Shelf and SBB User's Guide* for BA350–SB shelf information.
** T indicates that the shelf is terminated.
*** Nonredundant controller and power configurations (not recommended).

Table 3–7 Small Shelf Count Configurations, 3-Port Controller

Number of Devices	Number of BA350–SB Shelves*	Configure as	Ports Used
1-6	1	1x6T	1
7-12	2	1x6T	2
13-18	3	1x6T	3
19-21**	3	1x7T	3

Notes

* Consult the *StorageWorks Solutions Shelf and SBB User's Guide* for BA350–SB shelf information.
** Nonredundant controller and power configurations (not recommended).

3.4.7 SW300-Series Cabinet Deskside RAID Configuration

The SW300-series cabinet shelf (refer to Figure 3–9) can accommodate storage, controller, and support hardware within the limits described in Table 3–8. (The rules previously described in this chapter generally apply only when using BA350-series shelves.)

Table 3–8 SW300-Series Cabinet Shelf Configuration

Field Replaceable Unit	Minimum	Maximum
StorageWorks building block (SBB) shelf power supplies	4	8
3½-Inch storage SBBs	0[1]	24
5¼-Inch storage SBBs	0[1]	8
HS array controllers	1	2
Controller cache modules	0	2
Environmental monitor units (EMUs)	1	2
AC power entry controllers	1	2
Dual speed blowers	8	8

[1]Minimum of one for both 3½-inch and 5¼-inch SBBs.

The SW300-series cabinet shelf is called a ‘‘deskside RAID’’ configuration because its design allows for the easy creation of storagesets (stripesets and RAIDsets). Although you can configure 3½-inch and 5¼-inch SBBs in *any* combination within this shelf, Digital recommends that you take advantage of the shelf layout for storagesets.

The SW300-series cabinet shelf includes an integrated backplane that contains six single-ended SCSI device buses. The backplane device buses eliminate the need for external device cabling to the controller device ports.

Each device bus runs vertically, attaching to up to four SCSI devices (IDs 0–3). The controller slots in the lower portion of the shelf occupy SCSI IDs 6 and 7, in much the same way as in a BA350–MA shelf.

Note

The vertical arrangement of the SW300-series cabinet shelf device buses marks a departure from the convention established with BA350–SB storage shelves. Devices arranged horizontally in a BA350–SB shelf are typically on the same controller port. However, horizontally arranged devices in SW300-series cabinet shelf are each on a *different* controller port.

This layout allows storagesets, which normally consist of devices on different controller ports (for best performance and availability), to be arranged as horizontal groups of devices.

The SW300-series cabinet shelf SCSI device bus configuration appears in Figure 3–12.

See the *StorageWorks Solutions SW300-Series RAID Enclosure Installation and User's Guide* for more information on this shelf.

Figure 3–12 SW300-Series Cabinet Shelf SCSI Buses

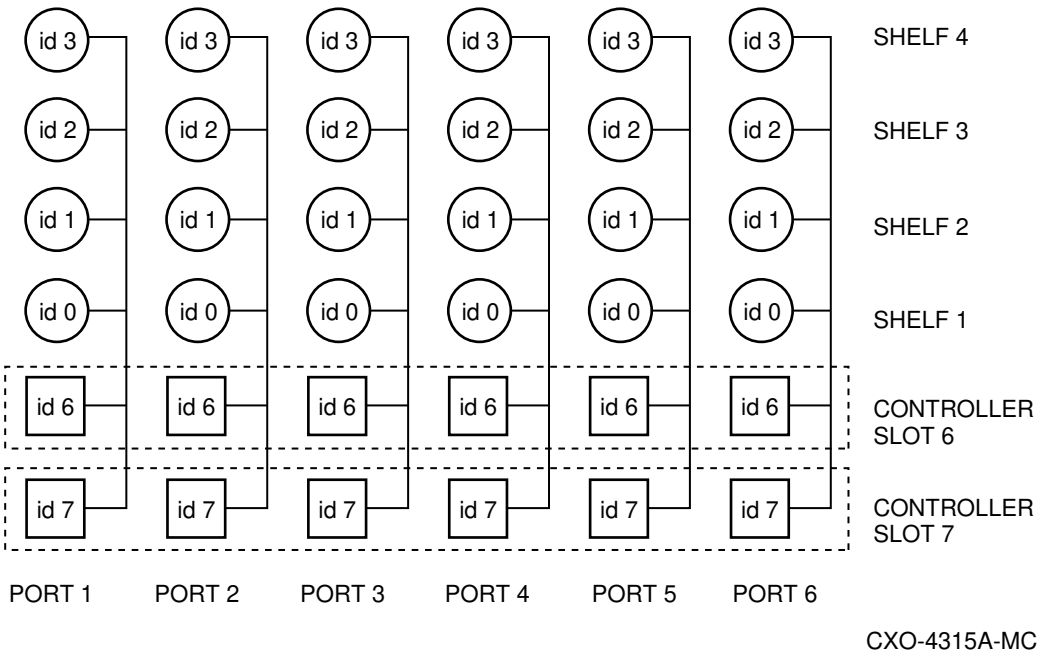

3.5 Host Port Cable Lengths

Following are special guidelines for configuring host cables/buses to and from the HS array controller.

HSJ Array Controllers

- The maximum supported internal CI host cable length is 1.8 meters (6 feet).
- The maximum supported external CI cable length is 45 meters (147.6 feet).

HSD30 Array Controllers

- DSSI cable length between nodes/members on the DSSI bus must be no greater than 9.14 meters (30 feet).
- Total DSSI cable length (end-to-end) on one DSSI bus must be no greater than 18.3 meters (60 feet).

HSZ Array Controllers

The maximum length (end-to-end) of fast and slow buses is summarized in Table 3–9.

Table 3–9 SCSI Bus Maximum Lengths

Bus Type	Transfer Rate	Meters	Feet
8-bit, single-ended	5 MB/s	6	19.7
8-bit, single-ended	10 MB/s	3	9.8
16-bit, differential	20 MB/s	25	82.0

3.6 CD–ROM Restrictions

HSOF supports CD–ROM readers with the following restrictions:

- CD–ROM devices must not be removed or inserted with power applied to the device shelf.
- CD–ROMs packaged two per SBB must not be placed in a split but BA350–S*x* shelf. Placing such SBBs on split buses causes adverse effects during device warm swap and bus quiesce operations.
- CD–ROM devices must not be mixed with other device types (disks, tapes, and so forth) on the same controller SCSI–2 device port.
- The RRD42 CD–ROM reader must be the only device on its controller SCSI–2 device port.

3.7 Host Adapter Support

The following sections list the host adapter support for each controller model at the time of this printing. Please refer to the latest HSOF release notes for the most current listing of supported host adapters.

3.7.1 HSJ Array Controllers Host Adapter Support

The HSJ array controllers follow the same CI configuration rules as the members of the HSC controller product family that support from 1 to 31 host nodes.

The following host adapters are currently supported for HSJ array controllers:

- CIXCD–AB

  CIXCD–AC (both for XMI-based systems)
- CIBCA–B*x* (for BI-based systems)
- CI780 (for SBI-based systems)

The CIBCA–A, which is superseded by the CIBCA–B host adapter, is not supported.

Note

Refer to the *VAXcluster Systems Guidelines for VAXcluster System Configurations* manual for a list of CPUs supported by these adapters.

3.7.2 HSD30 Array Controller Host Adapter Support

The following host adapters are currently supported for HSD30 array controllers:

- SHAC-based embedded/native (for various VAX™ and DEC™ systems)
- Embedded/native adapter for DEC 4000 systems
- KFMSA (for XMI-based systems)
- KFESA (for AlphaServer 2000™, AlphaServer 2100, AlphaServer 1000)

3.7.3 HSZ Array Controller Host Adapter Support

The following host adapters are currently supported for HSZ array controllers:

- KZTSA (for DEC 3000 systems). See the HSZ array controller release notes for restrictions.
- KZMSA (for DEC 7000 and DEC 10000 systems via DWZZA)
- PMAZC (for DEC 3000 system via DWZZA)

Note

The KZPSA and KZPBA were certified with the DEC OSF/1 Version 3.2 operating system.

Refer to model-specific HS array controller software product description and firmware release notes for host adapter restrictions and the most current information.

4
Installation

4.1 Customer Site Preparation

Site planning and preparation are necessary before installing an HS array controller subsystem. Site preparation activities should have been completed before you received your subsystem order. However, if your planning or preparation was incomplete, complete all required site preparation before you begin the installation process.

WARNING

To prevent damage to equipment and personnel, make sure all power sources meet the specifications required for this equipment. A Digital Multivendor Customer Services engineer can help you determine your power requirements.

Your site preparation plan should include:

- Power requirements
- Floor space requirements
- Environmental considerations (such as temperature and humidity)
- Device environment (including maximum altitude for operation and storage)
- Subsystem weight considerations (for floor supports)
- Upgrade considerations (for future subsystem expansion)

Refer to the *StorageWorks SW800-Series Data Center Cabinet Installation Guide* (three phase), the *StorageWorks SW500-Series Cabinet Installation and User's Guide* (single phase), or the *StorageWorks Solutions SW300-Series RAID Enclosure Installation and User's Guide* for details concerning site preparation requirements and unpacking information for your controller's subsystem cabinet. Refer to device model-specific documentation for device environmental specifications.

Using a site preparation plan helps you fulfill the requirements to support your controller subsystem. After verifying that all requirements are met, you are ready to install your controller subsystem.

The following sections contain information you should read before installing your controller subsystem.

4.1.1 Power and Power Cord Requirements

Before installing your controller subsystem, ensure that the correct power cable (frequency and voltage) for your site is attached to the cabinet's cable distribution unit (CDU), and that the power requirements for your country and your site have been met at the cabinet level.

For specific information about power cord plugs, refer to the StorageWorks cabinet specific installation and user's guides listed in this chapter and in the preface of this manual.

4.1.2 Shelf Power Configuration Rules

Refer to the *StorageWorks Solutions Shelf and SBB User's Guide* for specific power unit configuration rules. The term power unit describes both power supplies and battery backup units.

4.1.3 Environmental Considerations

The HS array controller subsystem operates in a business or light industrial environment that complies with FCC Class A computing device standards. The cleanliness of the site is important for the operation of any computer system, and HS array controllers require adherence to cleanliness standards. Temperature and humidity standards must be met to maintain proper operation of your subsystem.

Environmental Specifications

The StorageWorks product line environmental specifications listed in Table 4–1 are the same as for other Digital storage devices.

Table 4–1 StorageWorks Environmental Specifications

Condition	Specification
	Optimum Operating Environment
Temperature Rate of change	+18° to +24°C (+65° to +75°F) 11°C (20°F per hour)
Relative humidity	40% to 60% (noncondensing) with a step change of 10% or less (noncondensing)
Altitude	From sea level to 2400 m (8000 ft)
Air quality	Maximum particle count .5 micron or larger, not to exceed 500,000 particles per cubic ft of air
Inlet air volume	.026 cubic m per second (50 cubic ft per minute)
	Maximum Operating Environment (Range)
Temperature	+10° to +40°C (+50° to +104°F) Derate 1.8°C for each 1000 m (1.0°F for each 1000 ft) of altitude Maximum temperature gradient 11°C/hr (20°F/hr) ±2°C/hr (4°F /hr)
Relative humidity	10% to 90% (noncondensing) Maximum wet bulb temperature: 28°C (82°F) Minimum dew point: 2°C (36°F)

(continued on next page)

Table 4–1 (Cont.) StorageWorks Environmental Specifications

Condition	Specification
	Maximum Nonoperating Environment (Range)
Temperature	–40° to +66°C (–40° to +151°F) (During transportation and associated short–term storage)
Relative humidity Nonoperating	8% to 95% in original shipping container (noncondensing); otherwise, 50% (noncondensing)
Altitude	From –300 m (–1000 ft) to +3600 m (+12,000 ft) MS

4.2 Before You Begin

Before you begin installing your HS array controller subsystem, consider the following items:

- How many people are needed for unpacking and installation?
- What type of tools are needed for unpacking and installation?
- What ESD protection is required? (See Section 4.2.3.)

The following sections discuss these items.

4.2.1 Personnel Needed for Installation

The number of people needed to install an HS array controller subsystem depends on the size and weight of your subsystem cabinet. Most add-on options require only one person.

A fully-loaded SW800-series or SW500-series cabinet can require two to three people to remove it from the shipping pallet because of the cabinet's weight. For details, refer to the *StorageWorks SW800-Series Data Center Cabinet Installation Guide*, the *StorageWorks SW500-Series Cabinet Installation and User's Guide*, or the *StorageWorks Solutions SW300-Series RAID Enclosure Installation and User's Guide*.

4.2.2 Tools Needed for Installation

The following tools may be needed during the installation of your controller subsystem. Not all of the tools listed are required for every cabinet type.

- Wrench to lower and tighten the four cabinet leveler feet.
- Allen wrench (5/32-inch) to open the cabinet front door (SW800-series data center cabinets)
- Allen wrench (3/32-inch) to loosen the four screws that hold the front OCP bezel in place
- Straight-edge screwdriver to install host port cables.
- Very small straight-edge screwdriver to remove trilink connector blocks on HSD30 and HSZ front bezels.
- ESD wrist strap for handling the controller or cache modules (if applicable). The part number for the Portable Anti-Static Kit is 29–26246–00.
- A pointed object for pushing the port buttons on HSD30 and HSZ array controller operator control panels.

4.2.3 Electrostatic Discharge Protection Guidelines

This section describes the necessary precautions and procedure for protecting the controller subsystem components against electrostatic discharge (ESD). ESD is a common problem for any electronic device and may cause lost data, system down time, or other problems. The most common source of static electricity is the movement of people in contact with carpets and clothing materials. Low humidity allows a large amount of electrostatic charge to build up.

Use the following strategies to minimize electrostatic discharge problems:

- Maintain more than 40 percent humidity in the room where your subsystem resides
- Place the subsystem cabinet away from heavy traffic paths.
- Do not use carpet, if possible. If carpet is necessary, choose an antistatic carpet. If a carpet already is installed, place antistatic mats around the subsystem to help decrease electrostatic discharge.
- Always wear an ESD wrist strap when handling modules or the program card.

CAUTION

Use these ESD guidelines or damage can result to your controller or cache modules.

Specific safety precautions must be taken when handling write-back cache modules. Therefore, only qualified service personnel can install or replace write-back cache modules.

ESD Grounding Preparation

Prior to handling (removing or replacing) a controller module, cache module, or program card, do the following:

- Obtain an ESD wrist strap.
- Locate a ground stud (usually located on the cabinet's vertical rail that is common for both the controller shelves and the storage shelves) or other appropriate ground for your cabinet type.

  A ground stud is located on the center vertical rails inside the front and back doors of the SW800-series data center cabinet.

  A ground stud is located on the vertical rails inside the front and back of the SW500-series cabinet.

  The SW300-series enclosures do not have a designated ground stud.
- Obtain an approved antistatic bag and/or a grounded antistatic mat.

4.3 Controller Components Handling Guidelines

As with any electronic equipment, some components of your controller subsystem need special handling. The following sections describe handling guidelines for modules, program cards, and cables.

4.3.1 Module Handling Guidelines

When handling controller or cache modules, use the following ESD grounding procedure:

CAUTION

Use ESD grounding guidelines when handling a controller, cache module, or program card, or damage to the modules could result.

Specific safety precautions must be taken when handling write-back cache modules. Therefore, only qualified service personnel can install or replace write-back cache modules.

1. Obtain and attach an ESD wrist strap to your wrist. Make sure the strap fits snugly to your wrist.
2. Plug (or clip) the other end to your cabinet's grounding stud (or other chassis grounding point) usually located on the vertical rail that separates the controller shelves from the device shelves.
3. Remove the module from its controller shelf slot and place it into an approved antistatic bag or onto a grounded antistatic mat. Remain grounded while working with the module on the antistatic mat.
4. Remain grounded while installing a replacement module.
5. Remove the ESD connection from the cabinet ground stud or other chassis grounding point.
6. Remove the ESD wrist strap from your wrist.

4.3.2 Program Card Handling Guidelines

Use the following guidelines when handling the program card:

CAUTION

Follow these program card guidelines or damage to the program card may result.

- Keep the program card in its original carrying case unless installing it.
- Do not twist or bend the program card.
- Do not touch the contacts.
- Keep out of direct sunlight.
- DO NOT immerse the program card in water or chemicals.
- Always push the eject button to remove the card. (See Figure 4–1).
- An ESD strap is required for installation and removal of the card.
- Keep the ESD shield in place when the controller is in operation.

CAUTION

The program card ESD shield must remain installed over the program card during controller operation to avoid electrostatic discharge that can cause the contents of the program card to be erased.

Figure 4–1 Location of Program Card Eject Button

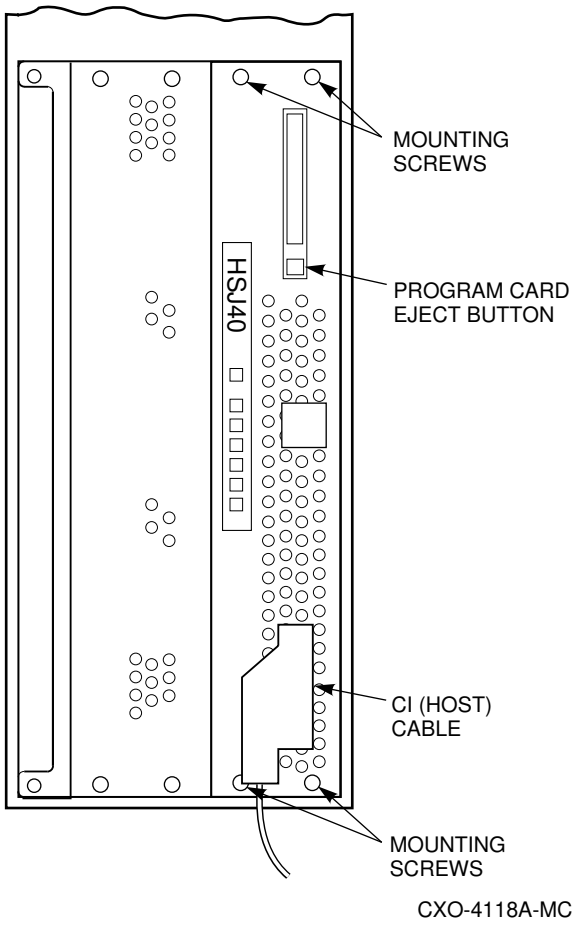

4.3.3 Cabling Guidelines

Preplanning your cabling needs and adhering to cable handling guidelines ensures proper operation of your controller subsystem. The following sections describe host cable handling guidelines for each host interface type (CI, DSSI, and SCSI).

4.3.3.1 CI Host Port Cable Handling Guidelines for HSJ Array Controllers

When handling or moving CI cables with the power on, it is very important that the internal CI cable does not become grounded. This means that **no metal** can touch the silver plug portion of these cables, except a CI host cable connector.

CAUTION

DO NOT let the silver plug portion of the internal CI cable become grounded (touch metal). If this cable should become grounded, damage to the equipment can result.

Maximum CI Host Port Cable Lengths

The maximum lengths for CI host port cables are the following:

- The maximum length of an *internal* CI host port cable, from the controller to the external CI cable connections, is 1.83 meters (6 feet).
- The maximum length of the *external* (blue) CI cables, from the internal CI host port cable connection (at the back of the cabinet) to the star coupler, is 45 meters (147.6 feet).

4.3.3.2 DSSI Host Port Cable Handling Guidelines for HSD30 Array Controllers

Current model HSD30 array controllers have a nonconductive mating guide installed around the outside edge of each controller's host port connector. This guide was developed to help eliminate the possibility of shorting circuits on the DSSI bus when connecting or disconnecting host port cables with power applied. (However, Digital recommends carefully connecting and disconnecting DSSI host port cable connectors *at all times*, even if you have a mating guide installed.)

For HSD30 array controllers *without* the mating guide around their host port connector, *always* handle DSSI host port cables with power removed. When connecting or disconnecting a node to the DSSI bus, node power should be off. Take all DSSI nodes offline to remove power from all entities on the DSSI bus that will be connected to the HSD30 array controller's host port. Never leave active DSSI host buses unterminated during service.

CAUTION

Currently, component damage may result if DSSI host port cables are connected or disconnected with power applied, *unless* the mating guide (as shown in Figure 4–2) is installed around the outside edge of your controller's host port connector. If your HSD30 array controller needs a mating guide, contact your Digital Multivendor Customer Services engineer. The Digital part number is 74–49066–01.

Be aware that the trilink connector block is the interface between the HSD30 array controller and two DSSI cable connections. It is the *trilink* that you may safely disconnect and connect (with host port cables /terminator attached) when you have a mating guide installed. When power is turned on, you must work around any DSSI host port cable or terminator connections to the trilink *without* disconnecting them.

Some DSSI host port cable and terminator connectors will not provide enough access to the trilink screws for you to disconnect the trilink (without first disconnecting the cable and/or terminator). In these cases you will have to remove power from all bus members, and disconnect cables and terminators before disconnecting the trilink connector block.

Newer connectors have a notch in the connector to allow access with a very small straight-edge screwdriver.

Figure 4–2 HSD30 Host Port Connector Mating Guide

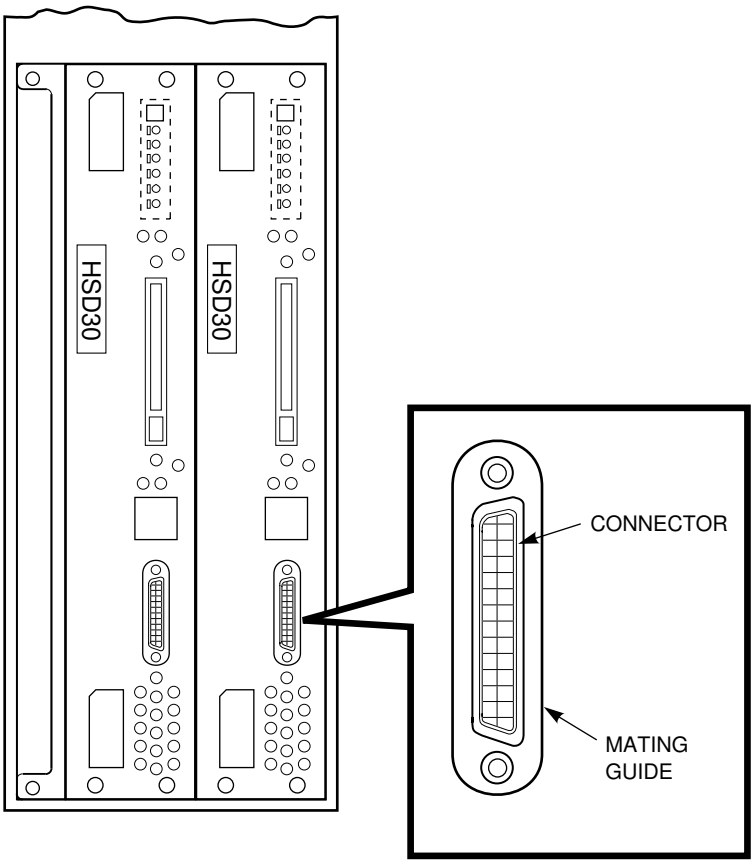

Maximum DSSI Host Port Cable Lengths

The maximum DSSI host port cable lengths are the following:

- The maximum DSSI host port cable length between DSSI nodes for HSD30 array controllers is 9.14 meters (30 feet).
- The overall (end-to-end) maximum configuration DSSI host port cable length is 18.28 meters (60 feet).

Note

HSD30 array controllers use DSSI host port cables with microribbon style connectors at the controller end of the cables.

4.3.3.3 SCSI Host Port Cable Handling Guidelines for HSZ Array Controllers

SCSI host port cables may be removed or replaced with power applied. However, if you must remove the SCSI host port cables for any reason while power is applied, do the following:

- If it is at the end of the SCSI host bus, leave the SCSI host port cable and the terminator connected to the trilink when you remove the trilink from the controller's front bezel.
- If it is in the middle of the SCSI host bus, leave both SCSI host port cables connected to the trilink when you remove the trilink from the controller's front bezel.

These actions are necessary to prevent breaking the SCSI bus connection. Take care not to bend any connector pins when plugging the SCSI host port cables into the trilink.

Maximum SCSI Host Port Cable Lengths

The maximum terminator to terminator length of the fast and slow SCSI buses, including all cables and shelf buses, is listed in Table 4–2.

Table 4–2 SCSI Bus Parameters

Bus Type	Transfer Rate	Meters	Feet
8-bit, single-ended	5 MB/s	6	19.68
8-bit, single-ended	10 MB/s	3	9.84
16-bit, differential	20 MB/s	25	82.02

Refer to the *StorageWorks Solutions Configuration Guide* and the *StorageWorks Solutions Shelf and SBB User's Guide* for more information about SCSI bus cables and connectors, terminators, and trilink connector blocks.

4.3.3.4 Controller-to-Storage Shelf SCSI–2 Device Cable Guidelines

The following are SCSI–2 device cable length restrictions for HS array controllers:

- Controller to the one BA350–SB storage shelf—2.0 meters maximum.
- Controller to the first (of two) BA350–SB storage shelves—1.0 meters maximum.
- Controller to the first TZ8*x*7 tape drive—2.0 meters maximum.
- Controller shelf #1—1.0 meter SCSI–2 cables (typically, in the SW800-series data center cabinet), or 1.0 meter SCSI–2 cables to front storage shelves and 2.0 meter SCSI–2 cables to the back shelves in the SW500-series cabinet.
- Controller shelf #2—2.0 meter SCSI–2 cables (typically, in the SW800-series data center cabinet), or 1.0 meter cables to the back shelves and 2.0 meter cables to the front shelves in the SW500-series cabinet.
- Controller shelf #3—1.0 meter SCSI–2 cables to front storage shelves, and 2.0 meter SCSI–2 cables to the back shelves (typically).
- Controller shelf #4—Typically not used in the SW800-series data center cabinet.

Note

Controller shelf #4 can use 2.0 meter SCSI–2 cables to the front or back shelves in an SW800-series data center cabinet.

- SCSI buses are internal to the backplane in an SW300-series desktop enclosure. No device cables are required.

4.4 Unpacking Your Subsystem

When delivered, your controller subsystem is packed in a carton and attached to a shipping pallet. Upon receipt of your subsystem, perform the following tasks:

- Check the carton and pallet for signs of shipping damage.
- Report any damage to Digital Multivendor Customer Services or the Digital sales office in your area and to the local carrier who delivered your equipment.
- Use standard practices found in the StorageWorks model-specific installation and user's guides (listed in the Related Documentation list in the preface of this manual) to unpack and remove your subsystem cabinet from the shipping pallet.
- Keep all packing materials and shipping labels for later use and reference.
- Remove and read your subsystem documentation before beginning the installation process.

4.5 Installing a Preconfigured or CTO Controller Subsystem

You can order from several preconfigured controller subsystems offered by Digital, or you can choose to order a controller subsystem configured (configured-to-order [CTO]) to your specific needs. Appendix A lists the order numbers for some of the available options and CTO subsystems. Call your Digital sales office for the most up to date option and order numbers.

The HS array controller subsystems are available in large SW800-series data center cabinets or smaller SW500-series cabinets, as well as SW300-series deskside RAID enclosures. Each subsystem comes with a specified number of HS array controllers and cache modules, power supplies, storage shelves with storage devices, and device cables (if applicable). Some systems come with host port cables. Ask your Digital sales representative for details about ordering host port cables. You are encouraged to order preconfigured or CTO subsystems for simplicity of subsystem installation.

If you choose to configure your own controller subsystem, see Chapter 3 for configuration rules and restrictions.

Figure 4–3 shows a version of a preconfigured HS array controller subsystem in an SW500-series cabinet. The SW500-series cabinet has the capacity to hold 10 shelves (either device or controller) mounted horizontally. Six shelves can be installed in the front of the cabinet, and four shelves can be installed in the back of the cabinet.

Figure 4–3 HS Array Controller SW500-Series Cabinet

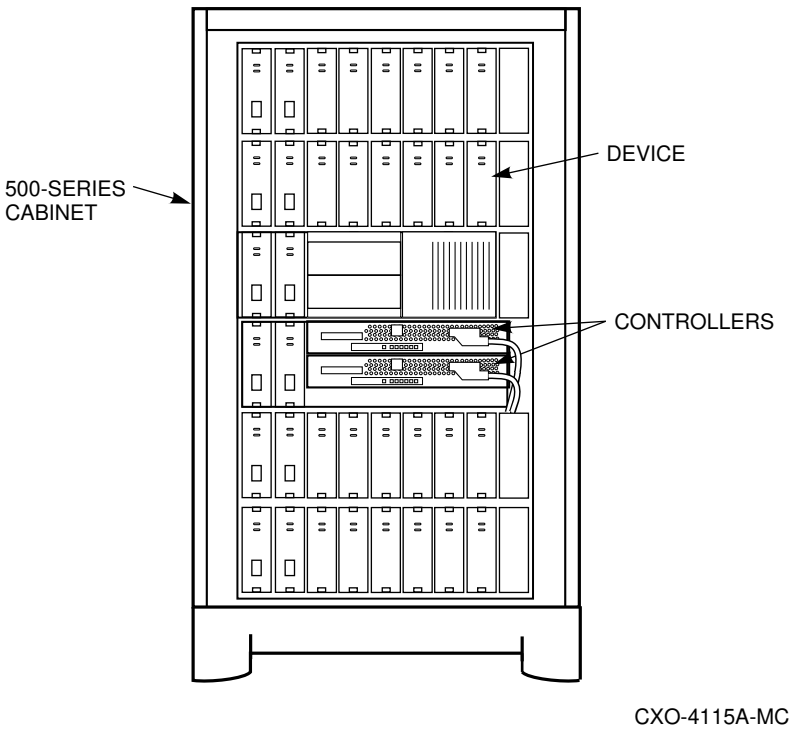

Figure 4–4 shows a version of a preconfigured HS array controller subsystem in an SW800-series data center cabinet. An SW800-series data center cabinet has the capacity to hold up to 18 storage shelves (mounted horizontally) and four controller shelves (mounted vertically). Nine storage shelves can be installed in the front of the cabinet, and nine storage shelves can be installed in the back of the cabinet.

Figure 4–4 HS Array Controller SW800-Series Data Center Cabinet

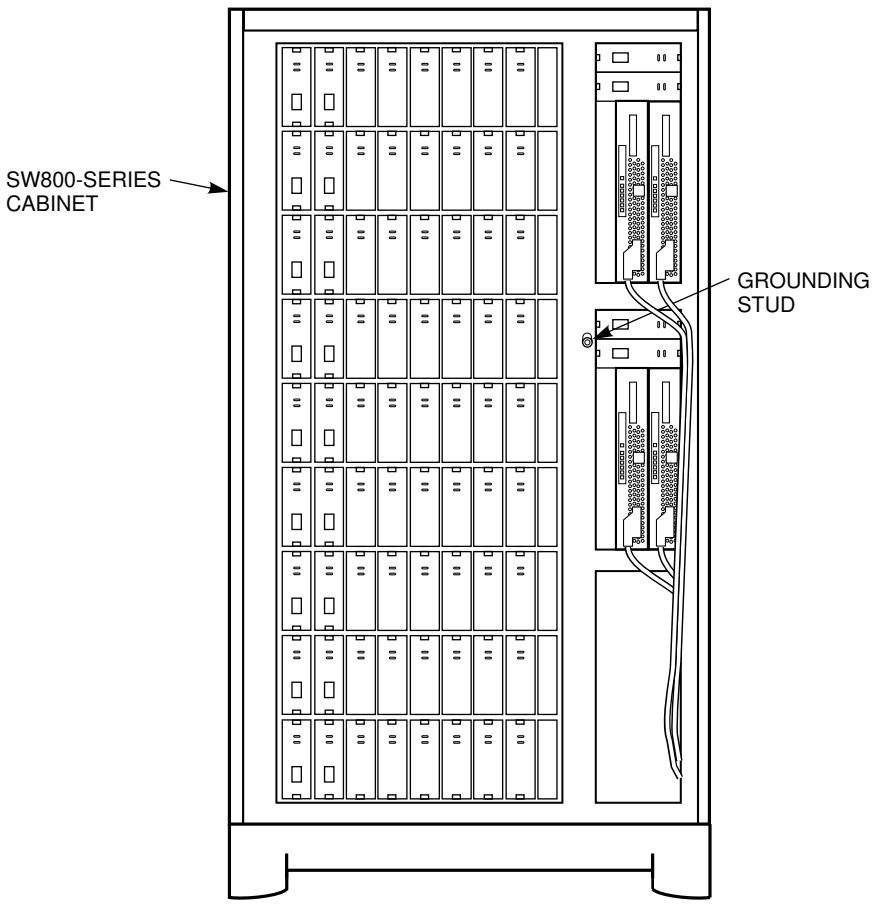

Figure 4–5 shows an SW300-series deskside RAID enclosure. This cabinet holds one storage/controller shelf with a single backplane for controller-to-storage connections. No external SCSI device cables are needed. The SW300-series enclosure holds up to 24 3½-inch SBBs or up to 8 5¼-inch SBBs, and up to two controller and two cache modules.

Figure 4–5 SW300-Series Deskside RAID Enclosure

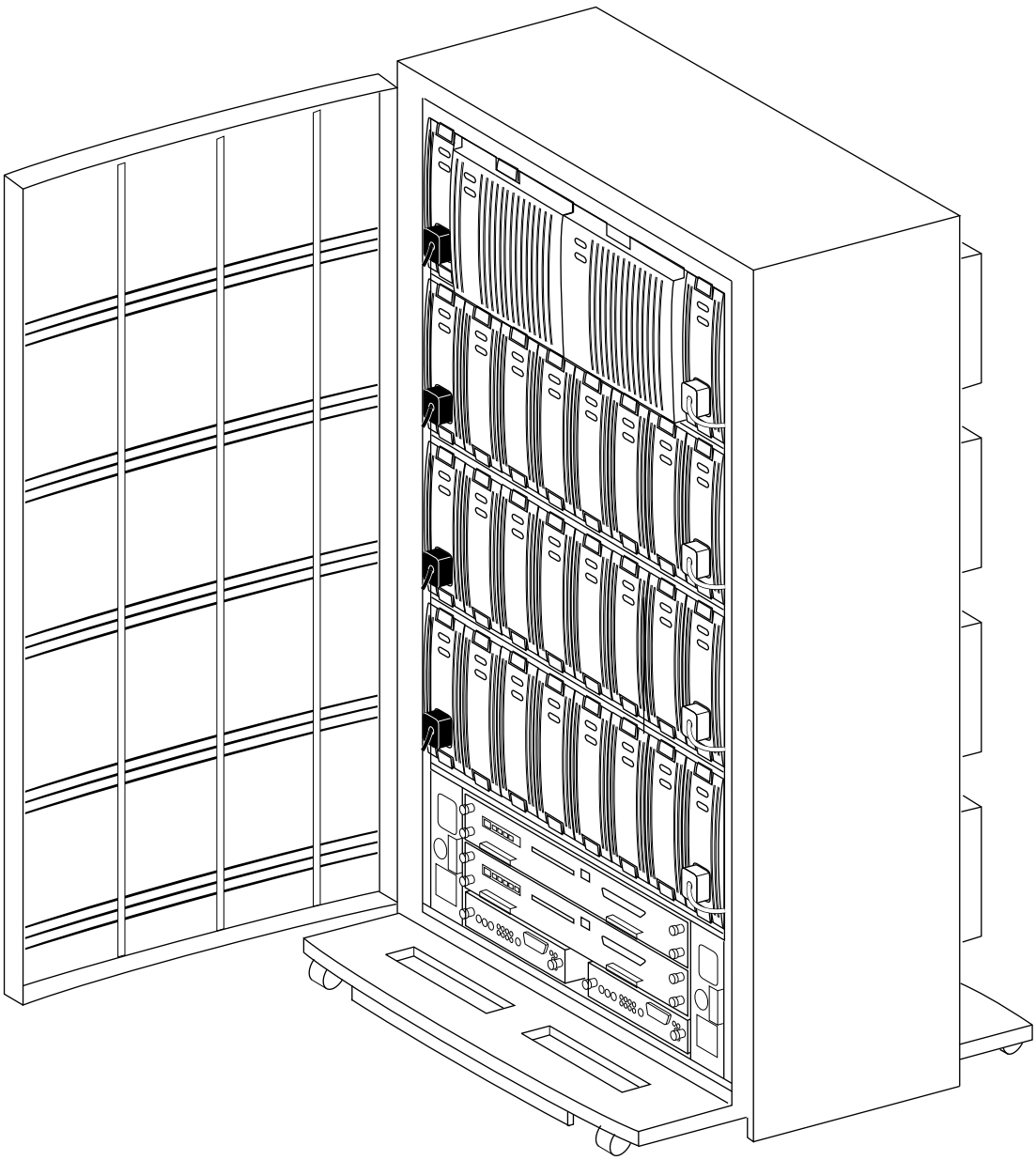

CXO-4268A-MC

General Configuration Rules for SW*xxx*-Series Cabinets

The following rules apply to the configuration of both the SW800-series data center or the SW500-series cabinets:

- Measure cabinet capacities by the number of individual shelves that can be installed into the cabinet (for example, BA350–SB storage shelves).
- Abide by the cabinet-specific installation sequence to maintain gravitational stability. Failure to follow the sequence may result in tipping over the cabinet.
- Shelf configuration rules apply to all cabinets unless otherwise noted. Shelf-specific configuration rules are in the *StorageWorks Solutions Shelf and SBB User's Guide* and in Chapter 3 of this manual.
- Switch-controlled input power is required for each shelf.
- Bulkhead input/output (I/O) connections for the shelves, the host computer, and/or external controllers are provided.
- An SW800-series data center cabinet or an SW500-series cabinet does not typically support dc power modules.
- Input power can be either 60 Hz or 50 Hz with the appropriate cabinet cable distribution unit (SW800–AA or SW800–AB, and SW500–AA or SW500–AB).
- For the controller and storage shelves, a second cable distribution unit (CDU) is required to support more than a single power supply per shelf.

4.6 Installation Instructions for Preconfigured and CTO Subsystems

Installing a preconfigured or CTO HS array controller subsystem requires that you follow the guidelines and procedures discussed in this section.

Preconfigured and CTO subsystems have all subsystem components preinstalled (controller modules, cache modules, SCSI–2 device cables, storage shelves, devices, power supplies, and so forth) except for the host port cables (for HSD30 and HSZ array controllers).

Note

Internal host port cables are included with HSJ array controllers. (External CI cables must be ordered separately.) Host port cables must be ordered separately for HSD30 and HSZ array controllers.

Therefore, you need to do only the following:

1. Unpack the subsystem and move it into place. Refer to cabinet-specific installation guides for unpacking instructions.
2. Open the front and back doors of the cabinet.
3. Visually inspect all subsystem components to determine whether:
   - All cables are seated properly
   - All SBBs are seated properly
   - All controller and cache modules are seated properly
   - All shelf fans are seated properly
   - All program cards are loaded properly

4. Plug the cabinet power cord into the proper wall outlet for your subsystem's power requirements (for example, 60 Hz 220 volts, 50 Hz 240 volts).
5. Plug a maintenance terminal's EIA cable into the maintenance terminal port on the front bezel of your controller (for defining your subsystem's initial configuration parameters). See Section 4.6.1 for maintenance terminal setup information.
6. Turn on the power to your maintenance terminal.

CAUTION

If you are installing an HSJ array controller and it is the first HSJ in an existing cluster, check the CI hardware configuration of all CI controllers in the cluster for the quiet slot time setting. All host adapter CI ports in a CI configuration must have the quiet slot time set to 10. Some older systems may have the quiet slot time set to 7, which causes incorrect operation of the CI.

For HSD30 array controllers: Connect your trilinks, host port cables, and terminators BEFORE applying power.

7. Turn on the circuit breakers (CB1) on your controller subsystem cabinet's cable distribution units (CDU) to the ON (|) position. The subsystem controllers and devices will begin their normal initialization sequence.
8. From your maintenance terminal, check to see which configuration parameters have been preset (if any) at the factory (after controller and device initialization have completed) by entering the SHOW THIS_CONTROLLER command. (A hardcopy printout of factory configuration parameter settings also *may* accompany your subsystem.)
9. Set initial configuration parameters *before* connecting your host port cables. See Chapter 5 for the specific order for setting initial parameters for nonredundant and dual-redundant controller configurations. Set the parameters from a maintenance terminal connected to your controller.
10. **For HSJ array controllers**—Connect the appropriate host port cables to the front bezel host port connectors. Figure 4–9 shows both ends of a typical internal CI host port cable. Section 4.6.2.1 gives instructions for installing HSJ (CI) host post cables.

For HSD30 array controllers—You should have connected the appropriate host port cables and/or terminators to the supplied trilink connector on the front bezel of your controller BEFORE you applied power. Figure 4–6 shows the trilink connectors, DSSI host port cable, DSSI host port cable jumper, and terminator for a dual-redundant HSD30 array controller configuration. See Section 4.6.2.2 for detailed instructions for installing these components.

CAUTION

If your HSD30 array controller's host port connector does not have a mating guide installed as shown in Figure 4–2, do not connect or disconnect the host port cables with power applied.

Figure 4–6 DSSI Host Port Cable Connection

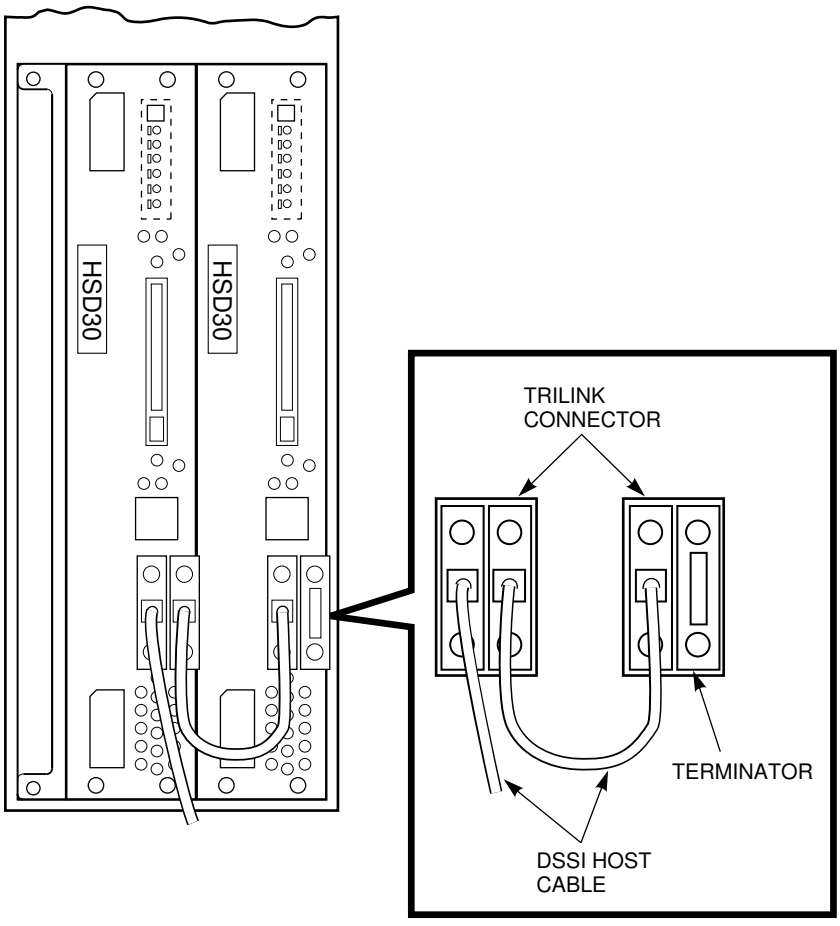

For HSZ array controllers—Connect the appropriate host port cables and terminators to the trilink connector block on the front bezel host port connectors of your controller. Figure 4–7 shows the connection of a SCSI host port cable and terminator to the trilink connector block on a nonredundant HSZ array controller. Figure 4–8 shows the connections for a dual-redundant configuration.

Figure 4–7 SCSI Host Port Cable Connection—Nonredundant Configuration

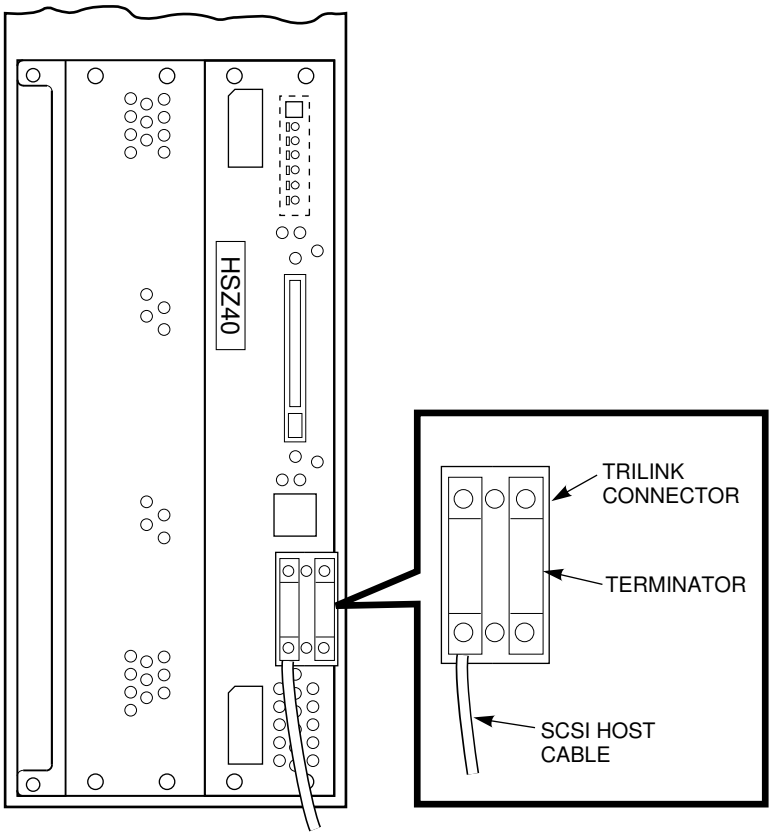

Figure 4–8 SCSI Host Port Cable Connection—Dual-Redundant Configuration

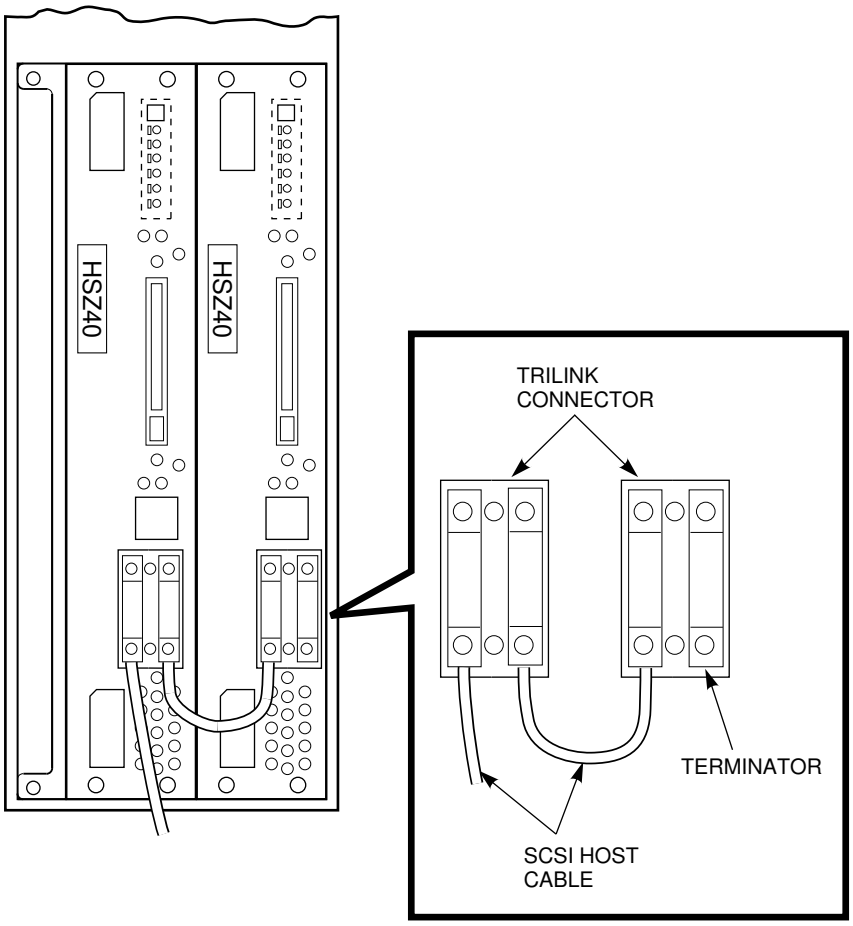

Refer to Sections 4.6.2.1, 4.6.2.3, and 4.6.2.2 for specific information for connecting your controller's host port cables.

Note

Do not connect the controller end of any internal host port cables to your controller unless the controller's initial parameters have been set and the host ports have been enabled.

Figure 4–9 Internal CI Cable with External CI Cables Attached for HSJ Array Controllers

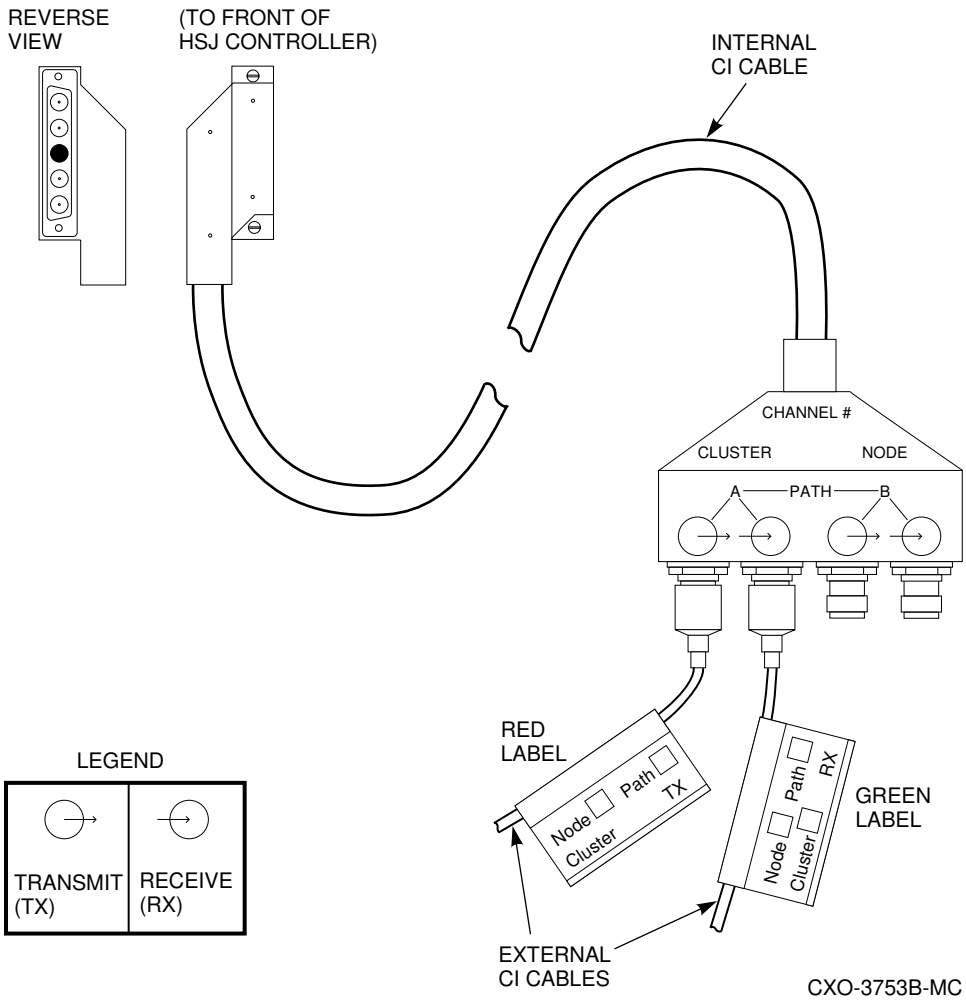

4.6.1 Connecting a Terminal to the Maintenance Terminal Port

You do not need a locally connected maintenance terminal for normal operations. However, you MUST connect a terminal to set initial controller parameters; thereafter, you have the option of using a maintenance terminal only when the host port is inoperative.

Note

Refer to your terminal documentation if you are unfamiliar with how to connect a terminal and set it up.

Use the following procedure to connect most EIA–423 compatible terminals:

1. Make sure the power switch on the back of the terminal is OFF (0).
2. Connect one end of the terminal cable to the back of the terminal.

3. Connect the other end of the terminal cable to the MMJ terminal port on the controller's front bezel.

Note

For HSZ40–B*x* array controllers (with offset MMJ connectors), install the short phone cable (Digital part number 17–03511–04) and the center-to-offset coupler (Digital part number 12–43346–01). Plug the terminal cable into the coupler.

4. Turn the terminal power switch to the ON position.
5. Set the terminal at 9600 baud, with 8 data bits, 1 stop bit, and no parity. Refer to your terminal documentation for terminal setup instructions.
6. Press the Return key if no HS*x*> prompt is visible on the screen. (This brings you to the controller's command line interpreter [CLI] prompt.)

4.6.2 Preset Controller Configuration Parameters

The controller's minimum initial parameters may be defined at the factory. (Refer to the controller's configuration printout supplied with your documentation packet.) You can verify any preset parameters by entering the following commands at the HS*x*> prompt:

```
HSx> SHOW THIS_CONTROLLER
or
HSx> SHOW OTHER_CONTROLLER
HSx> SHOW DEVICES
```

If initial parameters are not set, see Sections 5.2.4 and 5.2.5 for complete procedures for defining initial parameters for your nonredundant or dual-redundant controller configuration (such as setting the controller's ID, turning on host port paths, and so forth). It would be a good idea to review those sections now to avoid potential configuration problems.

After setting your initial parameters and defining your device configurations, print the configuration and keep it available to assist in servicing the subsystem in the future. Make a new printout each time you change your configuration parameters or add or delete units or storagesets by entering the /LOG qualifier on your command line (if you are connected to a virtual terminal via DUP for OpenVMS operating systems).

Note

Use the SHOW commands listed in Appendix B to display your device and storageset configurations (SHOW DEVICES, SHOW UNITS, SHOW STRIPESETS, SHOW RAIDSETS, SHOW MIRRORSETS, and so forth).

4.6.2.1 Installing Host Port Cables for HSJ Array Controllers

Preconfigured HSJ array controller subsystems come with the internal host port cable preinstalled. When adding a second controller to a nonredundant (single) controller configuration, do the following:

- Position and route the new internal CI host port cable using the same path as the host port cable for the first controller.
- Connect the internal CI cable to the front of the controller, and tighten the captive screws on the internal CI cable where it attaches to the controller's front bezel using a flat-head screwdriver.
- Connect four external (blue) CI cables to the exiting end of the internal CI host port cable connector and then route them to the star coupler.

CAUTION

Always connect the four external (blue) CI cables to the internal CI host port cable connector *first*, then connect it to the star coupler *second*.

Never leave unterminated paths on the star coupler. *Never* leave cables, terminated or not, attached at the star coupler and disconnected at the internal CI cable connector. This minimizes adverse effects on the cluster and prevents a short circuit between the two ground references.

Figure 4–9 shows the physical attributes of an internal CI host port cable. The connection of the transmit and receive external (blue) CI cables to the PATH A connections of the internal CI cable connector also are shown.

Note

The four CI cable connections located on the exiting end of each internal CI host port cable have rubber shipping caps on each connection. Remove the rubber shipping caps before connecting the external (blue) CI cables. Keep these caps with the cabinet for later use. Follow the CI cable handling guidelines in Section 4.3.3.1.

- Remove any terminators from the star coupler connections.
- Connect the external CI cable connectors to the star coupler *one at a time, in the following order* (refer to Figure 4–9):

  RXB
  TXB
  RXA
  TXA

- Install any tie wraps as necessary to hold the internal CI host port cable in place.
- If you are not going to perform any other operations inside the cabinet, close and lock the cabinet doors (this assumes your initial controller parameters are set).

- To turn on the CI host port paths for a dual-redundant controller configuration, enter the following CLI commands:

```
CLI> SET THIS_CONTROLLER PATH_A
CLI> SET THIS_CONTROLLER PATH_B

CLI> SET OTHER_CONTROLLER PATH_A
CLI> SET OTHER_CONTROLLER PATH_B
```

If you have a single controller, use only the SET THIS commands.

4.6.2.2 Installing Host Port Cables, Trilinks, and Terminators for HSD30 Array Controllers

The following procedure describes how to connect host port cables, trilink connector blocks, and terminators for HSD30 array controllers:

1. If your HSD30 array controller's host port connector does not have a mating guide installed (refer to Figure 4–2), power down the controller shelf (if power is applied) by removing the input power cables to the power supply SBBs in the controller shelf. Take all DSSI nodes off line to remove power from the DSSI bus that will be connected to the HSD30 array controller.
2. Plug the supplied trilink connector blocks (Digital part number 12–39921–02) into the host port connector on the front bezel of each HSD30 array controller. Make sure that the trilink connector pins are not bent or damaged before installing the trilink on each HSD30 array controller's front bezel.
3. Connect the DSSI host port cables to the trilink connector block as follows:
   - If the HSD30 array controller is at the end of the DSSI bus, connect one end of the DSSI host port cable to the trilink, and connect the other end to the host computer, after plugging in a DSSI bus terminator (50-pin, part number 12–31281–01) into the other trilink connector on that controller.
   - If the HSD30 array controller occupies a midpoint position in the DSSI bus, connect the DSSI host port cables from adjacent nodes to both connectors on the trilink. The DSSI bus terminator is not used on the trilink in this configuration. The terminator is used at the end of the bus or on the second controller's trilink connector as shown in Figure 4–6, if it is at the end of the bus.

CAUTION

Before removing DSSI host port cables from the HSD30 array controller's trilink connector, remove power to all devices on the port (this includes the host adapter), *unless* your HSD30 array controller's host port connector has a mating guide installed. Some DSSI host port cable connectors are too large to allow you to remove the trilink connector block with the cables and terminator attached. In this case, you must remove power from the bus.

4. If you are not going to perform any other operations inside the cabinet, close and lock the cabinet doors (this assumes your initial controller parameters are set).

5. To turn on the DSSI host port paths, enter the following CLI commands (or command, if you are merely enabling one controller):

```
CLI> SET THIS_CONTROLLER PATH
CLI> SET OTHER_CONTROLLER PATH
```

4.6.2.3 Installing Host Port Cables, Trilinks, and Terminators for HSZ Array Controllers

The following procedure describes how to connect host port cables, trilink connector blocks, and terminators for HSZ array controllers:

1. Plug the supplied trilink connector block (part number H885–AA) into the host port connector on the front bezel of the HSZ array controller (if it is not already in place).
2. Plug the SCSI host port cable into the trilink connector on the front bezel of the HSZ array controller. Figure 4–10 shows the H885–AA trilink connector block used for HSZ array controllers.

Figure 4–10 Trilink Connector Block

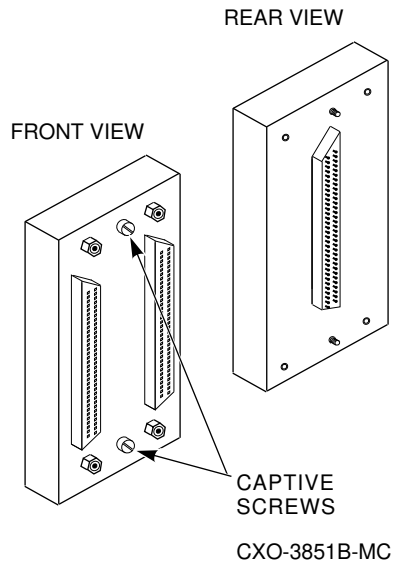

3. Plug the supplied terminator (68-pin, part number 12–37004–03, Digital option number H879–AA) into the other connector of the trilink (if this is the end of the SCSI host port bus).
4. If the host uses an 8-bit single-ended adapter, route the host port cable from the trilink connector into a DWZZA-series SCSI bus signal converter (either a 3 ½ inch SBB DWZZA–VA or a desktop DWZZA–AA model with a self-contained power supply).

   If you use a 3 ½ inch SBB DWZZA signal converter, do the following:

   - Plug a 3 ½ inch SBB DWZZA–VA signal converter into SCSI slot 0 in a BA350–SB storage shelf (the DWZZA receives its power from the shelf).
   - Plug the SCSI host port cable coming from the controller's trilink into the connector on the front of the DWZZA.
   - Plug a SCSI–P cable into the first (upper) connector in that BA350–SB storage shelf.

- Route the other end of the SCSI–P cable to the host.

If you use a desktop DWZZA–AA signal converter, do the following:

- Plug the SCSI host port cable coming from the controller's trilink into the connector on the front of the DWZZA–AA signal converter.
- Plug another SCSI host port cable into the back of the DWZZA and route the cable to the host.

5. For 16-bit FWD adapters, route the host port cable directly from the controller's trilink connector, through the cabinet, and to the host port adapter.

Refer to the *StorageWorks Solutions Shelf and SBB User's Guide* for detailed information on DWZZA-series SCSI bus signal converters. Refer to the *StorageWorks Solutions Configuration Guide* for information on the H885–AA trilink connector block.

Two important considerations for all SCSI buses are bus termination and bus length. Each bus must be terminated at each end of the bus. Maximum bus lengths must be taken into consideration when designing your subsystem configuration.

When removing SCSI host port cables, always remove the trilink connector with the host port cables and terminator attached to maintain the SCSI termination.

4.7 Creating a Dual-Redundant HS Array Controller Configuration

For HSOF versions prior to Version 1.4, you had to shut down the first controller in the controller shelf in order to install the second controller to create a dual-redundant configuration. For HSJ array controllers with firmware Version 1.4 and higher, a second controller can be added to create a dual-redundant configuration using the Controller Warm Swap Utility (C_SWAP).

For HSD30 and HSZ array controllers, the Controller Warm Swap Utility can be used to create a dual-redundant configuration provided you use (HSOF) firmware Version 2.0 or higher and an operating system version that supports dual-redundant HS array controller failover.

Note

Ensure that your HSD30 array controller's host port connector has mating guides installed before using the C_SWAP procedure. Failing to do so risks shorting circuits that may blow fuses on all the devices on the DSSI bus.

The C_SWAP utility was designed for the replacement of controller and/or cache modules in dual-redundant controller configurations. This program allows you to replace modules with power applied to the controller shelf. C_SWAP also is used for adding new controller and cache modules to a preexisting nonredundant controller configuration to form a dual-redundant configuration.

Section 5.11 describes how to use the Controller Warm Swap utility (C_SWAP). Section 5.14 provides instructions for adding a controller module and a cache module when the C_SWAP program prompts you to do so.

The second controller will occupy the SCSI ID #6 slot. The second controller will not function correctly if there are attached devices in slot 6 of any storage shelf for any port. Check that each port has no more than six SCSI–2 devices at ID numbers 0 through 5. Enter the SHOW DEVICES command and look at the Port column for each device to determine the number of devices configured on each port.

Figure 4–11 is an example of a dual-redundant HSJ40 configuration with controllers in SCSI ID slots 6 and 7.

Figure 4–11 Controller ID Numbers

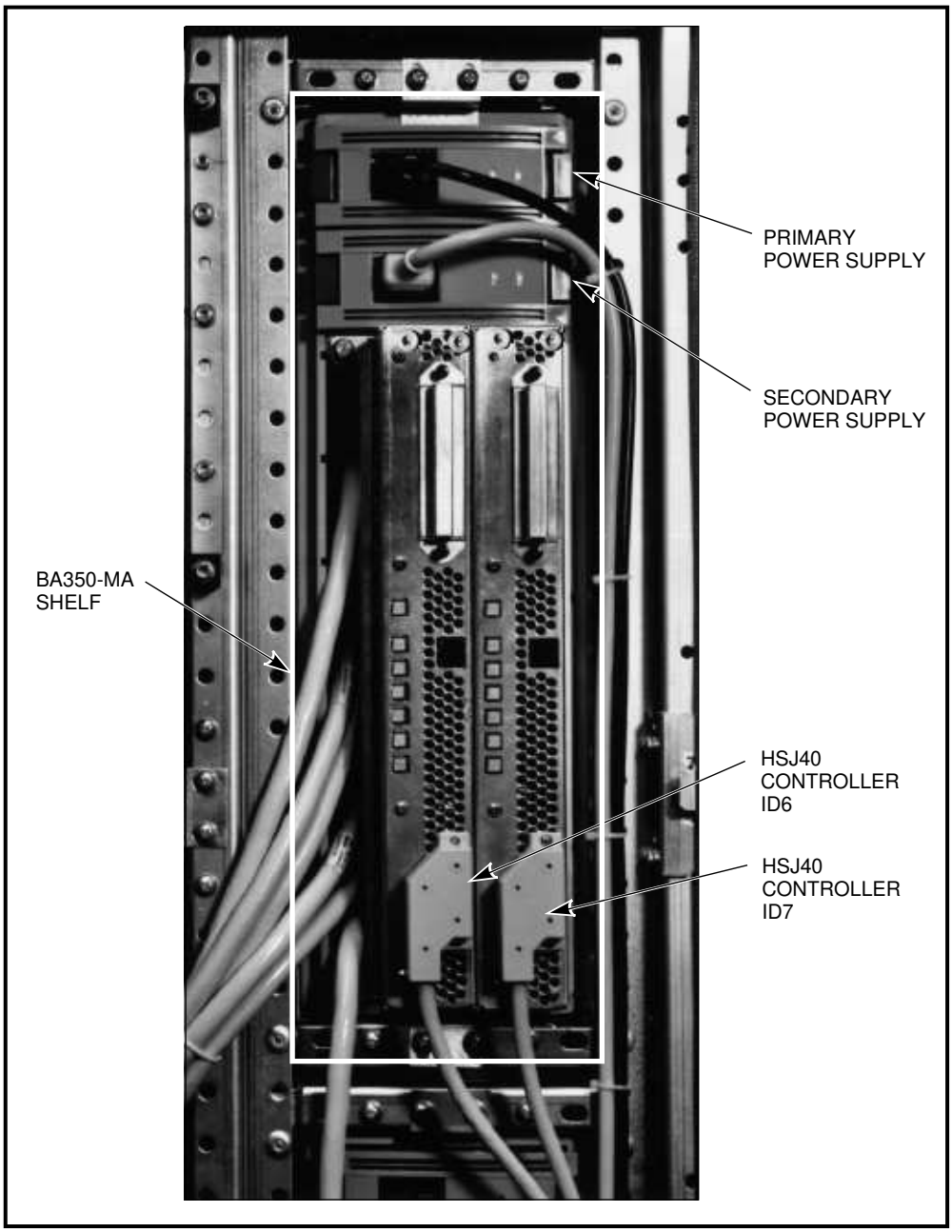

CXO-3662A_PH

CAUTION

In a dual-redundant configuration with cache modules, both cache modules must have the same number of megabytes and both must be the same cache type (both read or both write-back). The controller firmware version must be the same for both controllers for proper operation of the subsystem. When the firmware version and/or cache module sizes are mismatched, the controllers detect the mismatch and do not allow access to any devices.

When the new controller and cache modules are installed, set your initial configuration parameters for the new controller using the procedure in Section 5.2.5. Do not install your host port cables until the initial parameters are set.

4.8 Installing the Program Card

This section describes how to insert or remove the program card. Figure 4–12 shows the location of the program card and its associated eject button. An ESD shield is shown over the program card on the controller in the righthand controller position.

Insert the program cards prior to applying power to your subsystem cabinet by doing the following (the program cards may already be installed):

1. Attach an ESD grounding strap to your wrist at one end and to a cabinet grounding stud at the other end.
2. Remove the program card ESD shield by pulling the two plastic push/pull pins on each side of the shield.
3. Press and hold the reset (//) button while inserting the card into the program card slot on the controller's front bezel until the eject button is even with the edge of the card.
4. Snap the program card ESD shield in place over the program card by pressing the plastic push pins in on each side of the shield.
5. Remove the ESD grounding strap.

CAUTION

The program card must remain inserted at all times during controller operation with the ESD shield in place. If the program card is removed during operation, the controller will not function and the reset button must be used.

Figure 4–12 Program Card and Its Eject Button (ESD Shield)

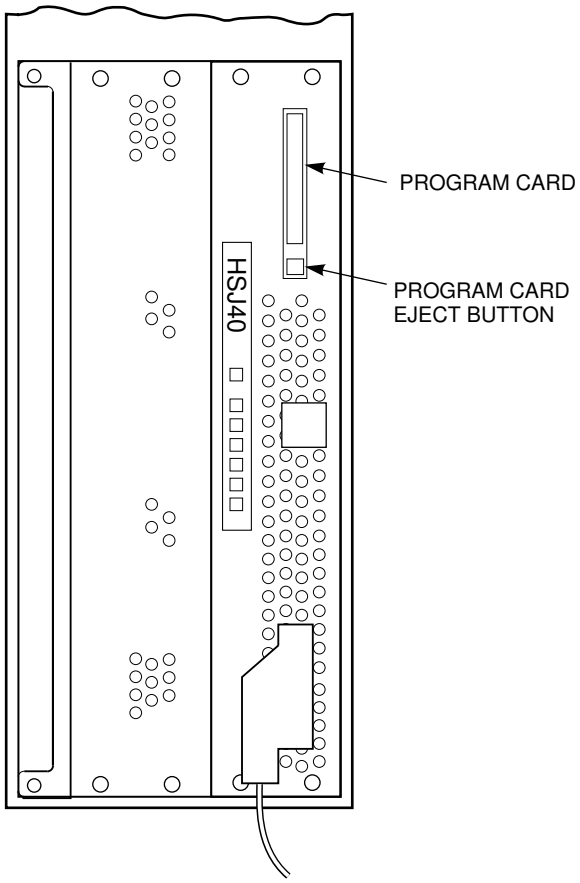

Use the following procedures to replace your program cards in the event that you wish to load new firmware or if you had to remove the program card for some reason:

Program Card Upgrade—Nonredundant Configuration

An HS operating firmware upgrade causes a brief interruption in service to attached drives. The operating system should automatically recover from this outage within a few seconds after the new firmware becomes operational and restores service.

Use the following procedure to upgrade the firmware (replace the program card) in a nonredundant controller:

1. Locate the controller to be shut down.
2. Attach an ESD grounding strap to your wrist at one end and to a cabinet grounding stud at the other end.
3. Remove the ESD shield over the program card by pulling the two plastic push/pull pins on each side of the shield.
4. Press the program card eject button to eject the old program card from the controller.
5. Remove the program card.

6. While holding the OCP reset (//) button, insert the new program card, pressing the card in until the eject button extends outward almost even with the program card, then release the reset (//) button. The controller restarts.

Note

Following the controller restart, approximately 60 seconds pass before the controller accepts CLI commands. This delay does not affect unit availability to the host. The delay provides time for controller internal configuration operations to complete before user commands change that configuration.

If the controller initializes correctly, the green reset LED will begin to flash one time per second. If an error occurs during initialization, the OCP will display a code.

7. Replace the ESD shield over the program card by pushing the two plastic push pins on each side of the shield.
8. Remove the ESD grounding strap.

Program Card Upgrade—Dual-Redundant Configuration

In dual-redundant configurations, the firmware in both controllers must be upgraded simultaneously.

Use the following procedure to upgrade the firmware (replace the program cards) of a dual-redundant controller configuration:

1. Attach an ESD grounding strap to your wrist at one end and to a cabinet grounding stud at the other end.
2. Remove the ESD shields over both program cards by pulling the two plastic push/pull pins on each side of the two shields.
3. Press the program card eject buttons on both controllers simultaneously and remove both old program cards.
4. Press and hold the OCP reset (//) buttons on both controllers while inserting new program cards. Be sure the eject buttons extend outward almost even with the edge of the cards.
5. Release the reset (//) buttons. Both controllers will restart.

   The two controllers will reinitialize concurrently and will synchronize with each other. The timing of this procedure is not critical, except that the program cards should be removed and inserted at approximately the same time (within an interval of a few seconds).

Note

Following the controller restart, approximately 60 seconds pass before the controller accepts CLI commands. This delay does not affect unit availability to the host. The delay provides time for controller internal configuration operations to complete before user commands change that configuration.

6. Replace the ESD shields over the program cards by pushing the two plastic push pins on each side of the two shields.
7. Remove the ESD grounding strap.

4.9 Upgrading Your HS Array Controller Subsystem Components

The following is a list of components that you can upgrade in your HS array controller subsystem:

- Program card—Upgrade your firmware by replacing the program card with a program card containing the new firmware version. For HSZ40–B*x* array controllers, use the CLCP utility to download new firmware.
- Cache module—Upgrade from a 16-MB read cache module to a 16- or 32-MB write-back cache module. Alternatively, you can upgrade to a 32-MB read cache module. For subsystems with no cache, upgrade to any read or write-back cache module size. (Use the C_SWAP utility to upgrade cache modules.)
- HS array controller subsystem—Upgrade by adding a second controller and cache module to form a dual-redundant controller configuration. (Use the C_SWAP utility.)

CAUTION

In a dual-redundant configuration with cache modules, both cache modules must have the same number of megabytes and be the same cache type (both read or both write-back). The controller firmware version must be the same for both controllers for proper operation of the subsystem. When the firmware version and/or cache module sizes are mismatched, the controllers detect the mismatch and do not allow access to any devices.

- Power supply—Add redundant power by adding a second power supply to your controller or storage shelves. (Refer to the *StorageWorks Solutions Configuration Guide* for power supply details.) You will also need a second cable distribution unit (CDU) to support you redundant power.
- BA350–MA shelf—Add up to four controller shelves to your SW800-series data center cabinet, or up to two controller shelves to your SW500-series cabinet.
- More storage devices—Add additional disk drives, tape drives, or other supported devices to unused slots in your storage shelves.

4.10 Upgrading Your Cache Module

You may want to upgrade your current read cache to a write-back cache module or simply to a read cache module with more megabytes. If you ordered your controller without a cache module, you can choose between a 16- or 32-MB read cache module, or a 16- or 32-MB write-back cache module. The following section describes how to determine what kind of cache module you currently have in your subsystem. This will help you to determine which option numbers to order for your upgrade. See the appropriate table for your specific controller model. Use the controller warm swap utility (C_SWAP) when upgrading your cache modules.

How to Determine Your Cache Module Type

To determine your cache module type (version type and number of megabytes), enter the SHOW THIS_CONTROLLER or SHOW OTHER_CONTROLLER command at the CLI> prompt as appropriate.

Note

The original HSJ40 array controllers shipped with Version 1 read cache modules. The HSJ30, HSD30, and HSZ array controllers all ship with Version 2 read cache modules.

You must have HS operating firmware Version 1.4 or greater to operate with a Version 2 read cache module. The Version 2 read cache modules do not operate with firmware prior to Version 1.4. However, Version 1 read cache modules operate with all versions of HS operating firmware.

Example 4–1 shows an HSJ40 array controller subsystem without a cache module:

Example 4–1 No Cache Module Installed

```
MASS>SHOW THIS_CONTROLLER
Controller:
        HSJ40 (C) DEC ZG303FF082 Firmware v25J, Hardware 0000
        Not configured for dual-redundancy
        SCSI address 7
        Time: 14-FEB-1995 15:21:10
Host port:
        Node name: MASS, valid CI node 4, 32 max nodes
        System ID 420010042D4D
        Path A is ON
        Path B is ON
        MSCP allocation class    6
        TMSCP allocation class   6
        CI_ARBITRATION = ASYNCHRONOUS
Cache:
        No cache
MASS>
```

Example 4–2 shows a controller subsystem with a Version 1 32-MB read cache module. (To upgrade to a write-back cache module you need to order a Version 2 module.)

Example 4–2 Version 1 32-MB Read Cache Module

```
HSJ>SHOW THIS_CONTROLLER
Controller:
        HSJ40 (C) DEC CX01234561 Firmware V25J, Hardware 0000
        Not configured for dual-redundancy
        SCSI address 7
        Time: 14-FEB-1995 15:21:10
Host port:
        Node name: HSJA7, valid CI node 29, 32 max nodes
        System ID 4200101DF52F
        Path A is ON
        Path B is ON
        MSCP allocation class    3
        TMSCP allocation class   3
        CI_ARBITRATION = ASYNCHRONOUS
Cache:
        32 megabyte read cache, version 1
        Cache is GOOD
        CACHE_POLICY= A
HSJ>
```

Example 4–3 shows a controller subsystem with a Version 2, 32-MB write-back cache module:

Example 4–3 Version 2 32-MB Write-Back Cache Module

```
KATHYM>SHOW THIS_CONTROLLER

Controller:
        HSJ40 (C) DEC ZG313FF106 Firmware V25J, Hardware 0000
        Configured for dual-redundancy with ZG31900458
            In dual-redundant configuration
        SCSI address 7
        Time:  14-FEB-1995 15:21:10
Host port:
        Node name: HSJA1, valid CI node 3, 32 max nodes
        System ID 420010031B85
        Path A is ON
        Path B is ON
        MSCP allocation class    4
        TMSCP allocation class   4
        CI_ARBITRATION = ASYNCHRONOUS
Cache:
        32 megabyte write cache, version 2
        Cache is GOOD
        Battery is GOOD
        Unflushed data in cache
        CACHE_FLUSH_TIMER = DEFAULT (10 seconds)
        CACHE_POLICY= A
KATHYM>
```

As you can see, the cache module size and version are displayed, as well as the status of the cache module and the write-back cache module batteries. You need to know the version type to determine what option numbers to order for your upgrade.

See Tables 4–3 through 4–6 for ordering information.

Note

Version 1 read cache modules cannot be upgraded to write-back cache modules. These modules must be returned to Digital after ordering the proper options.

Table 4–3 Read and Write-Back Cache Upgrade Ordering Information for HSJ40 Array Controllers

If you have...[1]	And you want...	Order...
HSJ40 Version 1 16-MB read cache	32-MB read cache 16-MB write-back cache 32-MB write-back cache	HSJ40–XE HSJ40–YA HSJ40–XE and HSJ40–YC
HSJ40 Version 1 32-MB read cache	32-MB write-back cache	HSJ40–YB
HSJ40 Version 2 16-MB read cache	16-MB write-back cache 32-MB read cache 32-MB write-back cache	HSJ40–YC HSJ40–XE HSJ40–XE and HSJ40–YC
HSJ40 Version 2 32-MB read cache	32-MB write-back cache	HSJ40–YC
HSJ40 Version 2 16-MB write-back cache	32-MB write-back cache	HSJ40–XE (use batteries from 16 MB module)

[1]All Version 2 cache modules used in HSJ40 array controller subsystems require Version 1.4 or greater HS operating firmware.

Table 4–4 Read and Write-Back Cache Upgrade Ordering Information for HSJ30 Array Controllers

If you have...	And you want...	Order...
HSJ30 with no cache	16-MB read cache 32-MB read cache 16-MB write-back cache 32-MB write-back cache	HSJ30–XD HSJ30–XF HSJ30–XD and HSJ30–YC HSJ30–XF and HSJ30–YC
HSJ30 Version 2 16-MB read cache	16-MB write-back cache 32-MB read cache 32-MB write-back cache	HSJ30–YC HSJ30–XE HSJ30–XE and HSJ30–YC
HSJ30 Version 2 32-MB read cache	32-MB write-back cache	HSJ30–YC
HSJ30 Version 2 16-MB write-back cache	32-MB write-back cache	HSJ30–XE (use batteries from 16-MB module)

Table 4–5 Read and Write-Back Cache Upgrade Ordering Information for HSD30 Array Controllers

If you have...	And you want...	Order...
HSD30 with no cache	16-MB read cache 32-MB read cache 16-MB write-back cache 32-MB write-back cache	HSD30–XD HSD30–XF HSD30–XD and HSD30–YX HSD30–XF and HSD30–YX
HSD30 Version 2 16-MB read cache	32-MB read cache 16-MB write-back cache 32-MB write-back cache	HSD30–XE HSD30–YX HSD30–XE and HSD30–YX
HSD30 Version 2 32-MB read cache	32-MB write-back cache	HSD30–YX
HSD30 Version 2 16-MB write-back cache	32-MB write-back cache	HSD30–XE (use batteries from 16 MB module)

Table 4–6 Read and Write-Back Cache Upgrade Ordering Information for HSZ40–A*x* and HSZ40–B*x* Array Controllers

If you have...	And you want...	Order...
HSZ40 with no cache	16-MB read cache	HSZ40–XD
	32-MB read cache	HSZ40–XF
	16-MB write-back cache	HSZ40–XD and HSZ40–YX
	32-MB write-back cache	HSZ40–XF and HSZ40–YX
HSZ40 Version 2 16-MB read cache	32-MB read cache	HSZ40–XE
	16-MB write-back cache	HSZ40–YX
	32-MB write-back cache	HSZ40–XE and HSZ40–YX
HSZ40 Version 2 32-MB read cache	32-MB write-back cache	HSZ40–YX
HSZ40 Version 2 16-MB write-back cache	32-MB write-back cache	HSZ40–XE (use batteries from 16 MB module)

Note

Return all 16-MB read cache modules to Digital when ordering 32-MB read cache module upgrades.

Refer to Appendix A for descriptions of the various upgrade and option numbers.

5
Controller Operations

5.1 HS Array Controller Initialization

The HS array controller is initialized by any one of the following actions:

- A power-up cycle
- A firmware reset
- By pressing the OCP reset (//) button on the front bezel of the HS array controller
- From a host clear (or bus INIT)

The following action may initialize the controller, but it is not supported:

- When the operator removes and replaces the program card while the controller is running [1]

Whenever the controller initializes, it steps through a three-phase series of tests designed to detect any hardware or firmware faults. These are the three tests:

- Built-in self-test
- Core module integrity self-test
- Module integrity self-test DAEMON

Initialization time varies depending on the model of your controller and the size of your cache module, if any.

Note

Beginning with HSOF Version 2.5, a 60-second delay will occur following controller restart operations before the CLI becomes active. During this time, the devices are available to the host, but you will not be able to enter any CLI commands.

[1] Occasionally, this does not force initialization, so the controller shows no activity. If this occurs, press the green reset (//) button to initialize the controller.

Figure 5–1 details the initialization process for both single and dual-redundant controller configurations.

Figure 5–1 Controller Initialization Flow Chart

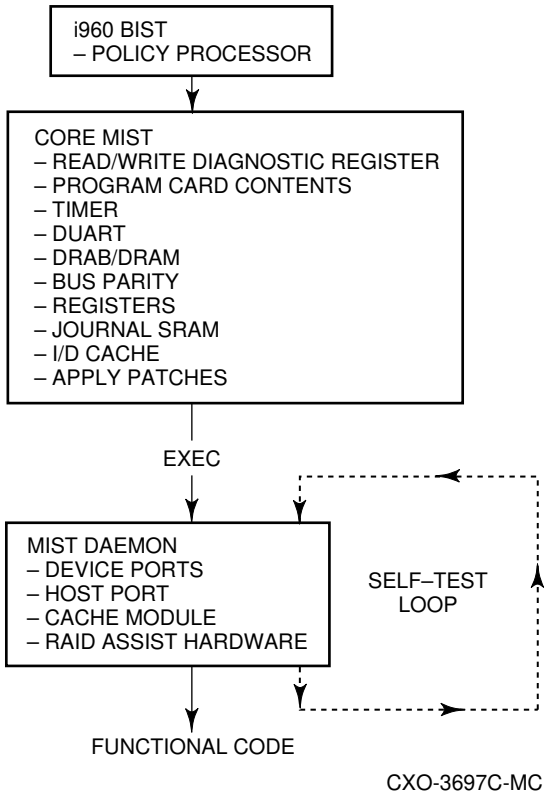

The initialization begins when the policy processor on the controller module executes a built-in self test (BIST). If BIST fails, the controller shows no activity and all indicators on the OCP are off. When this self-test completes, the policy processor reads the hardware setup parameters and process control information from the nonvolatile memory. After these parameters are located, the following sequence executes:

1. A set of minimum integrity diagnostics (MIST) are run to verify that the bus hardware is functional, the program card contents are valid, and that shared memory is good.

   When testing shared memory, the first 2 MB must test good; the remainder of the memory can have up to 16 bad areas before the entire memory is declared bad.

   When MIST is complete, the program copies the controller firmware from the program card to the first 2 MB of shared memory, using error correction code (ECC) to correct program card errors when possible. Control is then passed to the firmware executive. If a fault occurs at any time during core MIST, the OCP displays an error code.

2. The firmware executive (EXEC) initializes and a call is made to the diagnostic and execution monitor (DAEMON) to complete the subsystem self-test diagnostics. When executing these diagnostics, DAEMON uses the services provided by the EXEC to handle any interrupts and errors generated during the tests. Errors detected during these tests are displayed on the OCP LEDs. The diagnostics run by DAEMON include the following:

   - **A test of the host port**—The controller still becomes operational if this port is not functioning.
   - **A test of the device ports**—The controller still becomes operational if one or more of its device ports are not functioning. However, if *all* of the SCSI–2 ports are unresponsive, the controller does not initialize.
   - **A test of the memory devices on the cache module**—Only 1 MB of the memory must test valid for the cache module to be operational. However, if the cache module fails, the controller still functions by using a portion of shared memory for minimal read caching operations.

     The remainder of cache is tested after initialization, in the background during normal operation.

3. The EXEC finishes the initialization and starts the functional firmware on the controller.

If a hard failure occurs anytime during the initialization sequence, the controller OCP LEDs display an error indication.

CAUTION

The program card must remain in its slot for continuous controller subsystem operations. If the program card is removed during normal operations, the controller automatically resets.

5.1.1 Dual-Redundant Controller Configuration Initialization Sequence

The two controllers in a dual-redundant configuration exchange messages during their individual initialization sequences. The first message occurs just after the first controller starts initializing. This message informs the other controller that an initialization is taking place, so that the other controller does not assume that the initializing controller is malfunctioning and does not attempt to disable it.

5.1.2 Controller Subsystem Initialization

When the controller is part of a StorageWorks subsystem, controller initialization takes place during power-up. In the event of a reset due to a partial or complete power failure, equipment failure, error condition, or a host clear, a subset of the initialization sequence runs in the subsystem.

A complete StorageWorks subsystem initialization includes the following steps:

1. When turning on the power, all shelves in the subsystem are reset and entities in the shelves, including SBB devices, controller, and cache modules, begin their initialization sequences.
2. Each entity then completes its initialization and self-tests as applicable.

3. During the initialization, the controller interrogates the entities that it has established connections with, including other controllers in the subsystem. The controllers can perform activities with the entities, such as illuminating the device activity LED (green) on a disk drive's carrier while the drive is spinning up or down.
4. When the initialization sequence on all entities completes, the controller begins data transfer and other operations with the hosts.

5.1.3 Controller Cache Module Initialization Sequence

As part of the controller's diagnostics, the firmware tests the cache module. Upon completion of these tests, the cache module is available for use. This is a two-stage test: a minimum test plus a post-initialization background test. At least the first megabyte of the memory must test good, or the cache will be declared inoperative.

5.2 Command Line Interpreter

The command line interpreter (CLI) is the user interface to the controller. The CLI allows you to interrogate or modify the controller's configuration by using CLI commands. The following sections explain how to define a configuration and modify it when needed. Detailed descriptions of the CLI commands are given in Appendix B.

Note

Initial controller parameters must be set using a terminal connected to the maintenance terminal port on the front of the controller. This is because the controller has an invalid ID and the host port paths are initially turned off (except for HSZ controllers whose host port paths are always on).

Thereafter (for HSJ and HSD30 controllers), a virtual terminal can be used to modify the controller's configuration via a DUP virtual terminal connection. For HSZ controllers, a HSZterm virtual terminal connection can be used.

In a dual-redundant controller configuration, one terminal can control both controller's configurations. Refer to the SET FAILOVER command in Appendix B (and Section 2.3) for information on how this can be done.

5.2.1 CLI Access

After initial configuration, you can access the CLI using a maintenance terminal or a virtual terminal. The actual method of establishing the virtual terminal connection varies depending on your operating system and interface type. Refer to Section 8.3.1 for the method for establishing a virtual terminal connection (for HSJ and HSD30 controllers) when using the OpenVMS operating system.

Note

The CLI> prompt may be factory-set to reflect your array controller's model, such as, HSJ>, HSD>, or HSZ>. Use either the SET THIS_CONTROLLER or SET OTHER_CONTROLLER command with the PROMPT= qualifier if you want to set your prompt name (see Appendix B) to something other than the factory setting.

5.2.2 CLI Command Sets

CLI consists of the following six command sets:

1. CLI failover commands—These commands are used to support dual-redundant controller configurations.
2. CLI controller commands—These commands are used for the following:
   a. Modifying and displaying the basic controller parameters
   b. Modifying the controller ID (CI or DSSI node number, or SCSI target IDs)
   c. Modifying the resident terminal characteristics
   d. Restarting the controller
   e. Running resident diagnostics and utility programs
3. CLI device commands—These commands allow you to specify and show the location of the *physical* SCSI–2 devices attached to each controller. Locations of devices are specified using their SCSI port/target/LUN (PTL) designation.

   Note

   Only devices that have been defined by the ADD command are recognized by the controller. Devices that have been placed in a storage shelf, but have not been defined using the ADD command are NOT recognized by the controller. Locations of devices are specified using a Port-Target-LUN (**PTL**) format. Other restrictions may apply when adding removable media devices.

4. CLI storageset commands—These commands are used for the following:
   a. Adding storagesets (stripesets, RAIDsets, mirrorsets)
   b. Modifying (setting) storagesets
   c. Renaming storagesets
   d. Interrogating storageset attributes
5. CLI logical unit commands—These commands are used to add, modify, or display logical units that have been built from devices or storagesets.
6. CLI diagnostic and utility commands—These commands are used run local utility programs on the controller.

   They are used to invoke exercisers that test the data transfer capabilities of disk and tape drives. The two exercisers are DILX (a disk inline exerciser) and TILX (a tape exerciser). Refer to Chapter 7 for examples of DILX and TILX displays. Refer to the *StorageWorks Array Controllers HS Family of Array Controllers Service Manual* for details on how to run these

exercisers. There are additional commands used to run local programs such as, CFMENU, FLS, and so forth.

Remember these two rules when using the CLI:

- Not all configuration parameters need to be specified on one line. They can be entered by using multiple SET commands.
- Only enough of each command needs to be entered to make the command unique (usually three characters). For example, SHO is equivalent to SHOW.

5.2.3 How to Exit CLI

If you are using a maintenance terminal, you cannot exit the CLI. Entering the EXIT command merely restarts the CLI and redisplays the controller type, and the last fail error information as shown in Example 5–1:

Example 5–1 CLI EXIT Command Message

```
CLI> EXIT

Copyright Digital Equipment Corporation 1993, 1995. All rights reserved.
HSJ40 Firmware version V25J, Hardware version 0000

Last fail code: 018800A0

Press " ?" at any time for help.

CLI>
```

If you are using a DUP connection for the CLI, type EXIT after the CLI prompt to return control to the host.

If you are connected to a virtual terminal via DUP for OpenVMS, and you specified the /LOG qualifier on your command line, a log file of your session in CLI is created. You must use the EXIT command to exit the CLI in order to print the log file.

5.2.4 Setting Configuration Parameters for a Nonredundant Controller Configuration

If you have a nonredundant controller configuration, perform the following steps at initial installation (or when replacing a failed controller module) to set up your controller's configuration parameters from the CLI.

Define the configuration in the following order from a maintenance terminal connected to the terminal port connector on the front bezel of your controller. Not all steps are applicable to each controller model. Therefore, each step in the following procedure lists applicable models for that step.

CAUTION

Do not install the host port cables for your new controller until after you have set all of the initial parameters. Failure to follow this process may result in adverse effects on the host/cluster. Follow the specific rules for your controller model regarding the application of power when installing host cables.

1. Set the MAX_NODES parameter (**HSJ controllers only**):

   ```
   CLI> SET THIS_CONTROLLER MAX_NODES=n
   ```

   where *n* is 8, 16, or 32.

2. Set a valid ID for the controller (**all controller models**):

   ```
   CLI> SET THIS_CONTROLLER ID=n
   ```

   Where *n* has the following values:

   - The **HSJ** controller's CI node number (0 through (MAXNODES-1)).

   CAUTION

   If the CI node number, but not the SCS node name, is changed, a complete VMScluster system reinitialization must be performed before the controller and its attached devices will be recognized.

   It is not necessary to change the CI node number or the SCS node name when upgrading from earlier HSOF versions to Version 2.5.

   - The **HSD30** controller's one digit DSSI node number (0 through 7). Each HSD30 controller's DSSI node number must be unique for its DSSI interconnect configuration.
   - The **HSZ** controller's SCSI target IDs (0 through 7). Up to four SCSI target IDs may be set for a single controller. To set multiple ID numbers enter the following command:

     ```
     CLI> SET THIS_CONTROLLER ID=n,n,n,n
     For example:
     CLI> SET THIS_CONTROLLER ID=0,1,4,5
     ```

     If two or more target IDs are specified, they must be enclosed in parenthesis and separated by commas.

3. Set the SCS node name (**HSJ and HSD30 controllers**):

   ```
   CLI> SET THIS_CONTROLLER SCS_NODENAME="xxxxxx"
   ```

   where *xxxxxx* is a one- to six-character alphanumeric name for this node and must be enclosed in quotes with an alphabetic character first.

   Note

   Each HSJ or HSD30 controller SCS node name must be unique within its VMScluster system.

4. Set the MSCP allocation class (**HSJ and HSD30 controllers**):

   ```
   CLI> SET THIS_CONTROLLER MSCP_ALLOCATION_CLASS=n
   ```

   where *n* is 0 through 255 in a single controller configuration.

5. Set the TMSCP allocation class (**HSJ and HSD30 controllers**):

   ```
   CLI> SET THIS_CONTROLLER TMSCP_ALLOCATION_CLASS=n
   ```

   where *n* is 0 through 255 in a single controller configuration.

6. Restart the controller by pressing the OCP reset (//) button on the controller's front bezel, or enter the following command at the CLI> prompt to restart the controller (*for all controller models:*)

   ```
   CLI> RESTART THIS_CONTROLLER
   ```

7. Enter the SHOW THIS_CONTROLLER command to determine whether the preceding parameters are set correctly (*for all controller models:*)

   ```
   CLI> SHOW THIS_CONTROLLER FULL
   ```

8. Enable the host port paths (**HSJ controllers**):

   ```
   CLI> SET THIS_CONTROLLER PATH_A
   CLI> SET THIS_CONTROLLER PATH_B
   ```

   Enter the following command at the CLI> prompt to enable host port paths **for HSD30 controllers**:

   ```
   CLI> SET THIS_CONTROLLER PATH
   ```

   Note

   You can enter the following command at the CLI> prompt to disable the host port paths for HSD30 controllers when it is necessary:

   ```
   CLI> SET THIS_CONTROLLER NOPATH
   ```

   The host port paths **for HSZ controllers** are always on, so a command does not exist for turning its host paths on or off.

   Note

   Always restart the controller after setting the controller's ID, the SCS node name, or the allocation classes by pressing the OCP reset (//) button on the controller's front bezel, or by entering the appropriate RESTART command at the CLI> prompt.

9. Connect internal and external host port cables, trilink connector blocks, and terminators as applicable. Refer to the appropriate sections in Chapter 4 for instructions for making these connections for your controller model.

   CAUTION

   For HSD30 array controllers:

   Unless you have a mating guide (refer to Chapter 4) installed on the HSD30 controller's host port connector, you must turn off all power to HSD30 controllers and all other devices, including the host CPU, on a DSSI bus before connecting or disconnecting a DSSI host port cable.

   Without the mating guide, if you accidentally short DSSI connector pins during aligning and connecting/disconnecting the connector, you risk blowing the fuses of *all* members of the DSSI bus.

   With the mating guide installed, you may disconnect or connect the DSSI host port cable connector with power applied to the controller and other members on the host bus. However, Digital recommends carefully

connecting or disconnecting the DSSI connector *at all times*, even if you have the mating guide installed.

Defining Devices and Storagesets

The following steps configure devices into storagesets and storagesets into logical units seen by the host. If these steps are not completed, the host cannot access any devices. These steps can be done from a virtual (host) terminal, or from the same maintenance terminal that you used to set initial parameters.

To automatically add or configure devices on the controller, use either the Configure (CONFIG) utility or CFMENU utility described in Chapter 7. For manual configuration, use the following steps (*for all controller models*):

Note

HSZ array controllers do not support tapes, loader, optical drives, or CD–ROM readers.

---

1. Add physical devices by using the following commands:

   ```
   CLI> ADD device-type device-name scsi-location
   ```

   For example:

   ```
   CLI> ADD DISK DISK0 1 0 0
   CLI> ADD TAPE TAPE0 4 1 0
   CLI> ADD LOADER LOAD0 5 1 1
   CLI> ADD CDROM CDROM0 6 0 0
   ```

   where:

   device-type is the type of device to be added. This can be DISK, TAPE, CD–ROM, or LOADER.

   device-name is the name to refer to that device. The name is referenced when creating units or storagesets.

   SCSI-location is the controller's port, target, and LUN for the device. (When typing the port, target, and LUN designations, at least one space must separate the port, target, and LUN numbers.)

   You can use the ADD *device-type* command anytime you need to add a device to the configuration.

   Note

   If you add a removable media device to an **HSJ or HSD30** controller, it is not known to the host until one of the following occurs: the media is loaded into the device, the host is reinitialized, or the virtual circuit is broken and reestablished.

   Remember that CD–ROMs are always set TRANSPORTABLE and are seen by the OpenVMS operating system as DKA devices.

---

2. Add storagesets by using commands similar to the following:

```
CLI> ADD STRIPESET container-name container-name1 ...
CLI> ADD RAIDSET container-name container-name1 ...
CLI> ADD MIRRORSET container-name container-name1 ...
```

For example:

```
CLI> ADD STRIPESET STRIPE0 DISK0 DISK1 DISK2 DISK3
CLI> ADD RAIDSET RAID99 DISK4 DISK5 DISK6
CLI> ADD MIRRORSET MIRR1 DISK7 DISK8 DISK9
```

Refer to Chapter 6 and Appendix B for examples for adding storagesets. If you do not need storagesets for your configuration, skip this step.

3. Enter the INITIALIZE command to initialize *containers* (devices or storagesets) prior to using them for host units. Refer to Section 5.3 for details about initializing transportable and nontransportable disk drives and CD–ROMs.

```
CLI> INITIALIZE container-name
```

For example:

```
CLI> INITIALIZE DISK0
CLI> INITIALIZE STRIPE0
CLI> INITIALIZE RAID99
CLI> INITIALIZE MIRR1
```

CAUTION

The INITIALIZE command destroys all host-accessible data on the container. Refer to the Appendix B INITIALIZE command section of this manual for specific requirements for using this command.

When initializing a single disk drive container, if the NOTRANSPORTABLE qualifier was specified (or allowed to default) on the ADD DISK or SET *disk-name* commands, a small amount of disk space is made inaccessible to the host and used for metadata. However, if the TRANSPORTABLE qualifier was specified, any metadata is destroyed on the device and the full device is accessible to the host. Refer to Appendix B for details of when initializing is required and when it is not required.

4. Add the units that use either the devices directly or the storagesets built from the devices by entering the following command at the CLI> prompt:

```
CLI> ADD UNIT logical-unit-number container-name
```

```
For example:  ADD UNIT D300 DISK0
              ADD UNIT D200 RAID99
```

where:

logical-unit-number is the unit number the host uses to access the device.

container-name identifies the device or the storageset.

5.2.5 Setting Configuration Parameters for a Dual-Redundant Controller Configuration

If you have a new dual-redundant controller configuration, perform the following steps at initial installation to set up your controller's configuration parameters.

Define the configuration in the following order from a maintenance terminal connected to the maintenance terminal port connector on the front bezel of your array controller:

CAUTION

Do not install the host port cables for your new or replacement controllers until after you have set all of the initial parameters. Failure to follow this process may result in adverse effects on your system.

1. Set the MAX_NODES parameter on both controllers (**HSJ controllers only**):

   ```
   CLI> SET THIS_CONTROLLER MAX_NODES=n
   CLI> SET OTHER_CONTROLLER MAX_NODES=n
   ```

   where *n* is 8, 16, or 32.

2. Set a valid ID number for both controllers (**HSJ and HSD30 controllers**):

   ```
   CLI> SET THIS_CONTROLLER ID=n
   CLI> SET OTHER_CONTROLLER ID=n
   ```

   Where *n* has the following values:

   - The **HSJ** controller's CI node number (0 through (MAXNODES –1)).
   - The **HSD30** controller's one digit DSSI node number (0 through 7). Each HSD30 controller's DSSI node number must be unique for its DSSI interconnect configuration.
   - **HSZ Array Controllers**: For HSZ array controllers, you must *first* set the number of SCSI target IDs (0 through 7). You may specify up to four unique SCSI target IDs for a dual-redundant controller configuration. This allows support for up to 32 logical units (LUNs), 8 LUNs per target. When specifying two or more IDs, enclose the target numbers in parentheses and separate the target numbers by commas as follows:

     ```
     CLI> SET THIS_CONTROLLER ID=(n,n)
     CLI> SET OTHER_CONTROLLER ID=(n,n)
     ```

Note

The controller's firmware assigns a default SCSI target ID of 2 to new HSZ controllers. After installation and power up, change the SCSI target ID number to something appropriate for your subsystem's configuration. (There is a chance that SCSI target ID 2 is already assigned to another device.)

3. Set the SCS node names for both controllers (**HSJ and HSD30 controllers**):

   ```
   CLI> SET THIS_CONTROLLER SCS_NODENAME="xxxxxx"
   CLI> SET OTHER_CONTROLLER SCS_NODENAME="xxxxxx"
   ```

where *xxxxxx* is a one- to six-character alphanumeric name for this node that must be enclosed in quotation marks and begin with an alphabetic character.

Note

Each HSJ or HSD30 controller's SCS node name must be unique within its VMScluster system.

4. Set the MSCP allocation class on both controllers (**HSJ and HSD30 controllers**):

Note

Provide different (unique) allocation class values for every pair of dual-redundant controllers in the cluster. In a dual-redundant controller configuration, the allocation class must not be zero, otherwise, failover does not occur.

```
CLI> SET THIS_CONTROLLER MSCP_ALLOCATION_CLASS=n
CLI> SET OTHER_CONTROLLER MSCP_ALLOCATION_CLASS=n
```

where *n* is 1 through 255 in a dual-redundant controller configuration.

5. Set the TMSCP allocation class on both controllers (**HSJ and HSD30 controllers**):

```
CLI> SET THIS_CONTROLLER TMSCP_ALLOCATION_CLASS=n
CLI> SET OTHER_CONTROLLER TMSCP_ALLOCATION_CLASS=n
```

where *n* is 1 through 255 in a dual-redundant controller configuration.

6. Set failover by entering the following command at the CLI> prompt (**HSJ, HSD30, and HSZ controllers**):

Note

The SET FAILOVER command places THIS_CONTROLLER and the OTHER_CONTROLLER in a dual-redundant configuration. After entering this command, if one of the two controllers fail, the devices and cache (if any) attached to the failed controller become available to and accessible through the operating controller.

If you have a dual-redundant controller configuration, enter this command on one controller only. The COPY= qualifier should specify where the ''good'' data is located. Do not blindly specify COPY=THIS_CONTROLLER. Know where your ''good'' configuration information resides before entering the command.

```
CLI> SET FAILOVER COPY=THIS_CONTROLLER
```

Refer to Section 2.3 for a detailed explanation of failover, the COPY= qualifier, and cautions for using THIS_CONTROLLER and OTHER_CONTROLLER commands with a dual-redundant pair of controllers.

7. (**All controller models:**) Restart both controllers by pressing the OCP reset (//) button on each controller's front bezel, or enter the following commands at the CLI> prompt in the sequence given:

```
CLI> RESTART OTHER_CONTROLLER
CLI> RESTART THIS_CONTROLLER
```

8. Enter the following commands at the CLI> prompt to determine whether the preceding parameters are set correctly (**all controller models**):

```
CLI> SHOW THIS_CONTROLLER FULL
CLI> SHOW OTHER_CONTROLLER FULL
```

9. Enable the host port paths for both controllers (**HSJ controllers**).

   Enter the following commands at the CLI> prompt to enable CI Path A and Path B to the host:

```
CLI> SET THIS_CONTROLLER PATH_A
CLI> SET THIS_CONTROLLER PATH_B
CLI> SET OTHER_CONTROLLER PATH_A
CLI> SET OTHER_CONTROLLER PATH_B
```

   Enter the following commands at the CLI> prompt to enable the host port paths for **HSD30 controllers**:

```
CLI> SET THIS_CONTROLLER PATH
CLI> SET OTHER_CONTROLLER PATH
```

   HSZ controller host port paths are always on, so no command is needed.

Note

Always restart the controller after setting the controller's ID, the SCS node name, or the allocation class by pressing the OCP reset (//) button on the controller's front bezel, or by entering the RESTART command at the CLI> prompt.

10. **HSJ and HSD30 Array Controllers:** Set preferred paths to balance units between controllers for better performance in a dual-redundant configuration. Using preferred paths maintains unit-to-controller assignments when dual-redundant pairs are restored from a failover condition. Use the following command:

```
CLI> SET unit PREFERRED_PATH= THIS_CONTROLLER
```

or

```
CLI> SET unit PREFERRED_PATH= OTHER_CONTROLLER
```

Faults that are external to an HSJ or HSD30 array controller in a dual-redundant pair (for example, when the CI path fails), do not allow for proper failover if preferred paths are active. To correct this problem, enter the SHUTDOWN OTHER_CONTROLLER command from the unaffected controller, which forces failover to occur.

Note

Preferred paths apply only to disk-based units or optical disk library units. Do not attempt to use preferred paths with tape or CD–ROM-based units.

11. **HSZ Array Controllers:** Set preferred paths to balance the load and improve the performance of your HSZ array controller as follows:

    After setting the total number of SCSI target IDs for the pair, set the preferred IDs to define which targets will be assigned to each controller. Enclose the target numbers in parentheses and separate each target number by commas as follows:

    ```
    CLI> SET THIS_CONTROLLER PREFERRED_ID=(n,n)
    CLI> SET OTHER_CONTROLLER PREFERRED_ID=(n,n)
    ```

    You may only specify the preferred IDs that were first set with the SET THIS_CONTROLLER ID= and SET OTHER_CONTROLLER ID= commands. A maximum of four IDs may be specified in any combination between the two controllers. If two or more PREFERRED_IDs are set, enclose the IDs in parentheses and separate each ID number by a comma. When you change the preferred IDs on one controller in the pair, the other controller is automatically updated to the remaining (if any) IDs.

12. **HSZ Array Controllers:** Use the NOPREFERRED_ID= qualifier if you decide *not* to set preferred IDs as follows:

    ```
    CLI> SET THIS_CONTROLLER NOPREFERRED_ID

    or

    CLI> SET OTHER_CONTROLLER NOPREFERRED_ID
    ```

    By specifying the NOPREFERRED_ID qualifier, the controller with NOPREFERRED_ID set does not respond to any target ID on the host's SCSI bus. However, in a dual-redundant configuration, if the controller with PREFERRED_ID set fails, the controller with NOPREFERRED_ID set takes over the targets of the failed controller.

13. (**All controller models:**) Connect internal and external host port cables, trilink connector blocks, and terminators as applicable. Refer to the appropriate sections in Chapter 4 for instructions for making these connections.

CAUTION

For HSD30 array controllers:

Unless you have a mating guide (refer to Chapter 4) installed on the HSD30 controller's host port connector, you must turn off all power to HSD30 controllers and all other devices, including the host CPU, on a DSSI bus before connecting or disconnecting a DSSI host port cable.

Without the mating guide, if you accidentally short DSSI connector pins during aligning and connecting/disconnecting the connector, you risk blowing the fuses of *all* members of the DSSI bus.

With the mating guide installed, you may disconnect or connect the DSSI host port cable connector with power applied to the controller and other members on the host bus. However, Digital recommends carefully connecting or disconnecting the DSSI connector *at all times*, even if you have the mating guide installed.

Some DSSI host port cable connectors are too large to allow access to the trilink connector screws. You must remove the trilink with the host port

cables attached to warm swap your HSD30 array controller. You cannot perform controller warm swap if you have this situation.

Defining Devices and Storagesets

To automatically configure devices on the controller, use either the Configure (CONFIG) utility or CFMENU utility described in Chapter 7 (*for all controller models*).

For manual configuration, the following steps add devices, storagesets, and logical units. If these steps are not completed, the host cannot access the devices. These steps can be done from a virtual (host) terminal.

Note

HSZ array controllers do not support tapes, loader, optical disks, and CD–ROM readers.

---

1. (**For all controller models:**) Add the *physical* devices by using the following CLI commands:

   ```
   CLI> ADD device-type device-name scsi-location
   ```

   For example:

   ```
   CLI> ADD DISK DISK0 1 0 0
   CLI> ADD TAPE TAPE0 5 1 0
   CLI> ADD CDROM CDROM0 6 0 0
   ```

   where:

   device-type is the type of device to be added. This can be disk, tape, CD–ROM, or loader.

   device-name is your name to refer to that device. The name is referenced when creating units or storagesets.

   SCSI-location is the controller's port, target, and LUN for the device. (When typing the PTL designations, at least one space must separate the port, target, and LUN numbers.)

   You can use the ADD *device-type* command anytime you need to add a device to the configuration.

2. (**For all controller models:**) Add storagesets by using commands similar to the following:

   ```
   CLI> ADD STRIPESET container-name container-name1 ...
   CLI> ADD RAIDSET container-name container-name1 ...
   CLI> ADD MIRRORSET container-name container-name1 ...
   ```

   For example:

   ```
   CLI> ADD STRIPESET STRIPE0 DISK0 DISK1 DISK2 DISK3
   CLI> ADD RAIDSET RAID99 DISK4 DISK5 DISK6
   CLI> ADD MIRRORSET MIRR1 DISK7 DISK8 DISK9
   ```

Refer to Chapter 6 and Appendix B for examples for adding storagesets. If you do not need storagesets for your configuration, skip this step.

Note

If you add a removable media device to an **HSJ or HSD30** controller, it is not known to the host until one of the following occurs: the media is loaded into the device, the host is reinitialized, or the virtual circuit is broken and reestablished.

Remember that CD–ROMs are always set TRANSPORTABLE and are seen by the OpenVMS operating system as DKA devices.

3. (**For all controller models:**) Enter the INITIALIZE command to initialize *containers* (devices or storagesets) prior to using them for host units. Refer to Section 5.3 for details about initializing transportable and nontransportable disk drives.

```
CLI> INITIALIZE container-name
```

For example:

```
CLI> INITIALIZE DISK0
CLI> INITIALIZE STRIPE0
CLI> INITIALIZE RAID99
CLI> INITIALIZE MIRR2
```

CAUTION

The INITIALIZE command destroys all host-accessible data on the container. Refer to the Appendix B INITIALIZE command section of this manual for specific requirements for using this command.

When initializing a single disk drive container, if NOTRANSPORTABLE was specified or (allowed to default) on the ADD DISK or SET *disk-name* commands, a small amount of disk space is made inaccessible to the host and used for metadata. However, if TRANSPORTABLE was specified, any metadata is destroyed on the device and the full device is accessible to the host. Refer to Appendix B for details of when initializing is required.

4. (**For all controller models:**) Add the units that use either the devices directly or the storagesets built from the devices by entering the following command at the CLI> prompt:

```
CLI> ADD UNIT logical-unit-number container-name

For example:  CLI> ADD UNIT D300 DISK0
              CLI> ADD UNIT D200 RAID99
```

where:

logical-unit-number is the unit number the host uses to access the device.

container-name identifies the device or the storageset.

A point to remember is that certain information related to the companion controller in a dual-redundant configuration may not always appear on the display screen. When a device or parameter information does not appear after entering a command from one controller, enter the same command from the other controler.

5.3 Using the TRANSPORTABLE and NOTRANSPORTABLE Qualifiers

Before initializing a device using the CLI INITIALIZE command, make sure you know the status of that device. Ask yourself the following questions before proceeding with a device initialization:

- Will this device be used on HS*x* and HSC controllers, or not moved at all?
- Will this device be used on an HS array controller or HSC controller? (If so, set it NOTRANSPORTABLE.)
- Did it come from a non-HS or non-HSC k.SCSI array controller system?

When you bring a device from non-HS or non-HSCk.SCSI array controller system, and initialize it as nontransportable, you lose a few blocks of data. This is the metadata at the end of the LBN area.

Therefore, when bringing non-HS array/non-HSC K.SCSI devices to an HSJ/HSD30/HSZ array controller system, initialize the device as transportable, then copy the data on that disk to another nontransportable unit. Then reinitialize that device as nontransportable, thereby putting metadata on the previously transportable device.

CAUTION

Do not keep any device set as transportable on an HSJ/HSD/HSZ array controller system because you want forced error support on all units behind the HS array controllers. This is *mandatory* for use in Host-Based Volume Shadowing and is important for improving the data integrity of the entire array. Devices set transportable are *not* supported for host shadow sets. The exception is for CD–ROMs and certain optical disks. CD–ROMs are always set TRANSPORTABLE.

The transportable feature is provided to bring old non-HS array controller system customer data into the array system easily, not for normal system usage.

If you bring in a nontransportable device and initialize it, you destroy all forced error information for that device. So instead, if the unit was already set nontransportable, just enter the CLI ADD UNIT command (after adding the disk), and the HS array controller code verifies that the metadata is present. An initialization is *NOT* required.

Devices set transportable are not MSCP compliant. Devices set nontransportable (using the NOTRANSPORTABLE qualifier) are MSCP compliant, because they have metadata that provides forced error support.

5.4 Customer Acceptance Tests with Power Applied

This section describes customer acceptance tests. Refer to Chapter 7 for information on how to run DILX and TILX.

After you install, set parameters for, and configure your controller subsystem, perform the following acceptance tests for your subsystem:

- Power ON your subsystem—This resets all shelves and starts the spin-up cycle of the devices within the shelves. This includes the initialization (diagnostics) on the controllers and device self-tests.

- Run DILX—Use the default answers to the test questions (see Chapter 7). This tests all disk devices in your subsystem.

  DILX tests logical units that can consist of storagesets or physical devices. Error reports identify the logical units, not the physical devices. Therefore, if errors occur while running against a storageset, the storageset should be reconfigured as individual devices, and then DILX run against the individual devices.

- Run TILX—Use the default answers to the test questions (see Chapter 7). This tests all tape devices in your subsystem.

5.5 How to Use and Interpret the Controller OCP Buttons and LEDs

The HS array controller modules have attached operator control panels (OCPs), sometimes called bus quiesce panels. Depending on the controller model, the OCPs have a reset button and from three to six port buttons. A green LED is embedded in the OCP reset (//) button. Amber LEDs are used to report error code information.

The green button with embedded LED on the OCP is the controller reset (//) button. The use of the reset (//) button and the remaining port buttons can vary depending on whether the controller is initializing or in normal operation.

Port device buttons and associated LEDs are numbered one through six (with one being closest to the reset button) for those models with six port buttons. Models with three ports are numbered one through three. However, all six amber LEDs are used to report error code information on controllers with three ports.

5.5.1 Uses of the OCP Buttons and LEDs

The buttons and LEDs on the OCP are used in two ways:

- During controller initialization, the LEDs report diagnostic errors and the state of the controller.
- After the initialization process has completed, the port buttons and their amber LEDs are used to perform warm swap procedures for the devices attached to the controller.

  Refer to Figure 5–2 for the location of the OCP reset (//) and Port Quiesce buttons (on an HSJ40 array controller). The reset (//) and port quiesce buttons are located in a similar location for the other HS array controller models.

5.5.2 How the OCP Functions

At the moment controller initialization begins, hardware turns on the green LED in the reset (//) button, with the remaining LEDs turned off. This denotes the initialization state.

If at any point in the initialization sequence an error is found by controller diagnostics, the amber OCP LEDs are illuminated by the controller diagnostics, indicating an error has been detected.

Figure 5–3 shows the solid OCP LED error codes displayed when a failure occurs during initialization. Figure 5–4 shows the flashing OCP LED error codes displayed when failures occur during controller initialization.

Figure 5–2 HSJ40 Operator Control Panel Reset and Port Buttons

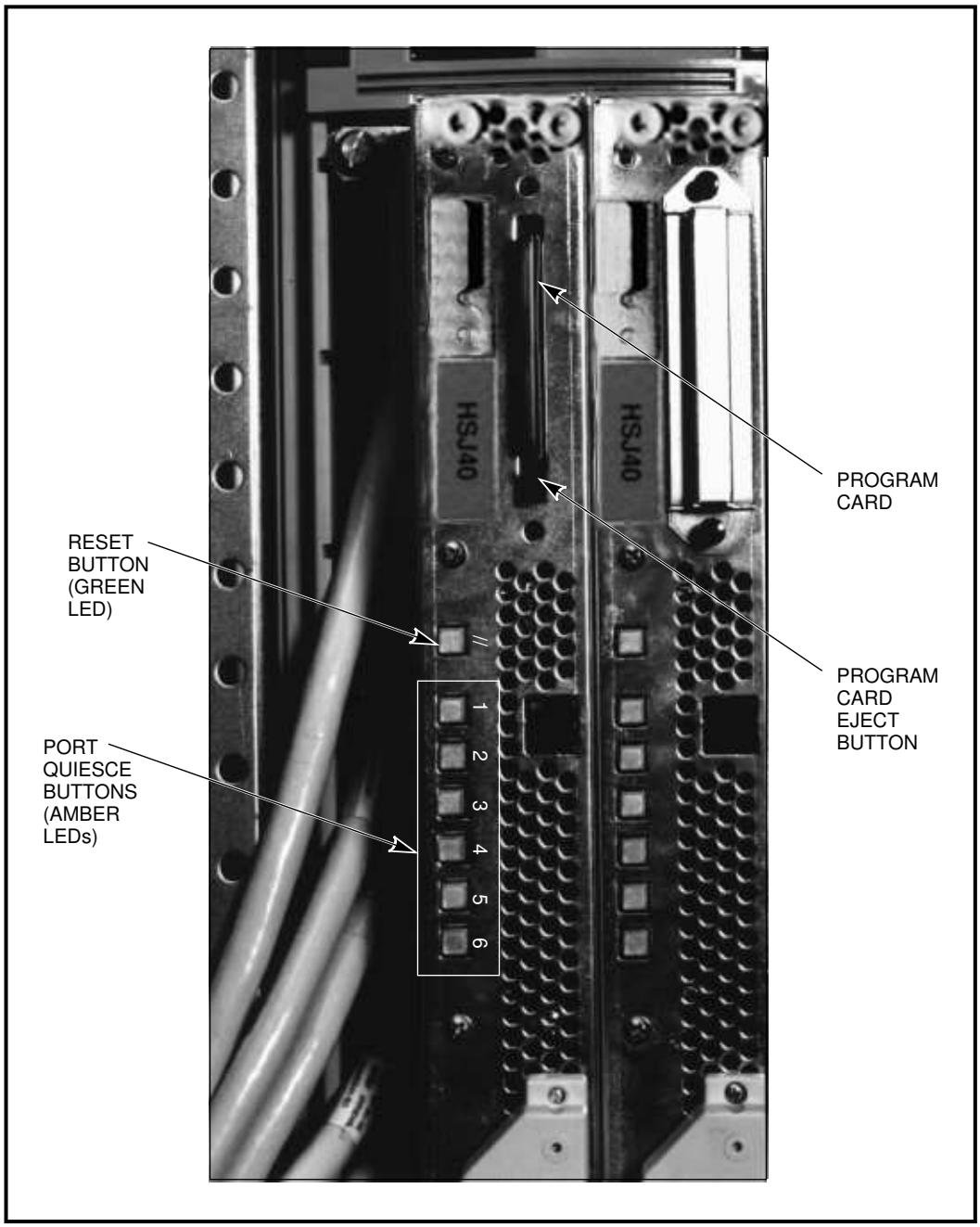

CXO-3664A_PH

Figure 5–3 HS Array Controllers Solid OCP LED Error Codes

Reset	1	2	3	4	5	6		Description of Error	Action
■	■	■	■	■	■	■	3F	DAEMON hard error.	Replace controller module.
■	■	■	■	■	■	□	3E	Repeated firmware bugcheck.	Replace controller module.
■	■	■	■	■	□	■	3D	NVMEM version mismatch.	Replace program card with later version.
■	■	■	■	■	□	□	3C	NVMEM write error.	Replace controller module.
■	■	■	■	□	■	■	3B	NVMEM read error.	Replace controller module.
■	■	■	■	□	■	□	3A	NMI error within firmware bugcheck.	RESET (//) the controller.
■	■	■	■	□	□	■	39	Inconsistent NVMEM structures repaired.[1]	RESET (//) the controller.
■	■	■	■	□	□	□	38	Bugcheck with no restart.	RESET (//) the controller.
■	■	■	□	■	■	■	37	Firmware induced restart following bugcheck failed to occur.	Replace controller module.
■	■	■	□	■	■	□	36	Hardware induced restart following bugcheck failed to occur.	Replace controller module.
■	■	■	□	■	□	■	35	Bugcheck within bugcheck controller.	RESET (//) the controller.
■	■	■	□	■	□	□	34	Mismatched controllers; cannot set failover.	Install same-model controllers.
■	□	□	□	□	□	□	00	No program card seen.[2]	Replace controller module.

□ Off ■ Lit continuously

DAEMON = Diagnostic and Execution Monitor
NVMEM = Nonvolatile Memory
NMI = Nonmaskable Interrupt

[1] A power failure or controller reset during an NVMEM update causes this error. If the error occurs on one controller in a dual-redundant configuration, a configuration mismatch will probably occur upon restart.
[2] Try the card in another module. If the problem moves with the card, replace the card. If the problem does not move with the card, replace the controller module.

Figure 5–4 HS Array Controllers Flashing OCP LED Error Codes

Reset	1	2	3	4	5	6		Description of Error	Action
■	□	□	□	□	□	◪	01	Program card EDC error.	Replace program card.
■	□	□	□	◪	□	□	04	Timer zero in the timer chip will run when disabled.	Replace controller module.
■	□	□	□	◪	□	◪	05	Timer zero in the timer chip decrements incorrectly.	Replace controller module.
■	□	□	□	◪	◪	□	06	Timer zero in the timer chip did not interrupt the processor when requested.	Replace controller module.
■	□	□	□	◪	◪	◪	07	Timer one in the timer chip decrements incorrectly.	Replace controller module.
■	□	□	◪	□	□	□	08	Timer one in the timer chip did not interrupt the processor when requested.	Replace controller module.
■	□	□	◪	□	□	◪	09	Timer two in the timer chip decrements incorrectly.	Replace controller module.
■	□	□	◪	□	◪	□	0A	Timer two in the timer chip did not interrupt the processor when requested.	Replace controller module.
■	□	□	◪	□	◪	◪	0B	Memory failure in the I/D cache.	Replace controller module.
■	□	□	◪	◪	□	□	0C	No hit or miss to the I/D cache when expected.	Replace controller module.
■	□	□	◪	◪	□	◪	0D	One or more bits in the diagnostic registers did not match the expected reset value.	Replace controller module.
■	□	□	◪	◪	◪	□	0E	Memory error in the nonvolatile journal SRAM.	Replace controller module.
■	□	□	◪	◪	◪	◪	0F	Wrong image seen on program card.	Replace program card.
■	□	◪	□	□	□	□	10	At least one register in the controller DRAB does not read as written.	Replace controller module.
■	□	◪	□	□	□	◪	11	Main memory is fragmented into too many sections for the number of entries in the good memory list.	Replace controller module.
■	□	◪	□	□	◪	□	12	The controller DRAB chip does not arbitrate correctly.	Replace controller module.

□ Off ■ Lit continuously ◪ Flashing

I/D = Instruction/Data (cache on the controller module)
DRAB = Dynamic RAM Controller and Arbitration Engine (operates controller shared memory)
ECC = Error Correction Code
EDC = Error Detection Code
SRAM = Static RAM
NXM = Nonexistent Memory

(continued on next page)

Figure 5–4 (Cont.) HS Array Controllers Flashing OCP LED Error Codes

Reset	1	2	3	4	5	6		Description of Error	Action
■	□	◪	□	□	◪	◪	13	The controller DRAB chip failed to detect forced parity, or detected parity when not forced.	Replace controller module.
■	□	◪	□	◪	□	□	14	The controller DRAB chip failed to verify the EDC correctly.	Replace controller module.
■	□	◪	□	◪	□	◪	15	The controller DRAB chip failed to report forced ECC.	Replace controller module.
■	□	◪	□	◪	◪	□	16	The controller DRAB chip failed some operation in the reporting, validating, and testing of the multibit ECC memory error.	Replace controller module.
■	□	◪	□	◪	◪	◪	17	The controller DRAB chip failed some operation in the reporting, validating, and testing of the multiple single-bit ECC memory error.	Replace controller module.
■	□	◪	◪	□	□	□	18	The controller main memory did not write correctly in one or more sized memory transfers.	Replace controller module.
■	□	◪	◪	□	□	◪	19	The controller did not cause an I-to-N bus timeout when accessing a “reset” host port chip.	Replace controller module.
■	□	◪	◪	□	◪	□	1A	The controller DRAB chip did not report an I-to-N bus timeout when accessing a “reset” host port chip.	Replace controller module.
■	□	◪	◪	□	◪	◪	1B	The controller DRAB did not interrupt the controller processor when expected.	Replace controller module.
■	□	◪	◪	◪	□	□	1C	The controller DRAB did not report an NXM error when nonexistent memory was accessed.	Replace controller module.
■	□	◪	◪	◪	□	◪	1D	The controller DRAB did not report an address parity error when one was forced.	Replace controller module.
■	□	◪	◪	◪	◪	□	1E	There was an unexpected nonmaskable interrupt from the controller DRAB during the DRAB memory test.	Replace controller module.
■	□	◪	◪	◪	◪	◪	1F	Diagnostic register indicates there is no cache module, but an interrupt exists from the nonexistent cache module.	Replace controller shelf backplane.
■	◪	□	□	□	□	□	20	The required amount of memory available for the code image to be loaded from the program card is insufficient.	Replace controller module.

□ Off ■ Lit continuously ◪ Flashing

I/D = Instruction/Data (cache on the controller module)
DRAB = Dynamic RAM Controller and Arbitration Engine (operates controller shared memory)
ECC = Error Correction Code
EDC = Error Detection Code
SRAM = Static RAM
NXM = Nonexistent Memory

(continued on next page)

Figure 5–4 (Cont.) HS Array Controllers Flashing OCP LED Error Codes

Reset	1	2	3	4	5	6		Description of Error	Action
■	◪	□	□	□	□	◪	21	The required amount of memory available in the pool area is insufficient for the controller to run.	Replace controller module.
■	◪	□	□	□	◪	◪	23	The required amount of memory available in the buffer area is insufficient for the controller to run.	Replace controller module.
■	◪	□	□	◪	□	□	24	The code image was not the same as the image on the card after the contents were copied to memory.	Replace ontroller module.
■	◪	□	□	◪	□	◪	25	Diagnostic register indicates that the cache module exists, but access to that cache module caused an error.	Replace controller shelf backplane.
■	◪	□	□	◪	◪	□	26	Diagnostic register indicates that the cache module does not exist, but access to that cache module did not cause an error	Replace controller shelf backplane.
■	◪	◪	□	□	□	□	30	The journal SRAM battery is bad.	Replace controller module.
■	◪	◪	◪	□	◪	□	3A	There was an unexpected interrrupt from a read cache or the present and lock bits are not working correctly.	Replace controller module.
■	◪	◪	◪	□	◪	◪	3B	There is an interrupt pending to the controller's policy processor when there should be none.	Replace controller module.
■	◪	◪	◪	◪	□	□	3C	There was an unexpected fault during initialization.	Replace controller module.
■	◪	◪	◪	◪	□	◪	3D	There was an unexpected maskable interrupt received during initialization.	Replace controller module.
■	◪	◪	◪	◪	◪	□	3E	There was an unexpected nonmaskable interrupt received during initialization.	Replace controller module.
■	◪	◪	◪	◪	◪	◪	3F	An illegal process was activated during initialization.	Replace controller module.

□ Off ■ Lit continuously ◪ Flashing

I/D = Instruction/Data (cache on the controller module)
DRAB = Dynamic RAM Controller and Arbitration Engine (operates controller shared memory)
ECC = Error Correction Code
EDC = Error Detection Code
SRAM = Static RAM
NXM = Nonexistent Memory

When a configuration mismatch (usually after a warm swap procedure) or a disk drive failure is detected, the port LED for the affected disk drive is solidly lit.

Error indications may or may not clear when the controller is reset. Try resetting the controller by pushing the OCP reset (//) button to see whether the same error indication is repeated. If the error indication is the same, replace the

indicated FRU. If the error indication changes, look up that code in Figure 5–3 or Figure 5–4 and replace the indicated FRU.

Note

The OCP LEDs flash once per second to indicate normal operations, remain on solid or flash three times per second to indicate an error condition.

After initialization is complete, the port buttons and associated LEDs are used as Bus Quiesce Request buttons in device warm swap removal and replacement procedures.

5.6 Power Supply Status LEDs

Refer to the *StorageWorks Solutions Shelf and SBB User's Guide* for information concerning power supply status LEDs. Power supplies have a shelf status LED and a power supply status LED. The top LED is the shelf status LED (SBB LED) discussed in the SBB warm swap procedure.

5.7 Battery Backup Unit (BBU) Status LEDs

Refer to the *StorageWorks Solutions Shelf and SBB User's Guide* for information concerning the battery backup unit status and fault LEDs. Device shelves can use BBUs if they do not have a second power supply.

5.8 Environmental Monitor Unit (EMU) for HSZ40–B*x* Array Controllers

The EMU is used only in the SW300 cabinet and provides increased protection against catastrophic subsystem faults. The EMU works with the controller to warn you of various existing or impending subsystem failures. The controller responds to such conditions by displaying console error messages, and by controlling warning LEDs on the EMU and the devices themselves. Refer to the *StorageWorks Array Controllers HS Family of Array Controllers Service Manual* for error messages.

The EMU performs the following specific functions (SW300 cabinets only):

- Monitors and controls the shelf blowers
- Monitors the on/off condition of each power supply
- Senses shelf/cabinet temperature
- Monitors power supply voltages

See the *StorageWorks Solutions SW300-Series RAID Enclosure Installation and User's Guide* for more information on the EMU.

5.8.1 EMU Fault Detection

Once the SW300 cabinet is powered on, it operates normally until a fault condition is detected by the EMU. If the EMU detects a fault condition, it performs any or all of the following:

- Turns on the appropriate LED on the EMU panel

- Turns on the fault (amber) LED on the front upper right corner of the SW300 cabinet
- Activates an audible alarm
- Increases the speed of the blowers

Figure 5–5 shows the EMU front panel LEDS which display information when the subsystem is turned on or encounters a problem.

Figure 5–5 EMU Front Panel LEDs and Switches

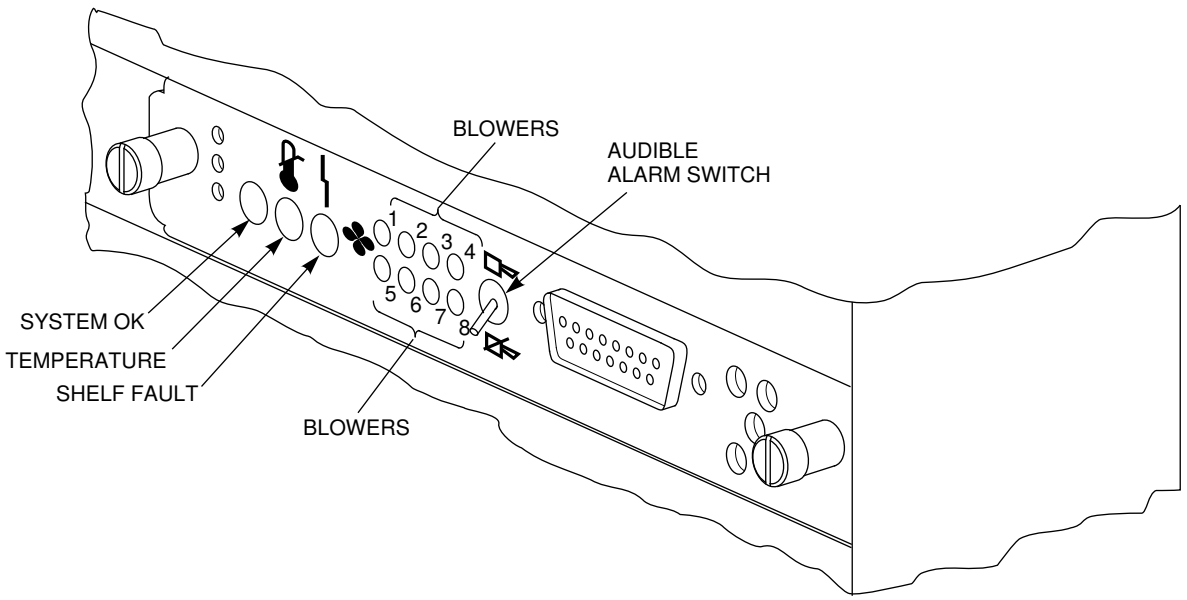

5.8.2 Controller Fault Detection

If the controller detects a storage device failure/fault, or a fault in the other controller in a dual-redundant configuration, it illuminates the fault (amber) LED on the EMU. When a special ‘‘controller alive’’ signal from either controller indicates to the EMU that a controller is not functioning, the EMU does the following:

- Turns on its fault (amber) LED
- Turns off its System OK (green) LED
- Activates an audible alarm

The HSZ40–B*x* controller generates an error message on the maintenance terminal when it detects one of the following fault conditions:

- A power supply SBB has failed
- A blower has failed or is either not installed or not connected
- The operating temperature is too high

Table 5–1 lists the EMU front panel buttons and LEDs, their functions and error descriptions.

Table 5–1 EMU Front Panel LEDS/Switches and Error Descriptions

When the ...	Is	The System ...
System OK (green) LED	ON	Is in the normal operating state.
Shelf Fault (amber) LED	OFF	
Blower 1 through 8 (amber) LEDs	OFF	
Temperature (amber) LEDS	OFF	
Audible Alarm	OFF	
Audible Alarm	ON	Has a failed FRU. Check the EMU control panel LEDS to determine which FRU has failed.
System OK (green) LED	OFF	Has a failed FRU and one or more of the following error conditions exist: – The temperature is above the maximum safe operating level. – The +12 V dc power supply output is out of regulation. – The +5 V dc power supply output is out of regulation. – Fewer than four power supply SBBs are operational – One controller may be defective. Check for any error messages on the terminal (if one is attached).
Blower *x* LED	ON	Has an individual blower *x* failure.
Blower 1, 2, 3, and 4 (amber) LEDs	ON	Has one of these four blowers either not installed or not connected.
Blower 5, 6, 7, and 8 (amber) LEDS	ON	Has one of these four blowers either not installed or not connected.
Temperature (amber) LED	ON	Operating temperature is too high. The blowers will operate at high speed to reduce the temperature.
Shelf Fault (amber) LED	ON	Has one or more of the following faults: – A power supply SBB has failed. (Verify whether any individual power supply SBBs are off to confirm.) – A storage device SBB or one of the controllers has failed. (Refer to the controller OCP LED codes tables in this chapter.) – Fewer than four power supply SBBs are operational.

5.9 Description of Device Warm Swap

Device **warm swap** is a sequence of quick removal and insertion steps, allowing an operator to safely remove a device and insert another device in its place, or to add a new device.

The reason for performing the following steps is to protect data integrity for other shelf devices, and to reduce the chance of an operator causing a port to be unusable for a long period of time (which could render several devices inaccessible). Only one port may be quiesced at any time.

CAUTION

Never remove or add a device without using the device warm swap procedure. Pulling a device directly from a shelf and/or replacing a device without using the device warm swap procedure is not supported by Digital and can cause the device to not be recognized by the controller.

Warm swap is not applicable to service on unpowered StorageWorks shelves. Do not attempt to execute warm swap on an unpowered shelf.

5.9.1 Device Warm Swap

Devices can be safely removed and replaced without taking the system down or taking the controller off line. The procedure is divided into removal (the steps necessary before device removal) and replacement (the steps necessary before device replacement).

Note

Device warm swap includes removing *and* replacing *one device at a time*. Should another disk need to be removed, the entire warm swap procedure must be repeated. Each step must be done in the order given to preserve data integrity during normal operations.

You may also use the SBB warm swap procedure to add a device to an empty shelf slot.

You need a 5/32-inch Allen wrench to open the doors of the cabinet (for SW800-series cabinets). This is the only tool required for the device warm swap procedure.

5.9.1.1 Disk SBB Warm Swap Removal

CAUTION

For all configurations except those using RAIDsets and mirrorsets, you must dismount the units utilizing the affected devices by using your operating system's DISMOUNT command *before* beginning this procedure. Perform this warm swap procedure **EXACTLY** as stated, or the controller can perform unpredictably.

Refer to operating system-specific documentation for procedures necessary for dismounting a device.

RAIDsets *that are not already running as reduced* will automatically adjust to the removal of a device (the RAIDset will go reduced). In this case, there is no need to dismount the RAIDset unit. However, you must dismount the RAIDset unit if the RAIDset is already reduced.

Mirrorsets that have at least one NORMAL or NORMALIZING member other than the one being removed automatically adjust to removed of the device. In this case, there is no need to dismount the affected unit.

Disk drive SBBs can be removed safely using the following process:

1. Unlock and open the cabinet doors using a 5/32-inch Allen wrench (needed for SW800-series cabinets only).
2. Press and hold the port button for the disk SBB you wish to remove. Continue holding the button in until all amber OCP LEDs light. This action starts the ''quiesce'' process.

   Note

   Only one port may be quiesced at at time.

   If the button is not held in long enough, or multiple buttons are pushed in quick succession, *all* button pushes are ignored and the port is not quiesced. You must press the button again to quiesce the port.

   The selected port LED flashes for 10 seconds. All other port LEDs turn off.
3. Wait until the chosen port LED flashes alternately with the other port LEDs (this indicates I/O has stopped). This alternating pattern flashes for approximately 30 seconds, during which time you may remove the SBB.

   If the pattern does not appear after a minute, another shelf is asserting a fault signal that prevents any quiesce function on this controller. For tips to correct the problem, refer to Section 5.10. If more information is needed, refer to *StorageWorks Array Controllers HS Family of Array Controllers Service Manual* for instructions for troubleshooting and resolving the problem.
4. Remove the disk SBB from its device shelf by squeezing both plastic tabs at the top and bottom of the SBB towards the center of the SBB. Slide the SBB out of the shelf using both hands, as shown in Figure 5–6.

Figure 5–6 SBB Warm Swap

CXO-3611B-PH

While the OCP LEDs are flashing their alternating pattern, the shelf SBB LEDs for all disk SBBs on that port also flash. (Although tape drives do not always have LEDs, remove them at this time if you are using warm swap to remove a tape drive. Some tape drives cannot be warm swapped.) The interval between the quiesce request and the actual halting of I/O can vary from zero seconds to 1 minute, depending on the load, device type, and cache status.

After the device is removed, its port LED remains solidly lit until it is either replaced or deleted from the controller's configuration.

5.9.1.2 Disk SBB Warm Swap Replacement

Use a replacement device of the same type as the removed device. Otherwise, subsystem failures may occur. Disk SBBs can be safely replaced (inserted) using the following process:

1. Press and hold the port button for the disk drive you wish to replace. Continue holding the button in until all amber OCP LEDs light. This action starts the quiesce process.

   Note

   Only one port may be quiesced at a time.

   If the button is not held in long enough, or multiple buttons are pushed in quick succession, *all* button pushes are ignored and the port is not quiesced. You must press the button again to quiesce the port.

   The selected port LED flashes for 10 seconds. All other port LEDs turn off.

2. Wait until the chosen port LED flashes alternately with the other port LEDs (this indicates I/O has stopped). This alternating pattern flashes for approximately 30 seconds. The interval between the quiesce request and the actual halting of I/O can vary from zero seconds to 1 minute, depending on the load and the type or device.

3. Replace (insert) the disk SBB during this 30 second interval. Use both hands to push it into the shelf. You should hear the mounting tabs snap into place.

After the SBB is inserted, its port LED flashes for approximately 15 seconds and then turns off, unless other configuration errors exist on that port. Normal operation resumes on the port.

If a *new* device is added in a previously *unused* slot, that port's LED remains on until the device is added to the controller's configuration.

If a tape device is placed in a slot where a disk device was previously installed, the port LED remains on until the tape device is added to the controller's configuration. Delete the previously installed disk from the list of CLI known devices, then add the tape.

4. Close and lock the cabinet doors.

5.9.2 Tape Drive Warm Swap (Removal/Replacement)

The same procedure used to warm swap disk drives also is used for 3½-inch and 5¼-inch tape drive SBBs. Refer to Sections 5.9.1.1 and 5.9.1.2. Some tape drives cannot be warm swapped.

5.10 When the Quiesce Bus State Is Not Displayed

When a power supply fails in a shelf with only one power supply, the shelf becomes inactive.

If the bus quiesce LED pattern is not displayed after pushing the appropriate port button (as described in the warm swap procedure) within a minute or two, a failed power supply on another shelf within the cabinet may be causing the problem. This problem must be fixed before restarting the warm swap procedure.

To correct the problem do one of the following:

- Replace the power supply in the failed shelf (or shelves)
- Remove all devices in the failed shelf (or shelves)
- Unplug the SCSI cable within the failed shelf (or shelves)

After one of the corrective actions listed has been completed, wait 2 to 3 minutes for the controller to observe change. You can then begin using the warm swap procedure as documented in Sections 5.9.1.1 and 5.9.1.2.

Note

The bus quiesce procedure for warm swap is NOT necessary when removing or adding devices to a shelf without power.

5.11 Controller Warm Swap Utility (C_SWAP)

Controller warm swap is supported for HSJ array controllers beginning with HSOF Version 1.4 or later. HSD30 array controllers support controller warm swap beginning with HSOF Version 2.0 or later. HSZ array controllers support controller warm swap beginning with HSOF Version 2.5. The controller warm swap utility is referred to as C_SWAP.

Performing warm swap involves removing one controller, while forcing the other controller into failover. Because the remaining controller executes failover, it assumes control of the absent controller's devices. This minimizes impact to system performance and downtime.

Note

HSD30 and HSZ controllers: You cannot effectively warm swap some earlier HSD30 or HSZ array controllers (in slot SCSI ID 7 in BA350–MA shelves, SCSI ID 6 in SW300-series cabinet shelves), because interference from the companion controller's trilink connector prevents removal and replacement. Later controller models have a notched bezel to allow for controller warm swap, as well as notched connectors on the host port cable to allow for removal of the trilink connector block with the host port cables and terminators attached.

Use the Controller Warm Swap Utility (C_SWAP) to remove and replace one controller and/or read cache module in a dual-redundant controller configuration. The C_SWAP program fails over all I/O operations to the controller running C_SWAP to allow the bus settling time in preparation for the remove/replace operation. When warm swapping a controller by using C_SWAP, you are removing/replacing a controller in the most transparent method available to the HS array controller subsystem.

Warm swap differs from executing the CLI SHUTDOWN command in that devices are not forced off line, and you do not need to remove power from the controller. However, if the controller you plan to warm swap is still functioning (green LED blinking), you *must* shut down that controller using the controller SHUTDOWN command prior to running C_SWAP.

CAUTION

Warm swap only one controller at a time. Never attempt to remove both controllers at the same time in a dual-redundant configuration. The other (good) controller must remain operational to support not only its own devices, but those devices that failed over from the failed controller.

HSD30 Controllers: You must not warm swap HSD30 controllers unless you have mating guides (refer to Chapter 4) installed on the controller's DSSI host port connectors. Without a mating guide, if you accidentally short DSSI connector pins during aligning and connecting/disconnecting the connector, you risk blowing the fuses of *all* members on the DSSI bus.

Furthermore, you *must not* warm swap HSD30 controllers unless your DSSI host port cable and terminator connectors allow for trilink removal with the host port cables (or terminator) attached. Newer connectors designs are slotted to allow clearance for a very small flat-head screwdriver to remove the trilink with the connectors attached.

5.11.1 When to Use C_SWAP

Use C_SWAP when you want to remove and replace a single failed HS array controller or cache module that is part of a redundant pair. You can either replace the module immediately while in C_SWAP, or you can exit C_SWAP and leave the failed-over controller running until you replace the module at a later time.

Because C_SWAP performs a quiesce operation on all ports of the HS controller, you should use C_SWAP even if failover has already occurred due to a fatal error of one controller in the pair.

The C_SWAP utility can also be used to add a second controller and cache module to a nonredundant controller configuration, or for upgrading cache modules. The C_SWAP program first goes out and looks at the hardware configuration in the controller shelf. If it sees a dual-redundant configuration it assumes a controller or cache module is going to be removed. If it sees a nonredundant configuration it assumes a controller and cache module are going to be added. In this case, the program skips the removal portion and goes directly to the add portion of the program.

5.11.2 Functions of C_SWAP

C_SWAP performs the following functions during module removal/replacement procedures:

- Prompts you to identify the modules to be removed
- Fails over I/O to the HS controller that is running C_SWAP
- Performs a quiesce procedure for all HS controller ports on the bus
- Prompts you to remove and replace the failed controller or cache module
- Restarts the subsystem in either failed-over configuration or full redundant operation

You can abort the C_SWAP utility by entering either Ctrl/C or Ctrl/Y (followed by pressing the Return key) commands anytime during the utility's operation.

Tools Required

You will need the following tools to warm swap a controller:

- ESD strap (for grounding purposes during module handling procedures)
- 3/32-inch Allen wrench (for loosening front bezel mounting screws on HSJ controllers)
- 5/32-inch Allen wrench (for opening SW800-series cabinet doors)
- Flat-head screwdriver (for loosening front bezel mounting screws on HSD30 and HSZ controllers)
- Very small flat-head screwdriver (for removing trilink connector blocks with the host port cable and terminator still attached)

5.11.2.1 Removing a Controller and/or Cache Module During a C_SWAP Operation

Use the following procedure as an example for warm swapping an HS array controller module:

1. Wear an ESD grounding strap and ground yourself to the cabinet grounding stud before servicing the controller and/or cache module.
2. Set up either a virtual terminal connection or your maintenance terminal to the controller you are **not** removing.
3. If the controller you are removing has totally failed, proceed to step 5.

   If the controller you are removing has any I/O outstanding or devices online, shut down that controller (refer to Section 5.18).
4. For **HSD30 and HSZ40–B*x* Array Controllers**: Because it takes more time to remove the trilink connector with the host port cable and terminator attached, loosen the four mounting screws on the controller's front bezel and the two screws on the trilink connector BEFORE starting the C_SWAP utility.

5. Enter the following command:

   ```
   HSx> RUN C_SWAP
   ```

   The system responds with:

   ```
   Controller Warm Swap, Software Version -V2.0
   *** Sequence to REMOVE other HSJ40 has begun. ***
   Do you wish to REMOVE the other HSJ40 Y/N [N]? YES
   ```

6. Enter ''Y'' to continue the procedure.

   ```
   Will its cache module also be removed Y/N [N]? YES
   ```

7. Enter ''Y'' only if you are removing the controller's cache module as well.

   After you answer the controller/cache module identity prompts, C_SWAP fails over the I/O for the failed controller to the controller running C_SWAP. The failover operation is complete when the green indicator (reset LED) on the HS array controller module to be replaced stays lit. C_SWAP then performs a bus quiesce operation and prompts you to remove the specified modules, as shown in the following example:

   ```
   Killing other controller.
   Attempting to quiesce all ports.
      Port 1 quiesced.
      Port 2 quiesced.
      Port 3 quiesced.
      Port 4 quiesced.
      Port 5 quiesced.
      Port 6 quiesced.
   All ports quiesced.
   Remove the other HSJ40 (the one WITHOUT a blinking green LED) within 5 minutes.
   Time remaining 4 minutes, 50 seconds.
   ```

   CAUTION

   Do not remove the controller with the blinking green LED reset (//) button.

8. You have 5 minutes to perform the remove operation for a controller/cache module swap, and 2 minutes for the controller-only swap, following the steps described in Sections 5.12 and 5.13.

   If you do not complete the removal in this time, the configuration that was running when you started is restored, all ports are restarted, and C_SWAP exits. All ports remain quiesced during this interval. If you have not inserted a replacement controller or cache module, you are prompted as follows:

   ```
   Do you have a replacement HSJ40 readily available [N]? Return
   No OTHER HSJ40 immediately available, program exiting.
   ```

   If you enter NO or press Return in response to this prompt, C_SWAP exits with the HS array controller in the failed-over configuration. If you enter YES, you are given an additional time interval to perform the remove/replace operation.

The replacement configuration must contain both a cache module and an HS array controller module. The replacement HS array controller module must have its program card *removed* during the insertion process. This eliminates the possibility of prematurely starting the C_SWAP program before the module is completely installed. Once the second controller is detected, C_ SWAP displays a restart procedure and exits. Insert the program card into the newly replaced controller module to complete the restart procedure.

5.11.2.2 Replacing a Controller and/or Cache Module During a C_SWAP Operation

The following is an example of a C_SWAP session for an HSJ40 array controller /cache module swap in which the replacement HSJ40 array controller is *not* immediately available. After you have entered the RUN C_SWAP command, C_SWAP prompts you as follows:

```
Do you have a replacement HSJ40 readily available [N]? NO
```

The warm swap sequence terminates, and you have to restart the routine later when you have a replacement module.

When you have a replacement, you can restart the sequence by entering the RUN C_SWAP command again. The system responds with the following:

```
Do you have a replacement HSJ40 readily available [N]? YES
```

1. Enter ''Y'' if you have the controller module.

   ```
   *** Sequence to INSERT other HSJ40 has begun. ***

   Do you wish to INSERT the other HSJ40 [N]? YES
   ```

2. Enter Y to insert the controller module. (A message about the cache module appears only if you removed the cache module in the first place.)

   Remember to reinsert the cache module if necessary.

   ```
   Attempting to quiesce all ports.

      Port 1 quiesced.
      Port 2 quiesced.
      Port 3 quiesced.
      Port 4 quiesced.
      Port 5 quiesced.
      Port 6 quiesced.

   All ports quiesced.

   Insert the cache module, then insert the other HSJ40, WITHOUT its
   program card, and press Return.
   ```

3. Insert the cache module (if applicable) and controller module now. Follow the steps outlined in Section 5.14 to physically replace your controller module, or in Section 5.15 to replace your cache module.

   ```
   Restarting ALL ports.

      Port 1 restarted.
      Port 2 restarted.
      Port 3 restarted.
      Port 4 restarted.
      Port 5 restarted.
      Port 6 restarted.

   The configuration has two controllers.

   The Controller Warm Swap program has terminated. To restart the
   other controller:
   ```

```
    1) Enter the RESTART OTHER_CONTROLLER command.
    2) Press and hold in the Reset (//) button while inserting the
       program card.
    3) Release Reset (//); the controller will initialize.
    4) Configure new controller by referring to the StorageWorks
       Controller User's Guide.

HSJ>
```

If you are replacing a failed controller module in a dual-redundant configuration, follow the steps on the C_SWAP display message to restart the other controller, except ignore step 4 and proceed with the following steps in the sequence given:

1. Set initial controller parameters such as the ID number, SCS node name, and disk and tape allocation classes as required. Use the same parameters that were set for the failed controller you just replaced. Do this from the maintenance terminal connector to the new controller. Do not issue a SET FAILOVER COPY= command at this time.
2. Enter the RESTART THIS_CONTROLLER command from the new controller to initialize this new controller.
3. After the new controller is initialized and the green reset LED is flashing once per second, connect the host port cables, trilink, and terminators to the new controller as required. If an error occurs during initialization, the OCP will display an error code.
4. Enter the SET FAILOVER COPY= OTHER_CONTROLLER command to copy the configuration information from the good (other) controller to this new controller.
5. Enter a SHOW THIS_CONTROLLER FULL command to ensure that the dual-redundant configuration has been created.
6. Enter SHOW UNITS, SHOW DEVICES FULL, or SHOW STORAGESETS as required.

Table 5–4 lists the steps for a controller module replacement.

5.12 How to Physically Remove a Controller Module

When running the C_SWAP utility, you are prompted to remove the controller and cache modules. Use the procedure in Table 5–2 to remove the controller module.

You will need the following tools to remove or replace a controller or cache module:

- ESD strap
- Nonconductive ESD mat
- 3/32-inch Allen wrench
- 5/32-inch Allen wrench (for SW800-series cabinet doors only)
- Very small flat-head (straight-edge) screwdriver

Note

Use proper ESD procedures when handling controller or cache modules, as described in Chapter 4.

Table 5–2 Controller Module Removal

Step	Description
1	Unlock and open the cabinet doors (SW800-series) using a 5/32-inch Allen wrench.
2	Ground yourself to the cabinet grounding stud (refer to Figure 5–7).
3	Unsnap and remove the program card ESD shield that covers the program card on the failed controller module.
4	Remove the program card by pushing the eject button next to the card. Pull the card out and save it for use in the replacement controller module. Place it on an antistatic surface only.
5	(**HSJ controllers**) Loosen the captive screws on the CI cable connector with a flat-head screwdriver and remove the cable from the front of the controller module. (**HSD30 controllers**) With a small flat-head screwdriver, loosen the captive screws on the trilink connector and remove the trilink from the front of the controller. You will have to work around any DSSI cable or terminator connections when removing the trilink. Do *not* remove the cables or terminators from the trilink or you will interrupt the host DSSI bus. Make sure the HSD30 host port connector has a plastic mating guide over the metal portion on the host port connector. (**HSZ controllers**) With a small flat-head screwdriver, loosen the captive screws on the trilink connector and remove the trilink from the front of the controller. You will have to work around any SCSI cable or terminator connections when removing the trilink. Do *not* remove cables or terminators from the trilink or you will interrupt the host SCSI bus.
6	Loosen the four mounting screws (refer to Figure 5–8) on each corner of the front bezel with a 3/32-inch Allen wrench (for HSJ controllers) or a flat-head screwdriver (for HSD30 and HSZ controllers.)
7	Use a gentle up-and-down rocking motion to loosen the controller module from the shelf backplane.
8	Slide the module out of the shelf (noting which rails the module was seated in) and place it on an approved ESD work surface or mat until it can be packaged for shipment to the Digital repair depot.
9	If necessary, you may now remove the cache module as described in Section 5.13.

Figure 5–7 Cabinet Grounding Stud

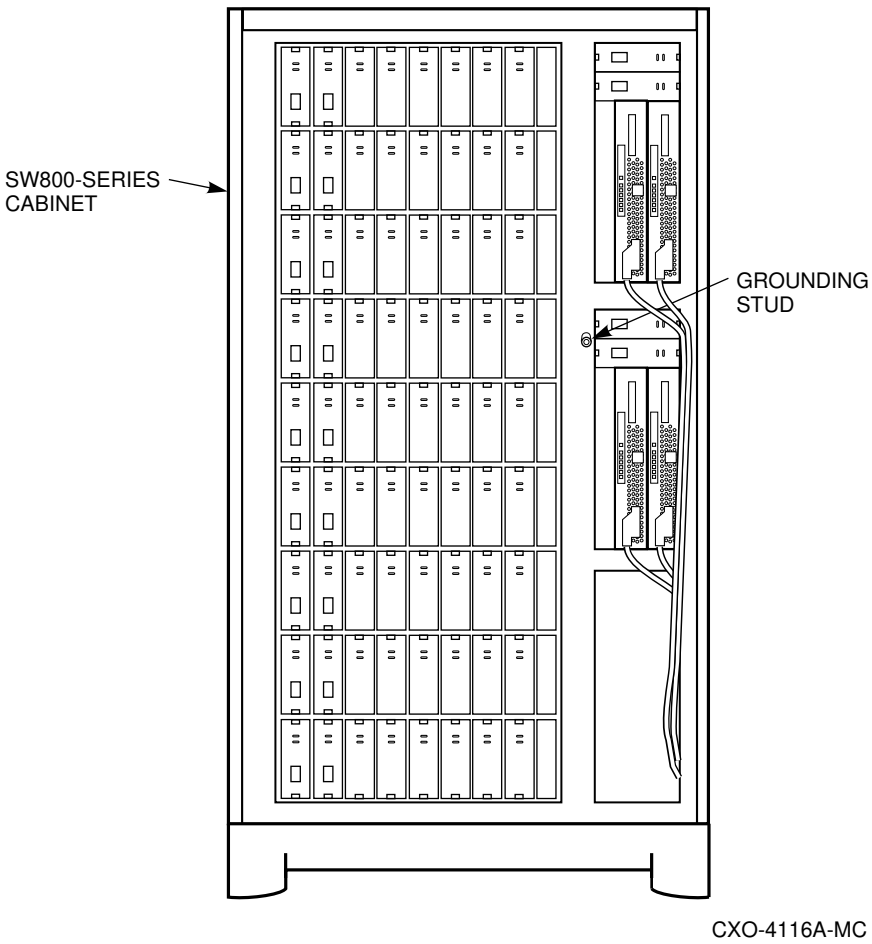

Figure 5–8 Four Front Bezel Screws, HSJ*xx* Controller

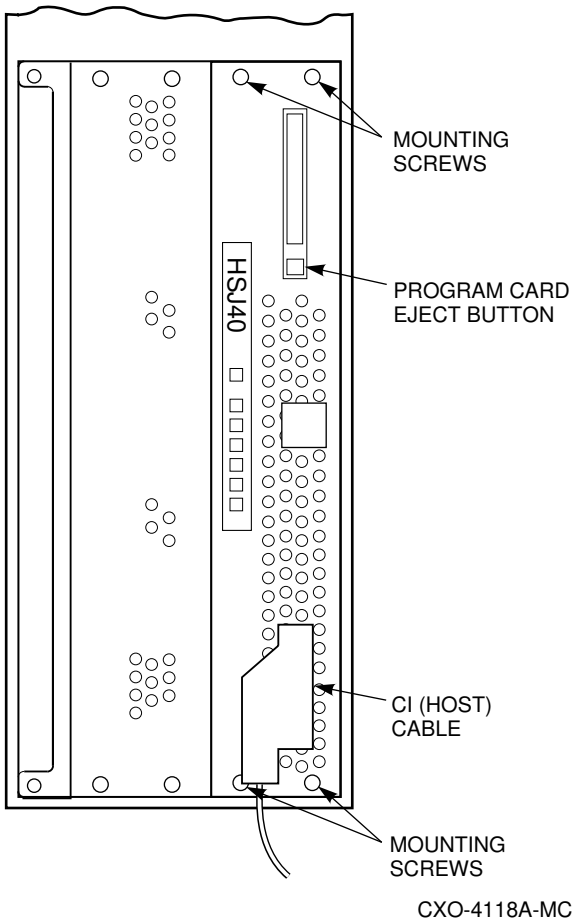

5.13 How to Physically Remove a Cache Module

Most controller modules will have a cache module installed behind them in the controller shelf. Use the C_SWAP utility to remove, replace, or upgrade your cache module.

CAUTION

For safety reasons, only qualified personnel may service the write-back cache module or its batteries. For complete write-back cache module servicing information, refer to the *StorageWorks Array Controller HS Family of Array Controllers Service Manual*.

Use the following procedure to remove your read cache module:

Table 5–3 Cache Module Removal

Step	Description
1	Ground yourself to the cabinet grounding stud (Figure 5–7) before servicing the cache module.
2	The controller module is seated in front of the cache module. Anytime you service a cache module, you must consider when it is appropriate to remove the controller module (based on considerations of configuration, down time, and so on).
3	To access the cache module, remove its controller module. To remove the controller module, refer to Section 5.12.
4	Loosen the four mounting screws (refer to Figure 5–8) on each corner of the front bezel with a 3/32-inch Allen wrench (for HSJ controllers) or a flat-head screwdriver (for HSD30 and HSZ controllers.)
5	Unsnap and remove the program card ESD shield that covers the program card on the failed controller module.
6	Remove the program card by pushing the eject button next to the card. Pull the card out and save it for use in the replacement controller module. Place it on an antistatic surface only.
7	(**HSJ controllers**) Loosen the captive screws on the CI cable connector with a flat-head screwdriver and remove the cable from the front of the controller module. (**HSD30 controllers**) With a small flat-head screwdriver, loosen the captive screws on the trilink connector and remove the trilink from the front of the controller. You will have to work around any DSSI cable or terminator connections when removing the trilink. Do *not* remove the cables or terminators from the trilink or you will interrupt the host DSSI bus. Make sure the HSD30 host port connector has a plastic mating guide over the metal portion on the host port connector. (**HSZ controllers**) With a small flat-head screwdriver, loosen the captive screws on the trilink connector and remove the trilink from the front of the controller. You will have to work around any SCSI cable or terminator connections when removing the trilink. Do *not* remove cables or terminators from the trilink or you will interrupt the host SCSI bus.
8	Use a gentle up-and-down rocking motion to loosen the cache module from the shelf backplane.
9	Slide the cache module out of the shelf, noting which rails it was seated in, and place it on an approved ESD mat.

5.14 How to Physically Replace a Controller Module

Note

Use proper ESD procedures when handling controller or cache modules as described in Chapter 4.

Use the procedure in Table 5–4 to replace your controller module during the controller warm swap replacement.

Note

Be sure to have the initial parameters that were set for the failed controller available. You will need these parameters to set the initial parameters for the new controller module.

Table 5–4 Controller Module Replacement

Step	Description
1	Ground yourself to the cabinet grounding stud (refer to Figure 5–7).
2	You should replace the cache module now, if you removed it. Refer to Section 5.15.
3	(HSJ controllers) Make sure the OCP cable is correctly plugged into side two of the controller module (refer to Figure 5–9).
4	Slide the controller module into the shelf using its slot's rightmost rails as guides (refer to Figure 5–10).
5	Use a gentle up-and-down rocking motion to help seat the module into the backplane. Press firmly on the module until it is seated. Finally, press firmly once more to make sure the module is seated. You may need to lift up on the module slightly to get the proper alignment.
6	Tighten the four mounting screws on the front bezel using a 3/32-inch Allen wrench (for HSJ controllers) or a flat-head screwdriver (for HSD30 and HSZ controllers).
7	Insert the program card that you removed from the failed controller into the program card slot and press the card in until the eject button is even with the edge of the card.
8	Snap the program card ESD shield into place by pressing the two plastic push pins on each side of the shield.
9	Set the initial parameters as defined in Section 5.2.5. Since a new controller module has no initial parameters, you must plug a maintenance terminal into the new controller's terminal port on the front bezel to enter them. Use the same parameters that were defined for the failed controller you just removed. Leave the maintenance terminal connected to the new controller.
10	(**HSJ controllers**) Connect the CI host port cable to the front of the controller and tighten its captive screws. (**HSD30 controllers**) Connect the trilink connector block, with DSSI host port cables or cable and terminator still connected, to the host port connector on the front of the controller. Tighten the screws on the trilink with a small flat-head screwdriver. (**HSZ controllers**) Connect the trilink connector block, with SCSI host port cables or cable and terminator still connected, to the host port connector on the front of the the new controller. Tighten the screws on the trilink with a small flat-head screwdriver.
11	Press and hold the Reset (//) button while inserting the program card into the program card slot and pressing the card until the eject button is even with the edge of the card.
12	Release the Reset (//) button. The controller will initialize.

(continued on next page)

Table 5–4 (Cont.) Controller Module Replacement

Step	Description
13	Snap the program card ESD shield into place by pressing the two plastic push pins on each side of the shield.
14	Remove the ESD grounding strap from the cabinet and your wrist.
15	Enter the SET FAILOVER COPY=OTHER_CONTROLLER command to copy the configuration information from the good (other) controller to this new controller.
16	Enter the SHOW THIS_CONTROLLER FULL to ensure that the dual-redundant configuration has been created. Enter the SHOW UNITS, SHOW DEVICES, and SHOW STORAGESETS as applicable.
17	Close and lock the cabinet door.

Figure 5–9 OCP Cable, HSJ Array Controller

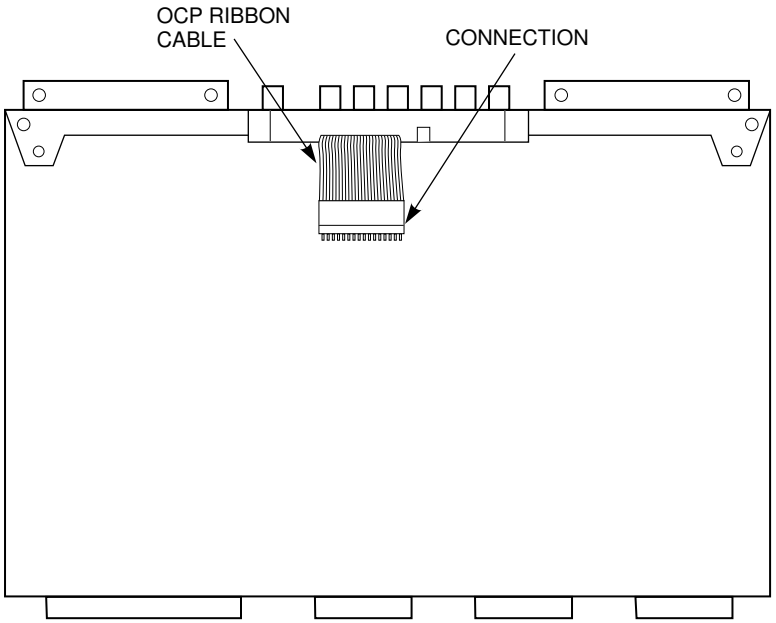

Figure 5–10 Controller Shelf Rails

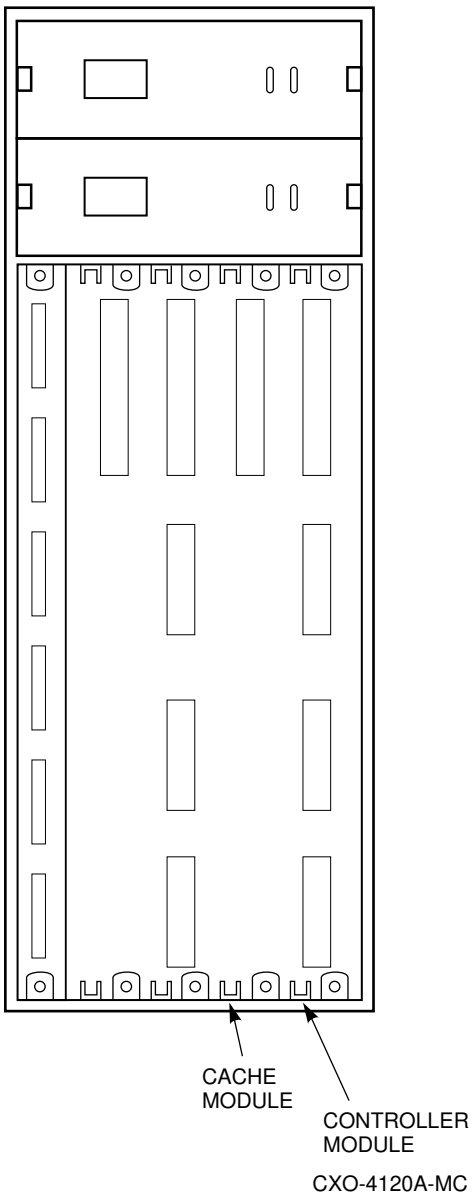

5.15 How to Physically Replace a Cache Module

Use the procedure in Table 5–5 to replace your cache module.

CAUTION

For safety reasons, only qualified personnel may remove or replace write-back cache modules. For complete instructions for replacing the write-back cache module, refer to the *StorageWorks Array Controllers HS Family of Array Controllers Service Manual*.

Table 5–5 Cache Module Replacement

Step	Description
1	The controller module is seated in front of the cache module. Anytime you service a cache module, you must consider when it is appropriate to remove the controller module (based on considerations of configuration, down time, and so on).
2	To replace the cache module, its controller module must already be removed. (You should replace the cache module before reinstalling the controller module.)
3	Ground yourself to the cabinet grounding stud (refer to Figure 5–7).
4	Slide the cache module into the shelf using its slot's leftmost rails as guides (refer to Figure 5–10).
5	Press firmly and use a gentle up-and-down rocking motion on the module until it is seated. Finally, press firmly once more to make sure the module is seated.
6	Replace the controller module (Refer to Section 5.14).

5.16 Checking the Status of the Write-Back Cache Module Batteries

You will receive a console message when the write-back cache module batteries are low. However, to check the battery status, you may enter the SHOW THIS_CONTROLLER or SHOW OTHER_CONTROLLER commands from the CLI. The battery status will be GOOD, LOW, or BAD.

If your write-back batteries do not recharge in the allotted time, they need to be replaced. Only qualified service personnel may replace write-back cache module batteries. Refer to the *StorageWorks Array Controllers HS Family of Array Controllers Service Manual* for complete instructions for removing and replacing the batteries.

Digital recommends that you have your write-back cache batteries replaced every 5 years.

5.17 Using the Controller SHUTDOWN Command Prior to Turning Off Controller Power

If you wish to turn off the power to your controller subsystem for any reason (such as a long holiday, system move, replacing a bad SCSI host cable, and so forth), make sure you turn off the power properly by using the following steps:

CAUTION

If the correct steps for turning off the power to an HS array controller configuration with write-back cache are not followed, there is a potential for loss of data that may exist on any devices connected to the HS array controllers.

1. Use the proper procedures for shutting down your operating system if the host system is also going to be turned off.

   If the host is not going to be turned off, a shut down of the host system is not necessary, but use the proper operating system procedures to dismount any units that are accessed through the HS array controllers.

2. When the dismount and/or the operating system shutdown procedures are complete, invoke the controller SHUTDOWN commands on the HS array controllers.

CAUTION

Do not turn off the power to the controller subsystem until all shutdown procedures have successfully completed.

3. If you have a dual-redundant controller configuration, shutdown each controller one at a time. If you have a single terminal CLI interface, such as a VAXcluster Console System (VCS), use the following commands:

```
CLI> SHUTDOWN OTHER_CONTROLLER
CLI> SHUTDOWN THIS_CONTROLLER
```

   If you have a non-redundant controller configuration, only the SHUTDOWN THIS_CONTROLLER command is necessary.

4. Only when the controller SHUTDOWN command has successfully completed, should you turn off power to the controller subsystem (or just the controller shelf, if you are not shutting down the entire system, by unplugging the power supplies in the controller shelf).

5. If the controller configuration contains any devices or storagesets that are write-back cache enabled, and the system is going to be turned off for an extended length of time, the batteries on the write-back cache modules will drain, causing the data in the cache modules to be lost.

After restoring power to the system, and restarting the controllers, check the battery status before accessing any write-back enabled units from the operating system. The battery status must say ''good,'' unless the CACHE_POLICY=B qualifier is set. Remember that if you have the CACHE_ POLICY=B set, and you decide to use your RAIDsets or mirrorsets, you risk losing data if power should be lost before the batteries have recharged. To verify the status of the batteries, enter the following commands:

```
CLI> SHOW THIS_CONTROLLER
```

or

```
CLI> SHOW OTHER_CONTROLLER
```

If the battery status is not ''good,'' you will not be able to access the RAIDset or mirrorset units until the batteries have recharged unless you have the SET THIS_CONTROLLER or SET OTHER_CONTROLLER CACHE_POLICY=B qualifier set.

Note

The CACHE_POLICY=A and CACHE_POLICY=B qualifiers are available for HS array controllers using firmware Version 2.5 or greater.

5.18 Using DISMOUNT or SHUTDOWN Before Moving Devices

Whenever you need to move devices to another shelf or another system, you must flush any cached data to those devices first.

- **For HSJ or HSD30 Array Controllers:** If you have RAIDset or mirrorset units, or single devices with write-back caching turned on, you must dismount (host operating system command) the units to be moved in order to flush all data from the cache.
- **For HSZ Array Controllers:** If you have RAIDset or mirrorset units, or single devices with write-back caching turned on, you may use one of the following methods to rundown the metadata:
  - Use the controller SHUTDOWN command
  - Set NORUN on all units

6

Working with RAID Arrays

6.1 HS Array Controller Family RAID Overview

Note

For discussions in this manual, the term stripesets refers to RAID level 0, the term mirrorsets refers to RAID level 1, and the term RAIDsets refers to RAID level 5 (with RAID level 3 features).

The disk striping, mirroring, and RAID level 5 facilities of the HS family of array controllers provide you with a variety of options for varying the cost, performance, and data availability characteristics of disk storage attached to the controllers. The disk striping facility (RAID 0) included with the basic HSOF (firmware) provides high I/O performance for applications requiring either high I/O request rates or high data transfer rates. The mirroring facility (RAID 1) provides maximum availability, protecting data against disk failure by replicating all data stored. The RAID facility in conjunction with the write-back cache module, combines elements of RAID level 5 and RAID level 3 technology to provide improved availability over striping (with reduced performance), but less availability than mirroring (at lower cost).

To use these RAID facilities effectively, you need to make some configuration decisions. Study the controller's CLI commands listed in this chapter and in Appendix B to configure your stripesets, mirrorsets, and RAIDsets.

In the HS array controller firmware, the RAID level 5 facility uses a distributed data mapping technique just like that used for disk striping. A powerful measure of protection against hardware component failure is added by reserving some of the blocks in each RAIDset's disks for the storage of redundant information. This redundant information allows the contents of any block of application data stored in the RAIDset to be *regenerated* in the case of a disk failure (as long as the remaining RAIDset members are functioning properly).

RAID levels 3 and 5 are sometimes called parity RAID levels, because the redundant information they store is in the form of a parity block which corresponds to data blocks in each of the RAIDset's disks. *Parity* is any kind of checksum that allows the regeneration of unretrievable data. Parity is typically combined with data stored in positionally corresponding blocks of other disks in the RAIDset to regenerate the missing data.

For detailed information about RAID technology, refer to *The RAIDBOOK—A Source for RAID Technology* published by The RAID Advisory Board, St. Peter, MN.

6.1.1 RAID Level 0

RAID level 0 is known as striping. Striping spreads data across multiple disks, breaking the user data into segments designated as ‘‘chunks.’’ In a four disk stripeset, A, B, C, and D, for example, the first chunk is written on disk A, the second on disk B, the third on disk C, the fourth on disk D, the fifth on disk A, and so on.

CAUTION

If any member of a RAID level 0 stripeset fails, all data is lost from the entire set.

The system administrator sets the chunk size based upon application requirements. If the chunk size is set to be relatively large relative to the average input/output (I/O) size, all of the disks may be able to execute different read/write requests simultaneously. If there are large numbers of frequently accessed files, this may be especially beneficial.

If the chunk size is set significantly smaller than the average I/O size, then most or all of the disks in the stripeset will be able to transfer data for a single request in parallel. This method increases the data transfer rate for large I/Os.

RAID level 0 provides high performance for a wide variety of I/O intensive applications. Depending on the hardware configuration and the chunk size, RAID level 0 improves either data transfer rate or I/O request rate.

6.1.2 RAID 0 & 1

HSOF Version 2.5 supports RAID level 0 & 1, which is described as stripesets whose members are mirrorsets—called striped mirrorsets.

6.1.3 RAID Level 1

RAID level 1 (disk mirroring) protects data against disk failure by replicating all data on each member of the mirrorset. RAID level 1 offers extremely high data reliability, albeit at a relatively high cost (because all disks and connecting hardware are duplicated). For some I/O intensive applications, a RAID level 1 array can improve performance significantly over a single disk.

The HS array controller Mirroring Option includes the following features:

- Real-time maintenance of up to six identical copies of data on mirrorsets of separate disks or storagesets attached to a single HS array controller.
- Striping of mirrorsets, for high-performance access to large amounts of highly available data. This feature allows for the addition of mirroring to disks that are currently stripeset members (for users with existing stripesets who wish to use mirroring technology).
- Automatic replacement of a failed member of a mirrorset with a spare disk, if a suitable (sufficiently large) spare disk has been designated. As with the RAID level 5 (RAIDsets) option, either a best-fit or a best-performance replacement policy may be designated.
- Inclusion of multiple disk types in a single mirrorset (the capacity of the mirrorset unit is bounded by that of the smallest disk in the mirrorset).
- Ability to increase or decrease the number of members in a mirrorset as requirements change.

- Flexible policy options for determining both how read requests are satisfied and the speed of copying when a new member is being added.

In addition the mirroring option supports a feature which allows a system administrator to create an identical copy of any HS array controller disk or stripeset unit, and then dissociate it from the original. This feature is called ‘‘cloning.’’ Many users will find this feature helpful for doing back up operations of an application’s data by:

- Making clones of its disk or stripeset unit
- Momentarily quiescing the application
- Dissociating the clones from the primary units
- Reenabling the application with only the primary units

Like the RAID level 5 option, the mirroring option is integrated with the controllers’ dual-redundant failover capability, protecting data access from controller failure as well as disk failure. Also, like the RAID level 5 option, write performance can be enhanced by enabling write-back caching of user data for each mirrorset.

6.1.4 RAID Level 3

Industry standard RAID level 3 achieves higher bandwidths as a result of transferring a part of each I/O’s data from each RAIDset member in parallel. To achieve high bandwidths with conventional fixed-block disks (typically 512 data bytes in size), all I/O requests must specify an amount of data equal to the member block size, multiplied by the number of members in the RAIDset, minus one. Also, the requests’ starting addresses must be aligned so that correspondingly located data from each member is transferred. To permit this data transfer to take place in parallel, industry standard RAID level 3 often requires special disks or configurations to ensure that all disks in the RAIDset are rotating in perfect synchronization.

Industry standard RAID level 3 performs as though the RAID level 3 RAIDset is a single disk with a specific large (virtual) sector size. This results in substantial performance penalties for I/Os that are not perfectly aligned multiples of the larger data byte size. Few applications use extremely large I/O sizes (and these may not easily be modified to use a multiple of the RAID level 3 virtual sector size). In any event, many operating systems can not easily accommodate virtual disks with unconventional sector sizes.

Digital’s implementation of RAID level 3 for the HSJ, HSD30, and HSZ40 array controllers achieves higher bandwidth levels without the virtual sector size or special device/configuration disadvantages. This is achieved with special algorithms related to RAID level 5 technology, but without the write performance penalty associated with conventional RAID level 5 (but not with conventional RAID level 3) implementation.

For convenience, this capability is controlled by setting the RAIDset’s chunk size to a lower value, and performing sequential write operations (in write-back mode). This permits higher bandwidth performance results approaching industry standard RAID level 3 operation. With the capability of setting chunk size, you can conveniently choose between more bandwidth-oriented or more throughput-oriented performance using the same configuration and CLI commands. When you specify intermediate chunk sizes, you realize large I/O benefits from RAID level 3 technology, while getting smaller I/O benefits from RAID level 5 technology.

Note

Chunk size is set with the CLI INITIALIZE CHUNKSIZE= command (refer to Appendix B).

6.1.5 RAID Level 5

RAID level 5 stripes data and rotates parity across all disks in the RAIDset. The controller combines incoming data with existing parity data.

RAID level 5 is suited for applications whose I/O loads consist predominantly of a large number of asynchronous read requests. Transaction processing and office automation applications often fall into this category. It also is good for data transfer intensive applications, such as image analysis, which make mostly read requests. It is not as well suited for write intensive applications (such as data entry, scientific or engineering data collection).

Note

If using RAID level 5, all data in the RAIDset will be lost if a second drive fails in the same set before the first failed drive is repaired.

6.2 RAID Array Terminology

The following are terms used with HS array controller RAID array technology:

- COPYING member—In a mirrorset, a copying member is a member that was introduced to the mirrorset after it has been is use for some amount of time. None of the blocks can be guaranteed to be the same as other members (in contrast to NORMALIZING, where all blocks written since creation are known to be the same), therefore it is made the same by copying all the data from a NORMAL member. When all of the blocks on the COPYING member are the same as those on the NORMAL member, the COPYING member becomes a NORMAL member. Until it becomes NORMAL, the COPYING member contains undefined data and is not useful for any purpose.
- Chunksize—The number of blocks written to one RAIDset or stripeset member before data is written to the next RAIDset or stripeset member. For HSOF Version 2.5, the default chunksize is 128 blocks. For stripesets the maximum chunksize is 32,768 blocks.
- Container—Any entity capable of storing data, whether it is a physical device or a group of physical devices. A disk, a stripeset, and a RAIDset are examples of containers.
- Failedset—A group of disk drives that have been removed from RAIDsets or mirrorsets due to a failure or manual removal. Disk drives in the failedset should be considered potentially defective and should be tested and repaired before being placed in the spareset pool or back in their original locations.
- Mirrorset—A virtual disk drive consisting of multiple physical disk drives, each of which contains a complete and independent copy of the entire virtual disk's data.

- Nominal membership—The desired number of mirrorset members when the mirrorset is fully populated with active devices. If a member is removed from a mirrorset, the actual number of members may fall below the ‘‘nominal’’ target.
- NORMAL member—A mirrorset member whose entire contents is guaranteed to be the same as all other NORMAL members. All NORMAL members are exactly equivalent.
- NORMALIZING member—A mirrorset member whose contents is the same as all other NORMAL and NORMALIZING members for data that has been written since the mirrorset was created or lost cache data was cleared. Data that has never been written may differ among NORMALIZING members. When a mirrorset is brought online, if no NORMAL members are present, one of the NORMALIZING members is chosen and set to NORMAL. This NORMAL member becomes the source of data for making all remaining NORMALIZING members the same. The mirrorset is made completely NORMAL when all of the source data has been copied. NORMALIZING state occurs in two situations:
  - During initialization after the mirrorset is first created by CLI.
  - After a cache data lost (CDL) situation has been cleared by the user. Note that all data written prior to clearing CDL is undefined. All data written after clearing CDL is consistent across the mirrorset.

  All mirrorset members enter NORMALIZING state together, and at the proper time, one is chosen as the NORMAL member. If this NORMAL member then fails out of the mirrorset, then any of the other NORMALIZING members may be chosen as the new NORMAL member.
- Parity—Any kind of checksum that allows the regeneration of unretrievable data. Parity is typically combined with data stored in positionally corresponding blocks of other disks in the RAIDset to regenerate the missing data.
- RAIDset—A virtual disk drive with its physical data spread across multiple physical disks. A RAIDset contains parity data to be used to regenerate data in the event that one member fails.
- RAIDset states
  - Normal state—All members are present and all data is redundant.
  - Reduced state—A failed RAIDset member has been detected and removed from the RAIDset.
  - Reconstructing state—All members are present and redundancy is being restored.
    * Reconstruct types (process of restoring redundancy to the RAIDset)

      There are two different types of reconstruct: one that takes place when a unit is created from a RAIDset; the other takes place when a failed RAIDset member is replaced. Each kind indicates a different error recovery operation/choice that the controller will make.
      - Initial reconstruct—Establishes initial redundancy following an ADD RAIDset...ADD UNIT command sequence. Note that all data written by the host is immediately fully redundant.

When a RAIDset is initialized using the INITIALIZE command, the controller does not take the lengthy period of time to make all the parity blocks consistent with the data. Instead, the controller marks all the parity blocks as bad and starts a reconstruct. The reconstruct recalculates and rewrites the parity blocks and marks them as good. This process allows the RAIDset to be used immediately. All new data written to the RAIDset is immediately fully redundant.

- Reconstructing a replaced member—Regenerates the data for that member and restores redundancy.

  ''Reconstruct'' means to restore redundancy. This could be either recalculating the parity or recalculating a user data block, using the remaining blocks.

  When a reduced RAIDset has a member added back to it, all the blocks on the replacement member are marked as bad (parity and user data blocks), and a reconstruct scan is started. The reconstruct recalculates the parity blocks on the new member and recalculates the user data blocks on the new member, writes the blocks, and marks the blocks good.

Note

If a second RAIDset member fails during a reconstruct operation, the RAIDset becomes inoperative.

To determine which type of reconstruct is taking place, enter the SHOW RAIDSETS command. If more than one reconstructing member is identified, the controller is performing an initial reconstruct.

- Redundancy—A RAIDset is considered to be redundant when user data is recorded directly to one member, and all of the other members and associated parity also are recorded. If a member is missing from the RAIDset, its data can be regenerated as needed, but the RAIDset is no longer redundant until the missing member is replaced and reconstructed.
- Regenerate—The process of calculating missing data from the redundant data.
- Replacement policy—The firmware controlled method by which a spare disk is selected to replace a disk that has failed in a RAIDset or mirrorset. Your replacement policy choices are BEST_FIT, BEST_PERFORMANCE, or NOPOLICY. Refer to the ADD RAIDSET, ADD MIRRORSET, and SET *raidset-container-name* CLI commands in Appendix B.
- Spareset—A pool of disk devices available to the controller to replace failed RAIDset or mirrorset members.
- Stripe—The data and parity from the associated chunks of each member of the RAIDset.
- Stripe size—The capacity determined by *n*–1 times the chunksize. (*n* is the number of RAIDset members.)
- Stripeset—A virtual disk drive with its data spread across multiple physical disks. (For HSOF V2.5 the stripeset chunksize maximum is 32,768 blocks.)

6.3 RAIDset and Mirrorset Rules and Important Information

The following list gives rules to remember about RAIDsets and mirrorsets:

- You must always have a write-back cache module when creating RAID level 5 RAIDsets or mirrorsets.
- Do not attempt to use any RAIDset or mirrorset commands with mismatched cache modules. Both cache modules must be write-back cache, and both must have the same number of megabytes.
- You must purchase licenses for write-back caching, RAID level 5 and mirroring functionality. If you use these facilities without entering a valid license key, you will receive an hourly error message at the terminal, and an hourly error in the host error log. Once you enter your key, the error message stops.

Note

You may activate write-back caching, RAID level 5, and mirroring via the firmware licensing system (FLS) utility.

- NOWRITEBACK_CACHE (write-through caching) is automatically set for units created from RAIDsets or mirrorsets. To increase the unit's performance, switch to WRITEBACK_CACHE.
- RAIDsets may be made up of 3 to 14 members. Mirrorsets may be from 2 to 6 members.
- **For HSJ and HSD30 array controllers**, RAIDsets and mirrorsets in a dual-redundant configuration flush cache and failover to the companion controller if the write-back cache module battery for *one* controller in the pair has a low charge and CACHE_POLICY=B is set.

  For HSZ40 array controllers, RAIDsets and mirrorsets in a dual-redundant configuration do *not* failover when the write-back cache battery has a low charge no matter which cache policy is set.
- RAIDsets and mirrorsets will go inoperative (and write-protected) if *both* write-back cache modules' batteries fail, or if a single cache's batteries fail in a nonredundant controller. Any stripesets will flush cache data and become write-through (cache module acts as read cache) instead of write-back. RAIDsets and mirrorsets become operational when the batteries become fully charged again.

Note

When the power for the write-back cache module batteries is too low, a console message is displayed. You can check the status of the batteries at any time by entering the CLI SHOW THIS_CONTROLLER command (or SHOW OTHER_CONTROLLER as appropriate). Depending on which cache policy you choose, your RAIDsets and mirrorsets will either go inoperative (CACHE_POLICY=A) or remain available in write-through mode (CACHE_POLICY=B) when the batteries go low.

- Your RAIDsets can achieve the high performance characteristics of RAID level 3 provided you set your RAIDset chunksize to the minimum value (16) and your application calls for large sequential I/O operations.
- RAIDsets and mirrorsets can contain disks of different sizes, but the disk space used by the storageset is limited to the maximum size of the smallest disk in the RAIDset.
- Place RAIDset and mirrorset members on different ports. This keeps your storageset from going inoperative in the event that a single port bus failure occurs.
- You may have a combined maximum total of 20 mirrorsets and RAIDsets.
- You may have a combined maximum total of 30 storagesets (mirrorsets, RAIDsets, stripesets).
- You can have no more than 32 physical device members for a unit (practically this applies to RAID 0 & 1 configurations).

6.4 Avoiding Unwanted Unwritten Cached Data Conditions

Write-back cache is required for RAID functionality. Therefore, you may experience situations that leave unwanted unwritten cache data in the write-back cache module. This section should help remedy some of those situations.

Unwritten cached data can remain in cache for reasons other than a power failure. To avoid some of these situations when write-back cache is enabled, follow these recommendations:

- When configuring dual-redundant controllers for failover, make sure the target controller (the controller you are copying configuration information ''to'') has no cache errors or unwritten cached data. Delete any units on the target controller to verify there are no cache errors, before entering the SET FAILOVER command.
- Do not take a dual-redundant controller pair out of failover (by entering the SET NOFAILOVER command) with unwritten cached data present in the write-back cache modules. Doing so will destroy data. Enter the SHOW THIS_CONTROLLER and SHOW OTHER_CONTROLLER commands to confirm that cached data has been written.

Note

When the SET NOFAILOVER command is issued, the other controller shuts down.

- When write-back caching is enabled on a unit and that unit fails, the cached data for that unit is unwriteable. The data for other write-back cached units on the same controller are still intact and the write-back cache module is still fully functional. However, in order to clear that portion of the write-back cache module's memory that now contains data from the failed unit, you need to enter the CLEAR_ERRORS UNWRITEABLE_DATA command.
- In order to force a cache data flush of an *online* unit, enter the SET *unit* NOWRITEBACK_CACHE command. This forces a flush of any outstanding write data (completes within several minutes).

- If there is inactivity across the bus of the destination device for more than the time set by the CACHE_FLUSH_TIMER= qualifier (or the 10 second default), any outstanding write data is automatically flushed to the inactive devices.
- Write-back cache modules must not be moved from their backplane slots *unless* all unwritten write cached data has been flushed. To determine whether all cache data has been flushed, use the SHOW THIS_CONTROLLER (or SHOW OTHER_CONTROLLER) command to check cache status.

  In the event of a write-back cache module mismatch due to wrong cache module placement, the CLI error INVALID_CACHE is displayed. This error indicates that the controller detects unwritten cached data outstanding for its cache, but that the cache module in the slot is not the correct one. The serial number of the write-back cache module that belongs in the slot is given.

  You may use the CLI command CLEAR_ERRORS INVALID_CACHE to clear errors associated with a cache module mismatch. *Do not* use this command except in cases of hardware failures or hardware upgrades. *Always* attempt to first find and install the correct cache module, because entering this command will *destroy* the unwritten cached data.

6.4.1 Using CLI Commands with Write-Back Cache

You can specify whether you want write-back cache enabled (with the WRITEBACK_CACHE qualifier) or disabled (with the NOWRITEBACK_CACHE qualifier) when you initially issue an ADD UNIT command. The NOWRITEBACK_CACHE qualifier (write-through) is the default.

After a unit is added, if you want to disable or enable your write-back cache, enter the CLI SET *unit-number* command and specify either the WRITEBACK_CACHE qualifier or the NOWRITEBACK_CACHE qualifier.

A write-back cache module is required for RAID operations.

Write-back caching, RAID 3/5, and mirroring are separately licensed features. You can use these licensed features on a trial basis, but if you do not buy the required licenses an hourly message is sent to your console terminal and to the host error log. Once you buy the required licenses, you are given license keys to be used with the **firmware licensing system (FLS)** utility. After the keys are entered, the messages stop. See Section 7.3.6.

When the power for the write-back cache module batteries is too low, a console message is displayed. To check the status of the batteries on the write-back cache module, enter the SHOW THIS_CONTROLLER or SHOW OTHER_CONTROLLER command at the CLI prompt. The battery status of the cache module is displayed as good, low, or bad.

6.5 Planning Your RAIDsets

The following items should be considered before creating your RAIDsets:

- RAIDset size (3 to 14 members)
- RAIDset chunk size
- RAIDset replacement policy
- RAIDset reconstruction rate
- RAIDset spares

- RAIDset configurations for availability and performance
- RAIDset hardware requirement

6.5.1 Creating a RAIDset

Enter the following commands to create a RAIDset:

1. Use the ADD DISK *container-name SCSI-location* command to add new disk drives to your configuration and name them.

   ```
   CLI> ADD DISK DISK0 1 0 0
   ```

2. Use the ADD RAIDSET *container-name container-name1 container-name2 [container-nameN]* command and set the appropriate replacement policy and reconstruct qualifiers. You are not required to set a replacement policy or reconstruct rate.

   The following is an example for using the replacement policy and reconstruct qualifiers on the same command line as the ADD RAIDSET command:

   ```
   CLI> ADD RAIDSET R3 DISK100 DISK200 DISK300 POLICY=BEST_FIT
        RECONSTRUCTION=NORMAL
   ```

   Where:

   R3 is the name assigned to the RAIDset.

   DISK100, *DISK200*, and *DISK300* are the names assigned to the RAIDset members of a three-member RAIDset.

   POLICY=BEST_FIT is the replacement policy qualifier that will be used when a RAIDset member fails. (You can choose between three different replacement policy qualifiers: POLICY=BEST_FIT, POLICY=BEST_PERFORMANCE, or NOPOLICY.)

   RECONSTRUCTION= *rate* is the reconstruction rate qualifier that is used when a RAIDset member fails and a new member is taken from the spareset as a replacement for the failed device. You can choose between two reconstruct qualifiers: RECONSTRUCT=NORMAL (the default), or RECONSTRUCT=FAST.

3. Enter the INITIALIZE command for your RAIDset. This is the time to specify your chunk size. The metadata on the container (in this case, the RAIDset) must be initialized before a unit may be created from it. If the container's metadata cannot be found, or is incorrect, an error will be displayed and the unit will not be created.

   ```
   CLI> INITIALIZE R3 CHUNKSIZE=n
   ```

   Where *n* is the chunk size in blocks. The default chunk size is 128 blocks.

   or

   ```
   CLI> INITIALIZE R3 CHUNKSIZE=DEFAULT
   ```

   Where the controller determines the chunk size.

4. Enter the ADD UNIT *unit-number container-name* command to create a host accessible logical unit from the RAIDset, followed by the appropriate qualifier for cache transfer sizes, preferred path, cache access, write protection, and so forth (as described in Appendix B).

   ```
   CLI> ADD UNIT D170 R3
   ```

   Where:

   D170 is the unit name.

   R3 is the RAIDset name.

5. Enter the SHOW RAIDSETS command to display all of the RAIDsets known to the controller. By adding the FULL qualifier, more information concerning all of the known RAIDsets is displayed.

   To show information about a particular RAIDset, enter the SHOW *raidset-container-name* command. Where *raidset-container-name* is the name assigned to the particular RAIDset.

6. Using the ADD SPARESET command, populate the spareset pool with disk drives that closely match the geometry of the other disk drives in your subsystem.

Refer to Appendix B for descriptions and examples for choosing and using the appropriate ADD UNIT qualifiers.

6.5.2 Storageset SHOW Commands

The term storageset is used to refer to RAIDsets, stripesets, or mirrorsets. The following CLI SHOW commands are used to display the status of your RAIDsets:

Enter the following CLI command to display all RAIDsets known to the controller:

```
HSJ> SHOW RAIDSETS
Name          Storageset                    Uses             Used by
------------------------------------------------------------------------------

RAID0         raidset                       DISK100          D0
                                            DISK300
                                            DISK400
                                            DISK500
```

Enter the following CLI command to display additional information about all RAIDsets known to the controller:

```
HSJ> SHOW RAIDSETS FULL
Name          Storageset                      Uses             Used by
------------------------------------------------------------------------------

RAID0         raidset                         DISK100          D0
                                              DISK300
                                              DISK400
                                              DISK500
        Switches:
          POLICY (for replacement) = BEST_PERFORMANCE
          RECONSTRUCT (priority) = NORMAL
          CHUNKSIZE = 128 blocks
        State:
          RECONSTRUCT 3% complete on member DISK500
          DISK100   (member 0) is RECONSTRUCTING
          DISK300   (member 1) is RECONSTRUCTING
          DISK400   (member 2) is RECONSTRUCTING
          DISK500   (member 3) is RECONSTRUCTING
  Size: 2050353 blocks
```

Enter the following CLI command to display information about a particular RAIDset:

```
HSJ> SHOW RAID0
Name          Storageset                      Uses             Used by
------------------------------------------------------------------------------

RAID0         raidset                         DISK100          D0
                                              DISK300
                                              DISK400
                                              DISK500
        Switches:
          POLICY (for replacement) = BEST_PERFORMANCE
          RECONSTRUCT (priority) = NORMAL
          CHUNKSIZE = 128 blocks
        State:
          NORMAL
   DISK100   (member 0) is NORMAL
   DISK300   (member 1) is NORMAL
   DISK400   (member 2) is NORMAL
   DISK500   (member 3) is NORMAL
         Size 2050353 blocks
```

Enter the following CLI command to display all information about all stripesets known to the controller:

```
HSJ> SHOW STRIPESETS FULL
Name          Storageset                      Uses             Used by
------------------------------------------------------------------------------

STRIPE0       stripeset                       DISK110          D1
                                              DISK210
                                              DISK310
        Switches:
          CHUNKSIZE = 128 blocks
        State:
   NORMAL
   DISK110   (member 0) is NORMAL
   DISK210   (member 1) is NORMAL
   DISK310   (member 2) is NORMAL
  Size: 2050353
```

Enter the following CLI command to display all information about all storagesets known to the controller:

```
HSJ> SHOW STORAGESETS FULL

Name          Storageset                      Uses             Used by
------------------------------------------------------------------------------

STRIPE0       stripeset                       DISK110          D1
                                              DISK210
                                              DISK310
        Switches:
          CHUNKSIZE = 128 blocks
        State:
   NORMAL
   DISK110   (member 0) is NORMAL
   DISK210   (member 1) is NORMAL
   DISK310   (member 2) is NORMAL
  Size: 2050353

RAID0         raidset                         DISK100          D401
                                              DISK300
                                              DISK400
        Switches:
          POLICY (for replacement) = BEST_PERFORMANCE
          RECONSTRUCT (priority)  = NORMAL
          CHUNKSIZE = 128 blocks
        State:
          NORMAL
          DISK100
   DISK300
   DISK400

SPARESET      spareset                        DISK310
                                              DISK600

FAILEDSET     failedset                       DISK200

CMD100        passthrough                     DISK100          D610
```

6.5.3 Adding and Deleting Spareset Members

The spareset is a pool of disk drives available to the controller to replace failing members of a RAIDset or mirrorset. The ADD SPARESET command adds disk drives to the spareset pool and initializes the metadata on the drives so they may be used for replacements into RAIDsets and mirrorsets. The DELETE SPARESET command removes disk drives from the spareset.

Note

The spareset cannot be deleted, it is always available.

Enter the following CLI commands to add one or more disks to the spareset:

```
HSJ> ADD SPARESET disk-container-name0 [disk-container-nameN]

Example: HSJ> ADD SPARESET DISK100
         HSJ> ADD SPARESET DISK100 DISK200 DISK300
```

Enter the following CLI commands to remove one or more disks from the spareset:

```
HSJ> DELETE SPARESET disk-container-name0 [disk-containter-nameN]

Example: HSJ> DELETE SPARESET DISK100
         HSJ> DELETE SPARESET DISK100 DISK200 DISK300
```

Enter the following command to show the spareset:

```
HSJ> SHOW SPARESET

Name          Storageset                    Uses             Used by
------------------------------------------------------------------------------

SPARESET      spareset                      DISK310
                                            DISK600
```

6.5.4 Showing and Deleting Failedset Members

The Failedset is a group of disk drives that were removed from RAIDsets or mirrorsets because they failed or were manually removed (via the SET *RAIDset-container-name REMOVE=disk-container-name command*). Drives in the Failedset should be considered defective. These drives must be tested and repaired before placing them back in operation.

The DELETE FAILEDSET command removes drives from the failedset so that they can be physically removed from the device shelves for testing and repair. Enter the following commands to show, and then remove, one or more disk drives from the failedset:

```
CLI> DELETE FAILEDSET DISK99
CLI> DELETE FAILEDSET DISK99 DISK88 DISK77
```

Enter the following CLI command to show a failedset:

```
HSJ> SHOW FAILEDSET

Name          Storageset                    Uses             Used by
------------------------------------------------------------------------------

FAILEDSET     failedset                     DISK200
```

Note

A failedset cannot be deleted, it is always available.

6.5.5 Changing RAIDset Characteristics

To change certain characteristics of a RAIDset, use the SET *RAIDset-container-name* command.

When a RAIDset looses a member, a new member is automatically added to the RAIDset from the spareset pool (providing you have a replacement policy set, and an appropriate spare is in the spareset). If you specified NOPOLICY, when you created your RAIDset, or you wish to change your replacement policy, enter one of the following commands:

```
CLI> SET RAIDset-container-name POLICY=BEST_FIT
CLI> SET RAIDset-container-name POLICY=BEST_PERFORMANCE
CLI> SET RAIDset-container-name NOPOLICY
```

To change the speed at which a RAIDset will be reconstructed when a new member is added to the RAIDset, or immediately after the RAIDset is initialized, enter one of the following commands:

```
CLI> SET RAIDset-container-name RECONSTRUCT=NORMAL
CLI> SET RAIDset-container-name RECONSTRUCT=FAST
```

If you need to remove a disk member from a RAIDset, enter the following command:

```
CLI> SET RAIDset-container-name REMOVE=disk-container-name
```

For example:

```
CLI> SET R3 REMOVE=DISK100
```

If the RAIDset is already in a reduced state when the REMOVE= qualifier is used, an error is printed and the command is rejected. If a replacement policy is specified, the replacement drive is automatically taken from the spareset to replace the removed member using the specified policy.

If NOPOLICY is specified, the RAIDset continues to operate in a reduced state until a replacement is manually specified or a policy is specified. The disk drive removed via the REMOVE= qualifier is automatically added to the failedset.

To manually place a disk member into a reduced RAIDset when NOPOLICY was specified, enter the following command:

```
CLI> SET RAIDset-container-name REPLACE=disk-container-name
```

For example:

```
CLI> SET R3 REPLACE=DISK550
```

Where *R3* is the RAIDset name, and *DISK550* is the replacement disk name.

The disk called DISK550 is added to the reduced RAIDset (R3). A reconstruct operation begins immediately on the newly added disk (as long as the reconstruct is not disabled).

Note

No other qualifiers can be used with the SET *RAIDset-container-name* command when either the REPLACE or REMOVE qualifiers are specified.

6.5.6 Deleting a RAIDset

Use the DELETE *container-name* command to delete a RAIDset. This command determines whether the container (RAIDset) is used by a unit. If the container is in use, an error is printed and the container is not deleted. If the container is not is use, it is deleted.

Enter the following command to delete a RAIDset:

```
CLI> DELETE container-name
```

For example:

```
CLI> DELETE R3
```

Where *R3* is the name of the RAIDset being deleted.

6.5.7 Moving a RAIDset

You may physically relocate some or all of a RAIDset's member devices according to the following procedure:

CAUTION

If you lose track of the RAIDset members at any point during this procedure, you will have to attempt to restore the RAIDset by guessing where its members are installed. There is currently no way to retrace your steps using the controller or HS operating firmware.

To move a RAIDset you must do the following:

1. Make note of all devices comprising the RAIDset. Digital recommends marking them after using the CLI> LOCATE command to find all RAIDset members.
2. Delete the UNIT that uses the RAIDset with the DELETE *unit-number* command.
3. Delete the RAIDset with the DELETE *container-name* command.
4. Delete each disk from that RAIDset with the DELETE *container-name* command.
5. Physically remove the disks from the storage shelf.
6. Move the disks to the new port/target/LUN (PTL) location.
7. Add each disk with the ADD DISK *container-name SCSI-location* command using the new **PTL** location.
8. Re-add the RAIDset with the ADD RAIDSET *container-name container-name1 container-name2 [container-nameN]* command. Make sure you create it from the exact, original set of drives.

CAUTION

Do *not* initialize the RAIDset or you will destroy its data.

9. Recreate the logical unit from the RAIDset with the ADD UNIT *unit-number container-name* command.

The following example shows the unit ''D100'' made of RAIDset ''RAID99.'' ''RAID99'' has member disks at PTLs 200, 210, and 400. The member at PTL 210 can be relocated to PTL 300 as follows:

```
CLI> DELETE D100
CLI> DELETE RAID99
CLI> DELETE DISK210

(Move the disk to PTL 300.)

CLI> ADD DISK DISK300 3 0 0
CLI> ADD RAIDSET RAID99 DISK200 DISK300 DISK400
CLI> ADD UNIT D100 RAID99
```

If you move a RAIDset from one controller to another and you damage one member, you must specify all of that RAIDset's members when you re-add the RAIDset to the new controller. The controller will automatically reduce the RAIDset when it discovers that one member is inoperative.

Using the REDUCED Qualifier with the ADD RAIDset Command

Only use the REDUCED qualifier (with the ADD RAIDSET command) when you want to move a RAIDset that is already reduced. For example, you have a four member RAIDset that has been reduced to a three member RAIDset on Controller A and you wish to move the RAIDset to Controller B. Physically move the three members to Controller B and enter the following command:

```
CLI> ADD RAIDSET container-name container-name1 container-name2
     container-name3 REDUCED
```

For example:

```
CLI> ADD RAIDSET R3 DISK100 DISK300 DISK400 REDUCED
```

6.6 Adding a Stripeset (RAID Level 0)

Use the ADD STRIPESET *container-name container-name1 container-name2* command to add a stripeset and to name that stripeset. This command must be used when a new stripeset is added to a controller's configuration. A stripeset may contain from 2 to 14 members. To create a stripeset, add the individual disks, add the stripeset and name it, initialize the stripeset, and then create and name a unit from the stripeset as shown in the following example:

```
CLI> ADD DISK DISK99 1 0 0
CLI> ADD DISK DISK88 2 0 0
CLI> ADD DISK DISK77 3 0 0
CLI> ADD STRIPESET STRIPE0 DISK99 DISK88 DISK77
CLI> INITIALIZE STRIPE0
CLI> ADD UNIT D0 STRIPE0
```

6.6.1 Moving a Stripeset or Stripeset Member

You may physically relocate some or all of a stripeset's member devices. However, if you lose track of the stripeset members at any point during the relocation, you will have to attempt to restore the stripeset by guessing where its members are installed. There is currently no way to retrace your steps using the controller or HS operating firmware.

You the same procedure as described in Section 6.5.7 to move a stripeset or stripeset member.

6.6.2 Showing Stripesets

The SHOW STRIPESET command displays all the stripesets known by the controller. The SHOW STRIPESET FULL gives more information about all stripesets known to the controller. By entering the SHOW *stripeset-container-name* command, you are given specific information about a particular stripeset.

```
CLI> SHOW STRIPESET
CLI> SHOW STRIPESET FULL
CLI> SHOW stripeset-container-name
CLI> SHOW UNITS FULL
```

6.7 Planning Your Mirrorsets

The following items should be considered before creating your mirrorsets:

- Mirrorset size (1 to 6 members)
- Mirrorset replacement policy
- Mirrorset spares
- Mirrorset hardware requirements—write-back cache module
- Mirrorset firmware requirements—HSOF Version 2.5 firmware

6.8 Using Mirrorsets to Obtain Snapshot Copies of Data

A mirrorset is a storageset consisting of multiple devices, each containing an identical copy of the same data. Because individual devices can be added and removed from a mirrorset while it is in use (with minimal impact on the mirrorset), and because removed members contain a complete copy of all the data on the mirrorset at the time of removal, mirroring is used in some system management situations to obtain snapshot copies of data.

The general strategy used in these situations contains the following steps:

1. During normal, steady-state operation, run the unit with the number of drives appropriate for the availability required.
2. When the time comes to take a snapshot of the data, activate mirroring on the unit in question (if it is not already active), and add a physical disk into the mirrorset. As with the addition of any new mirrorset member, the mirroring facility copies the data from the existing members to the new ‘‘snapshot’’ member.
3. When the copy to the snapshot member is complete, extract the snapshot member from the mirrorset. In some situations, the application is quiesced so that there is no activity to the mirrorset when the snapshot member is extracted; other situations are insensitive to when the snapshot member is extracted.
4. If mirroring is not the normal steady-state mode for the unit, deactivate mirroring (UNMIRROR) on the unit that was copied.
5. Set the snapshot copy aside for use as a ready backup. Alternatively, the snapshot copy can be mounted and a conventional backup utility run against it to backup the contents to tape. This latter approach allows the backup utility to be run at locations and times more convenient to system operation than the traditional fixed backup window.

Some file systems and applications recommend against mirror snapshots as a backup strategy, because the snapshot technique is not well suited to the way they use data. But for some systems, mirror snapshots are a useful technique.

The HS controllers contain the following mirrorset commands to ease the task of using mirroring to obtain data snapshots:

1. The MIRROR and UNMIRROR commands allow a specific disk to be converted from a disk container to a mirrorset and back again to a simple disk container, all while the disk is in use. This means that units that will be snapshot do not have to be configured permanently as mirrorsets; mirroring can be activated and deactivated on the units only for the time it takes to obtain the snapshot.

2. The REDUCE command allows multiple disks to be simultaneously removed from multiple mirrorsets as a single, synchronized operation. This permits snapshot copies of stripesets and striped mirrorsets in a way that retains the integrity of the entire stripeset.
3. The NODESTROY option on the INITIALIZE command permits the snapshot copy to be configured and added as a unit (distinct from the original) without destroying any of the data.

6.9 Mirrorset Considerations for Snapshot Copies

If you want to use mirroring to create a snapshot copy of data, consider the following:

1. The only useful snapshot is a snapshot of all the data on a unit. This is because the host sees the unit as a single integrated storage space, and the host uses this storage space without regard to any physical boundaries in the underlying disks.

   This means that if the unit is layered on one or more storagesets, *all* devices in the storageset must be snapshot at the same time.

   Thus, if the unit is layered on a simple disk container, then the snapshot need only involve one disk. Likewise, if the unit is layered on a simple mirrorset, the snapshot need only involve one disk (because for mirrorsets, all members are equivalent). For stripesets and striped mirrorsets, however, multiple snapshot disks are involved, one for each member of the stripeset.

   To preserve the host view of the data, when you configure the snapshot unit to gain access to the snapshot data, you must carefully configure the snapshot in a manner identical to the configuration *at the time the snapshot member was removed from the mirrorset*. Since all snapshot disks will have been mirrorset members at the time of removal, they must be defined as mirrorset members when used in the snapshot unit as well. Therefore:

   - A snapshot of a single disk unit must be configured as a single-member mirrorset
   - A snapshot of a mirrorset unit must be configured as a single-member mirrorset
   - A snapshot of a stripeset must be configured as a stripeset of single-member mirrorsets
   - A snapshot of striped mirrorsets must be configured as a stripeset of single-member mirrorsets

   See the CLONE utility discussion in Section 7.3.12 for examples of this consideration in practice.
2. Mirroring snapshots cannot be used for RAIDset units. They can only be used to snapshot the data in disk, simple mirrorset, simple stripeset, or striped mirrorset units.
3. The bulk of the overhead in making a snapshot is consumed during the copy phase. Once the snapshot member copy is complete (it is in the NORMAL state), it is kept current with all other members from then on. Thus, the extraction of the snapshot from the mirrorset can be done with similar results at any time after the copy is complete. Because the extraction operation is quick, it can be synchronized manually with host activity in any convenient fashion.

4. The extraction of the snapshot member is done with the REDUCE command. The copy must be done before the REDUCE will be honored. If multiple snapshot members are involved (as they will be if you are copying the data on a stripeset or striped mirrorset), then all copies on all members must be complete.
5. Snapshot disks must be the same size or larger than the disk members they will be used to copy.
6. The snapshot unit will be an *identical* copy of the original, right down to volume labels and file system information that is normally unique. If you wish to access the snapshot copy on the same system as the original while the original is still active, you need to take the appropriate steps to override the host system's usual protections against such duplication.
7. Any unit created by CLONE has a mirrorset level in the configuration heirarchy, even if the original unit did ot have mirroring. The target disk of a single disk unit is mirrored then added and initialized by CLONE. Because the target disk is initialized as a mirrorset member, CLONE makes it into a single-member mirrorset to preserve the metadata before adding it as a unit.
8. The CLONE utility is a handy means of automating snapshot copies if you don't want to manage the details yourself (see Section 7.3.12).

6.10 Steps for Creating a Mirrorset

This section describes the steps neccessary to capture a snapshot copy of the data on a single disk container. These steps can be accomplished automatically by the CLONE utility. Following are the specific steps to making a snapshot copy using the HS mirroring facility:

1. Identify the unit to be copied.
2. Use SHOW commands to determine the individual disk devices that make up the unit and their sizes.

```
CLI> SHOW DEVICES
CLI> SHOW STORAGESETS FULL
```

3. Identify the unused disks that you will use as the snapshot targets.
4. If the unit is a simple disk or simple stripeset unit, use the MIRROR command to convert *each* disk in the unit to a one-member mirrorset. If the unit is already layered on a mirrorset or striped mirrorset, this step is not necessary. If the unit being snapshot is a simple stripeset, you will create a *distinct* mirrorset for each member.

```
CLI> MIRROR disk-device-name container-name
```

5. The unit should now be layered entirely on mirrorsets. Use SHOW commands to satisfy yourself that this is the case.
6. For each mirrorset in the unit, set the replacement policy to NOPOLICY. This will provide more precise control over which snapshot targets are used for each disk.

```
CLI> SET mirrorset-container-name NOPOLICY
```

7. For each mirrorset in the unit, use the SET MEMBERSHIP command to increase the nominal membership of the mirrorset by one. This will provide the member slot for the snapshot member.

```
CLI> SET mirrorset-container-name MEMBERSHIP=n
```

8. For each mirrorset in the unit, use the SET REPLACE= command to add the target snapshot disk you desire into that mirrorset. At this point, the copy to the snapshot disk will begin.

```
CLI> SET mirrorset-container-name REPLACE=disk-device-name
```

9. Monitor *all* the mirrorsets for copy completion. When *all* members are in normal state, the extraction can be done.

```
CLI> SHOW THIS_CONTROLLER
CLI> SHOW OTHER_CONTROLLER
```

10. Extract *all* snapshot members from *all* the mirrorsets in the unit with a *single* REDUCE command. Name each of the snapshot disks on the same line; all will be removed at once.

```
CLI> REDUCE disk-device-name1 disk-device-name2
```

11. For each device that you issued a MIRROR command, issue an UNMIRROR command to eliminate the temporary mirrorset. If the unit is layered on permanent mirrorsets, do not perform this command.

```
CLI> UNMIRROR disk-device-name1
```

12. For each permanent mirrorset in the unit, use the SET MEMBERSHIP command to reduce the nominal membership back to where it was when you started.

```
CLI> SET mirrorset-container-name MEMBERSHIP=n
```

13. For each permanent mirrorset, use the SET POLICY= command to restore the replacement policy you want during normal operation.

```
CLI> SET mirrorset-container-name POLICY= BEST_FIT or BEST_PERFORMANCE
```

6.10.1 Configuring Host Units into Mirrorsets

Now that you have the snapshot copies in the form of the individual snapshot disks, the following steps are necessary to configure usable host units from those disks:

1. If the snapshot is of a striped mirrorset, for each of the snapshot disks, create a one-member mirrorset consisting solely of the snapshot disk. For example:

```
CLI> ADD MIRROR  mirrorset-name-1 snapshot-disk-name-1
CLI> ADD MIRROR  mirrorset-name-2 snapshot-disk-name-2
```

Then create a stripeset consisting of the mirrorsets just defined:

```
CLI> ADD STRIPESET stripeset-name mirrorset-name-1 mirrorset-name-2
```

If the snapshot is of a stripeset, create a stripeset consisting of each of the constituent snapshot disks:

```
CLI> ADD STRIPESET stripeset-name snapshot-disk-name-1 snapshot-disk-name-2
```

If the snapshot is of a simple disk or a simple mirrorset, the snapshot disk is used as a simple disk device.

2. Initialize the snapshot stripeset or device using the NODESTROY option. Only initialize the *top* storageset on which you are going to add the unit. If you copied a stripeset or striped mirrorset unit, initialize the stripeset created in step 1 above. If you copied a simple disk or mirrorset unit, initialize the simple disk unit that resulted.

   If you are initializing a stripeset or striped mirrorset, specify the same chunksize as that on the original stripeset or striped mirrorset.

   ```
   CLI> INITIALIZE container-name NODESTROY CHUNKSIZE=n
   ```

3. Add the host-visible unit with an ADD UNIT command.

6.11 Mirrorset Command Overview

The sections that follow describe mirrorset procedures, commands, and qualifiers.

6.11.1 Creating a Mirrorset

Enter the following commands to create a mirrorset:

1. Add the disks to be used for the mirrorset (unless they have already been added):

   ```
   CLI> ADD DISK DISK120 1 2 0 NOTRANSPORTABLE
   CLI> ADD DISK DISK220 2 2 0 NOTRANSPORTABLE
   CLI> ADD DISK DISK320 3 2 0 NOTRANSPORTABLE
   ```

   For the best performance and data protection, your mirrorset members should reside on different ports.

2. To create your mirrorset:

   ```
   CLI> ADD MIRRORSET MIRR1 DISK120 DISK220 DISK320
   CLI> INITIALIZE MIRR1
   CLI> ADD UNIT DO MIRR1
   ```

3. To display all of the information about your newly created mirrorset:

   ```
   CLI> SHOW MIRR1
   ```

4. To display all of the information about all of the mirrorsets known to your controller:

   ```
   CLI> SHOW MIRRORSETS FULL
   ```

6.11.2 Mirrorset SET Commands and Qualifiers

Use the **SET** *mirrorset-container-name* command and one of its qualifiers to change the characteristics of a mirrorset as listed:

```
CLI> SET MIRR1 MEMBERSHIP= number-of-members
CLI> SET MIRR1 REPLACE= disk-device-name
CLI> SET MIRR1 REMOVE= disk-device-name
CLI> SET MIRR1 POLICY= policy-type
CLI> SET MIRR1 READ_SOURCE= read-source
CLI> SET MIRR1 COPY= copy_speed
```

The following are the **SET** *mirrorset-container-name* qualifiers and descriptions for using them:

- MEMBERSHIP= *number-of-members*—Allows you to increase or decrease the nominal membership of a mirrorset to the number you specify in *number-of-members*. If the mirrorset membership is increased, and automatic sparing is turned on, the mirrorset automatically brings in spares until the new number of members is attained, or until no more suitable spares are available. Membership cannot be decrease below the number of active members. Remove members first, then reduce membership.
- REPLACE= *disk-device-name*—Allows you to add mirrorset members to an existing mirrorset. There are two conditions for using this qualifier:
  - The replacement policy must be set to NOPOLICY.
  - The mirrorset must be missing at least one member.

  If these two conditions are met, the physical device is added to the mirrorset you named. The nominal number of members does not change.
- REMOVE= *disk-device-name*—Allows you to remove a member from an existing mirrorset. If the physical disk you specify is not a member of the mirrorset you specified, or if the mirrorset will not have a NORMAL or NORMALIZING member after the disk is removed, an error is reported and no action is taken. If the disk removal is successful, the removed disk is added to the failedset, and a new disk member is auto-spared into the mirrorset (if applicable). The nominal number of members in the mirrorset does not change. If for some reason the auto-sparing does not take place, the mirrorset automatically adds the spare when an acceptable spare becomes available or when the replacement policy changes.
- REDUCE *disk-device-name1 [disk-device-nameN]*—Allows you to remove members from an existing mirrorset. Refer to Section 6.11.4.
- POLICY= *policy-type*—Allows you to set the desired automatic replacement policy for disks that fail out of a mirrorset.
  - BEST_FIT gives highest priority to finding a replacement device within the spareset that closely matches the sizes of the remaining members of the mirrorset. If several spareset members are the same size, the best performance algorithm is used to determine the best device to add to the mirrorset.
  - BEST_PERFORMANCE (default) gives the highest priority to finding a replacement device that is on a different port than any of the current mirrorset members. If several spareset members are on different ports, then the best fit algorithm is used to determine the best device to add to the mirrorset.

If there are no spareset members that are at least the size of the mirrorset, then the mirrorset is left with the reduced number of members.

- NOPOLICY—Allows you to turn off the autosparing capability. Allows you to remove a failing device from a mirrorset without selecting a replacement. This causes the mirrorset to run in a reduced state until a BEST_FIT or BEST_PERFORMANCE policy is selected, or a member is manually replaced in the mirrorset. If the BEST_FIT or BEST_PERFORMANCE policy is set and an acceptable spare is made available, the spare is automatically added to the mirrorset.
- READ_SOURCE= *read-source*—Allows you to control the read algorithm for the specified mirrorset. Choose from the following:
  - ROUND_ROBIN—Each NORMAL mirrorset member is the target of a read in sequential membership order. No preference is given to any NORMAL member.
  - LEAST_BUSY (default)—The NORMAL mirrorset member with the least busy work queue is the target of the read.
  - Preferred member—The specified member is used for all reads.
- COPY= *copy_speed*—Allows you to specify the speed at which mirrorset copies are performed. The copy_speed choices are as follows:
  - NORMAL copies the mirrorset using minimal resources.
  - FAST copies the mirrorset using multiple resources, thus speeding up the copy, but slowing down normal I/O.

6.11.3 Mirrorset SHOW Commands

SHOW MIRRORSETS—Displays all configured mirrorsets.

SHOW MIRRORSETS FULL—Additional information will be displayed after each mirrorset.

SHOW *mirrorset-container-name*—Displays the same information as SHOW MIRRORSETS FULL, except that it only displays information for the mirrorset specified by *mirrorset-container-name*.

6.11.4 REDUCE *disk-device-name1* Command

The REDUCE *disk-device-name1 [disk-device-nameN]* command is use for removing multiple members from mirrorsets that make up a stripeset. For a consistent copy of the stripeset, all members MUST be removed at the same time (not individually). The REDUCE command is similar to the SET *mirrorset-container-name* REMOVE= *device-name* command except that the nominal number of members in the mirrorset are decrease by the number of members removed, and the devices are not placed in the failedset.

The disk devices to be removed need not be members of the same mirrorset, but the devices MUST be part of the same unit. No autosparing occurs and each mirrorset membership is set to the new reduced number of members. For each mirrorset that you reduce, at least one remaining NORMAL member must remain in the mirrorset. If not, none of the specified mirrorsets are reduced.

6.11.5 MIRROR *disk-device-name container-name* Command

Allows you to convert a physical device to a one member mirrorset.

```
CLI> MIRROR disk-device-name mirrorset-container-name
```

For example:

```
CLI> MIRROR DISK100 MR1
```

6.11.6 UNMIRROR disk_device-name

Allows you to convert a one member mirrorset back to a physical device.

```
CLI> UNMIRROR disk-device-name
```

Refer to Section 7.3.12 for mirrorset examples performed by the CLONE utility.

6.12 RAIDset and Mirrorset Availability, Performance, and Cost

RAIDset size (and RAID level) recommendations depend on whether availability, performance, or cost is the priority for creating RAIDsets. Tradeoffs must be made because no single RAID level provides the perfect balance of availability, performance, and cost. You need to determine what your priorities are before creating your RAIDsets or stripesets.

For availability and performance, it is important to put each RAIDset member on a different port (bus). This keeps the RAIDset from going inoperative in the event of a single port failure, and also provides better performance.

RAID level 5 is more economical for large RAIDsets than smaller RAIDsets because the cost of the parity blocks is amortized across a larger number of devices. However, large RAIDsets statistically have higher failure rates.

Stripesets provide high performance and a lower cost (no parity disk to buy), but do not provide redundancy for availability.

Mirrorsets provide maximum availability and potentially improved read performance, but at the greatest cost.

7
Diagnostics and Utilities

This chapter contains descriptions and instructions for running the following HS array controller local programs and for using command disks:

- DILX
- TILX
- VTDPY
- FLS
- CONFIGURE (CONFIG)
- CFMENU utility
- Code Patch/Code Patch (CLCP) utility
- CLONE utility
- Command disks

C_SWAP utility and FMU are not described in this chapter. Refer to Section 5.11 for information regarding the Controller Warm Swap (C_SWAP) utility. Refer to the *StorageWorks Array Controller HS family of Array Controllers Service Manual* for instructions for using the Fault Management utility (FMU).

For error reporting information, refer to the *StorageWorks Array Controller HS Family of Array Controllers Service Manual*.

7.1 Initialization Diagnostics

Any of the following actions cause the controller to initialize:

- A power-up cycle
- A firmware reset
- Pressing the reset (//) button on the controller's OCP
- A host clear

During a controller initialization sequence, the controller diagnostics run automatically. Refer to Section 5.1 for a complete description of the initialization diagnostics.

If a hard failure occurs anytime during the initialization sequence, the controller OCP LEDs indicate an error. An error is displayed at the maintenance terminal the next time the prompt is returned. If no message displays, press the Return key on the terminal's keyboard and the error message should display.

7.2 Connecting to the Controller

You can connect to the controller using a maintenance terminal connected to the EIA–423 terminal port, or a virtual (host) terminal using a diagnostic utility protocol (DUP) connection, or for HSZ40 array controllers, an HSZterm connection to the terminal port.

7.3 HS Array Controller Local Programs

The HS array controller firmware includes a set of local programs and features that include the following:

- DILX (disk inline exerciser)
- TILX (tape inline exerciser)
- VTDPY (gathers and displays system state and performance information)
- FLS (licensed software for RAID and write-back cache)
- CONFIGURE (adds new devices automatically to your configuration)
- FMU (displays last failure and memory system failure information and controls the spontaneous event logging and last failure logging displays)
- CFMENU (a menu-driven configuration tool)
- Code Load/Code Patch (CLCP) utility
- CLONE utility
- Command disks

The following sections describe each local program and how it is used.

7.3.1 DILX

The **disk inline exerciser** (DILX) is a diagnostic tool used to exercise the data transfer capabilities of selected disks connected to an HSJ, HSD30, or HSZ array controller. DILX exercises disks in a way that simulates a high level of user activity.

Note

If you have an HSZ array controller, you can only run DILX from a maintenance terminal connected directly to the HSZ controller's front bezel.

Using DILX, you can test only single disk units in read or write modes (no storagesets). DILX also can be run on CD–ROMs, but must be run only in *read-only* mode. Thus, DILX can be used to determine the health of a controller and the disks or CD–ROMs connected to it and to acquire performance statistics.

You can run DILX from a maintenance terminal, VCS, or virtual terminal (refer to Section 8.3.1). If you are attaching a VCS, you must have it plugged into the EIA–423 maintenance port.

DILX allows for autoconfiguring of drives. This allows for quick configuring and testing of all units at once. Please be aware that *customer data will be lost* by running this test. Digital recommends only using the Auto-Configure option during initial installations.

Error reports identify logical units, and also may identify physical devices. Therefore, if errors occur while running against a unit, its storageset should be reconfigured as individual devices, and then DILX run again, against the individual devices.

There are no limitations on the number of units DILX may test at one time. However, Digital recommends only using DILX when no host activity is present. If you must run DILX during a live host connection, you should limit your testing to no more than half of any controller's units at one time. This conserves controller resources and minimizes performance degradation on the live units you are not testing.

DILX and the tape inline exerciser (TILX) may run concurrently with one exerciser initiated from a maintenance terminal and the other from a virtual terminal connection. If you have a dual-redundant controller configuration, you can run DILX from a maintenace terminal connected to one controller, and run TILX from another maintenance terminal connected to the other controller. Digital recommends however, that both exercisers *not* be run while normal I/O operations are in progress, as system performance will degrade due to the heavy load the exercisers impose on the controller.

7.3.1.1 Invoking DILX

Note

Before running DILX, be sure that all units that you wish to test have been dismounted from the host.

The following describes how to invoke DILX from a maintenance terminal at the CLI> prompt, from a VCS, or from a virtual terminal through a DUP connection.

To invoke DILX from a maintenance terminal, enter the following command at the CLI> prompt (or HSx> prompt, if set):

```
CLI> RUN DILX
```

To invoke DILX from the maintenance terminal port using a VCS, enter the following command at the CLI> prompt:

```
CLI> VCS CONNECT device_name
```

Where *device_name* is the controller's SCS node name.

Consult the *VAXcluster Console System User's Guide* for complete details on using VCS.

Note

The *device_name* **must** be specified for a VCS.

To invoke DILX from a virtual terminal using a DUP connection, enter the command (for the OpenVMS operating system):

```
$ SET HOST/DUP/SERVER=MSCP$DUP/TASK=DILX SCS_nodename
```

Specify the controller's *SCS node-name* to indicate where DILX will execute (for HSJ and HSD30 array controllers only).

7.3.1.2 Interrupting DILX Execution

Use the following guidelines to interrupt DILX execution:

Note

The circumflex symbol (^) is equivalent to the Ctrl key. You must press and hold the Ctrl key and type the character key given.

Note

Do not enter Ctrl/G from a VCS, because it causes VCS to terminate. VCS acts on the sequence, and the sequence never gets sent to DILX. Use Ctrl/T when interrupting DILX from a VCS.

- Ctrl/G causes DILX to produce a performance summary. DILX continues normal execution without affecting the run-time parameters.
- Ctrl/C causes DILX to produce a performance summary, stop testing, and prompts the *reuse parameters* question.
- Ctrl/Y causes DILX to abort. The *reuse parameters* question is not prompted.
- Ctrl/T causes DILX to produce a performance summary. DILX then continues executing normally without affecting any of the run-time parameters.

7.3.1.3 Running DILX

CAUTION

DILX allows autoconfiguring disk drives. This allows for quick configuring and testing of all units at once. Be aware that customer data is lost when running this test. Digital recommends using the Auto-Configure option only during initial installation.

The following text and examples are meant to be an overview of DILX, not an all-encompassing procedure for running DILX. Refer to the *StorageWorks Array Controllers HS Family of Array Controllers Service Manual* for specific instructions for running DILX and TILX (including abort codes, error codes, and so forth).

There are two DILX tests:

- Basic function test
- User-Defined test

Note

The basic function test will be your test of choice most of the time. The user-defined test is needed only for special problems.

Basic Function Test

The basic function test for DILX executes in four phases:

- **Initial Write Pass**—Is the only optional phase and is always executed first (if selected). The initial write pass writes the selected data patterns to the entire specified data space or until the DILX execution time limit has been reached. Once the initial write pass has completed, it is not reexecuted no matter how long the DILX execution time is set. The other phases are reexecuted on a 10-minute cycle.
- **Random I/O**—Simulates typical I/O activity with random transfers from one byte to the maximum size I/O possible within the prevailing memory constraints. Note that the length of all I/Os is in bytes and is evenly divisible by the sector size (512 bytes). Read, write, access, and erase commands are issued using random logical block numbers (LBNs).

  In the read/write mode, DILX issues the read and write operations in the ratio you selected using the read/write ration parameter, and issues access and erase commands also in the ratio you specified using the access/erase ration parameter.

  When read-only mode is chosen, only read and access commands are issued.

  If compare operations are enabled, they are performed on write and read commands using read/compare and write/compare operations and DILX internal checks. The percentage of compare operations to perform can be specified. This phase is executed 60 percent of the time. It is the first phase executed after the initial write pass has completed. It is reexecuted at 10-minute intervals with each cycle lasting approximately 6 minutes.
- **Data Intensive**—Designed to test disk throughput by selecting a starting LBN and repeating transfers to the next sequential LBN that has not been written to by the previous I/O. The transfer size of each I/O equals the maximum sized I/O that is possible within the prevailing memory constraints. This phase continues performing spiraling I/O to sequential tracks.

  Read and write commands are issued in read/write mode. This phase is executed 20 percent of the time after the initial write pass has completed. This phase always executes after the random I/O phase. It is reexecuted at 10-minute intervals with each cycle lasting approximately 2 minutes.
- **Seek Intensive**—Is designed to stimulate head motion on the selected disk units. Single sector erase and access commands are issued if the test is write enabled. Each I/O uses a different track on each subsequent transfer. The access and erase commands are issued in the ratio that you selected using the access/erase ratio parameter. This phase is executed 20 percent of the time after the initial write pass has completed. This phase always executes after the data intensive I/O phase. It is reexecuted at 10-minute intervals with each cycle lasting approximately 2 minutes.

CAUTION

The User Defined test in DILX should be run by *knowledgeable personnel only*, otherwise, customer data can be destroyed.

User-Defined Test

When you select the User-Defined test, DILX prompts you for input to define a specific test. In the User-Defined test, a total of 20 or fewer I/O commands can be defined. Once all of the commands are issued, DILX issues the commands again in the same sequence. This is repeated until the selected time limit is reached. As you build the test, DILX collects the following information from you for each command:

- The I/O command name (write, read, access, erase, or quit). Quit is really not a command. Instead, it indicates to DILX that you have finished defining the test.
- The starting logical block number (LBN)
- The size of the I/O in 512 byte blocks
- The MSCP command modifiers

For a detailed description of the various DILX tests and questions that DILX prompts you, refer to the *StorageWorks Array Controllers HS Family of Array Controllers Service Manual*.

7.3.2 DILX Examples

Note

The following examples of DILX can be run on HSJ and HSD30 array controllers only. If you have an HSZ array controller, refer to the HSZ40 array controller example.

In the first example, all functions are chosen for DILX. The SCS node name is MASS1. DILX was invoked from a virtual terminal using a DUP connection from an OpenVMS VAX system. This is an extensive (long) run for the following reasons that the initial write pass was chosen.

7.3.2.1 Using All Functions (Long Run)

In Example 7–1, when no answer appears after the question mark (?), the user chose the default (indicated within brackets [ ]).

CAUTION

This test writes to disks. All user data is destroyed.

Example 7–1 Using All Functions

```
$ SHOW CLUSTER/CONTINUOUS
View of Cluster from system ID 9038  node: ENGHRN 7-AUG-1994 14:54:01
      SYSTEMS       MEMBERS
  NODE   SOFTWARE   STATUS
```

(continued on next page)

Example 7–1 (Cont.) Using All Functions

```
 ENGHRN  VMS V5.5  MEMBER
 FORCE   HSC V700
 WODWND  VMS V5.5  MEMBER
 CYMBAL  VMS V5.5  MEMBER
 LUTE    VMS V5.5  MEMBER
 MASS2   HSJ V20J
 MASS1   HSJ V20J

(Entered a Ctrl/C here.)

DUP>SET HOST/DUP/SERVER=MSCP$DUP MASS1/TASK=DILX
%HSCPAD-I-LOCPROGEXE, Local program executing - type ^\ to exit

Disk Inline Exerciser - version 2.0

The Auto-Configure option will automatically select, for testing, half or
all of the disk units configured. It will perform a very thorough test with
*WRITES* enabled. The user will only be able to select the run time and
performance summary options and whether to test a half or full configuration.
The user will not be able to specify specific units to test.
The Auto-Configure option is only recommended for initial installations.

Do you wish to perform an Auto-Configure (y/n) [n] ?

Use all defaults and run in read only mode (y/n) [y] ?n
Enter execution time limit in minutes (1:65535) [10] ?45
Enter performance summary interval in minutes (1:65535) [10] ?45
Include performance statistics in performance summary (y/n) [n] ?y
Display hard/soft errors (y/n) [n] ?y
Display hex dump of Error Information Packet Requester Specific
information (y/n) [n] ?y
When the hard error limit is reached, the unit will be dropped from testing.
Enter hard error limit (1:65535) [65535] ?
When the soft error limit is reached, soft errors will no longer be
displayed but testing will continue for the unit.
Enter soft error limit (1:65535) [32] ?
Enter IO queue depth (1:20) [4] ?10
  *** Available tests are:
    1. Basic Function
    2. User Defined

Use the Basic Function test 99.9% of the time. The User Defined
test is for special problems only.
Enter test number (1:2) [1] ?1

 **CAUTION**
If you answer yes to the next question, user data WILL BE destroyed.
```

(continued on next page)

Example 7–1 (Cont.) Using All Functions

```
Write enable disk unit(s) to be tested (y/n) [n] ?y
The write percentage will be set automatically.
Enter read percentage for Random IO and Data Intensive phase (0:100) [67] ?
Enter data pattern number 0=ALL, 19=USER_DEFINED, (0:19) [0] ?
Perform initial write (y/n) [n] ?y
The erase percentage will be set automatically.
Enter access percentage for Seek Intensive phase (0:100) [90] ?
Perform data compare (y/n) [n] ?y
Enter compare percentage (1:100) [5] ?
Disk unit numbers on this controller include:
    10
    12
    14
    21
    23
    61
    63
Enter unit number to be tested ?10
Unit 10 will be write enabled.
Do you still wish to add this unit (y/n) [n] ?y
Enter start block number (0:1664214) [0] ?
Enter end block number (0:1664214) [1664214] ?
Unit 10 successfully allocated for testing
Select another unit (y/n) [n] ?y
Enter unit number to be tested ?12
Unit 12 will be write enabled.
Do you still wish to add this unit (y/n) [n] ?y
Enter start block number (0:832316) [0] ?
Enter end block number (0:832316) [832316] ?
Unit 12 successfully allocated for testing
Select another unit (y/n) [n] ?n

   DILX testing started at: 13-JAN-1994 04:52:26
    Test will run for 45 minutes
    Type ^T(if running DILX through VCS) or ^G(in all other cases)
      to get a current performance summary
    Type ^C to terminate the DILX test prematurely
    Type ^Y to terminate DILX prematurely

   DILX Summary at 13-JAN-1994 04:56:20
   Test minutes remaining: 42, expired: 3

Unit 10     Total IO Requests 40794
  Read Count 0   Write Count 40793
  Access Count 0   Erase Count 0
  KB xfer   Read 0   Write 326344   Total 326344
  No errors detected
Unit 12     Total IO Requests 13282
  Read Count 0   Write Count 13281
  Access Count 0   Erase Count 0
  KB xfer   Read 0   Write 106248   Total 106248
  No errors detected
Reuse Parameters (stop, continue, restart, change_unit) [stop] ?

DILX - Normal Termination
HSJ>
```

7.3.2.2 Using All Defaults (Read-Only)

Note

The following example can be used for DILX runs on HSJ and HSD30 array controllers only.

In Example 7–2, DILX is run using all defaults. This is executed in read-only mode. No data on the units under test will be destroyed. The entire user-available LBN range on each disk is accessible for DILX testing. DILX was invoked from a maintenance terminal.

Example 7–2 Using All Defaults (Read-Only)

```
HSJ> SHOW DISK
Name          Type          Port Targ  Lun                    Used by
-------------------------------------------------------------------------------

DISK100       disk             1    0    0                    D10
DISK120       disk             1    2    0                    D12
DISK140       disk             1    4    0                    D14
DISK210       disk             2    1    0                    D21
DISK230       disk             2    3    0                    D23
DISK610       disk             6    1    0                    D61
DISK630       disk             6    3    0                    D63

HSJ> RUN DILX

Disk Inline Exerciser - version 2.0

The Auto-Configure option will automatically select, for testing, half or
all of the disk units configured. It will perform a very thorough test with
*WRITES* enabled. The user will only be able to select the run time and
performance summary options and whether to test a half or full configuration.
The user will not be able to specify specific units to test.
The Auto-Configure option is only recommended for initial installations.

Do you wish to perform an Auto-Configure (y/n) [n] ?n

Use all defaults and run in read only mode (y/n) [y]?y
Disk unit numbers on this controller include:
    10
    12
    14
    21
    23
    61
    63
Enter unit number to be tested ?10
Unit 10 successfully allocated for testing
Select another unit (y/n) [n] ?y
Enter unit number to be tested ?12
Unit 12 successfully allocated for testing
Select another unit (y/n) [n] ?n

   DILX testing started at: 13-JAN-1994 04:47:57
    Test will run for 10 minutes
    Type ^T(if running DILX through VCS) or ^G(in all other cases)
      to get a current performance summary
    Type ^C to terminate the DILX test prematurely
    Type ^Y to terminate DILX prematurely
```

(continued on next page)

Example 7–2 (Cont.) Using All Defaults (Read-Only)

```
   DILX Summary at 13-JAN-1994 04:49:14
   Test minutes remaining: 9, expired: 1

Unit 10     Total IO Requests 4530
  No errors detected
Unit 12     Total IO Requests 2930
  No errors detected
Reuse Parameters (stop, continue, restart, change_unit) [stop] ?

DILX - Normal Termination

HSJ>
```

7.3.2.3 Using Auto-Configure with Half of the All Units Option

In Example 7–3, DILX is run using the Auto-Configure option with the half of all units option:

Example 7–3 Using Auto-Configure with Half of the All Units Option

```
HSJ> RUN DILX

Disk Inline Exerciser - version 2.0

The Auto-Configure option will automatically select, for testing, half or
all of the disk units configured. It will perform a very thorough test with
*WRITES* enabled. The user will only be able to select the run time and
performance summary options and whether to test a half or full configuration.
The user will not be able to specify specific units to test.
The Auto-Configure option is only recommended for initial installations.

Do you wish to perform an Auto-Configure (y/n) [n] ?y

 If you want to test a dual redundant subsystem, it is recommended that
 you pick option 2 on the first controller and then option 2 on the
 other controller. Auto-Configure options are:

      1. Configure all disk units for testing. This is recommended for a
           single controller subsystem.
      2. Configure half of all disk units for testing, this is recommended
         for a dual controller subsystem.
      3. Exit Auto-Configure and DILX.

Enter Auto-Configure option (1:3) [3] ?2

     ****  C a u t i o n  ****

All data on the Auto-Configured disks will be destroyed.
You *MUST* be sure of yourself.

Are you sure you want to continue (y/n) [n] ?y
Enter execution time limit in minutes (1:65535) [60] ?
Enter performance summary interval in minutes (1:65535) [60] ?
Unit 12 successfully allocated for testing
Unit 21 successfully allocated for testing
Unit 61 successfully allocated for testing
```

(continued on next page)

Example 7–3 (Cont.) Using Auto-Configure with Half of the All Units Option

```
   DILX testing started at: 13-JAN-1994 04:39:20
    Test will run for 60 minutes
    Type ^T(if running DILX through VCS) or ^G(in all other cases)
      to get a current performance summary
    Type ^C to terminate the DILX test prematurely
    Type ^Y to terminate DILX prematurely

   DILX Summary at 13-JAN-1994 04:41:39
   Test minutes remaining: 58, expired: 2

Unit 12     Total IO Requests 8047
  No errors detected
Unit 21     Total IO Requests 15239
  No errors detected
Unit 61     Total IO Requests 19270
  No errors detected
Reuse Parameters (stop, continue, restart, change_unit) [stop] ?

DILX - Normal Termination

HSJ>
```

7.3.2.4 Using Auto-Configure with the All Units Option

In Example 7–4, DILX is run using the Auto-Configure option with the all units option:

Example 7–4 Using Auto-Configure with the All Units Option

```
HSJ> RUN DILX

Disk Inline Exerciser - version 2.0

The Auto-Configure option will automatically select, for testing, half or
all of the disk units configured. It will perform a very thorough test with
*WRITES* enabled. The user will only be able to select the run time and
performance summary options and whether to test a half or full configuration.
The user will not be able to specify specific units to test.
The Auto-Configure option is only recommended for initial installations.

Do you wish to perform an Auto-Configure (y/n) [n] ?y

 If you want to test a dual redundant subsystem, it is recommended that
 you pick option 2 on the first controller and then option 2 on the
 other controller. Auto-Configure options are:

      1. Configure all disk units for testing. This is recommended for a
           single controller subsystem.
      2. Configure half of all disk units for testing, this is recommended
         for a dual controller subsystem.
      3. Exit Auto-Configure and DILX.

Enter Auto-Configure option (1:3) [3] ?1

     ****  C a u t i o n  ****

All data on the Auto-Configured disks will be destroyed.
You *MUST* be sure of yourself.
```

(continued on next page)

Example 7–4 (Cont.) Using Auto-Configure with the All Units Option

```
Are you sure you want to continue (y/n) [n] ?y
Enter execution time limit in minutes (1:65535) [60] ?
Enter performance summary interval in minutes (1:65535) [60] ?
Unit 10 successfully allocated for testing
Unit 12 successfully allocated for testing
Unit 14 successfully allocated for testing
Unit 21 successfully allocated for testing
Unit 23 successfully allocated for testing
Unit 61 successfully allocated for testing
Unit 63 successfully allocated for testing

   DILX testing started at: 13-JAN-1994 04:42:39
    Test will run for 60 minutes
    Type ^T(if running DILX through VCS) or ^G(in all other cases)
      to get a current performance summary
    Type ^C to terminate the DILX test prematurely
    Type ^Y to terminate DILX prematurely

   DILX Summary at 13-JAN-1994 04:44:11
   Test minutes remaining: 59, expired: 1

Unit 10     Total IO Requests 9595
  No errors detected
Unit 12     Total IO Requests 5228
  No errors detected
Unit 14     Total IO Requests 10098
  No errors detected
Unit 21     Total IO Requests 9731
  No errors detected
Unit 23     Total IO Requests 5230
  No errors detected
Unit 61     Total IO Requests 11283
  No errors detected
Unit 63     Total IO Requests 5232
  No errors detected
Reuse Parameters (stop, continue, restart, change_unit) [stop] ?

DILX - Normal Termination

HSJ>
```

7.3.2.5 Using Auto-Configure on an HSZ40 Array Controller

Example 7–5 shows a DILX run on an HSZ40 array controller when the Auto-Configure option was chosen. This example also shows some error messages.

Example 7–5 Using Auto-Configure on an HSZ Controller

```
HSZ> SHOW DEVICE
Name          Type          Port Targ  Lun                    Used by
-------------------------------------------------------------------------------

DISK100       disk             1    0    0                    D0
DISK110       disk             1    1    0                    D1
DISK130       disk             1    3    0                    D2
DISK140       disk             1    4    0                    D3
DISK150       disk             1    5    0                    D4
DISK440       disk             4    4    0                    D5
```

(continued on next page)

Example 7–5 (Cont.) Using Auto-Configure on an HSZ Controller

```
HSZ> RUN DILX

Disk Inline Exerciser - version 2.0

It is recommended that DILX only be run when there is no host activity
present on the HSZ. Do you want to continue (y/n) [n]?y

The Auto-Configure option will automatically select, for testing,
all of the disk units configured. It will perform a very thorough test with
*WRITES* enabled. The user will only be able to select the run time and
performance summary options. The user will not be able to specify specific
units to test. The Auto-Configure option is only recommended for initial
installations.

Do you wish to perform an Auto-Configure (y/n) [n] ?y

     ****  C a u t i o n  ****

All data on the Auto-Configured disks will be destroyed.
You *MUST* be sure of yourself.

Are you sure you want to continue (y/n) [n] ?y
Enter execution time limit in minutes (1:65535) [60] ?
Enter performance summary interval in minutes (1:65535) [60] ?
Unit 0 successfully allocated for testing
Unit 1 successfully allocated for testing
Unit 2 successfully allocated for testing
Unit 3 successfully allocated for testing
Unit 4 successfully allocated for testing
Unit 5 successfully allocated for testing
Maximum number of units are now configured

   DILX testing started at: 13-JAN-1994 04:36:17
    Test will run for 60 minutes
    Type ^G to get a current performance summary
    Type ^C to terminate the DILX test prematurely
    Type ^Y to terminate DILX prematurely

  The unit status and/or the unit device type changed unexpectedly.
  Unit 5 dropped from testing

   DILX Summary at 13-JAN-1994 04:40:48
   Test minutes remaining: 56, expired: 4

Cnt err in HEX  IC:03F00402  PTL:00/00/FF  Key:06  ASC/Q:A1/00  HC:1  SC:0
  Total Cntrl Errs   Hard Cnt 1   Soft Cnt 0

Unit 0     Total IO Requests 29779
  No errors detected
Unit 1     Total IO Requests 15810
  No errors detected
Unit 2     Total IO Requests 15816
  No errors detected
Unit 3     Total IO Requests 15816
  No errors detected
Unit 4     Total IO Requests 15816
  No errors detected
Unit 5     Total IO Requests 4035
  Err in Hex: IC 0326450A  PTL:04/04/00  Key:04  ASC/Q:80/06  HC:2  SC:0
  Err in Hex: IC 0328450A  PTL:04/04/00  Key:04  ASC/Q:03/00  HC:1  SC:0
  Total Errs   Hard Cnt 3   Soft Cnt 0
  The unit status and/or the unit device type changed unexpectedly.
  Unit 5 dropped from testing

DILX - Normal Termination
```

(continued on next page)

Example 7–5 (Cont.) Using Auto-Configure on an HSZ Controller

```
HSZ>
```

7.3.2.6 Using the All Units Option on an HSZ40 Array Controller

Example 7–6 shows a DILX run on an HSZ40 array controller without using the Auto-Configure option and choosing all units.

Example 7–6 Using the All Units Option on an HSZ40 Controller

```
HSZ> RUN DILX

Disk Inline Exerciser - version 2.0
It is recommended that DILX only be run when there is no host activity
present on the HSZ. Do you want to continue (y/n) [n] ?y

The Auto-Configure option will automatically select, for testing,
all of the disk units configured. It will perform a very thorough test with
*WRITES* enabled. The user will only be able to select the run time and
performance summary options. The user will not be able to specify specific
units to test. The Auto-Configure option is only recommended for initial
installations.

Do you wish to perform an Auto-Configure (y/n) [n] ?n

Use all defaults and run in read only mode (y/n) [y]?n
Enter execution time limit in minutes (1:65535) [10] ?
Enter performance summary interval in minutes (1:65535) [10] ?
Include performance statistics in performance summary (y/n) [n]?y
Display hard/soft errors (y/n) [n] ?y
When the hard error limit is reached, the unit will be dropped from testing.
Enter hard error limit (1:65535) [65535] ?
When the soft error limit is reached, soft errors will no longer be
displayed but testing will continue for the unit.
Enter soft error limit (1:65535) [32] ?
Enter IO queue depth (1:20) [4] ?5
  *** Available tests are:
    1. Basic Function
    2. User Defined

Use the Basic Function test 99.9% of the time. The User Defined
test is for special problems only.
Enter test number (1:2) [1] ?1

 **CAUTION**
If you answer yes to the next question, user data WILL BE destroyed.
```

(continued on next page)

Example 7–6 (Cont.) Using the All Units Option on an HSZ40 Controller

```
Write enable disk unit(s) to be tested (y/n) [n] ?y
The write percentage will be set automatically.
Enter read percentage for Random IO and Data Intensive phase (0:100) [67] ?
Enter data pattern number 0=ALL, 19=USER_DEFINED, (0:19) [0] ?
Perform initial write (y/n) [n] ?y
Perform data compare (y/n) [n] ?y
Enter compare percentage (1:100) [5] ?
Disk unit numbers on this controller include:
    0
    1
    2
    3
    4
    5
Enter unit number to be tested ?0
Unit 0 will be write enabled.
Do you still wish to add this unit (y/n) [n] ?y
Enter start block number (0:3124637) [0] ?
Enter end block number (0:3124637) [3124637] ?
Unit 0 successfully allocated for testing
Select another unit (y/n) [n] ?y
Enter unit number to be tested ?1
Unit 1 will be write enabled.
Do you still wish to add this unit (y/n) [n] ?y
Enter start block number (0:832316) [0] ?
Enter end block number (0:832316) [832316] ?
Unit 1 successfully allocated for testing
Select another unit (y/n) [n] ?n

   DILX testing started at: 13-JAN-1994 04:47:17
    Test will run for 10 minutes
    Type ^G to get a current performance summary
    Type ^C to terminate the DILX test prematurely
    Type ^Y to terminate DILX prematurely

   DILX Summary at 13-JAN-1994 04:49:08
   Test minutes remaining: 9, expired: 1

Unit 0     Total IO Requests 25190
  Read Count   0   Write Count 25190
  KB xfer   Read 0   Write 201520   Total 201520
  No errors detected
Unit 1     Total IO Requests 6398
  Read Count   0   Write Count 6398
  KB xfer   Read 0   Write 51184   Total 51184
  No errors detected
Reuse Parameters (stop, continue, restart, change_unit) [stop] ?

DILX - Normal Termination

HSZ>
```

7.3.2.7 Using All Defaults on an HSZ40 Array Controller

Example 7–7 shows a DILX run on an HSZ40 array controller without using the Auto-Configure option and using the all defaults option.

Example 7–7 Using All Defaults on an HSZ40 Controller

```
HSZ> RUN DILX

Disk Inline Exerciser - version 2.0
It is recommended that DILX only be run when there is no host activity
present on the HSZ. Do you want to continue (y/n) [n]?y

The Auto-Configure option will automatically select, for testing,
all of the disk units configured. It will perform a very thorough test with
*WRITES* enabled. The user will only be able to select the run time and
performance summary options. The user will not be able to specify specific
units to test. The Auto-Configure option is only recommended for initial
installations.

Do you wish to perform an Auto-Configure (y/n) [n] ?n

Use all defaults and run in read only mode (y/n) [y]?y
Disk unit numbers on this controller include:
    0
    1
    2
    3
    4
    5
Enter unit number to be tested ?0
Unit 0 successfully allocated for testing
Select another unit (y/n) [n] ?y
Enter unit number to be tested ?4
Unit 4 successfully allocated for testing
Select another unit (y/n) [n] ?n

   DILX testing started at: 13-JAN-1994 04:52:56
    Test will run for 10 minutes
    Type ^G to get a current performance summary
    Type ^C to terminate the DILX test prematurely
    Type ^Y to terminate DILX prematurely

   DILX Summary at 13-JAN-1994 04:54:45
   Test minutes remaining: 9, expired: 1

Cnt err in HEX  IC:03164002  PTL:01/00/00  Key:04  ASC/Q:89/00  HC:2  SC:0
  Total Cntrl Errs   Hard Cnt 2   Soft Cnt 0

Unit 0     Total IO Requests 251
  Err in Hex: IC 0326450A  PTL:01/00/00  Key:03  ASC/Q:80/00  HC:1  SC:0
  Err in Hex: IC 02110064  PTL:01/00/00  Key:01  ASC/Q:18/02  HC:0  SC:2
  Err in Hex: IC 0326450A  PTL:01/00/00  Key:01  ASC/Q:18/8B  HC:0  SC:2
  Total Errs   Hard Cnt 1   Soft Cnt 7
Unit 4     Total IO Requests 2101
  No errors detected
Reuse Parameters (stop, continue, restart, change_unit) [stop] ?

DILX - Normal Termination

HSZ>
```

Refer to the *StorageWorks™ Array Controllers HS Family of Array Controllers Service Manual* for more details for running DILX.

7.3.3 TILX

The **tape inline exerciser (TILX)** is a diagnostic tool used to exercise the data transfer capabilities of selected tape drives connected to an HSJ or HSD30 array controller. TILX exercises tapes in a way that simulates a high level of user activity. Thus, TILX can be used to determine the health of the controller and the tape drives connected to it. You can run TILX from the CLI, from VCS, or from a virtual (host) terminal.

DILX and TILX may run concurrently with one initiated from a maintenance terminal and the other from a virtual terminal connection. Digital recommends, however, that both exercisers *not* be run while normal I/O operations are in progress, as system performance will degrade due to the heavy load the exercisers impose on the controller.

7.3.3.1 Invoking TILX

Note

Before running TILX, be sure that all units you wish to test have been dismounted from the host.

The following section describes how to invoke TILX from a maintenance terminal at the CLI> prompt (or HS*x*> prompt if set), from a VCS, or from a virtual terminal through a DUP connection.

CAUTION

TILX should be run ONLY using scratch tapes. This test writes to the tape and destroys any data that exists.

To invoke TILX from a maintenance terminal, enter the following command at the CLI> prompt:

```
CLI> RUN TILX
```

To invoke TILX from the maintenance terminal port using a VCS, enter the following command at the CLI> prompt:

```
CLI> VCS CONNECT device_name
```

where *device_name* is the controller's SCS node name.

Consult the *VAXcluster Console System User's Guide* for complete details on using a VCS.

Note

The *device_name* **must** be specified for a VCS.

To invoke TILX from a virtual terminal, enter the following command (for OpenVMS software):

```
$ SET HOST/DUP/SERVER=MSCP$DUP/TASK=TILX SCS_nodename
```

where *SCS_nodename* indicates where TILX will execute.

7.3.3.2 Interrupting TILX Execution

Use the following guidelines to interrupt TILX execution.

Note

The circumflex symbol (^) is equivalent to the Ctrl key. You must press and hold the Ctrl key and type the character key given.

Note

Do not use Ctrl/G from a VCS, because it causes VCS to terminate. VCS acts on the sequence, and the sequence never gets sent to TILX. Use Ctrl/T when interrupting TILX from a VCS.

- Ctrl/G causes TILX to produce a performance summary. TILX continues normal execution without affecting the run-time parameters.
- Ctrl/C causes TILX to produce a performance summary, stop testing, and prompt the *reuse parameters* question.
- Ctrl/Y causes TILX to terminate. The *reuse parameters* question is not prompted.
- Ctrl/T causes TILX to produce a performance summary. TILX then continues executing normally without affecting any of the run-time parameters.

7.3.3.3 Running TILX

TILX prompts a series of questions needed to collect the parameters to perform a TILX test. Enter ''Y'' to use the defaults for TILX (most of the other TILX questions are not prompted). Enter ''N'' and the defaults are not used. You must then answer each question as it is displayed. For more details and a list of defaults, refer to the *StorageWorks Array Controllers HS Family of Array Controllers Service Manual*.

TILX has the following three tests:

- Basic function test
- User-Defined test
- Read-Only test

For details of these tests refer to *StorageWorks Array Controllers HS Family of Array Controllers Service Manual*.

7.3.4 TILX Examples

The following sections present two TILX examples, one using all functions, the other using all defaults. A read-only test example is not shown.

7.3.4.1 Using All Functions

In Example 7–8, all functions are chosen for TILX using a longer run time and higher record count than the default. The performance statistics and a performance summary are displayed every 10 minutes. In this case, TILX is invoked from a maintenance terminal. This example was run on an HSJ40 array controller.

Example 7–8 Using All Functions

```
HSJ> RUN TILX

Tape Inline Exerciser - version 1.0
Enter TILX hex debug flags (0:ffff) [0] ?

Use all defaults (y/n) [y] ?n
Enter execution time limit in minutes (10:65535) [10] ?
Enter performance summary interval in minutes (1:65535) [10] ?
Include performance statistics in performance summary (y/n) [n]?y
Display hard/soft errors (y/n) [n] ?y
Display hex dump of Error Information Packet requester specific
information (y/n) [n] ?y
When the hard error limit is reached, the unit will be dropped from testing.
Enter hard error limit (1:65535) [32] ?
When the soft error limit is reached, soft errors will no longer be
displayed but testing will continue for the unit.
Enter soft error limit (1:65535) [32] ?
Enter IO queue depth (1:20) [4] ?6
Suppress caching (y,n) [n] ?
  *** Available tests are:
    1. Basic Function
    2. User Defined
    3. Read Only

Use the Basic Function test 99.9% of the time. The User Defined test
is for special problems only.
Enter test number (1:3) [1] ?1
Enter data pattern number 0=ALL, 19=USER_DEFINED, (0:19) [0] ?
Enter record count (1:4294967295) [4096] ?1000
Perform data compare (y/n) [n] ?y
Enter compare percentage (1:100) [2] ?1
Tape unit numbers on this controller include:
    50
    52
Enter unit number to be tested ?50
Is a tape loaded and ready, answer Yes when ready ?y
Unit 50 successfully allocated for testing
Select another unit (y/n) [n] ?y
Enter unit number to be tested ?52
Is a tape loaded and ready, answer Yes when ready ?y
Unit 52 successfully allocated for testing
Maximum number of units are now configured

   TILX testing started at: 13-JAN-1994 04:38:15
    Test will run for 10 minutes
    Type ^T(if running TILX through VCS) or ^G(in all other cases)
      to get a current performance summary
    Type ^C to terminate the TILX test prematurely
    Type ^Y to terminate TILX prematurely

   TILX Summary at 13-JAN-1994 04:40:14
   Test minutes remaining: 9, expired: 1
```

(continued on next page)

Example 7–8 (Cont.) Using All Functions

```
Unit 50   Total IO Requests 724
  Read Count 3   Write Count 681   Reposition Count 3
  Total KB xfer 6718   Read 10   Write 6707
  No errors detected
Unit 52   Total IO Requests 731
  Read Count 3   Write Count 687   Reposition Count 3
  Total KB xfer 6743   Read 10   Write 6733
  No errors detected
Reuse Parameters (stop, continue, restart, change_unit) [stop] ?

TILX - Normal Termination

HSJ>
```

7.3.4.2 Using All Defaults

In Example 7–9, all defaults are chosen for TILX. This is a semiextensive test, even though the test only runs for 10 minutes. The only function not performed is data compares. Data compare operations are time-consuming operations with tape drives. TILX is invoked from a maintenance terminal.

CAUTION

TILX should be run ONLY using scratch tapes. This test writes to the tape and destroys any data that exists.

Example 7–9 Using All Defaults

```
HSJ> SHOW TAPE
Name          Type          Port Targ  Lun                    Used by
-------------------------------------------------------------------------------

TAPE500       tape             5    0    0                    T50
TAPE520       tape             5    2    0                    T52

HSJ> RUN TILX

Tape Inline Exerciser - version 1.0

Use all defaults (y/n) [y] ?
Tape unit numbers on this controller include:
    50
    52
Enter unit number to be tested ?50
Is a tape loaded and ready, answer Yes when ready ?y
Unit 50 successfully allocated for testing
Select another unit (y/n) [n] ?y
Enter unit number to be tested ?52
Is a tape loaded and ready, answer Yes when ready ?y
Unit 52 successfully allocated for testing
Maximum number of units are now configured
```

(continued on next page)

Example 7–9 (Cont.) Using All Defaults

```
   TILX testing started at: 13-JAN-1994 04:35:08
    Test will run for 10 minutes
    Type ^T(if running TILX through VCS) or ^G(in all other cases)
      to get a current performance summary
    Type ^C to terminate the TILX test prematurely
    Type ^Y to terminate TILX prematurely

   TILX Summary at 13-JAN-1994 04:36:24
   Test minutes remaining: 9, expired: 1

Unit 50   Total IO Requests 868
  No errors detected
Unit 52   Total IO Requests 860
  No errors detected
Reuse Parameters (stop, continue, restart, change_unit) [stop] ?

TILX - Normal Termination

HSJ>
```

Refer to the *StorageWorks Array Controllers HS Family of Array Controllers Service Manual* for more details for running TILX.

7.3.5 VTDPY Utility

The VTDPY utility gathers and displays system state and performance information for the HS family of array controllers. The information displayed includes processor utilization, host port activity and status, device state, logical unit state, and cache and I/O performance.

The VTDPY utility requires a video terminal that supports ANSI control sequences, such as a VT220, VT320, or VT420 terminal. A graphics display that provides emulation of an ANSI compatible video terminal also can be used. For DSSI and CI-based (HSJ and HSD30) HS controllers, VTDPY can be run on terminals either directly connected to the HS array controller or on terminals connected through a host-based DUP connection. For SCSI-based (HSZ) HS array controllers, VTDPY can be run only on terminals connected the the HS array controller maintenance terminal port.

Note

VCS can be used only from a terminal attached to the terminal port on the front bezel of the HS array controller.

VTDPY is conceptually based on the HSC utility of the same name. Though the information displayed differs from the HSC utility due to system implementation differences, a user familiar with the HSC utility should be able to easily understand this display terminology.

The following sections show how to use the VTDPY utility.

7.3.5.1 How to Run VTDPY

Only one VTDPY session can be run on each controller at one time. Prior to running VTDPY, be sure the terminal is set in NOWRAP mode. Otherwise, the top line of the display scrolls off of the screen.

To initiate VTDPY from the maintenance terminal at the CLI> prompt, enter the following command:

```
CLI> RUN VTDPY
```

To initiate VTDPY from a virtual terminal, refer to Section 8.3.1.

7.3.5.2 Using the VTDPY Control Keys

Use the control key sequences listed in Table 7–1 to work the VTDPY display.

Table 7–1 VTDPY Control Keys

Control Key Sequence	Function
Ctrl/C	Prompts for commands.
Ctrl/G	Updates the screen (same as Ctrl/Z).
Ctrl/O	Pauses or resumes screen updates.
Ctrl/R	Refreshes current screen display (same as Ctrl/W).
Ctrl/W	Refreshes current screen display (same as Ctrl/R).
Ctrl/Y	Terminates VTDPY and resets screen characteristics.
Ctrl/Z	Updates the screen (same as Ctrl/G).

Note

While VTDPY and the maintenance terminal interface support passing all of the listed control characters, some host-based terminal interfaces restrict passing some of the characters. All of the listed characters have equivalent text string commands.

7.3.5.3 Using the VTDPY Command Line

VTDPY contains a command line interpreter that is invoked by entering Ctrl/C anytime after the program has begun execution. The command line interpreter is used to modify the characteristics of the VTDPY display. Table 7–2 lists the commands that duplicate the function of the control keys listed in Section 7.3.5.2.

Table 7–2 VTDPY Commands

Command String	Function
DISPLAY CACHE	Use 132 column unit caching statistics display.
DISPLAY DEFAULT	Use default 132 column system performance display.
DISPLAY DEVICE	Use 132 column device performance display.
DISPLAY STATUS	Use 80 column controller status display.

(continued on next page)

Table 7–2 (Cont.) VTDPY Commands

Command String	Function
EXIT	Terminates program (same as QUIT).
INTERVAL <seconds>	Changes update interval.
HELP	Displays help message text.
REFRESH	Refreshes the current display.
QUIT	Terminates program (same as EXIT).
UPDATE	Updates screen display.

The keywords in the command strings can be abbreviated to the minimum number of characters that are necessary to uniquely identify the keyword. Typing a question mark (?) after a keyword causes the parser to provide a list of keywords or values that can follow the supplied keyword. The command line interpreter is not case sensitive, so keywords can be entered in uppercase, lowercase, or mixed case letters.

Upon successful execution of a command other than HELP, the command line interpreter is exited and the display is resumed. Typing a carriage return without a command also exits the command line interpreter and resumes the display. If an error occurs in the command, the user prompts for command expansion help, or the HELP command is entered, the command line interpreter prompts for an additional command instead of returning to the display.

7.3.5.4 How to Interpret the VTDPY Display Fields

This section describes the major fields in the VTDPY displays. Examples of the VTDPY screens are shown followed by an explanation of each field of the screens.

Figure 7–1 VTDPY Default Display for CI Controllers

```
HSJ40  S/N: ZG33700938  SW: V25J HW:  00-00  03-FEB-1995  16:52:34                    Up:    0  0:24.53
                                90.8% Idle          2656 KB/S        0 Rq/S
 Pr  Name  Stk/Max Typ Sta  CPU% Node HSJA4  Port 25                  Unit  ASWC  KB/S  Rd% Wr% Cm% HT%  Unit  ASWC  KB/S  Rd% Wr% Cm% HT%
  0   NULL   0/  0      Rn  90.8 SysId 42001019F529                  D0410 a^ r     0    0   0   0   0  D0444 a^ r     0    0   0   0   0
  2  RECON  10/  1 FNC  Bl   0.0                                     D0411 a^ r     0    0   0   0   0  D0445 a^ r     0    0   0   0   0
  3    HPT  40/  4 FNC  Bl   1.6 Path A Pkts  Pkts/S                D0413 a^ r     0    0   0   0   0  D0450 a^ r     0    0   0   0   0
  9  VTDPY  10/  3 DUP  Rn   0.2 RCV     203     20                   D0414 a^ r     0    0   0   0   0  D0451 a^ r     0    0   0   0   0
 17 FMTHRD  10/  1 FNC  Bl   0.0 ACK     183     18                   D0415 a^ r     0    0   0   0   0  D0452 a^ r     0    0   0   0   0
 18  DS_HB  10/  1 FNC  Bl   0.0 NAK       0      0     Target  D0420 o^ r   448    0 100   0   0  D0453 a^ r     0    0   0   0   0
 19    DUP  10/  1 FNC  Bl   0.8 NOR      40      4  01234567 D0421 o^ r   435    0 100   0   0  D0454 a^ r     0    0   0   0   0
 20    SCS  10/  1 FNC  Bl   0.0                  P1DDFDDDhH D0422 o^ r   435    0 100   0   0  D0455 a^ r     0    0   0   0   0
 21   MSCP  20/  1 FNC  Bl   0.0 Path B Pkts  Pkts/S o2DDDDDDhH D0423 o^ r   448    0 100   0   0  D0460 a^ r     0    0   0   0   0
 23     VA  10/  1 FNC  Bl   0.0 RCV     187      18 r3DDDDDDhH D0424 o^ r   448    0 100   0   0  D0461 a^ r     0    0   0   0   0
 24   DS_1  40/  3 FNC  Rn   6.3 ACK     209      20 t4DDDDDDhH D0425 o^ r   441    0 100   0   0  D0462 a^ r     0    0   0   0   0
 25   DS_0  20/  2 FNC  Bl   0.0 NAK       0       0  5DDDDDDhH D0430 a^ r     0    0   0   0   0  D0463 a^ r     0    0   0   0   0
 26    HIS  10/  1 FNC  Bl   0.0 NOR      40       4  6DDDDDDhH D0431 a^ r     0    0   0   0   0  D0464 a^ r     0    0   0   0   0
 27 CLIMAIN 16/  2 FNC  Bl   0.0                                     D0432 a^ r     0    0   0   0   0  D0465 a^ r     0    0   0   0   0
 28   NVFOC  10/  1 FNC  Bl   0.0 Connections Path Status            D0433 a^ r     0    0   0   0   0
 29  REMOTE  10/  1 FNC  Bl   0.0  0123456789  0123456789           D0434 a^ r     0    0   0   0   0
 30     FOC  20/  2 FNC  Bl   0.0 OMMMM..... 0^^^^^.....           D0435 a^ r     0    0   0   0   0
 31   DUART  10/  1 FNC  Bl   0.0 1V.......C. 1^.......^.           D0440 a^ r     0    0   0   0   0
                                  2....V.VV.. 2....^.^^..           D0441 a^ r     0    0   0   0   0
                                        3.V       3.^               D0442 a^ r     0    0   0   0   0
                                                                    D0443 a^ r     0    0   0   0   0
```

Figure 7–2 VTDPY Default Display for DSSI Controllers

```
HSD30 S/N: CX40300006 SW: V25D HW: 00-00 03-FEB-1995 16:48:41
                                  19.7% Idle       0 KB/S       0 Rq/S                                  Up:    0  0:50.27
Pr   Name  Stk/Max Typ Sta  CPU% Node HSDD6   Port  6          Unit  ASWC  KB/S  Rd% Wr% Cm% HT% Unit  ASWC  KB/S  Rd% Wr% Cm% HT%
 0    NULL   0/  0      Rn  19.7 SysId 42001106E115            D2691 o^ r      0   0   0   0   0
 2   RECON  10/  1 FNC  Bl   0.0                               D2692 o^ r      0   0   0   0   0
 3     HPT  40/  8 FNC  Rn   1.2 DSSI   Pkts  Pkts/S           D2693 o^ r      0   0   0   0   0
 8   VTDPY  10/  3 DUP  Rn   0.2 RCV      342     31
17  FMTHRD  10/  1 FNC  Bl   0.0 ACK      343     31
18   DS_HB  10/  1 FNC  Bl   0.0 NAK        0      0    Target
19     DUP  10/  1 FNC  Bl   0.5 NOR        0      0   01234567
20     SCS  10/  1 FNC  Bl   0.0                     P1 DDDDD H
21    MSCP  20/  1 FNC  Bl   0.0                     o2 DDDDD H
23      VA  10/  1 FNC  Bl   0.0                     r3 DDDDD H
24    DS_1  40/ 11 FNC  Rn  77.2                     t
25    DS_0  20/  1 FNC  Bl   1.0
26     HIS  10/  1 FNC  Bl   0.0
27 CLIMAIN  16/  2 FNC  Bl   0.0
28   NVFOC  10/  1 FNC  Bl   0.0 Connections Path Status
29  REMOTE  10/  1 FNC  Bl   0.0  0123456789  0123456789
30     FOC  20/  2 FNC  Bl   0.0 0.......M   0.......^
31   DUART  10/  1 FNC  Bl   0.0 1           1
                                 2           2
                                 3           3
```

Figure 7–3 VTDPY Default Display for SCSI Controllers

```
HSZ40 S/N: CX12345678 SW: V25Z HW: 00-00                                                
```

Figure 7–4 VTDPY Device Performance Display

```
HSJ40 S/N: ZG33700938 SW: V25J HW: 00-00 03-FEB-1995 16:53:06
                                  0.0% Idle     2389 KB/S      348 Rq/S                                  Up:    0  0:25.26
   Target                          PTL ASWF Rq/S RdKB/S WrKB/S Que Tg CR BR TR  PTL ASWF Rq/S RdKB/S WrKB/S Que Tg CR BR TR
  01234567                         D100 A^     0      0      0   0  0  0  0  0 D430 A^     0      0      0   0  0  0  0  0
P1DDFDDDhH                         D200 A^    57      0    396  16 11  0  0  0 D530 A^     0      0      0   0  0  0  0  0
o2DDDDDDhH                         D300 A^     0      0      0   0  0  0  0  0 D630 A^     0      0      0   0  0  0  0  0
r3DDDDDDhH                         D400 A^     0      0      0   0  0  0  0  0 D140 A^     0      0      0   0  0  0  0  0
t4DDDDDDhH                         D500 A^     0      0      0   0  0  0  0  0 D240 A^    60      0    415  16 11  0  0  0
 5DDDDDDhH                         D600 A^     0      0      0   0  0  0  0  0 D340 A^     0      0      0   0  0  0  0  0
 6DDDDDDhH                         D110 A^     0      0      0   0  0  0  0  0 D440 A^     0      0      0   0  0  0  0  0
                                   D210 A^    50      0    340  17 11  0  0  0 D540 A^     0      0      0   0  0  0  0  0
                                   D310 A^     0      0      0   0  0  0  0  0 D640 A^     0      0      0   0  0  0  0  0
                                   D410 A^     0      0      0   0  0  0  0  0 D150 A^     0      0      0   0  0  0  0  0
                                   D510 A^     0      0      0   0  0  0  0  0 D250 A^    45      0    292  16 11  0  0  0
                                   D610 A^     0      0      0   0  0  0  0  0 D350 A^     0      0      0   0  0  0  0  0
Port Rq/S RdKB/S WrKB/S  CR  BR  TR F120  v F   0      0      0   0  0  0  0  0 D450 A^     0      0      0   0  0  0  0  0
 1     0      0      0   0   0   0 D220 A^    51      0    333  16 11  0  0  0 D550 A^     0      0      0   0  0  0  0  0
 2   348      1   2387   0   0   0 D320 A^     0      0      0   0  0  0  0  0 D650 A^     0      0      0   0  0  0  0  0
 3     0      0      0   0   0   0 D420 A^     0      0      0   0  0  0  0  0
 4     0      0      0   0   0   0 D520 A^     0      0      0   0  0  0  0  0
 5     0      0      0   0   0   0 D620 A^     0      0      0   0  0  0  0  0
 6     0      0      0   0   0   0 D130 A^     0      0      0   0  0  0  0  0
                                   D230 A^    83      0    608  16 11  0  0  0
                                   D330 A^     0      0      0   0  0  0  0  0
```

Figure 7–5 VTDPY Unit Cache Performance Display

```
HSJ40 S/N: ZG33700938 SW: V25J HW: 00-00 03-FEB-1995 16:53:26
                                  80.1% Idle     2719 KB/S       23 Rq/S                                  Up:    0  0:25.45
Unit  ASWC  KB/S  Rd% Wr% Cm% HT% PH% MS% Purge BlChd BlHit Unit  ASWC  KB/S  Rd% Wr% Cm% HT% PH% MS% Purge BlChd BlHit
D0410 a^ r     0   0   0   0   0   0   0     0     0     0 D0444 a^ r     0   0   0   0   0   0   0     0     0     0
D0411 a^ r     0   0   0   0   0   0   0     0     0     0 D0445 a^ r     0   0   0   0   0   0   0     0     0     0
D0413 a^ r     0   0   0   0   0   0   0     0     0     0 D0450 a^ r     0   0   0   0   0   0   0     0     0     0
D0414 a^ r     0   0   0   0   0   0   0     0     0     0 D0451 a^ r     0   0   0   0   0   0   0     0     0     0
D0415 a^ r     0   0   0   0   0   0   0     0     0     0 D0452 a^ r     0   0   0   0   0   0   0     0     0     0
D0420 o^ r   483   0 100   0   0   0 100     0   132     0 D0453 a^ r     0   0   0   0   0   0   0     0     0     0
D0421 o^ r   483   0 100   0   0   0 100     0   132     0 D0454 a^ r     0   0   0   0   0   0   0     0     0     0
D0422 o^ r   476   0 100   0   0   0 100     0   132     0 D0455 a^ r     0   0   0   0   0   0   0     0     0     0
D0423 o^ r   315   0  99   0   1   0  99     0   159     1 D0460 a^ r     0   0   0   0   0   0   0     0     0     0
D0424 o^ r   483   0 100   0   0   0 100     0   132     0 D0461 a^ r     0   0   0   0   0   0   0     0     0     0
D0425 o^ r   476   0 100   0   0   0 100     0   132     0 D0462 a^ r     0   0   0   0   0   0   0     0     0     0
D0430 a^ r     0   0   0   0   0   0   0     0     0     0 D0463 a^ r     0   0   0   0   0   0   0     0     0     0
D0431 a^ r     0   0   0   0   0   0   0     0     0     0 D0464 a^ r     0   0   0   0   0   0   0     0     0     0
D0432 a^ r     0   0   0   0   0   0   0     0     0     0 D0465 a^ r     0   0   0   0   0   0   0     0     0     0
D0433 a^ r     0   0   0   0   0   0   0     0     0     0
D0434 a^ r     0   0   0   0   0   0   0     0     0     0
D0435 a^ r     0   0   0   0   0   0   0     0     0     0
D0440 a^ r     0   0   0   0   0   0   0     0     0     0
D0441 a^ r     0   0   0   0   0   0   0     0     0     0
D0442 a^ r     0   0   0   0   0   0   0     0     0     0
D0443 a^ r     0   0   0   0   0   0   0     0     0     0
```

Figure 7–6 VTDPY Brief CI Status Display

```
03-FEB-1995 16:52:50                                                
```

Figure 7–7 VTDPY Brief DSSI Status Display

```
03-FEB-1995 16:49:04                                                    
   Up:    0  0:50.50                                                    
                                                                        
                                                                        
                                                                        
```

Figure 7–8 VTDPY Brief SCSI Status Display

```
                60.9% Idle      861 KB/S      293 Rq/S         Up:    0  1:33.50
Pr   Name  Stk/Max Typ Sta  CPU%    Target   Unit  ASWC  KB/S  Unit  ASWC  KB/S
 0    NULL   0/  0      Rn  60.9   01234567  D0000 o^ b     98
 2   RECON  10/  1 FNC  Bl   0.0 P1D D D  H  D0001 o^ b    100
 3    SHIS  40/  7 FNC  Rn  32.7 o2 D D DDH  D0002 o^ b    115
 8   VTDPY  10/  3 DUP  Rn   0.1 r3D D D  H  D0003 o^ b     86
18  SCSIVT  10/  1 FNC  Bl   0.0 t4 D D  DH  D0004 o^ b     96
19   DS_HB  10/  1 FNC  Bl   0.0  5D D D  H  D0005 o^ b    141
24      VA  10/  1 FNC  Bl   0.0  6 D D DDH  D0006 o^ b    125
25    DS_1  40/  6 FNC  Bl   5.8             D0007 o^ b     97
26    DS_0  20/  1 FNC  Bl   0.1 Xfer Rate
27 CLIMAIN  16/  7 FNC  Bl   0.0  Id   Mhz
28   NVFOC  10/  1 FNC  Bl   0.0  0 = Asynch
29  REMOTE  10/  1 FNC  Bl   0.0  1 = Asynch
30     FOC  20/  2 FNC  Bl   0.0  2 = This
31   DUART  10/  1 FNC  Bl   0.0  3 = Asynch
                                  4 = Asynch
                                  5 = Asynch
                                  6 =  3.57
                                  7 = Asynch
```

Display Header

```
    HSJ40 ❶ S/N: CX00000002 ❷ SW: V25J ❸ HW:  A-02 ❹
VTDPY Monitor ❺
```

Description

This subdisplay provides title information for the display. For 132 column displays, this subdisplay is displayed across one line.

❶ Controller model

❷ Controller serial number

❸ Controller firmware version

❹ Controller hardware version

❺ Copyright notice

Date and Time

```
29-JAN-1995 13:46:34 ❶
  Up:    1  3:45.19 ❷
```

Description

This subdisplay provides time information for the display.

❶ System date and time. This information is not displayed for SCSI based HS array controllers.

❷ Time in days, hours, minutes, and seconds since the last controller boot.

Controller Performance Summary

```
47.2% Idle ❶ 1225 KB/S ❷106 Rq/S ❸
```

Description

This subdisplay provides total system performance information.

❶ Policy processor idle rate.

❷ Cumulative data transfer rate in kilobytes per second. When logical units are being displayed, this is the transfer rate between the host and the controller. When physical devices are being displayed, this is the transfer rate between the controller and the devices.

❸ Cumulative unit or device request rate per second. When logical units are being displayed, this is the request rate between the host and the controller. When physical devices are being displayed, this is the request rate between the controller and the devices.

Controller Threads Display

```
Pr❶ Name❷  Stk/Max❸ Typ❹ Sta❺ CPU%❻
 0     NULL    0/  0         Rn   47.2
 3      HPT   40/  7   FNC   Rn   40.3
 8    VTDPY   10/  3   DUP   Rn    0.1
18   FMTHRD   10/  2   FNC   Bl    0.0
19    DS_HB   10/  2   FNC   Bl    0.0
20      DUP   10/  2   FNC   Bl    1.3
21      SCS   10/  2   FNC   Bl    0.0
22     MSCP   20/  6   FNC   Bl    0.0
24       VA   10/  3   FNC   Bl    1.2
25     DS_1   40/  6   FNC   Rn    8.9
26     DS_0   20/  4   FNC   Bl    0.0
27      HIS   10/  2   FNC   Bl    0.0
28  CLIMAIN   16/  6   FNC   Bl    0.0
30      FOC   16/  4   FNC   Bl    0.0
31    DUART   10/  2   FNC   Bl    0.0
```

Description

This display shows the status and characteristics of the active threads in the controller. Threads that are not active, such as DUP Local Program threads are not displayed until they become active. If the number of active threads exceeds the available space, not all of them will be displayed.

❶ The **Pr** column lists the thread priority. The higher the number, the higher the priority.

❷ The **Name** column contains the thread name. For DUP Local Program threads, this is the name used to invoke the program.

❸ The **Stk** column lists the allocated stack size in 512 byte pages. The **Max** column lists the number of stack pages actually used.

❹ The **Typ** column lists the thread type. The following thread types may appear:

- **FNC**—Functional thread. Those threads that are started when the controller boots and never exit.
- **DUP**—DUP local program threads. These threads are only active when run either from a DUP connection or through the command line interpreter's **RUN** command.
- **NULL**—The NULL thread does not have a thread type because, it is a special type of thread that only executes when no other thread is executable.

❺ The **Sta** column lists the current thread state. The following thread states may appear:

- **Bl**—The thread is blocked waiting for timer expiration, resources, or a synchronization event.
- **Io**—A DUP local program is blocked waiting for terminal I/O completion.
- **Rn**—The thread is currently executable.

❻ The **CPU%** column lists the percentage of execution time credited to each thread since the last screen update. The values may not add up to exactly 100 percent due to both rounding errors and the fact that there may not be enough room to display all of the threads. An unexpected amount of time may be credited to some threads because the controller's firmware architecture allows code from one thread to execute in the context of another thread without a context switch.

Table 7–3 describes the processes that may appear in the active thread display.

Note

It is possible that different versions of the controller firmware will have different threads or different names for the threads.

Table 7–3 Thread Description

Thread Name	Description
CLI	A local program that provides an interface to the controller's command line interpreter thread.
CLIMAIN	The command line interpreter (CLI) thread.
CONFIG	A local program that locates and adds devices to an HS array controller configuration.
DILX	A local program that exercises disk devices.
DIRECT	A local program that returns a listing of available local programs.
DS_0	A disk error recovery management thread.
DS_1	The thread that handles successful completion of physical device requests.
DS_HB	The thread that manages the device and controller error indicator lights and port reset buttons.
DUART	The console terminal interface thread.
DUP	The DUP protocol server thread.
FMTHREAD	The thread that performs error log formatting and fault reporting for the controller.
FOC	The thread that manages communication between the controllers in a dual controller configuration.
HIS	The SCS protocol interface thread for CI and DSSI controllers.
HPT	The thread that handles interaction with the host hardware logic and PPD protocol for CI and DSSI controllers.
MDATA	Tje thread that processes metadata for nontransportable disks.
MSCP	The MSCP and TMSCP protocol server thread.
NULL	The process that is scheduled when no other process can be run.
NVFOC	The thread that initiates state change requests for the other controller in a dual controller configuration.
REMOTE	The thread that manages state changes initiated by the other controller in a dual controller configuration.

(continued on next page)

Table 7–3 (Cont.) Thread Description

Thread Name	Description
RMGR	The thread that manages the data buffer pool.
RECON	The thread that rebuilds the parity blocks on RAID level 5 storagesets when needed and manages mirrorset copy operations when necessary.
SCS	The SCS directory thread.
SCSIVT	A thread that provides a virtual terminal connection to the CLI over the host SCSI bus.
SHIS	The host SCSI protocol interface thread for SCSI controllers.
TILX	A local program that exercises tape devices.
VA	The thread that provides host protocol independent logical unit services.
VTDPY	A local program thread that provides a dynamic display of controller configuration and performance information.

CI/DSSI Host Port Characteristics

```
Node HSJ501 ❶ Port 13 ❷
SysId 4200100D0720 ❸
```

Description

This subdisplay shows the current host port identification information. This subdisplay is available only for CI or DSSI based controllers.

❶ SCS node name

❷ Port number

❸ SCS system ID

SCSI Host Port Characteristics

```
Xfer Rate
T❶W❷I❸Mhz❹
1 W 7 10.00
2 W Async❺
```

Description

This subdisplay shows the current host port SCSI target identification, any initiator which has negotiated synchronous transfers, and the negotiated transfer method currently in use between the controller and the initiators. This subdisplay is available only for SCSI based HS array controllers.

❶ SCSI host port target ID.

❷ Transfer width. **W** indicates 16 bit or wide transfers are being used. A space indicates 8 bit transfers are being used.

❸ The initiator with which synchronous communication has been negotiated.

❹ A numeric value indicates the synchronous data rate which has been negotiated with the initiator at the specified SCSI ID. The value is listed in megahertz (Mhz). In this example, the negotiated synchronous transfer rate is approximately 3.57 Mhz. To convert this number to the nanosecond period, invert and multiply by 1000. The period for this is approximately 280 nanoseconds.

❺ **Async** indicates communication between this target and all initiators is being done in asynchronous mode. This is the default communication mode and is used unless the initiator successfully negotiates for synchronous communications. If there is no communication with a given target ID, the communication mode is listed as asynchronous.

CI Performance Display

```
Path A Pkts  Pkts/S
RCV     5710    519 ❶
ACK    11805   1073 ❷
NAK     2073    188 ❸
NOR     1072     97 ❹

Path B Pkts  Pkts/S
RCV     5869    533
ACK    11318   1028
NAK     2164    196
NOR      445     40
```

Description

This display indicates the number of packets sent and received over each CI path and the packet rate. This display is available only on CI based controllers.

❶ Packets received from a remote node

❷ Packets sent to a remote node that were ACKed

❸ Packets sent to a remote node that were NAKed

❹ Packets sent to a remote node for which no response was received

DSSI Performance Display

```
DSSI   Pkts  Pkts/S
RCV     5710     519 ❶
ACK    11805    1073 ❷
NAK     2073     188 ❸
NOR     1072      97 ❹
```

Description

This display indicates the number of packets sent and received through the DSSI port and the packet rate. This display is available only on DSSI based controllers.

❶ Packets received from a remote node

❷ Packets sent to a remote node that were ACKed

❸ Packets sent to a remote node that were NAKed

❹ Packets sent to a remote node for which no response was received

CI/DSSI Connection Status

```
Connections
 0123456789 ❶
0........MM ❷
1..C.MV....
2..........
3..
```

Description

This display shows the current status of any connections to a remote CI or DSSI node. This display is available only on CI and DSSI based controllers.

❶ Each position in the data field represents one of the possible nodes to which the controller can communicate. To locate the connection status for a given node, use the column on the left to determine the high order digit of the node number, and use the second row to determine the low order digit of the node number. For CI controllers, the number of nodes displayed is determined by the controllers MAX NODE parameter. The maximum supported value for this parameter is 32. For DSSI controllers, the number of nodes is fixed at 8.

❷ Each location in the grid contains a character to indicate the connection status:

- **C** indicates one connection to that node. In this example, node 12 shows one connection. This usually happens if a host has multiple adaptors and it is using more than one adaptor for load balancing.
- **M** indicates multiple connections to that node. Because each host system can make a separate connection to each of the disk, tape, and DUP servers, this field frequently shows multiple connections to a host system. In this example, nodes 8, 9, and 14 show multiple connections.
- **V** indicates that only a virtual circuit is open and no connection is present. This happens prior to establishing a connection. It also happens when there is another controller on the same network and when there are systems with multiple adaptors connected to the same network. Node 15 demonstrates this principle.
- If a period (.) is in a position corresponding to a node, that node does not have any virtual circuits or connections to this controller.
- A space indicates the address is beyond the visible node range for this controller.

CI/DSSI Host Path Status

```
Path Status
 0123456789 ❶
0........^^ ❷
1..A.B^....
2.......X..
3..
```

Description

This display indicates the path status to any system for which a virtual circuit exists. This display is available only on CI and DSSI based controllers.

❶ Each position in the data field represents one of the possible nodes to which the controller can communicate. To locate the path status for a given node, use the column on the left to determine the high order digit of the node number, and use the second row to determine the low order digit of the node number. For CI controllers, the number of nodes displayed is determined by the controllers MAX NODE parameter. The maximum supported value for this parameter is 32. For DSSI controllers, the number of nodes is fixed at 8.

❷ Each location in the grid contains a character to indicate the path status:

- **A** indicates only CI path A is functioning properly. In this example, node 12 demonstrates this. This value is not displayed for DSSI based controllers.
- **B** indicates only CI path B is functioning properly. In this example, node 14 demonstrates this. This value is not displayed for DSSI based controllers.
- **X** indicates the CI cables are crossed. In this example, node 27 demonstrates this. This value is not displayed for DSSI based controllers.
- A circumflex (**^**) indicates the single DSSI path or both CI paths are functioning properly. In this example, nodes 8, 9, and 15 demonstrate this.
- If a period (.) is in a position corresponding to a node, that node does not have any virtual circuits or connections to this controller so either the path status cannot be determined, or neither path is functioning properly.
- A space indicates the address is beyond the visible node range for this controller.

Device SCSI Status

```
  Target
  01234567 ❶
P1 DDDDFhH ❷
o2TTT T hH
r3DDD   hH
t4DDDDDDhH
 5DDDD  hH
 6      hH❸
```

Description

This display shows what devices the controller has been able to identify on the device busses.

Note

The controller does not look for devices that are not configured into the nonvolatile memory using the CLI ADD command.

❶ The column headings indicate the SCSI target numbers for the devices. SCSI targets are in the range 0 through 7. Target 7 is always used by a controller. In a dual controller configuration, target 6 is used by the second controller.

❷ The device grid contains a letter signifying the device type in each port/target location where a device has been found:

- **C** indicates a CD–ROM device.
- **D** indicates a disk device.
- **F** indicates a device type not listed above.
- **H** indicates bus position of this controller.
- **h** indicates bus position of the other controller.
- **L** indicates a media loader.
- **T** indicates a tape device.
- A period (.) indicates the device type is unknown.
- A space indicates there is no device configured at this location.

❸ This subdisplay contains a row for each SCSI device port supported by the controller. The subdisplay for a controller that has six SCSI device ports is shown.

Unit Status (abbreviated)

```
Unit❶ ASWC❷ KB/S❸ Rd%❹ Wr%❺ Cm%❻ HT%❼
D0110  a^ r      0     0     0     0     0
D0120  a^ r      0     0     0     0     0
D0130  o^ r    236   100     0     0   100
T0220  av        0     0     0     0     0
T0230  o^      123     0   100     0     0
```

Description

This subdisplay shows the status of the logical units that are known to the controller firmware. It also indicates performance information for the units. Up to 42 units can be displayed in this subdisplay.

❶ The **Unit** column contains a letter indicating the type of unit followed by the unit number of the logical unit. The list is sorted by unit number. There may be duplication of unit numbers between devices of different types. If this happens, the order of these devices is arbitrary. The following device type letters may appear:

- **D** indicates a disk device.
- **T** indicates a tape device.
- **L** indicates a media loader.
- **C** indicates a CD–ROM device.
- **F** indicates a device type not listed above.
- **U** indicates the device type is unknown.

❷ The **ASWC** columns indicate respectively the availability, spindle state, write protect state, and cache state of the logical unit.

The availability state is indicated using the following letters:

- **a**—Available. Available to be mounted by a host system.
- **d**—Offline, Disabled by Customer Service. The unit has been disabled for service.
- **e**—Online, Exclusive Access. Unit has been mounted for exclusive access by a user.
- **f**—Offline, Media Format Error. The unit cannot be brought available due to a media format inconsistency.
- **i**—Offline, Inoperative. The unit is inoperative and cannot be brought available by the controller.
- **m**—Offline, Maintenance. The unit has been placed in maintenance mode for diagnostic or other purposes.
- **o**—Online. Mounted by at least one of the host systems.
- **r**—Offline, Rundown. The CLI SET NORUN command has been issued for this unit.
- **v**—Offline, No Volume Mounted. The device does not contain media.
- **x**—Online to other controller. Not available for use by this controller.

- A space in this column indicates the availability is unknown.

The spindle state is indicated using the following characters:

- **^**—For disks, this symbol indicates the device is at speed. For tapes, it indicates the tape is loaded.
- **>**—For disks, this symbol indicates the device is spinning up. For tapes, it indicates the tape is loading.
- **<**—For disks, this symbol indicates the device is spinning down. For tapes, it indicates the tape is unloading.
- **v**—For disks, this symbol indicates the device is stopped. For tapes, it indicates the tape is unloaded.
- For other types of devices, this column is left blank.

For disks and tapes, a **w** in the write protect column indicates the unit is write protected. This column is left blank for other device types.

The data caching state is indicated using the following letters:

- **b**—Both read caching and write-back caching are enabled.
- **r**—Read caching is enabled.
- **w**—Write-back caching is enabled.
- A space in this column indicates caching is disabled.

❸ **KB/S**—This column indicates the average amount of kilobytes of data transferred to and from the unit in the previous screen update interval. This data is available only for disk and tape units.

❹ **Rd%**—This column indicates what percentage of data transferred between the host and the unit were read from the unit. This data is contained only in the **DEFAULT** display for disk and tape device types.

❺ **Wr%**—This column indicates what percentage of data transferred between the host and the unit were written to the unit. This data is contained only in the **DEFAULT** display for disk and tape device types.

❻ **Cm%**—This column indicates what percentage of data transferred between the host and the unit were compared. A compare operation can be accompanied by either a read or a write operation, so this column is not cumulative with read percentage and write percentage columns. This data is contained only in the **DEFAULT** display for disk and tape device types.

❼ **HT%**—This column indicates the cache hit percentage for data transferred between the host and the unit.

Unit Status (full)

Unit❶	ASWC❷	KB/S❸	Rd%❹	Wr%❺	Cm%❻	HT%❼	PH%❽	MS%❾	Purge❿	BlChd⓫	BlHit⓬
D0003	o^ r	382	0	100	0	0	0	0	0	6880	0
D0250	o^ r	382	100	0	0	0	0	100	0	6880	0
D0251	o^ r	284	100	0	0	0	0	100	0	5120	0
D0262	a^ r	0	0	0	0	0	0	0	0	0	0
D0280	o^ r	497	44	55	0	0	0	100	0	9011	0
D0351	a^ r	0	0	0	0	0	0	0	0	0	0
D0911	a^ r	0	0	0	0	0	0	0	0	0	0
D1000	a^ r	0	0	0	0	0	0	0	0	0	0

Description

This subdisplay shows the status of the logical units that are known to the controller firmware. It also shows I/O performance information and caching statistics for the units. Up to 42 units can be displayed in this subdisplay.

❶ The **Unit** column contains a letter indicating the type of unit followed by the unit number of the logical unit. The list is sorted by unit number. There may be duplication of unit numbers between devices of different types. If this happens, the order of these devices is arbitrary. The following device type letters may appear:

- **D** indicates a disk device.
- **T** indicates a tape device.
- **L** indicates a media loader.
- **C** indicates a CD–ROM device.
- **F** indicates a device type not listed above.
- **U** indicates the device type is unknown.

❷ The **ASWC** columns indicate the availability, spindle state, write protect state, and cache state respectively of the logical unit.

The availability state is indicated using the following letters:

- **a**—Available. Available to be mounted by a host system.
- **d**—Offline, Disabled by Customer Service. The unit has been disabled for service.
- **e**—Online, Exclusive Access. Unit has been mounted for exclusive access by a user.
- **f**—Offline, Media Format Error. The unit cannot be brought available due to a media format inconsistency.
- **i**—Offline, Inoperative. The unit is inoperative and cannot be brought available by the controller.
- **m**—Offline, Maintenance. The unit has been placed in maintenance mode for diagnostic or other purposes.
- **o**—Online. Mounted by at least one of the host systems.
- **r**—Offline, Rundown. The CLI SET NORUN command has been issued for this unit.

- **v**—Offline, No Volume Mounted. The device does not contain media.
- **x**—Online to other controller. Not available for use by this controller.
- A space in this column indicates the availability is unknown.

The spindle state is indicated using the following characters:

- **^**—For disks, this symbol indicates the device is at speed. For tapes, it indicates the tape is loaded.
- **>**—For disks, this symbol indicates the device is spinning up. For tapes, it indicates the tape is loading.
- **<**—For disks, this symbol indicates the device is spinning down. For tapes, it indicates the tape is unloading.
- **v**—For disks, this symbol indicates the device is stopped. For tapes, it indicates the tape is unloaded.
- For other types of devices, this column is left blank.

For disks and tapes, a **w** in the write protect column indicates the unit is write protected. This column is left blank for other device types.

The data caching state is indicated using the following letters:

- **b**—Both read caching and write-back caching are enabled.
- **r**—Read caching is enabled.
- **w**—Write-back caching is enabled.
- A space in this column indicates caching is disabled.

❸ **KB/S**—This column indicates the average amount of kilobytes of data transferred to and from the unit in the previous screen update interval. This data is only available for disk and tape units.

❹ **Rd%**—This column indicates what percentage of data transferred between the host and the unit were read from the unit. This data is only contained in the **DEFAULT** display for disk and tape device types.

❺ **Wr%**—This column indicates what percentage of data transferred between the host and the unit were written to the unit. This data is only contained in the **DEFAULT** display for disk and tape device types.

❻ **Cm%**—This column indicates what percentage of data transferred between the host and the unit were compared. A compare operation may be accompanied by either a read or a write operation, so this column is not cumulative with read percentage and write percentage columns. This data is only contained in the **DEFAULT** display for disk and tape device types.

❼ **HT%**—This column indicates the cache hit percentage for data transferred between the host and the unit.

❽ **PH%**—This column indicates the partial cache hit percentage for data transferred between the host and the unit.

❾ **MS%**—This column indicates the cache miss percentage for data transferred between the host and the unit.

❿ **Purge**—This column shows the number of blocks purged from the write back cache in the last update interval.

⓫ **BlChd**—This column shows the number of blocks added to the cache in the last update interval.

⓬ **BlHit**—This column shows the number of cached data blocks ‘‘hit’’ in the last update interval.

Device Status

PTL❶	ASWF❷	Rq/S❸	RdKB/S❹	WrKB/S❺	Que❻	Tg❼	CR❽	BR❾	TR❿
D100	A^	0	0	0	11	0	0	0	0
D120	A^	0	0	0	0	0	0	0	0
D140	A^	0	0	0	0	0	0	0	0
D210	A^	11	93	0	1	1	0	0	0
D230	A^	0	0	0	0	0	0	0	0
D300	A^	11	93	0	2	1	0	0	0
D310	A^	0	0	0	0	0	0	0	0
D320	A^	36	247	0	12	10	0	0	0
D400	A^	11	93	0	2	1	0	0	0
D410	A^	0	0	0	0	0	0	0	0
D420	A^	36	247	0	10	8	0	0	0
D430	A^	0	0	0	0	0	0	0	0
D440	A^	0	0	0	0	0	0	0	0
D450	A^	0	0	0	0	0	0	0	0
D500	A^	11	93	0	1	1	0	0	0
D510	A^	0	0	0	0	0	0	0	0
D520	A^	0	0	0	0	0	0	0	0
D530	A^	47	0	375	6	5	0	0	0

Description

This subdisplay shows the status of the physical storage devices that are known to the controller firmware. It also shows I/O performance information and bus statistics for these devices. Up to 42 devices can be displayed in this subdisplay.

❶ The **PTL** column contains a letter indicating the type of device followed by the SCSI Port, Target, and LUN of the device. The list is sorted by port, target, and LUN. The following device type letters may appear:

- **D** indicates a disk device.
- **T** indicates a tape device.
- **L** indicates a media loader.
- **C** indicates a CD–ROM device.
- **F** indicates a device type not listed above.
- **U** indicates the device type is unknown.

❷ The **ASWF** columns indicate the allocation, spindle state, write protect state, and fault state respectively of the device.

The availability state is indicated using the following letters:

- **A**—Allocated to this controller.
- **a**—Allocated to the other controller.
- **U**—Unallocated, but owned by this controller.
- **u**—Unallocated, but owned by the other controller.
- A space in this column indicates the allocation is unknown.

The spindle state is indicated using the following characters:

- **^**—For disks, this symbol indicates the device is at speed. For tapes, it indicates the tape is loaded.
- **>**—For disks, this symbol indicates the device is spinning up. For tapes, it indicates the tape is loading.
- **<**—For disks, this symbol indicates the device is spinning down. For tapes, it indicates the tape is unloading.
- **v**—For disks, this symbol indicates the device is stopped. For tapes, it indicates the tape is unloaded.
- For other types of devices, this column is left blank.

For disks and tapes, a **W** in the write protect column indicates the device is hardware write protected. This column is left blank for other device types.

A **F** in the fault column indicates an unrecoverable device fault. If this field is set, the device fault indicator also is illuminated.

❸ **Rq/S**—This column shows the average I/O request rate for the device during the last update interval. These requests are up to 8 kilobytes long and are either generated by host requests or cache flush activity.

❹ **RdKB/S**—This column shows the average data transfer rate from the device in kilobytes during the previous screen update interval.

❺ **WrKB/S**—This column shows the average data transfer rate to the device in kilobytes during the previous screen update interval.

❻ **Que**—This column shows the maximum number of transfer requests waiting to be transferred to the device during the last screen update interval.

❼ **Tg**—This column shows the maximum number of transfer requests queued to the device during the last screen update interval. If a device does not support tagged queuing, the maximum value is 1.

❽ **CR**—This column indicates the number of SCSI command resets that occurred since VTDPY was started.

❾ **BR**—This column indicates the number of SCSI bus resets that occurred since VTDPY was started.

❿ **TR**—This column indicates the number of SCSI target resets that occurred since VTDPY was started.

Device SCSI Port Performance

```
Port❶ Rq/S❷ RdKB/S❸ WrKB/S❹ CR❺ BR❻ TR❼
 1        0        0        0    0    0    0
 2       11       93        0    0    0    0
 3       48      341        0    0    0    0
 4       48      340        0    0    0    0
 5       58       93      375    0    0    0
 6        0        0        0    0    0    0
```

Description

This subdisplay shows the accumulated I/O performance values and bus statistics for the SCSI device ports. The subdisplay for a controller that has six SCSI device ports in shown.

❶ The **Port** column indicates the number of the SCSI device port.

❷ **Rq/S**—This column shows the average I/O request rate for the port during the last update interval. These requests are up to 8 kilobytes long and are either generated by host requests or cache flush activity.

❸ **RdKB/S**—This column shows the average data transfer rate from all devices on the SCSI bus in kilobytes during the previous screen update interval.

❹ **WrKB/S**—This column shows the average data transfer rate to all devices on the SCSI bus in kilobytes during the previous screen update interval.

❺ **CR**—This column indicates the number of SCSI command resets that occurred since VTDPY was started.

❻ **BR**—This column indicates the number of SCSI bus resets that occurred since VTDPY was started.

❼ **TR**—This column indicates the number of SCSI target resets that occurred since VTDPY was started.

Help Example

```
VTDPY> HELP

Available VTDPY commands:

^C - Prompt for commands
^G or ^Z - Update screen
^O - Pause/Resume screen updates
^Y - Terminate program
^R or ^W - Refresh screen
DISPLAY CACHE - Use 132 column unit caching statistics display
DISPLAY DEFAULT - Use default 132 column system performance display
DISPLAY DEVICE - Use 132 column device performance display
DISPLAY STATUS - Use 80 column controller status display
EXIT - Terminate program (same as QUIT)
INTERVAL <seconds> - Change update interval
HELP - Display this help message
REFRESH - Refresh the current display
QUIT - Terminate program (same as EXIT)
UPDATE - Update screen display

VTDPY>
```

Description

This is the sample output from executing the HELP command.

7.3.6 Firmware Licensing System (FLS)

The firmware licensing system (FLS) enables or disables the licensed value-added software features (RAID 3/5, write-back cache, and mirroring) of the HS array controller. You may use the FLS utility to perform the following tasks:

- Enable or disable optional functions for your controller
- Try an optional feature before purchasing the license to use it
- Change your license key for an option

Start FLS from the CLI prompt. After starting, the FLS display shows the current status of the value-added options for your controller and contains menu choices for each function of the utility.

7.3.6.1 Enabling Options

You can turn on any option at any time with FLS, but if you enable an option for which you are not licensed, an error message appears on your CLI console and an error is logged in the host error log. These host error indications are repeated at least once each hour while the unlicensed option remains enabled.

7.3.6.2 Disabling Options

You cannot disable an option if that option is currently in use. The following table lists the conditions under which you can disable an FLS option.

Option	Conditions Required to Disable
RAID	No RAIDset configured
WBCA	Write-back caching not in use on any unit
MIRR	No mirrorset configured

7.3.6.3 License Key

When you first run FLS, the license key is cleared. If you purchase a license for a firmware option, you will receive a customer license key. This key contains two parts: a customer identification string from 6 to 32 characters long, and an 8-character **cyclic redundancy check** (CRC) string. You must enter the customer identification string with the CRC string appended to it when you use FLS.

7.3.6.4 Using the Menu

You can perform these operations from the FLS menu:

Select	Action	Submenu Choices	Result
1	Enable an option	List each option and its status	Selection enabled
2	Disable an option	List each option and its status	Selection disabled
3	Enter a license key	Prompt for new license key	Entered key checked for validity
4	Clear a license key	Prompt for license key to clear	Entered key becomes invalid

The following example shows the FLS main menu:

```
CLI> RUN FLS

------------------------------------------------------------------------------
      Firmware Licensing System (FLS) on node BERT
Option❶   State❷       License❸       Key❹
------------------------------------------------------------------------------
 RAID      DISABLED      INVALID        *none*
 WBCA      ENABLED ******INVALID!****** *none*
 MIRR      ENABLED        VALID         ACME_WIDGET_CORP........

               RAID = RAID Option ❺
               WBCA = Writeback Cache Option
               MIRR = Disk Mirroring Option
------------------------------------------------------------------------------
    1. Enable a firmware option
    2. Disable a firmware option
    3. Enter a license key for a firmware option
    4. Clear a license key for a firmware option
    0. Exit FLS
Enter selection (0:4) [0] ?
```

❶ **Option**–The RAID, write-back cache (WBCA), and mirroring (MIRR) options are available.

❷ **State**–Both MIRR and WBCA are enabled. You may use any option that is enabled, regardless of whether you have a valid license key.

❸ **License**–WBCA is running without a valid license. This status will show when you are running an option on a trial basis. The license becomes valid when you enter a license key that FLS verifies as valid. You receive this key when you purchase a software option.

❹ **Key+CRC**–The license key is ACME_WIDGET_CORP; the 8-character CRC portion of the key is shown as hidden text (.....).

❺ **Description of Option**–A short description of each option is given.

7.3.6.5 Example

To perform an operation, enter the choice number and any information requested by the submenu or prompts. The following example demonstrates how to enter a license key and enable write-back caching.

```
CLI> RUN FLS

------------------------------------------------------------------------------
      Firmware Licensing System (FLS) on node MASS
Option      State        License        Key
------------------------------------------------------------------------------
 RAID      DISABLED      INVALID        *none*
 WBCA      DISABLED      INVALID        *none*
 MIRR      DISABLED      INVALID        *none*

               RAID = RAID Option
               WBCA = Writeback Cache Option
               MIRR = Disk Mirroring Option
------------------------------------------------------------------------------
    1. Enable a firmware option
    2. Disable a firmware option
    3. Enter a license key for a firmware option
    4. Clear a license key for a firmware option
    0. Exit FLS
Enter selection (0:4) [0] ? 3
```

```
    1. Enter new license key+CRC for RAID   (current key is invalid)
    2. Enter new license key+CRC for WBCA   (current key is invalid)
    3. Enter new license key+CRC for MIRR   (current key is invalid)
    0. Return to main menu
Enter selection (0:3) [0] ? 2❶

Enter new WBCA key, including 8-character CRC, or enter 0
       to return to main menu: ACME_WIDGET_CORPVB8UWQ9C❷

*** License key verified ***

--------------------------------------------------------------------------------
      Firmware Licensing System (FLS) on node MASS
Option      State        License        Key
--------------------------------------------------------------------------------
 RAID      DISABLED      INVALID        *none*
 WBCA      DISABLED       VALID         ACME_WIDGET_CORP........
 MIRR      DISABLED      INVALID        *none*

               RAID = RAID Option
               WBCA = Writeback Cache Option
               MIRR = Disk Mirroring Option
--------------------------------------------------------------------------------
    1. Enable a firmware option
    2. Disable a firmware option
    3. Enter a license key for a firmware option
    4. Clear a license key for a firmware option
    0. Exit FLS
Enter selection (0:4) [0] ? 1

    1. Enable RAID
    2. Enable WBCA
    3. Enable MIRR
    0. Return to main menu
Enter selection (0:3) [0] ? 2❸
*** WBCA enabled ***

--------------------------------------------------------------------------------
      Firmware Licensing System (FLS) on node MASS
Option      State        License        Key
--------------------------------------------------------------------------------
 RAID      DISABLED      INVALID        *none*
 WBCA      ENABLED        VALID❹        ACME_WIDGET_CORP........
 MIRR      DISABLED      INVALID        *none*

               RAID = RAID Option
               WBCA = Writeback Cache Option
               MIRR = Disk Mirroring Option
--------------------------------------------------------------------------------
    1. Enable a firmware option
    2. Disable a firmware option
    3. Enter a license key for a firmware option
    4. Clear a license key for a firmware option
    0. Exit FLS
Enter selection (0:4) [0] ? Return
FLS - Normal Termination

CLI>
```

❶ The user chooses to enter a new license key for WBCA.

❷ The user enters the new license key, along with the customer license key, which is displayed as it is entered.

❸ The user enables write-back cache.

❹ This entry in the FLS display shows that write-back cache is enabled under a valid license.

7.3.6.6 Messages

This section lists the messages that you may receive from FLS.

option has been turned on without a valid license

Explanation: You have activated the option named by *option* without entering a valid license key. You can evaluate this option for a time to determine its value, and you will receive a valid license key when you purchase the license for the option.

Error *nnnn*: *option* support is not enabled on this controller

Explanation: The *option* you are attempting to use is not enabled in FLS. For example, if you try to turn on write-back caching, you will receive this error if write-back caching is not enabled by FLS.

WARNING: This is an invalid license Key+CRC

Explanation: The license key you entered is not between 6 and 32 characters, or the customer license key is not valid. Verify that the key is correct and reenter.

***Error: Disabling *option* is not possible at this time, option is in use ***

Explanation: You have attempted to disable the option named by *option* while it is in use. Refer to Section 7.3.6.2 for more information on disabling options.

7.3.7 Configure (CONFIG) Utility

The Configure Utility locates and adds new devices to an HS array controller's configuration.

7.3.7.1 When to Use the Configure Utility

You can run the Configure Utility whenever new devices are added to the HS array controller.

7.3.7.2 Description

The Configure Utility searches all PTL device combinations to determine what devices exist on the subsystem. It adds those new devices that are found. The Configure Utility does *not* initialize these devices, and it does *not* add units or storagesets.

Note

Currently, the Configure utility does not add tape loaders. You must configure tape loaders manually with CLI commands.

7.3.7.3 Running the Configure Utility

You can run the Configure Utility on either a virtual terminal or a maintenance terminal.

Before executing the RUN CONFIG command, add your new devices to your subsystem's storage shelves, following the steps in the device warm swap procedures described in Chapter 5.

Before running the Configure Utility, use the CLI> SHOW DEVICES command to verify the list of devices that are currently connected to the HS array controller, as shown in the following example. The example shows the Configure Utility as it is run on an HSJ or HSD30 array controller. The text of the prompts may change slightly when run on other controllers from the HS array controller family.

Note

Program names are limited to six characters. Therefore, to run this program, use RUN CONFIG as your command.

```
HSJ> SHOW DEVICES
No devices

HSJ> RUN CONFIG

Config Local Program Invoked

Config is building its tables and determining what devices exist
on the subsystem. Please be patient.

add disk DISK100   1 0 0
add disk DISK120   1 2 0
add disk DISK140   1 4 0
add disk DISK210   2 1 0
add disk DISK230   2 3 0
add disk DISK500   5 0 0
add disk DISK520   5 2 0
add tape TAPE600   6 0 0
add tape TAPE610   6 1 0

Config - Normal Termination

HSJ>

HSJ> SHOW DEVICES
Name          Type          Port Targ  Lun                    Used by
-------------------------------------------------------------------------

DISK100       disk             1    0    0
DISK120       disk             1    2    0
DISK140       disk             1    4    0
DISK210       disk             2    1    0
DISK230       disk             2    3    0
DISK500       disk             5    0    0
DISK520       disk             5    2    0
TAPE600       tape             6    0    0
TAPE610       tape             6    1    0

HSJ>
```

After you run the Configure Utility, you may have to initialize your containers using the INITIALIZE command as described in Appendix B.

If a device somewhere in the cluster already has the PTL that the Configure utility plans to assign, the program will assign an alpha character after the numbers. For example, if another device is called DISK100, the utility assigns the name DISK100A to the new device. (The utility compares this DISK100A to the other PTLs in the cluster, and if DISK100A has already been used, the utility increments to DISK100B and so forth). This avoids assigning duplicate device names in the same controller.

7.3.8 HSZterm Utility

The HSZterm utility provides a virtual terminal facility and a command passing capability for communicating with an HSZ controller over the SCSI bus. This utility allows DEC OSF/1 system administrators to configure HSZ array controllers using terminal windows. The window behaves as if it were a terminal attached directly to the HSZ controller. All controller commands except those that make use of cursor positioning escape sequences are supported. The utilities currently supported are FLS, CONFIG, FMU, and CLCP. Initial controller parameters and all other local programs must be entered/run from a maintenance terminal plugged directly into the terminal port of the HSZ front panel.

The HSZterm utility works with all systems that support the DEC OSF/1™ Operating System Version 2.0 or Version 3.0 and the HSZ40 array controller. The HSZ40 controller must be running HSOF Version 2.0 or later. In order to control RAID functions, licenses for those functions must be installed on the controller.

The HSZterm utility was developed for use with the DEC OSF/1 operating system. For further details on the utility, see the *StorageWorks Configuration Manager for DEC OSF/1 System Manager's Guide for HSZterm*.

7.3.9 Fault Manager Utility (FMU)

The Fault Manager Utility (FMU) allows you to display HS array controller last failure and memory system failure information, and control the spontaneous event logging and last failure logging displays. FMU also can provide a convenient way to review some event information during your terminal session. You can run FMU interactively during a terminal session by invoking it from the CLI prompt.

FMU only interprets errors that occur after you install and run controller firmware containing FMU. In other words, FMU cannot search for ''older'' errors, and you cannot install FMU in an attempt to troubleshoot a preexisting error. For a complete description of FMU commands, refer to the *StorageWorks Array Controllers HS Family of Array Controllers Service Manual*.

7.3.10 Configuration Menu (CFMENU)

The configuration menu (CFMENU) allows you to quickly configure storage devices attached to the controller. CFMENU uses a menu format to present configuration commands normally entered at the CLI.

The CFMENU utility requires a video terminal that supports ANSI control sequences, such as a VT220, VT320, or VT420 terminal. You can also use a graphics display that provides emulation of an ANSI compatible video terminal. For HSJ- and HS30 array controllers, you can run CFMENU on maintenance or virtual terminals. For HSZ array controllers, you can only run CFMENU on terminals connected the the controller maintenance terminal port. Prior to running CFMENU, be sure the terminal is set in NOWRAP mode. Otherwise, the display may not appear correctly on the screen.

You should have a good understanding of the various CLI commands described in Appendix B before running CFMENU, because CFMENU will ask you to choose options for devices, storagesets, and units based on the command qualifiers of the CLI.

This section presents an overview of one configuration, from start to finish. Only one example is described because of the many combinations of choices that can be made during any configuring situation. Note that the options for passthrough containers are not available for HSZ array controllers.

7.3.10.1 Restrictions

The following restrictions apply to CFMENU:

- For dual-redundant configurations, do not run CFMENU on both controllers at the same time.
- You can only set options for existing devices, storagesets, and units when you first add them to the configuration. You cannot modify any options later using CFMENU. To change option settings with CFMENU, you must delete and recreate the item. Otherwise, you can change options with CLI after exiting CFMENU.
- CFMENU does not automatically configure tape loaders. You must manually configure loaders with CLI commands.

7.3.10.2 Main Menu

Run CFMENU during a terminal session by invoking it from the CLI prompt:

```
CLI> RUN CFMENU
```

The main menu appears as shown in Figure 7–9. Any attached devices that have not been added to your configuration will appear, with their PTLs, in the column to the right of the menu options.

Figure 7–9 CFMENU Main Menu

```
------------------------------------------------ CFMENU  Configuration Menu Utility -----------------------------------------------
MAIN MENU:                    |Unconfig'd|     Config'd  Device       Product       Stor.set Stor.set Chnk  Trn  In- Re-       W W
1. Add/delete devices         | Dev.PTLs |       PTLs     Name          ID            Name    Typ/Sz  Size  sp. it'd duc  Unit P B
2. Add/delete mirrorsets      |----------|      ------ --------- ----------------  --------- ------- ------ --- ---- --- ----- - -
3. Add/delete stripesets      | 110 (dsk)|
4. Add/delete raidsets/       | 130 (dsk)|
   sparesets/failedsets       | 150 (dsk)|
5. Add/delete passthrough     | 200 (dsk)|
6. Initialize devices         | 220 (dsk)|
   and/or storagesets         | 240 (dsk)|
7. Add/delete units           | 300 (dsk)|
8. Setup terminal             | 310 (dsk)|
9. Exit CFMENU                | 320 (dsk)|
                              | 330 (ldr)|
                              | 340 (dsk)|
                              |          |
                              |          |
```

7.3.10.3 Adding Devices

From the main menu, enter option 1 (press 1 followed by Return). The device menu appears as shown in Figure 7–10. The same list of unconfigured devices remains to the right of the options. When the list is too long to be shown on one screen, you can enter D or U to scroll the information down or up.

Figure 7–10 CFMENU Device Menu (Before Adding Devices)

```
------------------------------------------------ CFMENU  Configuration Menu Utility ------------------------------------------------
DEVICE MENU:                    |Unconfig'd|     Config'd  Device       Product       Stor.set Stor.set Chnk  Trn  In- Re-       W W
1. Add a device from list       | Dev.PTLs |      PTLs     Name         ID            Name     Typ/Sz  Size  sp. it'd duc  Unit P B
   of PTLs not configured       |----------|      ------ --------- ----------------  --------- ------- ------ --- ---- --- ----- - -
   (marked with ^)              |^110 (dsk)|
2. Delete an unbounded device   |^130 (dsk)|
   (marked with *)              |^150 (dsk)|
3. Add all devices from list    |^200 (dsk)|
   of PTLs not configured       |^220 (dsk)|
   (marked with ^)              |^240 (dsk)|
4. Delete all unbounded         |^300 (dsk)|
   devices (marked with *)      |^310 (dsk)|
5. Return to main menu          |^320 (dsk)|
                                |^330 (ldr)|
                                |^340 (dsk)|
                                |          |
                                |          |
_____________________________________________________________________________________________________________________________

Enter menu choice (1,5) [5] ?
```

In Figure 7–10, none of the devices have been added to the configuration yet. If you enter option 1, CFMENU asks you whether or not to add each device on the list. If you enter option 3, CFMENU will add *all* the unknown devices, in the same way as the CONFIG utility (refer to Section 7.3.7).

After entering option 1 and adding some devices, the screen will resemble Figure 7–11.

Figure 7–11 CFMENU Device Menu

```
------------------------------------------------ CFMENU  Configuration Menu Utility ------------------------------------------------
DEVICE MENU:                    |Unconfig'd|     Config'd  Device       Product       Stor.set Stor.set Chnk  Trn  In- Re-       W W
1. Add a device from list       | Dev.PTLs |      PTLs     Name         ID            Name     Typ/Sz  Size  sp. it'd duc  Unit P B
   of PTLs not configured       |----------|      ------ --------- ----------------  --------- ------- ------ --- ---- --- ----- - -
   (marked with ^)              |^130 (dsk)| disks:  110 *  DISK110 RZ26     (C) DEC                           N    N
2. Delete an unbounded device   |^220 (dsk)|         150 *  DISK150 RZ25     (C) DEC                           N    N
   (marked with *)              |^300 (dsk)|         200 *  DISK200 RZ25     (C) DEC                           N    N
3. Add all devices from list    |^320 (dsk)|         240 *  DISK240 RZ25     (C) DEC                           N    N
   of PTLs not configured       |^330 (ldr)|         310 *  DISK310 RZ25     (C) DEC                           N    N
   (marked with ^)              |          |         340 *  DISK340 RZ35     (C) DEC                           N    Y
4. Delete all unbounded         |          |
   devices (marked with *)      |          |
5. Return to main menu          |          |
                                |          |
                                |          |
                                |          |
                                |          |
_____________________________________________________________________________________________________________________________

Enter menu choice (1,5) [5] ?
```

CFMENU has added information to the following fields:

- **Config'd PTLs**—Configured PTLs. The program lists the PTL of each device added to your configuration.
- **Device Name**—CFMENU automatically assigns a name to each device. The name contains both the device type and PTL. You cannot override the automatic CFMENU naming convention.
- **Product ID**—Information identifying the device model appears here.
- **Trnsp**—Transportable. This field identifies whether the device is transportable.

- **Init'd**—Initialized. This field identifies whether or not the device is initialized.

After adding devices, return to the main menu.

7.3.10.4 Adding Mirrorsets

Enter option 2 from the main menu to work with mirrorsets. From the mirrorset menu (see Figure 7–12), enter option 1 to add a mirrorset. CFMENU prompts you for how many and which devices from the configured PTLs list you wish to include in the mirrorset (2 to 14 devices allowable). In Figure 7–12, two mirrorsets were created, one from disks at PTLs 110 and 300, and the other from disks at PTLs 130 and 150.

Figure 7–12 CFMENU Mirrorset Menu

```
------------------------------------------------ CFMENU  Configuration Menu Utility ------------------------------------------------
MIRRORSET MENU:              |Unconfig'd|     Config'd  Device       Product       Stor.set Stor.set Chnk  Trn  In- Re-       W W
1. Create a mirrorset (elig- | Dev.PTLs |       PTLs     Name          ID            Name    Typ/Sz  Size  sp. it'd duc  Unit P B
   ible devices marked by ^) |----------|      ------ ---------  ----------------  --------- ------- ------ --- ---- --- ----- - -
2. Delete an unbounded       |          | disks:  200 ^  DISK200 RZ25     (C) DEC                          N    Y
   mirrorset (marked by *)   |          |         220 ^  DISK220 RZ25     (C) DEC                          N    Y
3. Delete all unbounded      |          |         240 ^  DISK240 RZ25     (C) DEC                          N    Y
   mirrorsets (marked by *)  |          |         310 ^  DISK310 RZ25     (C) DEC                          N    Y
4. Mirror a disk (eligible   |          |         320 ^  DISK320 RZ25     (C) DEC                          N    Y
   devices marked by +)      |          |         330 ^  DISK330 RZ26     (C) DEC                          N    Y
5. Unmirror a disk (eligible |          |         340 ^  DISK340 RZ35     (C) DEC                          N    Y
   devices marked by -)      |          | miror:  110    DISK110 RZ26     (C) DEC *    M1    MIR/2               Y   N
6. Change membership of a    |          |         300    DISK300 RZ26     (C) DEC      "       "                 "   "
   mirrorset (submenu)       |          |         130    DISK130 RZ25     (C) DEC *    M2    MIR/2               N   N
7. Return to main menu       |          |         150    DISK150 RZ25     (C) DEC      "       "                 "   "
                             |          |
                             |          |
```

CFMENU updates the following fields after adding a mirrorset:

- **Stor.set Name**—Storageset name. CFMENU automatically assigns the name ''M*x*'' to a mirrorset. You cannot alter this automatic CFMENU naming convention.
- **Stor.set Typ/Sz**—Storageset type and size. This field will read ''MIR'' for storagesets that are mirrorsets and indicate the number of members in the mirrorset.

After adding mirrorsets, return to the main menu.

7.3.10.5 Adding Stripesets

Enter option 3 from the main menu to work with stripesets. From the stripeset menu (see Figure 7–13), enter option 1 to add a stripeset. CFMENU will ask you how many and which devices from the configured PTLs list you wish to include in the stripeset (2 to 14 devices allowable). In Figure 7–13, a stripeset was created from the disk at PTL 200 and the mirrorsets M1 and M2.

Figure 7–13 CFMENU Stripeset Menu

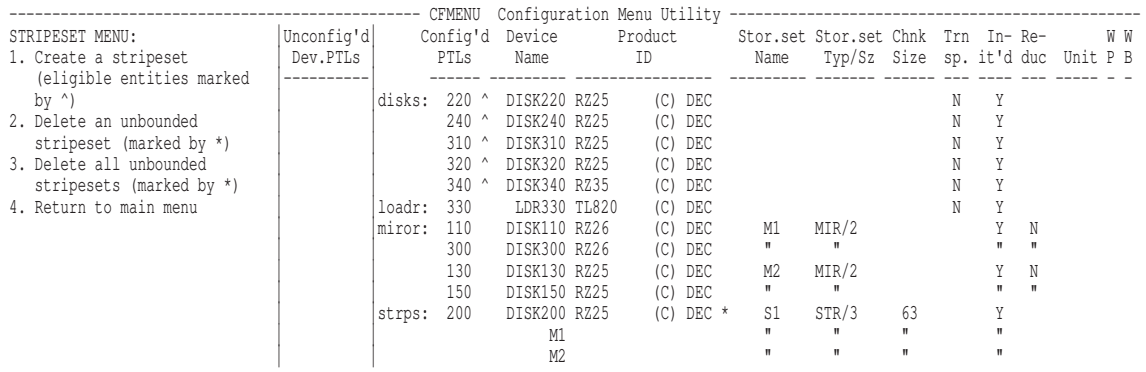

```
------------------------------------------------ CFMENU  Configuration Menu Utility ------------------------------------------------
STRIPESET MENU:                 |Unconfig'd|     Config'd  Device       Product       Stor.set Stor.set Chnk  Trn  In- Re-       W W
1. Create a stripeset           | Dev.PTLs |       PTLs     Name          ID           Name    Typ/Sz  Size  sp. it'd duc  Unit P B
   (eligible entities marked    |----------|      ------ --------- ----------------  --------- ------- ------ --- ---- --- ----- - -
   by ^)                        |          |disks:  220 ^  DISK220 RZ25     (C) DEC                           N    Y
2. Delete an unbounded          |          |        240 ^  DISK240 RZ25     (C) DEC                           N    Y
   stripeset (marked by *)      |          |        310 ^  DISK310 RZ25     (C) DEC                           N    Y
3. Delete all unbounded         |          |        320 ^  DISK320 RZ25     (C) DEC                           N    Y
   stripesets (marked by *)     |          |        340 ^  DISK340 RZ35     (C) DEC                           N    Y
4. Return to main menu          |          |loadr:  330     LDR330 TL820    (C) DEC                           N    Y
                                |          |miror:  110    DISK110 RZ26     (C) DEC      M1    MIR/2                Y   N
                                |          |        300    DISK300 RZ26     (C) DEC      "       "                  "   "
                                |          |        130    DISK130 RZ25     (C) DEC      M2    MIR/2                Y   N
                                |          |        150    DISK150 RZ25     (C) DEC      "       "                  "   "
                                |          |strps:  200    DISK200 RZ25     (C) DEC *    S1    STR/3     63         Y
                                |          |                    M1                       "       "       "           "
                                |          |                    M2                       "       "       "           "
```

CFMENU updates the following fields after adding a stripeset:

- **Stor.set Name**—Storageset name. CFMENU automatically assigns the name ‘‘S*x*’’ to a stripeset. You cannot alter this automatic CFMENU naming convention.
- **Stor.set Typ/Sz**—Storageset type and size. This field will read ‘‘STR’’ for storagesets that are stripesets, and indicate the number of members in the stripeset.
- **Chnk Size**—Chunk size. This field will read ‘‘unk’’ (unknown) until you initialize the stripeset.

After adding stripesets, return to the main menu.

7.3.10.6 Adding RAIDsets

Enter option 4 from the main menu to work with RAIDsets. From the RAIDset menu (see Figure 7–14), enter option 1 to add a RAIDset. CFMENU will ask you how many and which devices from the configured PTLs list you wish to include in the RAIDset (3 to 14 devices allowable). In Figure 7–14, a RAIDset was created from disks at PTLs 220, 240, and 310.

Figure 7–14 CFMENU RAIDset Menu

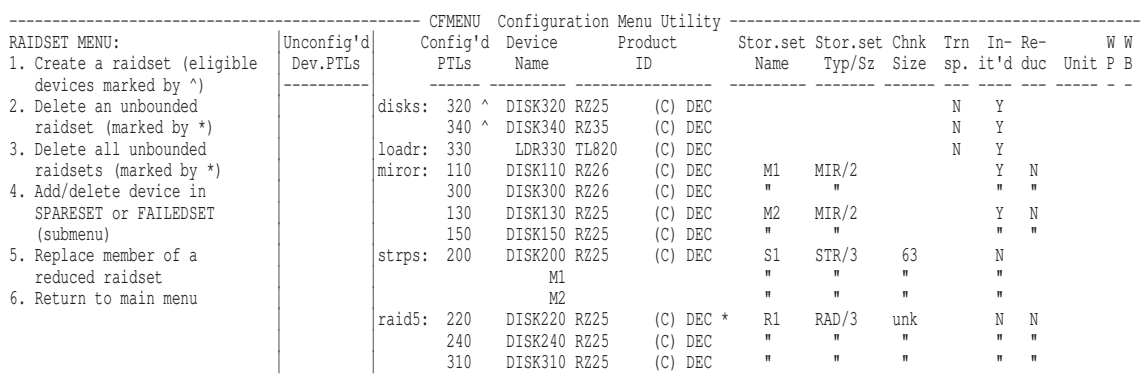

```
------------------------------------------------ CFMENU  Configuration Menu Utility ------------------------------------------------
RAIDSET MENU:                   |Unconfig'd|     Config'd  Device       Product       Stor.set Stor.set Chnk  Trn  In- Re-       W W
1. Create a raidset (eligible   | Dev.PTLs |       PTLs     Name          ID           Name    Typ/Sz  Size  sp. it'd duc  Unit P B
   devices marked by ^)         |----------|      ------ --------- ----------------  --------- ------- ------ --- ---- --- ----- - -
2. Delete an unbounded          |          |disks:  320 ^  DISK320 RZ25     (C) DEC                           N    Y
   raidset (marked by *)        |          |        340 ^  DISK340 RZ35     (C) DEC                           N    Y
3. Delete all unbounded         |          |loadr:  330     LDR330 TL820    (C) DEC                           N    Y
   raidsets (marked by *)       |          |miror:  110    DISK110 RZ26     (C) DEC      M1    MIR/2                Y   N
4. Add/delete device in         |          |        300    DISK300 RZ26     (C) DEC      "       "                  "   "
   SPARESET or FAILEDSET        |          |        130    DISK130 RZ25     (C) DEC      M2    MIR/2                Y   N
   (submenu)                    |          |        150    DISK150 RZ25     (C) DEC      "       "                  "   "
5. Replace member of a          |          |strps:  200    DISK200 RZ25     (C) DEC      S1    STR/3     63         N
   reduced raidset              |          |                    M1                       "       "       "           "
6. Return to main menu          |          |                    M2                       "       "       "           "
                                |          |raid5:  220    DISK220 RZ25     (C) DEC *    R1    RAD/3    unk         N   N
                                |          |        240    DISK240 RZ25     (C) DEC      "       "       "           "   "
                                |          |        310    DISK310 RZ25     (C) DEC      "       "       "           "   "
```

CFMENU updates the following fields after adding a RAIDset:

- **Stor.set Name**—Storageset name. CFMENU automatically assigns the name ''R*x*'' to a RAIDset. You cannot alter this automatic CFMENU naming convention.
- **Stor.set Typ/Sz**—Storageset type. This field will read ''RAD'' for storagesets that are RAIDsets, and indicate the number of members in the RAIDset.
- **Chnk Size**—Chunk size. This field will read ''unk'' (unknown) until you initialize the RAIDset.

7.3.10.7 Adding to Sparesets

Enter option 5 (HSJ and HSD30 array controllers) or option 4 (HSZ array controllers) from the RAIDset menu to work with the sparesets and failedsets associated with RAIDsets. From the spareset/failedset menu (see Figure 7–15), you can, for example, enter option 1 to add a device to the spareset. CFMENU will ask you which devices from the configured PTLs list you wish to include in the spareset. In Figure 7–15, one device, PTL 320, was added to the spareset.

Figure 7–15 CFMENU Spareset/Failedset Menu

```
------------------------------------------------ CFMENU  Configuration Menu Utility ------------------------------------------------
SPARESET/FAILEDSET MENU:        |Unconfig'd|     Config'd  Device       Product       Stor.set Stor.set Chnk  Trn  In- Re-       W W
1. Add a device to the          | Dev.PTLs |       PTLs     Name          ID            Name    Typ/Sz  Size  sp. it'd duc  Unit P B
   SPARESET (eligible           |----------|      ------ --------- ----------------  --------- ------- ------ --- ---- --- ----- - -
   devices marked by ^)         |          |disks:  340 ^  DISK340 RZ35     (C) DEC                          N    Y
2. Remove a device from the     |          |loadr:  330     LDR330 TL820    (C) DEC                          N    Y
   SPARESET                     |          |miror:  110    DISK110 RZ26     (C) DEC      M1    MIR/2                Y   N
3. Remove a device from a       |          |        300    DISK300 RZ26     (C) DEC      "       "                  "   "
   RAIDSET and place in the     |          |        130    DISK130 RZ25     (C) DEC      M2    MIR/2                Y   N
   FAILEDSET (eligible devices  |          |        150    DISK150 RZ25     (C) DEC      "       "                  "   "
   marked by *)                 |          |strps:  200    DISK200 RZ25     (C) DEC      S1    STR/3     63         N
4. Remove a device from the     |          |                    M1                      "       "       "          "
   FAILEDSET                    |          |                    M2                      "       "       "          "
5. Return to RAIDSET menu       |          |raid5:  220    DISK220 RZ25     (C) DEC      R1    RAD/3    unk         N   N
                                |          |        240    DISK240 RZ25     (C) DEC      "       "       "          "   "
                                |          |        310    DISK310 RZ25     (C) DEC      "       "       "          "   "
                                |          |spare:  320    DISK320 RZ25     (C) DEC
```

After adding sparesets, return to the main menu via the RAIDset menu.

7.3.10.8 Adding Passthroughs (HSJ and HSD30 array controllers)

Enter option 5 from the main menu to work with passthroughs. From the passthrough menu (see Figure 7–16), enter option 1 to add a passthrough. CFMENU will ask you which device from the configured PTLs list you wish to include in the passthrough.

Although you may add any generic SCSI device, you will normally add devices requiring the use of MSCP read and write operations as a transport for SCSI commands (such as ''jukebox'' style loaders). In Figure 7–16, a passthrough was created from the tape library (loader) at PTL 330.

Figure 7–16 CFMENU Passthrough Menu

```
------------------------------------------------ CFMENU  Configuration Menu Utility ------------------------------------------------
PASSTHROUGH MENU:              |Unconfig'd|     Config'd  Device       Product       Stor.set Stor.set Chnk  Trn  In- Re-       W W
1. Create a passthrough        | Dev.PTLs |       PTLs     Name          ID           Name    Typ/Sz  Size  sp. it'd duc  Unit P B
   (eligible devices marked    |----------|      ------ --------- ----------------  --------- ------- ------ --- ---- --- ----- - -
   by ^)                       |          |disks:  340 ^  DISK340 RZ35     (C) DEC                          N    Y
2. Delete an unbounded         |          |miror:  110    DISK110 RZ26     (C) DEC      M1    MIR/2               Y   N
   passthrough (marked         |          |        300    DISK300 RZ26     (C) DEC      "       "                 "   "
   by *)                       |          |        130    DISK130 RZ25     (C) DEC      M2    MIR/2               Y   N
3. Delete all unbounded        |          |        150    DISK150 RZ25     (C) DEC      "       "                 "   "
   passthroughs (marked        |          |strps:  200    DISK200 RZ25     (C) DEC      S1    STR/3     63        N
   by *)                       |          |                    M1                       "       "       "         "
4. Return to main menu         |          |                    M2                       "       "       "         "
                               |          |raid5:  220    DISK220 RZ25     (C) DEC      R1    RAD/3    unk        N   N
                               |          |        240    DISK240 RZ25     (C) DEC      "       "       "         "   "
                               |          |        310    DISK310 RZ25     (C) DEC      "       "       "         "   "
                               |          |spare:  320    DISK320 RZ25     (C) DEC
                               |          |pass:   330    LDR330  TL820    (C) DEC      P1    PASS
```

CFMENU updates the following fields after adding a passthrough:

- **Stor.set Name**—Storageset name. CFMENU automatically assigns the name ''P*x*'' to a passthrough. You cannot alter this automatic CFMENU naming convention.
- **Stor.set Typ/Sz**—Storageset type. This field will read ''PASS'' for passthroughs.

After adding passthroughs, return to the main menu.

7.3.10.9 Initializing Containers

Enter option 6 (HSJ and HSD30 array controllers) or option 5 (HSZ array controllers) from the main menu to initialize containers (devices or storagesets). From the initialization menu (see Figure 7–17), enter option 1. CFMENU will ask you if you want to initialize each eligible container.

In addition, CFMENU will ask you to decide on other operating qualifiers, depending on whether the container is a device, mirrorset, stripeset, or RAIDset. See the descriptions of the ADD or SET commands in Appendix B if you need help understanding the qualifiers.

In Figure 7–17, the mirrorsets created earlier (M1 and M2) are initialized. The disk at PTL 340 has been initialized throughout this example, because CFMENU detected its condition when it was added to the configuration.

Figure 7–17 CFMENU Initialization Menu

```
------------------------------------------------ CFMENU  Configuration Menu Utility ------------------------------------------------
INITIALIZATION MENU:          |Unconfig'd|     Config'd  Device       Product       Stor.set Stor.set Chnk  Trn  In-  Re-       W W
1. Initialize a device or     | Dev.PTLs |       PTLs     Name          ID            Name    Typ/Sz  Size  sp. it'd duc  Unit P B
   storageset (eligible       |----------|      ------ --------- ----------------  --------- ------- ------ --- ---- --- ----- - -
   entities marked with ^)    |          |disks:  340 ^  DISK340 RZ35     (C) DEC                          N    Y
2. Return to main menu        |          |miror:  110    DISK110 RZ26     (C) DEC      M1    MIR/2               Y   N
                              |          |        300    DISK300 RZ26     (C) DEC      "       "                 "   "
                              |          |        130    DISK130 RZ25     (C) DEC      M2    MIR/2               Y   N
                              |          |        150    DISK150 RZ25     (C) DEC      "       "                 "   "
                              |          |strps:  200    DISK200 RZ25     (C) DEC ^    S1    STR/3     63        N
                              |          |                    M1                       "       "       "         "
   WARNING!  Initialization of|          |                    M2                       "       "       "         "
   any device or storageset   |          |raid5:  220    DISK220 RZ25     (C) DEC ^    R1    RAD/3    unk        N   N
   will destroy all of its    |          |        240    DISK240 RZ25     (C) DEC      "       "       "         "   "
   current data.              |          |        310    DISK310 RZ25     (C) DEC      "       "       "         "   "
                              |          |spare:  320    DISK320 RZ25     (C) DEC
                              |          |pass:   330    LDR330  TL820    (C) DEC      P1    PASS
```

After initializing containers, return to the main menu.

7.3.10.10 Adding Units

Enter option 7 (HSJ and HSD30 array controllers) or option 6 (HSZ array controllers) from the main menu to work with units. From the unit menu (see Figure 7–18), enter option 1 to add a unit. CFMENU will ask you which initialized containers you wish to create units from.

CFMENU also will ask you to assign a unit number. (The program automatically assigns a ‘‘D’’ or ‘‘T’’ to the unit number when listing the unit, as shown in Figure 7–18.) In addition, CFMENU will ask you to decide on other unit qualifiers. See the description of the ADD *unit* or SET *unit* commands in Appendix B if you need help understanding the qualifiers.

In Figure 7–18, a unit was created from stripeset S1.

Figure 7–18 CFMENU Unit Menu

```
------------------------------------------------ CFMENU  Configuration Menu Utility ------------------------------------------------
UNIT MENU:                      |Unconfig'd|     Config'd  Device       Product       Stor.set Stor.set Chnk  Trn  In- Re-       W W
1. Create a unit (eligible      | Dev.PTLs |       PTLs     Name          ID            Name    Typ/Sz  Size  sp. it'd duc  Unit P B
   entities marked by ^)        |----------|      ------ --------- ----------------  --------- ------- ------ --- ---- --- ----- - -
2. Delete a unit (eligible      |          |disks:  340 ^  DISK340 RZ35     (C) DEC                            N    Y
   units marked by *)           |          |miror:  110    DISK110 RZ26     (C) DEC      M1    MIR/2                Y   N
3. Return to main menu          |          |        300    DISK300 RZ26     (C) DEC      "       "                  "   "
                                |          |        130    DISK130 RZ25     (C) DEC      M2    MIR/2                Y   N
                                |          |        150    DISK150 RZ25     (C) DEC      "       "                  "   "
                                |          |strps:  200    DISK200 RZ25     (C) DEC      S1    STR/3     63         Y     * D100 Y N
                                |          |                    M1                       "       "       "          "        "   " "
                                |          |                    M2                       "       "       "          "        "   " "
                                |          |raid5:  220    DISK220 RZ25     (C) DEC ^    R1    RAD/3     63         Y   N
                                |          |        240    DISK240 RZ25     (C) DEC      "       "       "          "   "
                                |          |        310    DISK310 RZ25     (C) DEC      "       "       "          "   "
                                |          |spare:  320    DISK320 RZ25     (C) DEC
                                |          |pass:   330    LDR330  TL820    (C) DEC      P!    PASS
```

CFMENU updates the following fields after adding a unit:

- **Reduc**—Reduced. This field indicates whether or not a RAIDset is running reduced (missing one member).
- **Unit**—The unit number you assign appears here, preceded by the letter ‘‘D’’ or ‘‘T.’’
- **WP**—Write protect. This value indicates whether or not the unit is write protected.
- **WB**—Write-back. This value indicates whether or not the unit is set for write-back caching.

7.3.10.11 Terminal Setup

You can enter option 8 (HSJ and HSD30 array controllers) or option 7 (HSZ array controllers) from the main menu to set the number of rows CFMENU will display. This feature is available primarily for terminals with the capability of displaying more than 24 rows.

7.3.10.12 Messages

This section lists the messages, other than the standard CLI messages, that CFMENU will display. However, most messages you will see will be those sent by the CLI, and are described in Appendix B.

CFMENU cannot complete request without exceeding array boundary.

Explanation: CFMENU detected an unexpected condition which would exceed an array boundary and possibly require controller reinitialization, so it aborted your request.

...CFMENU is updating its configuration tables. Please be patient...

Explanation: CFMENU is polling the SCSI ports to see what physical devices are in place, as well as checking the configuration information.

MIRROR license is not enabled; cannot create mirrorset.

Explanation: You may not configure any mirrorsets unless the Disk Mirroring license has been enabled by running the FLS utility.

Not enough eligible devices to complete the storageset.

Explanation: You chose to create a stripeset or a RAIDset and specified how many members to use, but there are not enough eligible devices to make up a storageset of this size. Eligible devices are disks that have the NOTRANSPORTABLE switch set, and that are not already used in any higher-level configuration such as a unit, storageset, spareset, or failedset.

Not enough members specified for a non-reduced RAIDset

Explanation: You chose to create a RAIDset and specified that it is not a previously reduced RAIDset. However, when choosing how many members to add to the RAIDset, you specified a number that is only legal for a reduced RAIDset and is too low for a nonreduced RAIDset.

...Polling for unconfigured devices...

Explanation: CFMENU is polling the SCSI ports to see what physical devices are in place.

Port *port#* is blocked. No devices will be configured on port *port#*

Explanation: In order to check each device bus to discover what devices are present, firmware must also see if any port is currently blocked. A port can be blocked for various reasons, such as when its bus is quiesced. When a port is blocked, CFMENU will not access devices on that bus.

RAID5 license is not enabled; cannot create RAID5 set.

Explanation: You may not configure any RAIDsets unless the RAID5 license has been enabled by running the FLS utility.

Received user request to terminate CFMENU...

Explanation: You pressed Ctrl/C or Ctrl/Y to abort CFMENU.

There are no devices available to use as a replacement.

Explanation: You chose to replace a member of a reduced RAIDset, but there are no disks eligible to use for the replacement member. Eligible disks must have the NOTRANSPORTABLE switch set and may not be part of any higher-level configuration such as units, storagesets, or the spareset or failedset.

There are no devices available to use in a passthrough

Explanation: You chose to create a passthrough container, but there are no devices eligible to be added to a passthrough. Eligible devices are any SCSI device that is not already used in any higher-level configuration such as a unit, storageset, spareset, or failedset. Disk devices must be set NOTRANSPORTABLE to be eligible.

There are no *devices/stripesets/RAIDsets/passthroughs* eligible for deletion.

Explanation: You chose to delete a device, stripeset, RAIDset, or passthrough; but there are none that are eligible for deletion. A stripeset, RAIDset, or passthrough may not be deleted if it is configured as a unit. A device may not be deleted if it is configured as a unit or if it is used in a storageset, spareset, or failedset.

There are no devices eligible to be added to the configuration.

Explanation: You chose to add a device, but there are no devices available to add. The only devices that are eligible to be added are devices that CFMENU has detected as being physically present on a SCSI port and that are not already configured as devices on the controller.

There are no devices eligible to be added to the spareset.

Explanation: You chose to add a device to the spareset, but no devices are eligible. The only devices that may be added to the spareset are disks that have the NOTRANSPORTABLE switch set, and that are not already used in any higher-level configuration such as a unit, storageset, spareset, or failedset.

There are no devices eligible to be mirrored.

Explanation: You chose to mirror a device but there are no devices eligible to be mirrored. Eligible devices are disks that have the NOTRANSPORTABLE switch set and are configured as units or as part of a stripeset unit.

There are no devices eligible to be unmirrored.

Explanation: You chose to unmirror a device but there are no devices eligible to be unmirrored. Eligible devices are the only members of 1-member mirrorsets that are configured as units or as part of a stripeset unit.

There are no devices in the failedset.

Explanation: You chose to delete devices from the failedset but the failedset currently is empty.

There are no devices in the spareset.

Explanation: You chose to delete devices from the spareset but the spareset currently is empty.

There are no entities eligible for initialization.

Explanation: You chose to initialize a device or storageset, but there are currently no devices or storagesets that are eligible to be initialized. Tapes, CD–ROMs, loaders, and passthrough devices may not be initialized. Optical memory devices, stripesets, and RAIDsets may be initialized, but only if they are not already configured as a unit. Disks may be initialized only if they are not already configured as a unit or as part of a storageset, spareset, or failedset.

There are no entities eligible to be added as units.

Explanation: You chose to add a unit, but there are no devices or storagesets that are eligible to become units. Tape and CD–ROM devices (HSJ- and HSD30 array controller only) can be added as units unless they are already configured as units. Passthrough containers (HSJ- and HSD30 array controllers only) also can be added as units unless they are already configured as units. Disks, optical memory, stripesets, and RAIDsets must first be initialized before they can be added as units. Disks may not be made into units if they are currently in the spareset or the failedset.

There are no mirrorsets eligible for changing membership count.

Explanation: You chose to change the membership count of a mirrorset, but there are no mirrorsets eligible for this operation. To be eligible, a mirrorset must be associated with a unit and must not already have the maximum number of members allowed for a mirrorset.

There are no reduced *RAIDset/mirrorset* units with NOPOLICY set.

Explanation: You chose to replace a member of a reduced RAIDset. CFMENU is unable to find any RAIDsets that are eligible for a manual replacement. In order to be eligible, the RAIDset must be configured as a unit, it must be in a reduced state, and it must have the NOPOLICY switch set.

There are no storageset units with members that can be moved to the FAILEDSET.

Explanation: You chose to move a device from a storageset to the FAILEDSET, but there are no devices eligible for that operation. Eligible devices must be members of RAIDsets or mirrorsets that are associated with a unit. If the device is a member of a RAIDset, it must not be a reduced RAIDSET. If the device is a member of a mirrorset, removing the device from the mirrorset must leave at least one member of the mirrorset in a normal state.

There are no units to delete.

Explanation: You chose to delete a unit, but there are no units configured on the controller.

Unable to allocate memory, CFMENU terminating.

Explanation: There is not enough memory available for CFMENU to run.

User has not picked enough eligible devices to complete the storageset.

Explanation: You chose to create a stripeset or a RAIDset and specified how many members to use, but when CFMENU prompted for devices, you did not select enough to complete the storageset.

Waiting for completion of CLI command...

Explanation: Some CLI commands take a long time to complete, such as initializing a large RAIDset or adding a tape drive that needs to have the tape rewound. CFMENU prints out this message periodically to inform you that it is still waiting for the last CLI command to finish.

7.3.10.13 Exiting CFMENU

Enter the last option from the main menu to stop CFMENU and return to the CLI. (You also may enter Ctrl/C or Ctrl/Y to abort CFMENU.)

7.3.11 Code Load/Code Patch (CLCP) Utility

The Code Load/Code Patch utility allows you to perform two memory modification functions in the controller:

- Code loading—You can upgrade the firmware in your controller's PCMCIA card via the MMJ maintenance port (HSZ40–B*x* only).

Note

The code load portion of the CLCP utility is only supported on HSZ40–B*x* array controllers with HSOF firmware Version 2.1 or greater.

- Code patching—You can alter memory locations in the controller's RAM while the controller is active.

7.3.11.1 Invoking the CLCP Utility

The CLCP utility is invoked using the RUN command via the CLI interface as follows:

```
CLI> RUN CLCP

 Select an option from the following list:

 Code Load & Code Patch local program Main Menu

        0: Exit
        1: Enter Code LOAD local program
        2: Enter Code PATCH local program

  Enter option number  (0..2) [0] ?
```

You select the desired option number and the appropriate option of the utility executes, prompting for further inputs.

CAUTION

The write protect switch on the program card is shipped from the factory in the write protect position. Before loading or patching the program card, slide the write protect switch on the bottom right-hand end (when the label is facing up) of the card (this can be done with the card still inserted in its slot) to the *left*. This action shuts off the write protection and allows you to write the new information. When the card has been rewritten, remember to slide the switch back to the *right* (the write protect position).

7.3.11.2 Code Loading

The Code Load option of the CLCP utility is invoked from an external processor (typically a personal computer) connected to the maintenance terminal port on the front bezel of the controller. The processor must be configured to run the KERMIT terminal protocol at 19,200 baud, with 8 data bits, no parity, and one stop bit. When running the Code Load option of the CLCP utility from a personal computer, all screen savers should be disabled. Screen savers are terminate-and-stay-ready (TSR) programs that can interfere with the code loading process.

To perform a code load operation, a file containing the new firmware image must be stored in the external processor. The file must be in binary image format. The binary firmware image file can be obtained from your Digital representative. Contact your Digital representative for more details on the distribution of firmware updates.

The user invokes the CLCP utility from the CLI via the external processor. The CLCP program then waits to be downloaded from the external processor via the serial interface and the KERMIT file transfer protocol.

Once loaded into the HSZ40–B*x* controller's memory, the new image is written into the controller's PCMCIA program card. The Code Load program then automatically initializes the controller to place the new controller firmware into effect.

7.3.11.3 Using Code Load

Note

If you run the Code Load option of the CLCP utility from a personal computer, disable all screen savers while the code load program is in process.

Operate the Code Load utility as follows:

1. Load the binary firmware image file into the external processor using file or network transfer utilities appropriate to the operating environment of the external processor.
2. Invoke the CLCP utility and select the Code Load option as follows:

```
CLI> RUN CLCP

 Select an option from the following list:

 Code Load & Code Patch local program Main Menu:

        0: Exit
        1: Enter Code LOAD local program
        2: Enter Code PATCH local program

  Enter option number (0..2) [0] ? 1
----------------------------------------------------------------

 You have selected the Code Load local program.  This program is
 used to load a new firmware image on the program card currently
 inserted in the controller.  The file transfer is performed using
 a computer running the KERMIT file transfer protocol.  This computer
 is connected via a serial communication line to the service port on
 the controller board.

 Type ^Y or ^C (then RETURN) at any time to abort Code Load.
```

```
Perform the following steps before continuing:
    * get new image file on serial line host computer
    * configure KERMIT with the following parameters:
         terminal speed 19200 baud, eight bit, no parity, 1 stop bit

WARNING: proceeding with Code Load will overwrite the current
         content of your program card with a new image.
         Enter Y (then RETURN) to continue [N]: ? Y

Start KERMIT now...
```

3. Using the KERMIT file transfer protocol from the external processor, download the binary firmware image file to the HSZ40–B*x* array controller. The details of this action are specific to the operating environment of the external processor.

4. The Code Load program acknowledges the downloaded file and writes the new firmware image to the PCMCIA program card memory.

```
KERMIT file transferred successfully.

Program card is being re-programmed with new file.
 *** Do not interrupt this step ***

         Copyright (c) 1989, 1990, 1991, Intel Corporation

CLI>
```

Code Load Aborted at Confirmation Step

You can abort a code load in progress by entering N at the confirmation step or by entering ^Y or ^C (and RETURN) at anytime in the code load process. Following are examples of types of code load interruption:

```
CLI> RUN CLCP

 Select an option from the following list:

 Code Load & Code Patch Local Program Main Menu

 0: Exit
 1: Enter Code LOAD local program
 2: Enter Code PATCH local program

  Enter option number (0..2) [0] ? 1
-------------------------------------------------------------------------

 You have selected the Code Load local program.  This program is
 used to load a new firmware image on the program card currently
 inserted in the controller.  The file transfer is performed using
 a computer running the KERMIT file transfer protocol.  This computer
 is connected via a serial communication line to the service port on
 the controller board.

 Type ^Y or ^C (then RETURN) at any time to abort code load.

 Perform the following steps before continuing:
     * get new image file on serial line host computer
     * configure KERMIT with the following parameters:
          terminal speed 19200 baud, eight bit, no parity, 1 stop bit

 WARNING: proceeding with Code Load will overwrite the current
          content of your program card with a new image.
          Enter Y (then RETURN) to continue [N]: ? N

Received user request to terminate Code Load...
```

Code Load Aborted by Interrupting KERMIT Before the Code Image Is Sent

```
CLI> RUN CLCP

 Select an option from the following list:

 Code Load & Code Patch local program Main Menu

 0: Exit
 1: Enter Code LOAD local program
 2: Enter Code PATCH local program

  Enter option number (0..2) [0] ? 1
-------------------------------------------------------------------------

 You have selected the Code Load local program.  This program is
 used to load a new firmware image on the program card currently
 inserted in the controller.  The file transfer is performed using
 a computer running the KERMIT file transfer protocol.  This computer
 is connected via a serial communication line to the service port on
 the controller board.

 Type ^Y or ^C (then RETURN) at any time to abort code load.

 Perform the following steps before continuing:
     * get new image file on serial line host computer
     * configure KERMIT with the following parameters:
          terminal speed 19200 baud, eight bit, no parity, 1 stop bit

 WARNING: proceeding with Code Load will overwrite the current
          content of your program card with a new image.
          Enter Y (then RETURN) to continue [N]: ? Y

Start KERMIT now..^C

Received user request to terminate Code Load...
```

7.3.11.4 Code Patching

The Code Patch option of the CLCP utility can be run from either a maintenance terminal or a virtual host terminal. You enter the appropriate patch information directly into the program and the program places it into the controller's non-volatile memory. The patch becomes active after the first controller initialization.

Note

The Code Patch option of the CLCP utility is supported on all HS array controller models.

The Code Patch option allows more than one patch to be entered for a given firmware version. Each patch is associated with only one firmware version and the Code Patch program verifies the patch against the currently installed firmware version. Some patches require the installation of previous patches, called dependent patches, before they can be installed. To identify it, each patch has a unique patch number. Operate the Code Patch option of the CLCP utility as follows:

1. Obtain the appropriate patch data for your controller's firmware version from your Digital representative.

2. Invoke the program as follows:

```
CLI> RUN CLCP

 Select an option from the following list:

 Code Load & Code Patch local program Main Menu

        0: Exit
        1: Enter Code LOAD local program
        2: Enter Code PATCH local program

  Enter option number (0..2) [0] ? 2
-------------------------------------------------------------------------

 Code Patch Main Menu

       0: Exit
       1: Enter a Patch
       2: Delete Patches
       3: List Patches

  Enter option number (0..3) [0] ?
```

3. Select the desired Code Patch option by entering an option number and pressing RETURN.

Note

The patch data in these examples is provided only for the purposes of illustrating the code patch operation. Obtain actual code patch data for your controller's firmware version from your Digital representative.

7.3.11.5 Special Code Patch Considerations

Consider the following when using the Code Patch option of the CLCP utility:

- The controller reserves enough non-volatile memory for approximately ten (10) patches. However, this number varies according to the size of the patches you enter.
- Patches are hierarchical. In other words, patch number 1 must be entered before you enter patch number 2, and so on. Furthermore, there are no ''0'' patches. Patches are always numbered sequentially beginning with the number 1. You must follow this sequence for each firmware version.
- Because of the hierarchical patch structure, removing any patch also removes all higher numbered patches. For example, deleting patch number 2 also removes patches 3, 4, and so on.
- Controllers in dual-redundant configurations must have the same patches applied and patches must be entered into each controller separately.

7.3.11.6 Exit Option

Select this option to terminate the Code Patch program. Pressing Ctrl/Y at any time during the Code Patch program performs the same function.

List of Current Patches

The List Patches option allows you to display a listing of controller firmware versions, and the currently installed patches that apply to them.

The following is an example of the List Patches option:

```
CLI> RUN CLCP

 Select an option from the following list:

 Code Load & Code Patch local program Main Menu

        0: Exit
        1: Enter Code LOAD local program
        2: Enter Code PATCH local program

  Enter option number (0..2) [0] ? 2
-------------------------------------------------------------------

 You have selected the Code Patch local program.  This program is
 used to manage firmware code patches.  Select an option from the
 following list:

 Type ^Y or ^C (then RETURN) at any time to abort Code Patch.

 Code Patch Main Menu

       0: Exit
       1: Enter a Patch
       2: Delete Patches
       3: List Patches

  Enter option number (0..3) [0] ? 3

 The following patches are currently stored in the patch area:

   Firmware Version - Patch number(s)
         ______       _________
         123456  -      1
         XLZ6    -      2,1

 Currently, 91% of the patch area is free.

 Code Patch Main Menu

       0: Exit
       1: Enter a Patch
       2: Delete Patches
       3: List Patches

  Enter option number (0..3) [0] ?
```

Note

The SHOW THIS_CONTROLLER command also provides patch information in the form of a ‘‘dash number’’ following the firmware version. In the following example, firmware version 2.0 has had patches applied up to patch number 3:

```
CLI> SHOW THIS_CONTROLLER

Controller:
        HSZ40 ZG33400026 Firmware V020-3, Hardware 0000
        .
        .
        .
```

Deleting a Patch and a Firmware Version

The Delete Patches option allows you to remove previously installed patches from controller non-volatile memory. The program displays the currently installed patches and patches to be deleted.

The Code Patch option of the CLCP utility verifies that the patch requested for deletion exists, and that it is not a dependent patch for a higher numbered installed patch. It allows you to delete only one patch at a time. The program prompts with error messages if you attempt to perform an illegal patch deletion.

The following is an example of how to delete a patch and a firmware version that are no longer needed:

```
CLI> RUN CLCP

 Select an option from the following list:

 Code Load & Code Patch local program Main Menu

        0: Exit
        1: Enter Code LOAD local program
        2: Enter Code PATCH local program

  Enter option number (0..2) [0] ? 2
-------------------------------------------------------------------------

 You have selected the Code Patch local program.  This program is
 used to manage firmware code patches.  Select an option from the
 following list:

 Type ^Y or ^C (then RETURN) at any time to abort Code Patch.

 Code Patch Main Menu

       0: Exit
       1: Enter a Patch
       2: Delete Patches
       3: List Patches

  Enter option number (0..3) [0] ? 2

 This is the Delete Patches option.  The program prompts you
 for the firmware version and patch number you wish to delete.
 If you select a patch for deletion that is required for another patch,
 all dependent patches are also selected for deletion.  The
 program lists your deletion selections and asks if you wish to continue.

 Type ^Y or ^C (then RETURN) at any time to abort Code Patch.

 The following patches are currently stored in the patch area:

   Firmware Version - Patch number(s)
         ______       _________
         123456  -      1
         XLZ6    -      2,1

 Currently, 91% of the patch area is free.

 Firmware Version of patch to delete ? 123456
 Patch Number to delete ? 1

 The following patches have been selected for deletion:

  Firmware Version - Patch #
         ______       _________
         123456  -      1

 Do you wish to continue (y/n) [y] ? Y

 The patch you have just deleted is currently applied, but will
 not be applied when the controller is restarted.
```

```
Code Patch Main Menu

      0: Exit
      1: Enter a Patch
      2: Delete Patches
      3: List Patches

 Enter option number (0..3) [0] ? 3

The following patches are currently stored in the patch area:

  Firmware Version - Patch number(s)
      ______         _________
      XLZ6    -      2,1

Currently, 94% of the patch area is free.

Code Patch Main Menu

      0: Exit
      1: Enter a Patch
      2: Delete Patches
      3: List Patches

 Enter option number (0..3) [0] ?
```

If You Enter an Incorrect Firmware Version for Deletion

The following is an example of what happens if you enter an incorrect firmware version number:

```
CLI> RUN CLCP

 Select an option from the following list:

 Code Load & Code Patch local program Main Menu

       0: Exit
       1: Enter Code LOAD local program
       2: Enter Code PATCH local program

 Enter option number (0..2) [0] ? 2
-------------------------------------------------------------------------

 You have selected the Code Patch local program.  This program is
 used to manage firmware code patches.  Select an option from the
 following list:

 Type ^Y or ^C (then RETURN) at any time to abort Code Patch.

 Code Patch Main Menu

      0: Exit
      1: Enter a Patch
      2: Delete Patches
      3: List Patches

 Enter option number (0..3) [0] ? 2

 This is the Delete Patches option.  The program prompts you
 for the firmware version and patch number you wish to delete.  If
 you select a patch for deletion that is required for another patch,
 all dependent patches are also selected for deletion.  The
 program lists your deletion selections and asks if you wish to
 continue.

 Type ^Y or ^C (then RETURN) at any time to abort Code Patch.

 The following patches are currently stored in the patch area:

   Firmware Version - Patch number(s)
      ______         _________
      XLZ6    -      2,1
```

```
Currently, 94% of the patch area is free.

Firmware Version of patch to delete ? asdf

Firmware Version ASDF   does not have any patches to delete

Code Patch Main Menu

      0: Exit
      1: Enter a Patch
      2: Delete Patches
      3: List Patches

 Enter option number (0..3) [0] ?
```

Entering a Nonexistent Patch Number for Deletion

The following is an example of what happens when you enter a patch number that does not exist for the firmware version listed:

```
CLI> RUN CLCP

 Select an option from the following list:

 Code Load & Code Patch local program Main Menu

       0: Exit
       1: Enter Code LOAD local program
       2: Enter Code PATCH local program

 Enter option number (0..2) [0] ? 2
-------------------------------------------------------------------------

 You have selected the Code Patch local program.  This program is
 used to manage firmware code patches.  Select an option from the
 following list:

 Type ^Y or ^C (then RETURN) at any time to abort Code Patch.

 Code Patch Main Menu

      0: Exit
      1: Enter a Patch
      2: Delete Patches
      3: List Patches

 Enter option number (0..3) [0] ? 2

 This is the Delete Patches option.  The program prompts you
 for the firmware version and patch number you wish to delete.  If
 you select a patch for deletion that is required for another patch,
 all dependent patches are also selected for deletion.  The
 program lists your deletion selections and asks if you wish to
 continue.

 Type ^Y or ^C (then RETURN) at any time to abort Code Patch.

 The following patches are currently stored in the patch area:

   Firmware Version - Patch number(s)

       ______       _________
       XLZ6    -      2,1

 Currently, 94% of the patch area is free.

 Firmware Version of patch to delete ? XLZ6
 Patch Number to delete ? 5

 Firmware Version XLZ6   does not have patch number 5 to delete.

 Code Patch Main Menu
```

```
      0: Exit
      1: Enter a Patch
      2: Delete Patches
      3: List Patches

 Enter option number (0..3) [0] ?
```

Attempting to Enter a Patch Number That Already Exists

The following is an example of what happens when you enter a patch number that is already loaded for the specified firmware version:

```
CLI> RUN CLCP

 Select an option from the following list:

 Code Load & Code Patch local program Main Menu

       0: Exit
       1: Enter Code LOAD local program
       2: Enter Code PATCH local program

 Enter option number (0..2) [0] ? 2
-------------------------------------------------------------------------

 You have selected the Code Patch local program.  This program is
 used to manage firmware code patches.  Select an option from the
 following list:

 Type ^Y or ^C (then RETURN) at any time to abort Code Patch.

 Code Patch Main Menu

      0: Exit
      1: Enter a Patch
      2: Delete Patches
      3: List Patches

 Enter option number (0..3) [0] ? 1

 This is the Enter a Patch option.  The program prompts you
 for the patch information, one line at time.  Be careful
 to enter the information exactly as it appears on the patch
 release.  Patches may be installed for any version of firmware;
 however, patches entered for firmware versions other than XLZ6
 are not applied until the matching version of firmware is
 installed.

 To enter any patch, you must first install all patches with
 lower patch numbers than the patch you are entering, beginning
 with patch number 1, for the specific firmware version.
 If you incorrectly enter the patch information, you are given the
 option to review the patch one line at a time.

 Type ^Y or ^C (then RETURN) at any time to abort Code Patch.

 Do you wish to continue (y/n) [y] ? Y

 Version:      ? xlz6
 Length:       ? 10
 Patch Type:   ? 0
 Patch Number: ? 2

The patch you entered is already installed on this controller.
If you wish to reinstall patch number 2 for firmware version XLZ6 ,
use the Delete Patches option from the Code Patch Main Menu.

 Code Patch Main Menu

      0: Exit
      1: Enter a Patch
      2: Delete Patches
      3: List Patches
```

```
 Enter option number (0..3) [0] ?
```

Attempting to Enter a Patch When Dependent Patches Are Not Present

The following is an example of what happens when you try to enter a patch for a firmware version, and dependent (lower numbered) patches have not been previously installed:

```
CLI> RUN CLCP

 Select an option from the following list:

 Code Load & Code Patch local program Main Menu

        0: Exit
        1: Enter Code LOAD local program
        2: Enter Code PATCH local program

  Enter option number (0..2) [0] ? 2
-------------------------------------------------------------------------

 You have selected the Code Patch local program.  This program is
 used to manage firmware code patches.  Select an option from the
 following list:

 Type ^Y or ^C (then RETURN) at any time to abort Code Patch.

 Code Patch Main Menu

       0: Exit
       1: Enter a Patch
       2: Delete Patches
       3: List Patches

  Enter option number (0..3) [0] ? 1

 This is the Enter a Patch option.  The program prompts you
 for the patch information one line at time.  Be careful
 to enter the information exactly as it appears on the patch release.
 Patches may be installed for any version of firmware; however,
 patches entered for firmware versions other than XLZ6  are not
 applied until the matching version of firmware is installed.

 To enter any patch, you must first install all patches with
 lower patch numbers, beginning with patch number 1, for the
 specific firmware version. If you incorrectly enter the patch
 information, you are given the option to review the
 patch one line at a time.

 Type ^Y or ^C (then RETURN) at any time to abort Code Patch.

 Do you wish to continue (y/n) [y] ? Y

 Version:      ? XLZ6
 Length:       ? 10
 Patch Type:   ? 0
 Patch Number: ? 3

The patch you are entering requires other patches to be entered.
Please enter all patches for firmware version XLZ6   with patch
numbers between 3 and 1, then enter this patch.
```

Attempting to Enter a Patch That Belongs to Another Firmware Version

The following is an example of what happens if you try to enter a patch that does not belong with the firmware version that is currently loaded on your controller. The example shows what happens if you need to make a correction:

```
CLI> RUN CLCP

 Select an option from the following list:

 Code Load & Code Patch local program Main Menu

        0: Exit
        1: Enter Code LOAD local program
        2: Enter Code PATCH local program

  Enter option number (0..2) [0] ? 2
-------------------------------------------------------------------------

 You have selected the Code Patch local program.  This program is
 used to manage firmware code patches.  Select an option from the
 following list:

 Type ^Y or ^C (then RETURN) at any time to abort Code Patch.

 Code Patch Main Menu

       0: Exit
       1: Enter a Patch
       2: Delete Patches
       3: List Patches

  Enter option number (0..3) [0] ? 1

 This is the Enter a Patch option.  The program prompts you
 for the patch information one line at time.  Be careful
 to enter the information exactly as it appears on the patch release.
 Patches may be installed for any version of firmware; however,
 patches entered for firmware versions other than XLZ6   are not
 applied until the matching version of firmware is installed.  To enter
 any patch, you must first install all patches with lower patch
 numbers, beginning with patch number 1, for a specific firmware version.
 If you incorrectly enter the the patch information, you are given
 the option to review the patch one line at a time.


 Type ^Y or ^C (then RETURN) at any time to abort Code Patch.

 Do you wish to continue (y/n) [y] ? Y

 Version:      ? v15j

 WARNING
 The patch you are entering is not for the current firmware
 version (XLZ6  ).  The patch you are entering is for firmware
 version V15J  .

 This patch will NOT be applied to the current firmware.

 Length:       ? 10
 Patch Type:   ? 0
 Patch Number: ? 1

 Count:        ? 1
 Address:      ? 99
 Value[  0]    ? 0

 Count:        ? 0

 Verification: ? 39d6c0bb

 You incorrectly entered the patch information.  The
 program prompts you for each line of the patch entry, with the
 default from your previous response.  Please verify that each
 entry is exactly the same as the patch release.  If you choose
 not to continue, or if you abort during this review procedure,
 the patch information you entered is lost and you must
 reenter the entire patch again.

 Do you wish to continue (y/n) [y] ? Y
```

```
Type ^Y or ^C (then RETURN) at any time to abort Code Patch.
Type ^Z (then RETURN) at any prompt to choose the default for
the remaining questions.

Version:      [V15J  ]?

WARNING
The patch you are entering is not for the current firmware
version (XLZ6  ).  The patch you are entering is for firmware
version V15J  .

This patch will NOT be applied to the current firmware.

Length:       [10]?
Patch Type:   [0]?
Patch Number: [1]?

Count:        [1]?
Address:      [00000099]?
Value[  0]    [00000000]? 1

Count:        [0]?

Verification: [39D6C0BB]?

The patch you have just entered is not applied until
the controller firmware is changed to Version XLZ6  .

Code Patch Main Menu

      0: Exit
      1: Enter a Patch
      2: Delete Patches
      3: List Patches

 Enter option number (0..3) [0] ?
```

Specifying a Correct Patch Number for Deletion

The following is an example of what happens when you specify the correct patch number for your firmware version.

```
CLI> RUN CLCP

 Select an option from the following list:

 Code Load & Code Patch local program Main Menu

       0: Exit
       1: Enter Code LOAD local program
       2: Enter Code PATCH local program

 Enter option number (0..2) [0] ? 2
-------------------------------------------------------------------

 You have selected the Code Patch local program.  This program is
 used to manage firmware code patches.  Select an option from the
 following list:

 Type ^Y or ^C (then RETURN) at any time to abort Code Patch.

 Code Patch Main Menu

      0: Exit
      1: Enter a Patch
      2: Delete Patches
      3: List Patches

 Enter option number (0..3) [0] ? 2
```

```
This is the Delete Patches option.  The program prompts you
for the firmware version and patch number for deletion.  If
you select a patch for deletion that is required for another patch,
all dependent patches are also selected for deletion.  The
program lists your deletion selections and asks if you wish to
continue.

Type ^Y or ^C (then RETURN) at any time to abort Code Patch.

The following patches are currently stored in the patch area:

  Firmware Version - Patch number(s)

       ______      _________
       XLZ6    -      2,1
       V15J    -      1

Currently, 91% of the patch area is free.

Firmware Version of patch to delete ? XLZ6
Patch Number to delete ? 1

You have requested deletion of a patch number that another
patch requires.

You selected the following patches for deletion:

 Firmware Version - Patch #

       ______      _________
       XLZ6    -      1
       XLZ6    -      2

Do you wish to continue (y/n) [y] ? Y

The patch you just deleted is currently applied, but will
not be applied when the controller is restarted.

Code Patch Main Menu

      0: Exit
      1: Enter a Patch
      2: Delete Patches
      3: List Patches

 Enter option number (0..3) [0] ?
```

Entering a Patch for Your Current Version of Firmware

The following is an example of entering a patch to the current firmware revision loaded on your controller:

```
CLI> RUN CLCP

 Select an option from the following list:

 Code Load & Code Patch local program Main Menu

       0: Exit
       1: Enter Code LOAD local program
       2: Enter Code PATCH local program

  Enter option number (0..2) [0] ? 2
-------------------------------------------------------------------------

 You have selected the Code Patch local program.  This program is
 used to manage firmware code patches.  Select an option from the
 following list:

 Type ^Y or ^C (then RETURN) at any time to abort Code Patch.

 Code Patch Main Menu
```

```
      0: Exit
      1: Enter a Patch
      2: Delete Patches
      3: List Patches

 Enter option number (0..3) [0] ? 1

This is the Enter a Patch option.  The program prompts you
for the patch information, one line at time.  Be careful
to enter the information exactly as it appears on the patch release.
Patches may be installed for any version of firmware; however,
patches entered for firmware versions other than XLZ6   are not
applied until the matching version of firmware is installed.

To enter any patch, you must first install all patches with lower patch
numbers, beginning with patch number 1, for the specific firmware version.
If you incorrectly enter the patch information, you are given
the option to review the patch one line at a time.

Type ^Y or ^C (then RETURN) at any time to abort Code Patch.

Do you wish to continue (y/n) [y] ? Y

Version:      ? XLZ6
Length:       ? 10
Patch Type:   ? 0
Patch Number: ? 1

Count:        ? 1
Address:      ? 10
Value[  0]    ? 0
Count:        ? 0

Verification: ? b2103761

The patch you just entered is not applied until
the controller is restarted.


Code Patch Main Menu

      0: Exit
      1: Enter a Patch
      2: Delete Patches
      3: List Patches

 Enter option number (0..3) [0] ?


 CLCP - Normal Termination
 Restart of the controller required to apply new patch

 CLI>
```

7.3.12 CLONE Utility

CLONE is a utility that partially automates the process of using the mirroring facility to create a snapshot copy of host unit data.

Using the mirroring facility to create a snapshot copy of host unit data is a multistep process described in Section 6.10. If your data snapshot needs are straightforward, CLONE can be used to relieve you of much of the chore of performing this common operation. Note, however, that CLONE does nothing that cannot be achieved by issuing the appropriate CLI commands yourself; in fact, CLONE operates by issuing CLI commands for you. These commands are printed on the terminal as part of the program output so that you can see what it has done. This is useful both as a learning tool, and in the event that you need to recover an incomplete snapshot operation manually.

Although the operations involved in most data snapshot processes are commonplace, the reaction in response to failures during the operation is heavily influenced by each installation's operational needs. For this reason, CLONE does not attempt to automate the error recovery process. If you encounter an error during a CLONE operation, you will need to resolve the situation by manually issuing the appropriate CLI commands.

The following circumstance will cause CLONE to cease operation:

1. If the controller is reset or there is a power loss.
2. If the host moves the unit being copied from one controller to the other.
3. If you change the configuration of the unit while CLONE is running.
4. If a disk device being used by CLONE fails.
5. If the CLONE utility is aborted via ^Y or ^C.
6. If the controller fails.

In most cases, CLONE can automate the operation entirely, and will complete successfully without intervention. In those cases where it cannot complete, it stops at the point the error occured. The CLI operations performed so far have been output and are displayed on your terminal screen.

Recovering partially completed CLONE operations requires you to be familiar with the data snapshot process as described in Section 6.10.1. The recovery strategy is to decide what follow-on operations will best meet your operational needs. You can continue the data snapshot operation to completion by manually issuing the remaining commands in the sequence. You can undo the actions CLONE has taken by issuing appropriate CLI commands to reverse them. Alternatively, you can decide that some entirely different course of action is appropriate, and issue the appropriate CLI commands to proceed in that direction.

Each of the four CLONE examples that follow contain a detailed discussion of the typical sequence of operations that CLONE will perform for each of the legal target configurations. If a CLONE operation does not complete, use these template sequences and your knowledge of data snapshot operations in general to guide a manual recovery session.

Any unit created by CLONE has a mirrorset level in the configuration heirarchy, even if the original unit did not have mirroring. The CLONE utility uses mirrorsets during copying and must maintain that structure when it adds the cloned disk as a newly-created unit. The steps below illustrate this concept:

1. CLONE is run on a single-disk unit.
2. CLONE creates a mirrorset from the single disk and adds the target disk to the mirrorset. The target disk is initialized *as a member of a mirrorset* when it is added.
3. The data on the first member of the mirrorset is copied to the new (target) member.
4. When the copy is complete, CLONE removes the target drive from the mirrorset, and then sets the original disk so that it is no longer a mirrorset.
5. Because the target disk was initialized as a mirrorset member, CLONE makes it into a single-member mirrorset to preserve the metadata before adding it as a unit.

The new mirrorset level only affects clones of single-disk units and stripesets. Mirrorsets and striped mirrorsets already use mirroring, and any clones from such units will have the same structure as the original units.

The following are examples for cloning a single device unit, cloning a stripeset, cloning a mirrorset, and finally, cloning a striped mirrorset.

Example 7–10 Cloning a Single Device Unit

```
CLI> RUN CLONE

Clone Local Program Invoked
Units available for cloning:
 110
 799
Enter unit to clone ? 110

Clone will create a new unit which is a copy of unit 110.
Enter the unit number which you want assigned to the new unit ? 797
The new unit may be added using one of the following methods:
  1. Clone will pause after all members have been copied. The user must
     then press RETURN to cause the new unit to be added.
  2. After all members have been copied, the unit will be added automatically.
Under which above method should the new unit be added [] ? 1
Devices available for clone targets:
  DISK300 (size=2050353)
  DISK330 (size=2050353)
Use available device DISK300(size=2050353) for
member DISK110(size=2050353) (y,n) [y] ? y
       mirror DISK110 C_M
       set C_M nopolicy
       set C_M members=2
       set C_M replace=DISK300
Copy in progress for each new member. Please be patient...
  copy from DISK110 to DISK300 is 6% complete
  copy from DISK110 to DISK300 is 12% complete
  copy from DISK110 to DISK300 is 19% complete
   .
   .
   .
  copy from DISK110 to DISK300 is 98% complete
  copy from DISK110 to DISK300 is 100% complete

Press RETURN when you want the new unit to be created
       reduce  DISK300
       unmirror DISK110
       add mirrorset C_M        DISK300
       init C_M       nodestroy
       add unit D797 C_M

D797 has been created. It is a clone of D110.

Clone - Normal Termination

HSJ>
```

The following is the list of commands (in sequential order) you would use if you need to manually clone the single device unit from Example 7–10:

1. SHOW DEVICES
2. SHOW STORAGESETS
3. MIRROR *disk-device-name1 container-name*
4. SET *mirrorset-container-name* POLICY= *policy-type*

5. SET *mirrorset-container-name* MEMBERSHIP= *number-of-members*
6. SET *mirrorset-container-name* REPLACE= *disk-device-name*

   Wait for member NORMALIZATION
7. REDUCE *disk-device-name*
8. UNMIRROR *disk-device-name*
9. ADD MIRRORSET *mirrorset-container-name disk-device-name*
10. INITIALIZE *container-name* NODESTROY
11. ADD UNIT *unit-number container-name*

The following is an example of the specific manual commands used to clone the single device unit from Example 7–10:

```
HSJ> SHOW DEVICES ❶
HSJ> SHOW STORAGESETS ❷
HSJ> MIRROR DISK110 C_M ❸
HSJ> SET C_M NOPOLICY ❹
HSJ> SET C_M MEMBERSHIP=2 ❺
HSJ> SET C_M REPLACE=DISK300 ❻
HSJ> REDUCE DISK300 ❼
HSJ> UNMIRROR DISK110 ❽
HSJ> ADD MIRRORSET C_M DISK300 ❾
HSJ> INITIALIZE C_M NODESTROY ❿
HSJ> ADD UNIT D797 C_M ⓫
```

❶ Displays the units available for cloning.

❷ Displays the storagesets which are currently configured.

❸ Converts the physical device DISK110 into a one member mirrorset and names the mirrorset C_M.

❹ Sets the replacement policy for mirrorset C_M to NOPOLICY so that spareset members are not automatically added to the mirrorset.

❺ Sets the nominal membership of mirrorset C_M to two members.

❻ Places disk DISK300 into mirrorset C_M. The controller automatically starts copying data from the original member to the new member.

❼ Removes DISK300 from mirrorset C_M, after a copy from the existing mirrorset member to DISK300 has completed.

❽ Converts the one member mirrorset DISK110 back to a physical device.

❾ Creates a one-member mirrorset from DISK300 and names the mirrorset C_M.

❿ Initializes mirrorset C_M, but does not destroy any of the forced error metadata on the disk.

⓫ Creates a logical unit to the controller from the initialized mirrorset C_M and names the unit D797.

Example 7–11 Cloning a Stripeset

```
HSJ> SHOW STORAGESETS
Name          Storageset                    Uses             Used by
------------------------------------------------------------------------------

ST1           stripeset                     DISK130          D799
                                            DISK200
HSJ> run clone

Clone Local Program Invoked
Units available for cloning:
 110
 799
Enter unit to clone ? 799
Clone will create a new unit which is a copy of unit 799.
Enter the unit number which you want assigned to the new unit ? 798
The new unit may be added using one of the following methods:
  1. Clone will pause after all members have been copied. The user must
     then press RETURN to cause the new unit to be added.
  2. After all members have been copied, the unit will be added automatically.
Under which above method should the new unit be added [] ? 1
Devices available for clone targets:
  DISK220 (size=832317)
  DISK240 (size=832317)
  DISK310 (size=832317)
Use available device DISK220(size=832317) for
member DISK130(size=832317) (y,n) [y] ? y
        mirror DISK130 C_MA
        set C_MA nopolicy
        set C_MA members=2
        set C_MA replace=DISK220
Devices available for clone targets:
  DISK240 (size=832317)
  DISK310 (size=832317)
Use available device DISK240(size=832317) for
member DISK200(size=832317) (y,n) [y] ? y
        mirror DISK200 C_MB
        set C_MB nopolicy
        set C_MB members=2
        set C_MB replace=DISK240
Copy in progress for each new member. Please be patient...
  copy from DISK130 to DISK220 is 15% complete
  copy from DISK200 to DISK240 is 11% complete
  copy from DISK130 to DISK220 is 27% complete
  copy from DISK200 to DISK240 is 23% complete
   .
   .
   .
  copy from DISK130 to DISK220 is 100% complete
  copy from DISK200 to DISK240 is 100% complete

Press RETURN when you want the new unit to be created
        reduce  DISK220 DISK240
        unmirror DISK130
        unmirror DISK200
        add mirrorset C_MA       DISK220
        add mirrorset C_MB       DISK240
        add stripeset C_ST1  C_MA C_MB
        init C_ST1     nodestroy chunk=128
        add unit D798 C_ST1

D798 has been created. It is a clone of D799.
```

(continued on next page)

Example 7–11 (Cont.) Cloning a Stripeset

```
Clone - Normal Termination

HSJ> SHOW DEVICES

Name          Type          Port Targ  Lun                    Used by
------------------------------------------------------------------------------

DISK130       disk             1    3    0                    ST1
DISK200       disk             2    0    0                    ST1
DISK220       disk             2    2    0                    C_MA
DISK240       disk             2    4    0                    C_MB
DISK310       disk             3    1    0

HSJ> SHOW STRIPESETS

Name          Storageset                    Uses             Used by
------------------------------------------------------------------------------

C_ST1         stripeset                     C_MA             D798
                                            C_MB

ST1           stripeset                     DISK130          D799
                                            DISK200

HSJ>
```

To manually clone a stripeset use the following commands in sequential order:

1. SHOW DEVICES
2. SHOW UNITS
3. MIRROR *disk-device-name1 container-name1*
4. SET *mirrorset-container-name1* NOPOLICY
5. SET *mirrorset-container-name1* MEMBERSHIP=
6. SET *mirrorset-container-name1* REPLACE=
7. MIRROR *disk-device-name2 mirrorset-container-name2*
8. SET *mirrorset-container-name2* NOPOLICY
9. SET *mirrorset-container-name2* MEMBERSHIP=
10. SET *mirrorset-container-name2* REPLACE=

    Wait for NORMALIZATION of *all* new mirrorset members.
11. REDUCE *disk-device-name disk-device-name[N]*
12. UNMIRROR *disk-device-name*
13. UNMIRROR *disk-device-name*
14. ADD MIRRORSET *mirrorset-container-name1 disk-device-name*
15. ADD MIRRORSET *mirrorset-container-name2 disk-device-name*
16. ADD STRIPESET *stripeset-container-name mirrorset-container-name1 mirrorset-container-name2*
17. INITIALIZE *stripeset-container-name* NODESTROY CHUNK=
18. ADD UNIT *unit-name stripeset-container-name*

The following is an example of the manual commands for cloning a stripeset:

```
HSJ> SHOW DEVICES ❶
HSJ> SHOW STORAGESETS ❷
HSJ> MIRROR DISK130 C_MA ❸
HSJ> SET C_MA NOPOLICY ❹
HSJ> SET C_MA MEMBERSHIP=2 ❺
HSJ> SET C_MA REPLACE=DISK220 ❻
HSJ> MIRROR DISK200 C_MB ❼
HSJ> SET C_MB NOPOLICY ❽
HSJ> SET C_MB MEMBERSHIP=2 ❾
HSJ> SET C_MB REPLACE=DISK240 ❿
...wait for NORMALIZATION OF DISK220 and DISK240...
HSJ> REDUCE DISK220 DISK240 ⓫
HSJ> UNMIRROR DISK130 ⓬
HSJ> UNMIRROR DISK200 ⓭
HSJ> ADD MIRRORSET C_MA DISK220 ⓮
HSJ> ADD MIRRORSET C_MB DISK240 ⓯
HSJ> ADD STRIPESET C_ST1 C_MA C_MB ⓰
HSJ> INITIALIZE C_ST1 NODESTROY CHUNK=128 ⓱
HSJ> ADD UNIT D798 C_ST1 ⓲
HSJ> SHOW DEVICES ⓳
HSJ> SHOW STRIPESETS ⓴
```

❶ Displays the units available for cloning.

❷ Displays the storagesets which are currently configured.

❸ Converts the physical device DISK130 into a one member mirrorset and names the mirrorset C_MA.

❹ Sets the replacement policy for mirrorset C_MA to NOPOLICY so that spareset members are not automatically added to the mirrorset

❺ Sets the nominal membership of mirrorset C_MA to two members.

❻ Places disk DISK220 into mirrorset C_MA. The controller automatically starts copying data from the original member to the new member.

❼ Converts the physical device DISK200 into a one member mirrorset and names the mirrorset C_MB.

❽ Sets the replacement policy for mirrorset C_MB to NOPOLICY so that spareset members are not automatically added to the mirrorset.

❾ Sets the nominal membership of mirrorset C_MB to two members.

❿ Places disk DISK240 into mirrorset C_MB. The controller automatically starts copying data from the original member to the new member.

⓫ Removes DISK220 and DISK240 from their respective mirrorsets, after the copy operations from the existing mirrorset members has completed.

⓬ Converts the one member mirrorset DISK130 back to a physical device.

⓭ Converts the one member mirrorset DISK200 back to a physical device.

⓮ Creates a one-member mirrorset from DISK220 and names the mirrorset C_MA.

⓯ Creates a one-member mirrorset from DISK240 and names the mirrorset C_MB.

⑯ Creates a stripeset called C_ST1 from the two newly-created mirrorsets C_MA and C_MB.

⑰ Initializes stripeset C_ST1 with a chunksize of 128 blocks, but does not write new metadata onto the members.

⑱ Creates a logical unit for the host from the initialized stripeset C_ST1 and names the unit D798.

⑲ Shows the device configuration after the clone is complete.

⑳ Shows the stripesets after the clone is complete.

Example 7–12 Cloning a Mirrorset

```
HSJ> SHOW DEVICES
Name          Type          Port Targ  Lun                    Used by
------------------------------------------------------------------------------

DISK110       disk             1    1    0                    M1
DISK150       disk             1    5    0
DISK220       disk             2    2    0                    M1
DISK310       disk             3    1    0
DISK350       disk             3    5    0
DISK420       disk             4    2    0
DISK510       disk             5    1    0
DISK550       disk             5    5    0
DISK620       disk             6    2    0

HSJ>

HSJ> SHOW MIRRORSETS
Name          Storageset                    Uses             Used by
------------------------------------------------------------------------------

M1            mirrorset                     DISK110          D411
                                            DISK220
HSJ>

HSJ> RUN CLONE
```

(continued on next page)

Example 7–12 (Cont.) Cloning a Mirrorset

```
Clone Local Program Invoked
Units available for cloning:
 411
Enter unit to clone ?411
Enter the unit number which you want assigned to the new unit?499
The new unit may be added using one of the following methods:
  1. Clone will stall after all members have been copied. The user must
     then hit RETURN to cause the new unit to be added.
  2. After all members have been copied, the unit will be added automatically.
Under which above method should the new unit be added []?2
Devices available for clone targets:
  DISK150 (size=832317)
  DISK310 (size=832317)
  DISK350 (size=832317)
  DISK420 (size=832317)
  DISK510 (size=832317)
  DISK550 (size=832317)
  DISK620 (size=832317)
Use available device DISK150(size=832317) for
member DISK110(size=832317) (y,n) [y] ?N
Use available device DISK310(size=832317) for
member DISK110(size=832317) (y,n) [y] ?Y
        set M1 nopolicy
        set M1 members=3
        set M1 replace=DISK310
Copy in progress for each new member. Please be patient...
  copy from DISK110 to DISK310 is 5% complete
  copy from DISK110 to DISK310 is 10% complete
  .
  .
  .
  copy from DISK110 to DISK310 is 97% complete
  copy from DISK110 to DISK310 is 100% complete
        reduce DISK310
        add mirrorset C_M1       DISK310
        init C_M1      nodestroy
        add unit D499 C_M1

D499 has been created. It is a clone of D411.

Clone - Normal Termination

HSJ>

HSJ> SHOW DEVICES

Name          Type          Port Targ  Lun                    Used by
------------------------------------------------------------------------------

DISK110       disk             1    1    0                    M1
DISK150       disk             1    5    0
DISK220       disk             2    2    0                    M1
DISK310       disk             3    1    0                    C_M1
DISK350       disk             3    5    0
DISK420       disk             4    2    0
DISK510       disk             5    1    0
DISK550       disk             5    5    0
DISK620       disk             6    2    0

HSJ>

HSJ> SHOW MIRRORSETS
```

(continued on next page)

Example 7–12 (Cont.) Cloning a Mirrorset

```
Name          Storageset                    Uses             Used by
------------------------------------------------------------------------------

C_M1          mirrorset                     DISK310          D499
M1            mirrorset                     DISK110          D411
                                            DISK220

HSJ>
```

To manually clone a mirrorset use the following commands in sequential order:

1. SHOW DEVICES
2. SHOW MIRRORSETS
3. SET *mirrorset-container-name* NOPOLICY
4. SET *mirrorset-container-name* MEMBERSHIP=3
5. SET *mirrorset-container-name* REPLACE= *disk-device-name*
   Wait for NORMALIZATION.
6. REDUCE *disk-device-name*
7. ADD MIRRORSET *mirrorset-container-name disk-device-name*
8. INITIALIZE *mirrorset-container-name* NODESTROY CHUNK=
9. ADD UNIT *unit-name mirrorset-container-name*
10. SHOW DEVICES
11. SHOW MIRRORSETS

The following is an example of the commands for cloning a mirrorset:

```
HSJ> SHOW DEVICES ❶
HSJ> SHOW MIRRORSETS ❷
HSJ> SET M1 NOPOLICY ❸
HSJ> SET M1 MEMBERSHIP=3 ❹
HSJ> SET M1 REPLACE=DISK310 ❺
...wait for NORMALIZATION of M1...
HSJ> REDUCE DISK310 ❻
HSJ> ADD MIRRORSET C_M1 DISK310 ❼
HSJ> INITIALIZE C_M1  NODESTROY CHUNK=128 ❽
HSJ> ADD UNIT D499 C_M1 ❾
HSJ> SHOW DEVICES ❿
HSJ> SHOW MIRRORSETS ⓫
```

❶ Displays the units available for cloning.

❷ Displays the mirrorsets which are currently configured.

❸ Sets the replacement policy for mirrorset M1 to NOPOLICY so that spareset members are not automatically added to the mirrorset

❹ Sets the nominal membership of mirrorset M1 to three members.

❺ Places disk DISK310 into mirrorset M1. The controller automatically starts copying data to the new member to make it identical to the existing NORMAL members.

❻ Removes DISK310 from mirrorset M1 after the copy operation has completed.

❼ Creates a mirrorset called C_M1 from DISK310.

❽ Initializes mirrorset C_M1 with a chunksize of 128 blocks, but does not write new metadata onto the members.

❾ Creates a logical unit for the host from mirrorset C_M1 and names the unit D499.

❿ Shows the device configuration after the clone is complete.

⓫ Shows the mirrorsets after the clone is complete.

Example 7–13 Cloning a Striped Mirrorset

```
HSJ> SHOW DEVICES
Name          Type          Port Targ  Lun                    Used by
------------------------------------------------------------------------------

DISK110       disk             1    1    0                    M1
DISK150       disk             1    5    0
DISK220       disk             2    2    0                    M1
DISK310       disk             3    1    0                    M2
DISK350       disk             3    5    0
DISK420       disk             4    2    0                    M2
DISK510       disk             5    1    0                    M3
DISK550       disk             5    5    0
DISK620       disk             6    2    0                    M3

HSJ> SHOW MIRRORSETS
Name          Storageset                    Uses             Used by
------------------------------------------------------------------------------

M1            mirrorset                     DISK110          ST1
                                            DISK220

M2            mirrorset                     DISK310          ST1
                                            DISK420

M3            mirrorset                     DISK510          ST1
                                            DISK620

HSJ>

HSJ> SHOW STORAGESETS
Name          Storageset                    Uses             Used by
------------------------------------------------------------------------------

ST1           stripeset                     M1               D411
                                            M2
                                            M3
HSJ>

HSJ> RUN CLONE
```

(continued on next page)

Example 7–13 (Cont.) Cloning a Striped Mirrorset

```
Clone Local Program Invoked
Units available for cloning:
 411
Enter unit to clone ?411
Clone will create a new unit which is a copy of unit 411.
Enter the unit number which you want assigned to the new unit?499
The new unit may be added using one of the following methods:
  1. Clone will stall after all members have been copied. The user must
     then hit RETURN to cause the new unit to be added.
  2. After all members have been copied, the unit will be added automatically.
Under which above method should the new unit be added []?1
Devices available for clone targets:
  DISK150 (size=832317)
  DISK350 (size=832317)
  DISK550 (size=832317)
Use available device DISK150(size=832317) for
member DISK110(size=832317) (y,n) [y] ?N
Use available device DISK350(size=832317) for
member DISK110(size=832317) (y,n) [y] ?Y
        set M1 nopolicy
        set M1 members=3
        set M1 replace=DISK350
Devices available for clone targets:
  DISK150 (size=832317)
  DISK550 (size=832317)
Use available device DISK150(size=832317) for
member DISK310(size=832317) (y,n) [y] ?Y
        set M2 nopolicy
        set M2 members=3
        set M2 replace=DISK150
Devices available for clone targets:
  DISK550 (size=832317)
Use available device DISK550(size=832317) for
member DISK510(size=832317) (y,n) [y] ?Y
        set M3 nopolicy
        set M3 members=3
        set M3 replace=DISK550
Copy in progress for each new member. Please be patient...
  copy from DISK110 to DISK350 is 7% complete
  copy from DISK310 to DISK150 is 6% complete
  copy from DISK510 to DISK550 is 5% complete
  .
  .
  .
  copy from DISK110 to DISK350 is 100% complete
  copy from DISK310 to DISK150 is 100% complete
  copy from DISK510 to DISK550 is 100% complete

Hit RETURN when you want the new unit to be created
        reduce DISK350 DISK150 DISK550
        add mirrorset C_M1      DISK350
        add mirrorset C_M2      DISK150
        add mirrorset C_M3      DISK550
        add stripeset C_ST1     C_M1 C_M2 C_M3
        init C_ST1    nodestroy chunk=128
        add unit D499 C_ST1

D499 has been created. It is a clone of D411.

Clone - Normal Termination

HSJ>
```

(continued on next page)

Example 7–13 (Cont.) Cloning a Striped Mirrorset

```
HSJ> SHOW DEVICES
Name          Type          Port Targ  Lun                    Used by
-------------------------------------------------------------------------------

DISK110       disk             1    1    0                    M1
DISK150       disk             1    5    0                    C_M2
DISK220       disk             2    2    0                    M1
DISK310       disk             3    1    0                    M2
DISK350       disk             3    5    0                    C_M1
DISK420       disk             4    2    0                    M2
DISK510       disk             5    1    0                    M3
DISK550       disk             5    5    0                    C_M3
DISK620       disk             6    2    0                    M3

HSJ>

HSJ> SHOW MIRRORSETS
Name          Storageset                    Uses             Used by
-------------------------------------------------------------------------------

C_M           mirrorset                     DISK350          C_ST1

C_MA          mirrorset                     DISK150          C_ST1

C_MB          mirrorset                     DISK550          C_ST1

M1            mirrorset                     DISK110          ST1
                                            DISK220

M2            mirrorset                     DISK310          ST1
                                            DISK420

M3            mirrorset                     DISK510          ST1
                                            DISK620

HSJ>

HSJ> SHOW STORAGESETS
Name          Storageset                    Uses             Used by
-------------------------------------------------------------------------------

C_ST1         stripeset                     C_M1             D499
                                            C_M2
                                            C_M3

ST1           stripeset                     M1               D411
                                            M2
                                            M3
HSJ>
```

To manually clone a striped mirrorset use the following commands in sequential order:

1. SHOW DEVICES
2. SHOW MIRRORSETS
3. SHOW STORAGESETS
4. SET *mirrorset-container-name1* NOPOLICY
5. SET *mirrorset-container-name1* MEMBERSHIP=
6. SET *mirrorset-container-name1* REPLACE=
7. SET *mirrorset-container-name2* NOPOLICY
8. SET *mirrorset-container-name2* MEMBERSHIP=
9. SET *mirrorset-container-name2* REPLACE=
10. SET *mirrorset-container-name3* NOPOLICY
11. SET *mirrorset-container-name3* MEMBERSHIP=
12. SET *mirrorset-container-name3* REPLACE=

    Wait for NORMALIZATION of *all* new mirrorset members.

13. REDUCE *disk-device-name disk-device-name[N] disk-device-name [N]*
14. ADD MIRRORSET *mirrorset-container-name disk-device-name*
15. ADD MIRRORSET *mirrorset-container-name disk-device-name*
16. ADD MIRRORSET *mirrorset-container-name disk-device-name*
17. ADD STRIPESET *stripeset-name mirrorset-container-name1 mirrorset-container-name2 mirrorset-container-name3*
18. INITIALIZE *stripeset-name* NODESTROY CHUNK=
19. ADD UNIT *unit-name stripeset-name*
20. SHOW DEVICES
21. SHOW MIRRORSETS
22. SHOW STORAGESETS

The following is an example of the commands for cloning striped mirrorsets:

```
HSJ> SHOW DEVICES ❶
HSJ> SHOW MIRRORSETS ❷
HSJ> SHOW STORAGESETS ❸
HSJ> SET M1 NOPOLICY ❹
HSJ> SET M1 MEMBERSHIP=3 ❺
HSJ> SET M1 REPLACE=DISK350 ❻
HSJ> SET M2 NOPOLICY ❼
HSJ> SET M2 MEMBERSHIP=3 ❽
HSJ> SET M2 REPLACE=DISK150 ❾
HSJ> SET M3 NOPOLICY ❿
HSJ> SET M3 MEMBERSHIP=3 ⓫
HSJ> SET M3 REPLACE=DISK550 ⓬
...wait for NORMALIZATION of M1, M2, and M3...
```

```
HSJ> REDUCE DISK350 DISK150 DISK550 ⓭
HSJ> ADD MIRRORSET C_M1  DISK350 ⓮
HSJ> ADD MIRRORSET C_M2  DISK150 ⓯
HSJ> ADD MIRRORSET C_M3  DISK550 ⓰
HSJ> ADD STRIPESET C_ST1 C_M1 C_M2 C_M3 ⓱
HSJ> INITIALIZE C_ST1 NODESTROY ⓲
HSJ> ADD UNIT D499 C_ST1 ⓳
HSJ> SHOW DEVICES ⓴
HSJ> SHOW MIRRORSETS ㉑
HSJ> SHOW STORAGESETS ㉒
```

❶ Displays the devices available for cloning.

❷ Displays the configured mirrorsets.

❸ Displays the configured storagesets.

❹ Sets the replacement policy for mirrorset M1 to NOPOLICY so that spareset members are not automatically added to the mirrorset

❺ Sets the nominal membership of mirrorset M1 to three members.

❻ Places disk DISK350 into mirrorset M1. The controller automatically starts copying data from existing NORMAL members to the new member.

❼ Sets the replacement policy for mirrorset M2 to NOPOLICY so that spareset members are not automatically added to the mirrorset

❽ Sets the nominal membership of mirrorset M2 to three members.

❾ Places disk DISK150 into mirrorset M2. The controller automatically starts copying data from existing NORMAL members to the new member.

❿ Sets the replacement policy for mirrorset M3 to NOPOLICY so that spareset members are not automatically added to the mirrorset

⓫ Sets the nominal membership of mirrorset M3 to three members.

⓬ Places disk DISK550 into mirrorset M3. The controller automatically starts copying data from existing NORMAL members to the new member.

⓭ Removes DISK350, DISK150, and DISK550 from their respective mirrorsets, after the copy operations from the existing NORMAL mirrorset members has completed.

⓮ Creates new one-member mirrorset C_M1 that contains DISK350.

⓯ Creates new one-member mirrorset C_M2 that contains DISK150.

⓰ Creates new one-member mirrorset C_M3 that contains DISK550.

⓱ Creates a stripeset called C_ST1 from the three new mirrorsets C_M1, C_M2, and C_M3.

⓲ Initializes stripeset C_ST1 with a chunksize of 128 blocks, but does not write new metadata onto the members.

⓳ Creates a logical unit for the host from stripeset C_ST1 and names the unit D499.

⓴ Shows the device configuration after the clone is complete.

㉑ Shows the mirrorsets after the clone is complete.

㉒ Shows the storagesets after the clone is complete.

7.3.13 Command Disks (HSJ and HSD30 Array Controllers)

A special storage configuration is available for communication with generic SCSI devices. The concept centers around a virtual unit, called a **command disk**, that allows an MSCP-based host to control any physical SCSI device.

This feature uses the MSCP read and write operations as a transport for SCSI commands. In other words, the command disk will appear to the host as simply another disk behind the controller. However, the command disk resides entirely in approximately 10 KB of controller memory. The command disk exchanges SCSI commands, SCSI status, and data with the SCSI device. The setup is necessary in order for MSCP to transfer the SCSI information required when performing anything more than simple device reading or writing.

7.3.13.1 Uses for Command Disks

Although a command disk will allow you to perform a number of operations, including downloading of microcode into a SCSI device's processor memory, the example presented in this manual is that of a tape library.

A tape library contains standard tape devices plus a robotic mechanism for selecting and loading cartridges from a pool of tapes. (Such mechanisms are also known as ''jukebox'' style **loaders**, or medium changers.) The loader is a good application for a command disk because SCSI commands are needed to control the robotic movement within the device.

7.3.13.2 Creating a Command Disk

You must configure a command disk at the controller and the host level.

Note

If you have an HS array controller configuration without a cache module option, Digital recommends that you create no more than six command disks, to avoid degrading the performance of DILX with the Auto-Configure option.

7.3.13.3 Controller Setup

The following explains what you must do at the controller level to create a command disk for a loader. Note that you can only assign one SCSI device to each command disk.

Note

Starting with HSOF Version 2.5, **multiple LUNs** are supported under HSJ and HSD30 array controllers with selected tape loaders. Tape drives will use LUN 0 and the tape loaders use LUN 1.

1. Add the tape device serviced by the loader robot.
2. Add the tape device as a unit visible to the host.
3. Add the loader mechanism using its PTL location.

4. Add a **passthrough** container, the bridge between the physical loader and the virtual unit.
5. Add the passthrough container as a virtual unit visible to the host.

The following example shows the CLI commands necessary to add a tape library device to your configuration using a command disk. Note that the PTL addresses for devices in your storage subsystem will probably be different.

```
CLI> ADD TAPE320 3 2 0❶
CLI> ADD UNIT T322 TAPE320❷
CLI> ADD LOADER LDR321 3 2 1❸
CLI> ADD PASSTHROUGH PASS1 LDR321❹
CLI> ADD UNIT D332 LDR321❺
```

The commands in the example do the following:

❶ Adds the tape drive at PTL 3 2 0 to the list of known tape drives with the name TAPE320.

❷ Creates a host-visible unit called T322 that consists of TAPE320.

❸ Adds the tape laoder at PTL 3 2 1 to the list of known loaders with the name LDR321. Note that for this tape library device, both the drive from step 1 and the loader have the same Port and Target number; only the LUN is different.

❹ Creates a passthrough container (command disk) associated with LDR321 to allow the host direct access to the loader. The passthrough container is called PASS1.

❺ Creates a host-visible unit called D332 that consists of passthrough PASS1.

The host operating system will use *disk* unit 332 to exercise loader functions, and *tape* unit 332 for backups, and so forth.

7.3.13.4 Host Setup

To communicate with a loader through a command disk, you must have the following available at the host level:

- You must have special host-level application software for controlling the particular loader. The application software can vary and is not provided with the HS array controller or firmware. Simply stated, the application software will manage the command disk protocol to control the loader in conjunction with the drives served by it.
- You must install the OpenVMS operating system's JU driver. When you install JU driver, you must assign a JU device to the the correct unit number (the unit number established through the CLI when you created the command disk):

```
Beginning installation of JUDRIVER V1.4 at 15:54
   .
   .
   .
For each command disk on your system, enter the DU device designation.
Type CTRL/Z when there are no more command disks.
   .
   .
   .
* Enter the first DU device designation: $6$dua622❶
* Enter the next DU device or CTRL/Z if done:  Exit
%JUDRIVER-I-DEFINE, defining device JUA0❷
%JUDRIVER-I-LINK, Linking JUDRIVER ...
%JUDRIVER-I-LINK, Linking JUDRIVER_INIT ...
```

❶ In this case, the loader mechanism resides under unit number D622.

❷ The command disk will be linked to JU device ''JUA0.''

If you attempt to communicate with your command disk and the JU driver is not installed, you will receive the following message from the operating system:

```
%SYSTEM-W-NOSUCHDEV, no such device available
```

7.3.13.5 Communicating with a Command Disk

The OpenVMS-based host's DU driver recognizes command disks as normal disk devices. However, because the true purpose of command disks is to provide a conduit for passing raw SCSI command packets through to the underlying loader, communication operates as follows:

1. The host application that is the source of the SCSI commands issues command packets to the JU driver as though communicating with a native SCSI device.
2. The JU driver packages these SCSI commands using the command disk protocol, and queues them through the DU driver to the controller.
3. Controller firmware processes and issues the commands to the loader's SCSI bus, completing the illusion that the host is directly attached to the loader's bus.

7.3.13.6 Performance

Command disks are most useful for loaders and other low-speed or infrequent uses, and are not optimized for speed. Implementing significant drive data movement through a command disk is not recommended because multiple MSCP operations are necessary for each SCSI command. Large data movement through command disks would require partitioning into smaller transfers because it is undesirable to allocate large buffers for the amount of time typically required by command disk applications.

7.3.13.7 Maintenance

Because command disks are essentially conduits for host commands, there is no controller-based diagnostic, test, or error notification capability for a command disk. However, the host application should be able to easily test the integrity of the command path with its own echo testing, if necessary.

8

Operating System Support

8.1 Digital Supported Operating Systems

Operating system support for controllers includes the following two categories as detailed in the HS Operating Firmware Software Product Description (SPD) and HS Operating Firmware Release Notes:

- **Digital supported with limitations**:

  The controller and devices have been tested for proper and correct operation in conjunction with specific versions and configurations of systems and operating systems that preceded the introduction of the controller.

  The specific operating system version, CPU platform, and system configuration are documented in the controller SPD and/or release notes with one or more of the topics that follow. These should be verifiable from Digital Multivendor Customer Services and Customer Support Center (CSC) personnel.

  During product support activity, calls to the CSC and escalation to Digital Multivendor Customer Services should refer to this controller as a ''supported with limitations'' product to route the call to the appropriate technical support group as necessary.

- **Digital fully supported**:

  The controller is a fully supported system component for use with specific versions and configurations of systems and operating systems either preceding or following the introduction of the controller. Specifics are denoted in the SPD, firmware release notes, and subsequent addenda for each operating system. If the controller is ''fully supported,'' the controller is either:

  – Listed in the operating system documentation (for example, the operating system SPD, release notes, supported device list, or systems and options catalog).

    OR

  – Verifiable as ''fully supported'' from the Digital CSC, Digital Multivendor Customer Services, or other Digital support organizations.

To be a valid system configuration, a device *must* be supported (fully or with limitations) by the controller AND be supported (fully or with limitations) by the operating system. Thus, a device must be supported by BOTH the controller and the operating system to be valid device. Refer to both the controller SPD and the operating system SPD for device support specifics.

Other restrictions can apply to some operating systems when an HS array controller subsystem is installed. Refer to the HS array controller model-specific SPDs and firmware release notes for other restrictions.

8.2 HS Array Controller System Management

System management of the HS array controllers is meant to be done remotely over a VCS or DUP connection (or by using HSZterm for HSZ array controllers) with the exception of entering the vital controller parameters (controller ID and so forth). Only the vital controller parameters must be entered from a maintenance terminal connected directly to the maintenance terminal port at initial installation or when replacing a failed controller.

Table 8–1 lists the minimum operating support support for HSJ, HSD30, and HSZ array controllers.

Table 8–1 Minimum Operating System Support for HS Array Controllers

Operating System	HSJ30/40	HSD30	HSZ
OpenVMS Alpha	Version 1.5[1]	Version 1.5[1]	N/S[2]
OpenVMS VAX	Version 5.5–2[1]	Version 5.5–2	N/S[2]
VAX VMS	Version 5.5–1[1]	N/S[2]	N/S[2]
DEC OSF/1	N/S[2]	N/S[2]	Version 2.0

[1]Supported with limitations.

[2]Not supported at time of printing.

8.3 OpenVMS and VMS VAX Operating Systems

The following sections provide information pertinent to OpenVMS and VMS VAX operating systems.

Refer to the OpenVMS operating system documentation for operating system specific information. The OpenVMS operating system versions that support the controller are listed in the controller or operating system specific SPD and release notes.

8.3.1 CLI Access via DUP with OpenVMS Operating System

After initial configuration, you can access the CLI from a virtual terminal DUP connection (for HSJ and HSD30 array controllers). The method for establishing a virtual terminal connection varies depending on the operating system and interface type.

If you are entering commands from a host terminal, the following command line creates a virtual terminal connection (and a LOG file of your configuration parameters from your CLI session) to your controller's command line interpreter (CLI) from OpenVMS operating systems. At the VMS DCL prompt, enter the following command:

Note

You must have the DIAGNOSE privilege to use the following command.

```
$ SET HOST/DUP/SERVER=MSCP$DUP/TASK=CLI/LOG=CONFIGURATION.INFO HSxxx
```

Creating a LOG File

If you do not want to have a log file created, delete the /LOG= portion of the command. Substitute the name of the program you want to run after the /TASK= portion of the command, such as DILX if you want to run a test without going into the controller's CLI.

Using the /LOG= qualifier creates a log file of your CLI session when you create your HS array controller's configuration. You are instructed to log out of the session and print the file after the configuration is defined. Keep this file handy at all times. Each time you alter your controller's configuration using the CLI, ALWAYS use the /LOG= qualifier to maintain a record of configuration changes.

Note

When accessing the CLI from more than one source, CLI commands entered concurrently are handled by the firmware sequentially.

Refer to Appendix B for detailed descriptions of the CLI commands.

Loading the FYDRIVER for OpenVMS VAX

Creating a virtual terminal connection from a host terminal under the OpenVMS VAX operating system requires that the FYDRIVER be loaded. The following error indicates that the FYDRIVER has not been loaded:

```
%HSCPAD-F-DRVNOTLOAD, FYDRIVER not loaded
-SYSTEM-W-NOSUCHDEV, no such device available
```

If you receive the error message, load the OpenVMS VAX FYDRIVER as follows:

```
$ MCR SYSGEN
SYSGEN> CONNECT FYA0 /NOADAPTER
SYSGEN> EXIT
$
```

Once the driver is loaded, you may make the virtual terminal connection as described in this section.

VAXcluster Console System

You can attach a VCS to any HS array controller. If you are unfamiliar with VCS, refer to the VCS Software Manual for complete instructions.

8.3.2 OpenVMS VAX Support

Earlier Version OpenVMS Operating System Device Size Limitation

HS operating firmware (HSOF) (beginning with Version 1.4) supports up to 14 member RAID level 0 stripesets or RAID level 5 RAIDsets. However, OpenVMS VAX Version 5.5–2 (and earlier) operating system versions do not support disk device capacities larger than 16,777,216 blocks (about 8.5 GB) as file-structured devices. This must be considered when creating HS array controller storagesets for use with these OpenVMS operating system versions. Do not create storagesets above this limit, for example, do not create stripesets of more than two RZ74 disk drives because three RZ74 disk drives have a capacity of over 11 GB.

CAUTION

Exceeding the 8.5 GB limit can cause data corruption without prior warnings to the user.

Device Behavior After Controller Reinitialization

When a controller reinitialization occurs in a multiple host VAXcluster system, the hosts automatically reconnect to the devices attached to the controller. With OpenVMS operating system versions (both VAX and Alpha), these reconnections may be via another host. This behavior is not unique to the HSJ array controller and may be changed in a future version of the OpenVMS operating system.

Maximum Byte Count for ERASE Commands

As of HSOF Version 1.1, the HSOF enforces a maximum byte count corresponding to 4,194,303 blocks (about 2 gigabytes) for ERASE commands. OpenVMS facilities that rely on these commands automatically adjust to this behavior. This is only of concern for applications that issue these commands directly.

The following subsections are limitations and clarifications of the OpenVMS and VAX VMS operating system for HS array controller support.

8.3.2.1 HSJ and HSD30 Array Controller Disks as Initialization Devices

The HSJ and HSD30 array controllers have certain restrictions when used with specific systems. Those restrictions are described in the following sections.

VAX 7000 and VAX 10000 Systems

HSJ array controller operating firmware Version 1.1 and later supports manual and automatic initializing for VAX 7000/10000 systems. For a disk drive connected to an HSJ array controller to be both a VAX 7000/10000 manual *and* automatic initialize device, the following conditions must be met:

1. VAX 7000/10000 console code must be at Version 3.2 and include the ‘‘Single Path’’ patch. Later versions of the console code include the patch.
2. HSOF must be at Version 1.1 or greater for HSJ40 array controllers and Version 1.4 for HSJ30 array controllers.

Note

Contact your Digital Multivendor Customer Services representative if you need to upgrade your VAX 7000/10000 console code to Version 3.2 or greater.

Currently, HSD30 array controller-attached devices are not supported as manual or automatic boot devices.

If your VAX 7000/10000 console code version is earlier than Version 3.2, you are limited to manual initializing. To manually initialize your system, perform the following steps:

1. Ensure that the disk drives attached to the HSJ array controller are visible to the boot driver by entering the SHOW DEVICE command repeatedly (from the virtual console) until the disk drives attached to the HSJ array controller are reported (usually two repetitions are sufficient).
2. Enter the default initialize device string. (Refer to the VAX console instructions in the VAX console documentation.)
3. Enter the INITIALIZE command.

DEC 7000 and DEC 10000 Systems

Disks attached to HSJ array controllers may be used as initialization devices for DEC 7000 or DEC 10000 processors provided the following condition is met:

- DEC 7000 or DEC 10000 console code must be at Version 3.1 or higher.

Note

Currently, HSD30 array controllers are not supported under DEC 7000/10000 systems.

8.3.2.2 HSJ and HSD30 Array Controller-Attached Disk Drives and VMS AUTOGEN Program

The OpenVMS AUTOGEN.COM file must be edited for HSJ and HSD30 controller-attached disks to be recognized. If AUTOGEN is run without modification in a system that includes HSJ or HSD30 controller-attached disk drives, the following error may be displayed:

```
"** WARNING ** - unsupported system disk type. Using speed and
size characteristics of an RK07."
```

The AUTOGEN program does not recognize the device types of the HSJ or HSD30 array controller's attached devices. The OpenVMS DCL lexical F$GETDVI returns the following values:

OpenVMS VAX V6.0	VAX VMS V5.5-1
OpenVMS VAX V6.1	OpenVMS VAX V5.5-2
141 - HSX00	35 - unknown device
142 - HSX01	35 - unknown device

The AUTOGEN.COM DCL procedure must be modified to support these values.

For VAX VMS Version 5.5–1 and OpenVMS Version 5.5–2 operating systems, the AUTOGEN.COM DCL procedure selects a –1 (unsupported device) from the speed list. To circumvent this problem, perform the following steps:

1. Make a copy of the AUTOGEN.COM DCL file in case restoration of the original state is required.
2. The section of AUTOGEN.COM (from OpenVMS software Version 5.5–2) pertinent to devices is shown in the following example. Change one element in the speed list (the –1 shown enclosed in a box) to 4.

```
$ speed_list=" -1, 2, 2, 4, 4, 4, 4, 4, 4, 1, 1,-1,-1, 4,-1, 4,-1,-1, 1, 2"
$ speed_list=speed_list + ", 4, 4, 4, 2, 2, 1,-1, 1, 1, 2, 4, 1, 1,-1,-1, -1, -1,-1, 4, 4"
$ speed_list=speed_list + ", 1, 1, 1, 4, 4, 1, 4,-1, 4, 4, 4, 4,-1,-1, 4,-1, 4, 4,-1, 4"
$ speed_list=speed_list + ", 4, 4,-1,-1, 4, 4, 2,-1,-1,-1, 4,-1, 1,-1, 4, 4, 4, 4, 4, 4"
$ speed_list=speed_list + ", 4, 4, 4, 4,-1, 4, 4, 4, 4, 4, 4, 4, 4, 4, 4, 4, 4, 4, 4, 4"
$ speed_list=speed_list + ", 4, 4, 4, 4, 4, 4, 4, 4, 4, 4, 4, 4, 4, 4, 4, 4, 4, 4, 4, 4"
$ speed_list=speed_list + ", 4, 4, 4, 4, 4, 4, 4"
$ diskspeed=-1
$ temp = F$GETDVI("sys$sysdevice","DEVTYPE")
$ IF (temp .LE. 126) .AND. (temp .GE. 1) -
  THEN diskspeed = F$ELEMENT(temp,",",speed_list)
$ disksize = F$GETDVI("sys$sysdevice","MAXBLOCK")
$ IF diskspeed .NE. -1 THEN GOTO getdata30
```

3. Run the AUTOGEN program.

Completing this procedure causes HSJ or HSD30 controller-attached disk drives to be recognized as supported device types.

For the OpenVMS VAX Version 6.0 operating system, the AUTOGEN.COM DCL procedure does not support device types above 137 although HSX00 and HSX01 are properly defined in the speed list. To circumvent this problem, perform the following steps:

1. Make a copy of the AUTOGEN.COM DCL file in case restoration of the original state is required.
2. Edit the AUTOGEN.COM file. Change the value 137 in the following statement to 142.

```
$ IF  (temp  .LE.  137) .AND.  (temp .GE.  1) -
```

3. Run the AUTOGEN program.

This change allows AUTOGEN to run successfully against HSJ or HSD30 controller-attached disk drives to be used as system disks.

Note

OpenVMS VAX Version 6.1 or later software does not require modifications to the AUTOGEN.COM file.

8.3.3 Using the OpenVMS Preferred Path Utility

Attempt to use the OpenVMS Preferred Path utility to balance units between controllers for better performance in a dual-redundant controller configuration. Refer to the *VMS I/O User's Guide* for more information.

Note

The HSOF supports a controller-based preferred path feature for dual-redundant array controller configurations. Refer to Section 5.2.5.

8.3.4 SHOW DEVICE Command with OpenVMS

Note

This section pertains only to OpenVMS Version 5.5–1 and Version 5.5–2.

If a device is set as **NOTRANSPORTABLE**, the device type is not recognized using the SHOW DEVICE/FULL or SHOW DEVICE [VMS *unit_name*]/FULL command. The following is an example of the display shown for an unknown device:

Note

The SCS node name may be part of the device name.

```
$ SHOW DEVICE $3$DUA1/FULL

Disk $3$DUA1: (FRED), device type (type not yet identified), is online, file-
    oriented device, shareable, available to cluster, error logging is enabled.

    Error count                    0    Operations completed             50543
    Owner process                 ""    Owner UIC                        [0,0]
    Owner process ID        00000000    Dev Prot    S:RWED,O:RWED,G:RWED,W:RWED
    Reference count                0    Default buffer size                512
    Total blocks             6151059    Sectors per track                   57
    Total cylinders             2570    Tracks per cylinder                 42
    Host name                 "FRED"    Host type, avail              HSJ4, yes
    Allocation class               3
```

Note in the example that ''Host type'' indicates an HSJ4 (meaning HSJ40).

The following command line displays the name reported by the controller. In this example, HSX01 is the device name of 3DUA1. Use this command line to determine the controller's *REAL* device name even though VMS reports ''type not yet identified.''

```
$ WRITE SYS$OUTPUT F$GETDVI("$3$DUA1","media_name")

  HSX01
```

Refer to the *StorageWorks HS Array Controller Operating Firmware Release Notes* for further information.

8.3.5 Using the CLUSTER_SIZE Qualifier for Large Devices or Storagesets with OpenVMS Systems

Digital recommends that the formula displayed by the OpenVMS operating system HELP DEVICE INIT/CLUSTER_SIZE command be used to determine the proper OpenVMS file system cluster size. Using too small of a file system cluster size may prevent some of the device or storageset capacity from being accessed; too large of a cluster size usually wastes storage capacity by allocating large blocks of storage for small files.

8.3.5.1 VAX VMS Version 5.5–1 (and earlier)

If you are using OpenVMS VAX Version 5.5–1 software or earlier, and you are attempting to initialize a device using the DCL INITIALIZE command (or the DCL BACKUP/IMAGE command), you will receive the following error message:

Note

The INITIALIZE command may incorrectly set the cluster size.

```
$ INITIALIZE  device-name

"unfavorable cluster size"
```

This message can be circumvented by using the /CLUSTER_SIZE=*n* qualifier. The recommended value of *n* can be determined by using the following formula:

```
$ INITIALIZE/CLUSTER_SIZE=number-of-blocks device-name
```

The maximum size you can specify for a volume is one-hundredth the size of the volume; the minimum size you can specify is calculated with the following formula:

$$\frac{\text{disk\_size (number\_of\_blocks)}}{255*4096}$$

For Files–11 On-Disk Structure Level 2 disks, the cluster size default depends on the disk capacity; disks that are 50,000 blocks or larger have a default cluster size of 3, those smaller than 50,000 blocks have a default value of 1.

When using the BACKUP/IMAGE command, use the following steps:

1. Enter the INITIALIZE/CLUSTER_SIZE=*number-of-blocks device-name* command
2. Enter the BACKUP/IMAGE/NOINITIALIZE command

For further details, refer to OpenVMS VAX operating system software release notes and other OpenVMS VAX documentation.

8.3.5.2 OpenVMS VAX V5.5–2 (and above)

The ‘‘unfavorable cluster size’’ error message does not occur with OpenVMS VAX Versions 5.5–2 software or higher.

8.3.6 Shadow Set Operation with OpenVMS Systems

Timeout Value

For OpenVMS VAX operating system versions earlier than Version 6.0, timed-out I/O requests to shadow set members can lead to member disks attached to HSJ40 array controllers being dropped from shadow sets. In some cases, this can lead to host crashes. To avoid this possibility, Digital strongly recommends changing the value of the SYSGEN parameter SHADOW_MBR_TMO to at least 120 (seconds) for systems running operating system Version 6.0 and earlier. Version 6.1 of OpenVMS (and later) avoids this problem by retrying timed-out operations to shadow set members several times.

Shadow Set Members

Each physical device used in a OpenVMS operating system host-based shadow set must be the same physical device type (for example, any of the controller supported disk devices such as RZ25, RZ26, or RZ74 disk drives).

Note

You may not use transportable units as shadow set members.

A shadow set made of two or three RZ26 disk drives on one (or more) HSJ40 array controllers is valid. However, a mixture (in one shadow set) of RZ74 disk drives and RZ26 disk drives is NOT valid and should not be attempted.

Because the HSJ and HSD30 array controllers report both disk drive types as HSX00 (HSX00 is an example of a device type code), you must distinguish between the two device types by determining the following attributes:

- Capacity. The capacity must be identical for all devices used within a single shadow set.

- Physical device. The physical device type must be identical for all devices to be used in a single host-based shadow set. The physical device type is obtained by entering the controller SHOW DISK command.

Storagesets created in the controller's configuration and combined with other storagesets in a host-based shadow set also must be identical.

8.3.7 ERF with OpenVMS Systems

The limitations in this section apply to specific versions of the OpenVMS VAX and OpenVMS Alpha operating systems as indicated in the release notes and/or in the controller SPD.

Current versions of the OpenVMS ERF utility translate event codes reported by HSOF provided the OpenVMS operating system is Version 6.1 or higher.

For OpenVMS Version 6.0 and earlier, the error report formatter (ERF) does not decode controller and device names, but does decode the basic MSCP and TMSCP error packet contents. The basic MSCP and TMSCP packets are decoded except for the controller model byte which is not translated from decimal 40 to the character string ''HSJ40.''

Example 8–1 is an example from an OpenVMS Alpha Version 6.1 error log translated by ERF.

Note

The string ''MODEL = 40.'' should be interpreted as ''HSJ40.''

Example 8–1 OpenVMS Alpha V6.1 ERF Error Log Report

```
V M S                SYSTEM ERROR REPORT     COMPILED  9-AUG-1994 13:41:37
                                                                 PAGE 758.

************************** ENTRY    1122. ******************************
ERROR SEQUENCE 5.                            LOGGED ON:  CPU_TYPE 00000002
DATE/TIME 28-APR-1994 11:39:40.33                        SYS_TYPE 00000003
SYSTEM UPTIME: 0 DAYS 00:01:41
SCS NODE: MTX2                                        OpenVMS Alpha X6.1-FT7

HW_MODEL: 00000401 Hardware Model = 1025.

ERL$LOGMESSAGE ENTRY DEC 7000 Model 610

I/O SUB-SYSTEM, UNIT _MAT$DUA450:

      MESSAGE TYPE        0001
                                     DISK MSCP MESSAGE
      MSLG$L_CMD_REF  00000000
      MSLG$W_UNIT         01C2
                                     UNIT #450.
      MSLG$W_SEQ_NUM      0015
                                     SEQUENCE #21.
      MSLG$B_FORMAT         02
                                     DISK TRANSFER LOG
      MSLG$B_FLAGS          00
                                     UNRECOVERABLE ERROR
      MSLG$W_EVENT        014B
                                     DRIVE ERROR
                                     CNTRLR DETECTED PROTOCOL ERROR
      MSLG$Q_CNT_ID   01280009 40802576
                                     UNIQUE IDENTIFIER, 000940802576(X)
                                     MASS STORAGE CONTROLLER
                                     MODEL = 40.
      MSLG$B_CNT_SVR        14
                                     CONTROLLER SOFTWARE VERSION #20.
      MSLG$B_CNT_HVR        49
                                     CONTROLLER HARDWARE REVISION #73.
      MSLG$W_MULT_UNT     0035
      MSLG$Q_UNIT_ID  02FF0000 00000022
                                     UNIQUE IDENTIFIER, 000000000022(X)
                                     DISK CLASS DEVICE (166)
                                     HSXnn
      MSLG$B_UNIT_SVR       01
                                     UNIT SOFTWARE VERSION #1.
      MSLG$B_UNIT_HVR       43
                                     UNIT HARDWARE REVISION #67.
      MSLG$B_LEVEL          01
      MSLG$B_RETRY          00
      MSLG$L_VOL_SER  00000000
                                     VOLUME SERIAL #0.
      MSLG$L_HDR_CODE 00000000
                                     LOGICAL BLOCK #0.
                                     GOOD LOGICAL SECTOR
```

(continued on next page)

Example 8–1 (Cont.) OpenVMS Alpha V6.1 ERF Error Log Report

```
CONTROLLER DEPENDENT INFORMATION
       LONGWORD 1.     030C4002
                                    /.@../
       LONGWORD 2.     00003C51
                                    /Q<../
       LONGWORD 3.     00000000
                                    /..../
       LONGWORD 4.     000B9331
                                    /1.../
       LONGWORD 5.     00000000
                                    /..../
       LONGWORD 6.     00000000
                                    /..../
       LONGWORD 7.     00000000
                                    /..../
       LONGWORD 8.     00000000
                                    /..../
       LONGWORD 9.     1F000504
                                    /..../
       LONGWORD 10.    36325A52
                                    /RZ26/
       LONGWORD 11.    20202020
                                    /    /
       LONGWORD 12.    29432820
                                    / (C)/
       LONGWORD 13.    43454420
                                    / DEC/
       LONGWORD 14.    34333533
                                    /3534/
       LONGWORD 15.    37313739
                                    /9717/
       LONGWORD 16.    00000000
                                    /..../
       LONGWORD 17.    00000004
                                    /..../
       LONGWORD 18.    00000000
                                    /..../
       LONGWORD 19.    853F0000
                                    /..?./
       LONGWORD 20.    00000000
                                    /..../
```

Some subcodes and all controller-dependent information is not decoded by ERF. Instructions for how to decode this information is contained in the *StorageWorks Controllers HS Family of Array Controllers Service Manual*. Example 8–2 is an example of an OpenVMS VAX error log that did not decode the subcodes and the controller dependent information.

Example 8–2 OpenVMS VAX ERF Error Log That Did Not Decode Fully

```
      MSLG$W_EVENT        040A
                                    CONTROLLER ERROR
                                    UNKNOWN SUBCODE #0020(X)
      MSLG$Q_CNT_ID   30300019
                      01280001
                                    UNIQUE IDENTIFIER, 000130300019(X)
                                    MASS STORAGE CONTROLLER
                                    MODEL = 40.
      MSLG$B_CNT_SVR        FF
                                    CONTROLLER SOFTWARE VERSION #255.
      MSLG$B_CNT_HVR        00
                                    CONTROLLER HARDWARE REVISION #0.

CONTROLLER DEPENDENT INFORMATION
      LONGWORD 1.     030A0000
                                    /..../
      LONGWORD 2.     24010102
                                    /...$/
      LONGWORD 3.     00000000
                                    /..../
      LONGWORD 4.     7BDF0000
                                    /..ß{/
      LONGWORD 5.     00000000
                                    /..../
      LONGWORD 6.     01000000
                                    /..../
      LONGWORD 7.     00004200
                                    /.B../
      LONGWORD 8.     00000000
                                    /..../
      LONGWORD 9.     00000000
                                    /..../
      LONGWORD 10.    00000000
                                    /..../
      LONGWORD 11.    00000000
                                    /..../
      LONGWORD 12.    00000000
                                    /..../
      LONGWORD 13.    00000000
                                    /..../
      LONGWORD 14.    00000000
                                    /..../
      LONGWORD 15.    4F4C0000
                                    /..LO/
```

ERF does not recognize (translate) devices or their device-specific extended error status. However, ERF does decode basic MSCP and TMSCP reported error packets from the HSJ or HSD30 array controller.

Refer to the *StorageWorks Array Controllers HS Family of Array Controllers Service Manual* for ERF decode and error packet information for the HSJ or HSD30 array controllers.

8.3.8 DECevent for OpenVMS VAX and OpenVMS Alpha Operating Systems

The DECevent utility is an event management utility that provides the interface between you and the operating system's event logger. DECevent provides the following two main functions:

- Translation and Reporting—DECevent allows you to translate events into ASCII reports derived from system event entries (bit-to-text translations). Information about how the DECevent translation and reporting function works can be found in the *DECevent Translation and Reporting Utility for OpenVMS User and Reference Guide*. This function is bundled with the operating system software and supports HS array controllers.
- DECevent Value-Added Functions—DECevent constantly monitors system events in an effort to identify failing device components through analysis and notifies the proper individuals of a potential problem, if necessary. Information about how the Analysis and Notification function of DECevent works can be found in the *DECevent Analysis and Notification Utility for OpenVMS User and Reference Guide*. This function is not currently available for HS array controllers.

Translation and Reporting Function

One function of the DECevent utility is to provide the interface between you and the operating system's logger, so that you can request the translation of events from specific event entries into a variety of ASCII reports. The format and contents of the ASCII reports are determined by commands, with qualifiers, parameters, and selection keywords appended, entered on the command line interface (CLI). The maximum command line character limit allowed is 255 characters.

The DECevent utility has the following features relating to the translation of events:

- Translating event log entries into readable reports

  The DECevent utility uses the system event log file as the default input file. On OpenVMS systems the default input file is SYS$ERRORLOG:ERRLOG.SYS. To produce a translated event report using the default system event log, use the following command:

  ```
  $ DIAGNOSE
  ```

- Selecting input and output sources
- Filtering input events

  There will be times when you do not want all the information contained in the input event log file. The /INCLUDE and /EXCLUDE qualifiers allow you to filter input event log files in include or exclude event information.

- Selecting alternate reports
- Translating events as they occur
- Maintaining and customizing the user environment with the interactive shell commands

On OpenVMS VAX and OpenVMS Alpha systems, you need the SYSPRV privilege to use the DECevent utility. You also need the DIAGNOSE privilege to enable continuous display (the /CONTINUOUS qualifier) on the terminal.

DECevent Version 1.1 comes bundled with the OpenVMS Alpha (Version 6.1 and higher) operating system as a customer installable option. The ERF (error report formatter) also comes bundled with the operating system as the primary service tool.

Example 8–3 is a bit-to-text translation example of a DECevent error event report generated on a DEC 7000 Model 610 processor using DECevent Version 1.1a as shipped on the SSB CD–ROM:

Example 8–3 DECevent Bit-to-Text Translation Error Event Report

```
************************** ENTRY 1122 ******************************

Logging OS                        3. OpenVMS Alpha
OS version                           X6.1-FT7
Event sequence number             5.
Timestamp of occurrence              28-APR-1994 11:39:40
System uptime in seconds        101.
VMS error mask             x00000000
VMS flags                      x0001  Dynamic Device Recognition present
Host name                            MTX2

Alpha HW model                       DEC 7000 Model 610
System type register       x00000003  DEC 7000
Unique CPU ID              x00000002
mpnum                      x000000FF
mperr                      x000000FF

Event validity                   -1. Unknown validity code
Event severity                   -1. Unknown severity code
Entry type                      100.
Major Event class                 3. IO Subsystem
Alpha Device Type                 0.

IO Minor Class                    1. MSCP
IO Minor Sub Class                5. Logged Message

---- Device Profile ----
Vendor
Product Name                         HSX00 MSCP basic disk
Unit Name                            MAT$DUA
Unit Number                     450.
Device Class                   x0001  Disk

---- IO SW Profile ----
VMS DC$_CLASS                     1.
VMS DT$_TYPE                    141.

---- MSCP Logged Msg ----

Command Reference number   x00000000
Unit Number                     450.
MSCP Sequence number             21.
Logged Message Format             2. Disk Transfer Error
MSCP Flags                      x00  No MSCP Flags indicated
```

(continued on next page)

Example 8–3 (Cont.) DECevent Bit-to-Text Translation Error Event Report

```
MSCP Unique Controller-ID x0000000940802576
MSCP Controller Model            40. HSJ40 HS Array Controller
MSCP Controller Class             1. Mass Storage Controller class
Controller SW version            20.
Controller HW version            73.

MSCP Unique Unit-ID       x0000000000000022
MSCP Unit Model                  -1. HSX0n MSCP basic/virtual disk
MSCP Unit Class                   2. Disk class - DEC Std 166 disk
Unit SW version                   1.
Unit HW version                  67.

MSCP Event Code               x014B  Major Event =  Drive Error
                                     Sub-event =  Controller Detected Protocol
                                                  Error

Multiunit code                x0035
Error recovery Level              1.
Retry count                       0.
Volume Serial Number              0.
Header code               x00000000  Flags=  Good LBN
                                     LBN  =   0.

------- HSAC Data -------
Instance Code             x030C4002  A Drive failed because a Test Unit Ready
                                     command or a Read Capacity command failed.
                                     Component ID =   Device Services.
                                     Event Number =   x0000000C
                                     Repair Action =   x00000040
                                     NR Threshold =   x00000002
Template Type                  x51  Disk Transfer Error.
Power On Time Value       x00000000000B9331

Completed Byte Count              0.
Starting LBN                      0.
Device Locator            x00000504  Port    =   4.
                                     Target  =   5.
                                     LUN     =   0.
SCSI Device Type               x1F  Device Type not decoded.
Drive Product Name                  RZ26     (C) DEC
Drive Serial Number                 35349717
Command Opcode                 x00  Test Unit Ready
Sense Data Qualifier           x00  Buf Mode = The target shall not report
                                                GOOD status on write commands
                                                until the data blocks are
                                                actually written on the
                                                medium.
                                    UWEUO = zero, not defined
                                    MSBD = zero, not defined
                                    FBW = zero, not defined
                                    DSSD = Sense Data fields were generated
                                           by the HSAC controller on behalf
                                           of the target devices because the
                                           Sense Data could not be obtained
                                           from that device.
```

(continued on next page)

Example 8–3 (Cont.) DECevent Bit-to-Text Translation Error Event Report

```
--- HSAC Sense Data ---

Error Code                      x00  Error Code no decoded
Segment #                       x00
Information Bytes          x00000000
CMD Specific Info          x00000000
Sense Key                       x04  Hardware Error

ASC & ASCQ                    x3F85  ASC  =   x003F
                                     ASCQ =   x0085
                                     Test Unit Ready or Read Capacity
                                     Command failed

FRU Code                        x00
Sense Key Specific Data    x00000000  Sense Key Data NOT Valid
                                     Byte 1 =   x00000000
                                     Byte 2 =   x00000000
                                     Byte 3 =   x00000000
```

For more information on the use of DECevent, refer to the manuals listed in this section. For installation questions refer to the *DECevent Installation Guide*.

8.3.9 OpenVMS Alpha Support

Refer to the OpenVMS Alpha operating system documentation for operating system specific information. The OpenVMS Alpha operating system versions that support the HSJ and HSD30 array controllers are listed in the SPD and the release notes. With the exception of some ERF limitations, the other limitations listed in this chapter do not apply to the OpenVMS Alpha operating system unless otherwise specified in the OpenVMS Alpha documentation.

Refer to Section 8.3.7 for details of limitations for ERF under the OpenVMS Alpha operating system. Refer to Section 8.3.1 for the method of establishing a virtual terminal connection via DUP for HSJ and HSD30 array controllers.

Loading the FYDRIVER for OpenVMS Alpha

Creating a virtual terminal connection under the OpenVMS Alpha operating system requires that the FYDRIVER be loaded. The following error indicates that the FYDRIVER has not been loaded:

```
%HSCPAD-F-DRVNOTLOAD, FYDRIVER not loaded
-SYSTEM-W-NOSUCHDEV, no such device available
```

If you receive this message, load the OpenVMS Alpha FYDRIVER as follows:

```
$ MCR SYSMAN
SYSMAN> IO CONNECT FYA0 /NOADAPTER/DRIVER=SYS$FYDRIVER
SYSMAN> EXIT
$
```

Once the driver is loaded, you may make the virtual terminal connection. Refer to Section 8.3.1.

SHOW CLUSTER Command HSD30 Array Controller Recognition

The HSD30 array controller is recognized under the OpenVMS Alpha operating system as an HSD30 array controller in the RP_TYP field of the SHOW CLUSTER command.

8.4 DEC OSF/1 Support

Refer to the DEC OSF/1 operating system documentation for operating system specific information. Refer to HS array controller-specific SPDs and release notes for supported versions. Not all controller models are currently supported by the DEC OSF/1 operating system.

Note

All configuration set up, parameter definitions, and utilities must be run by using an appropriate terminal emulator with a maintenance terminal connected to your controller's terminal port.

Controller-Attached Disks as DEC OSF/1 Initialization Devices

To create a device for system initialization, place the DEC OSF/1 operating system on the controller unit (visible to the host as LUN 0 under the HSZ40 array controller SCSI target).

8.4.1 uerf with DEC OSF/1 for HSZ Array Controllers

The HSZ array controller is supported by the UNIX error report formatter (uerf) under the DEC OSF/1 operating system. The DEC OSF/1 operating system can log events to the binary.errlog file. Example 8–4 shows the controller model name and all of the extended sense data.

Example 8–4 is an example of an HSZ40 array controller uerf error event log using the **uerf -0 full** command.

Example 8–4 uerf HSZ40 Array Controller Error Event Log

```
----- EVENT INFORMATION -----

EVENT CLASS                              ERROR EVENT
OS EVENT TYPE                  199.      CAM SCSI
SEQUENCE NUMBER                 19.
OPERATING SYSTEM                         DEC OSF/1
OCCURRED/LOGGED ON                       Tue Mar 15 12:36:47 1994
OCCURRED ON SYSTEM                       dombek
SYSTEM ID                x0004000F       CPU TYPE: DEC
                                         CPU SUBTYPE: KN15AA

----- UNIT INFORMATION -----

CLASS                          x0000     DISK
SUBSYSTEM                      x0000     DISK
BUS #                          x000E
                               x0392     LUN x2
                                         TARGET x2

----- CAM STRING -----

ROUTINE NAME                             cdisk_check_sense

----- CAM STRING -----

ROUTINE NAME                             cdisk_check_sense

----- CAM STRING -----

                                          Hardware Error bad block number: 0

----- CAM STRING -----

ERROR TYPE                               Hard Error Detected

----- CAM STRING -----

DEVICE NAME                              DEC     HSZ40

----- CAM STRING -----

                                         Active CCB at time of error

----- CAM STRING -----

                                         CCB request completed with an error
ERROR - os_std, os_type = 11, std_type = 10

----- ENT_CCB_SCSIIO -----
```

(continued on next page)

Example 8–4 (Cont.) uerf HSZ40 Array Controller Error Event Log

```
*MY ADDR                  x8A960728
CCB LENGTH                    x00C0
FUNC CODE           x01
CAM_STATUS                    x0084     CAM_REQ_CMP_ERR
                                        AUTOSNS_VALID
PATH ID             14.
TARGET ID           2.
TARGET LUN          2.
CAM FLAGS                 x00000442
                                        CAM_QUEUE_ENABLE
                                        CAM_DIR_IN
                                        CAM_SIM_QFRZDIS
*PDRV_PTR                 x8A960428
*NEXT_CCB                 x00000000
*REQ_MAP                  x8A971E00
VOID (*CAM_CBFCNP)()      x003B5520
*DATA_PTR                 x40023230
DXFER_LEN                 x00000200
*SENSE_PTR                x8A960450
SENSE_LEN           xA0
CDB_LEN             x06
SGLIST_CNT                    x0000
CAM_SCSI_STATUS               x0002     SCSI_STAT_CHECK_CONDITION
SENSE_RESID         x00
RESID                     x00000000
CAM_CDB_IO          x0000000000000001DA681B08
CAM_TIMEOUT               x0000003C
MSGB_LEN                      x0000
VU_FLAGS                      x4000
TAG_ACTION          x20

----- CAM STRING -----

                                        Error, exception, or abnormal
                                         _condition

----- CAM STRING -----

                                        HARDWARE ERROR - Nonrecoverable
                                         _hardware error

----- ENT_SENSE_DATA -----
```

(continued on next page)

Example 8–4 (Cont.) uerf HSZ40 Array Controller Error Event Log

```
ERROR CODE                    x0070     CODE x70
SEGMENT             x00
SENSE KEY                     x0004     HARDWARE ERR
INFO BYTE 3         x00
INFO BYTE 2         x00
INFO BYTE 1         x00
INFO BYTE 0         x00
ADDITION LEN        x98
CMD SPECIFIC 3      x00
CMD SPECIFIC 2      x00
CMD SPECIFIC 1      x00
CMD SPECIFIC 0      x00
ASC                 x44
ASQ                 x00
FRU                 x00
SENSE SPECIFIC      x000000
ADDITIONAL SENSE
0000:   00030000  01080108  00000206  40020000        *...............@*
0010:   01510309  08002800  01DA681B  01000000        *..Q..(...h......*
0020:   00000700  20202020  58432020  33323130        *....      CX0123*
0030:   37363534  5A373845  00000000  36333400        *4567E87Z.....436*
0040:   325A5241  20202038  43282020  45442029        *ARZ28     (C) DE*
0050:   00000043  00000000  00000004  00000000        *C...............*
0060:   01080000  00000000  00000000  00000000        *................*
0070:   00000000  00000000  00000000  00000000        *................*
0080:   00000000  00000000  00000000  00000000        *................*
0090:   7E250000  00005E3C  00000000  00000000        *..%~<^.........*
```

The uerf utility may also display unsupported error entries. This could be because of new device drivers or routines that are unknown to the error formatter and the error formatter has not been updated to include new routines. To help display those types of errors, use the -Z qualifier. The data is displayed in hex format. The command format is: **uerf -Z -o full -r 199 -R**

The names of the routines and the nature of the problem are displayed in the ASCII representation portion of the hex data as shown in Example 8–5.

Example 8–5 uerf Utility Error Event Using the -Z Qualifier

```
********************************* ENTRY     1. *********************************

----- EVENT INFORMATION -----

EVENT CLASS                              ERROR EVENT
OS EVENT TYPE                  199.      CAM SCSI
SEQUENCE NUMBER                  4.
OPERATING SYSTEM                         DEC OSF/1
OCCURRED/LOGGED ON                       Fri Jan 27 11:04:26 1995
OCCURRED ON SYSTEM                       joey
SYSTEM ID                 x00000009      CPU TYPE:  DEC 2100
SYSTYPE                   x00000000

----- UNIT INFORMATION -----

CLASS                          x0033
SUBSYSTEM                      x0000     DISK
BUS #                          x0002

----- CAM STRING -----
```

(continued on next page)

Example 8–5 (Cont.) uerf Utility Error Event Using the -Z Qualifier

```
ROUTINE NAME                              spo_process_ccb

----- CAM STRING -----

                                          A SCSI bus reset has been done

----- UNSUPPORTED ENTRY -----

CAM ENTRY                 x00000436

RECORD ENTRY DUMP:

  RECORD HEADER
0000:   00040220  00000009  00060101  2F29198A        * .............)/*
0010:   70737661  00003667  00000000  00000000        *joey.........*
0020:   00000001  00000000  003300C7  FFFF0002        *.........3.....*
0030:   FFFFFFFF  00000000                            *........       *

  RECORD BODY
0038:   000000C7  00000000  00000333  00000033        *........3...3...*
0048:   00000003  FFFFFFFE  0067CDF0  FFFFFC00        *.........g.....*
0058:   00000001  FFFFFC00  00000102  00000010        *................*
0068:   00000010  00000000  00620278  FFFFFC00        *........x.b.....*
0078:   00000001  00000000  5F6F7073  636F7270        *........spo_proc*
0088:   5F737365  00626363  00000100  0000001F        *ess_ccb.........*
0098:   00000020  00000000  006202B8  FFFFFC00        * .........b.....*
00A8:   00000001  00000000  43532041  62204953        *........A SCSI b*
00B8:   72207375  74657365  73616820  65656220        *us reset has bee*
00C8:   6F64206E  0000656E  00000436  00000128        *n done..6...(...*
00D8:   00000128  00000001  0628DA00  FFFFFFFE        *(.........(.....*
00E8:   00000002  00000000  06299520  FFFFFFFE        *........ .).....*
00F8:   00000240  00000004  0501001C  00000003        *@...............*
0108:   00000000  00000000  00000000  00000000        *................*
0118:   00000000  00000000  00000000  00000000        *................*
0128:   177F2080  FFFFFFFE  4E109520  00000000        *. ...... ..N....*
0138:   00000000  00000000  00527B20  FFFFFC00        *........ {R.....*
0148:   00527CB0  FFFFFC00  00528B90  FFFFFC00        *.|R.......R.....*
0158:   00803247  00000000  00000000  00000000        *G2..............*
0168:   00000000  00000038  000000F1  00000700        *....8...........*
0178:   20434544  504D4953  2F54524F  33314156        *DEC SIMPORT/VA13*
0188:   20434544  20415A54  2F4F5053  34312E41        *DEC TZA SPO/A.14*
0198:   00000000  00000000  0000000C  00000000        *................*
01A8:   1FB78000  FFFFFFFE  06229D00  FFFFFFFE        *..........".....*
01B8:   06290600  FFFFFFFE  00000000  00000000        *..)............*
01C8:   0621B328  FFFFFFFE  0621B728  FFFFFFFE        *(.!.....(.!.....*
01D8:   00000000  00000000  00000000  00000000        *................*
01E8:   00000000  00000000  00000000  00000000        *................*
01F8:   00000000  00000000  00000000  00000000        *................*
0208:   00000000  00000000  00000000  00000000        *................*
0218:   00000000  5E3C7E25                            *....%~<^       *
*********************************************************************

Notice that the reporting component is the
DEC SIMPORT and the DEC TZA SPO.  This information points to the
CAM Component that detected the error and can be useful in isolating the
problem.
```

8.4.2 DECsafe Available Server Environment (ASE)

The DECsafe Available Server Environment (ASE) for DEC OSF/1 can be used with HSZ controller-attached disk devices provided a valid host configuration (including host adapters) is used to support them. Refer to the *DEC OSF/1 ASE Installation and User's Guide*, part number AA–PUAAC–TE for further

information. Refer to the HSZ array controller release notes for supported host adapters and DEC OSF/1 version levels for ASE.

8.4.3 Configurations and Device Support for the HSZ Array Controllers

The following sections describe the type of device support and how those devices can be used for the Version 2.5 firmware release for HSZ array controllers.

Only disk-type devices (rz*xx* and ez*xx*) are supported at the time of printing. Refer to the HSZ array controller release notes and SPD for current information. Disks attached via an HSZ array controller can be either data or system devices.[1] A disk (physical or virtual) name used as a system device for DEC OSF/1 ''must'' be defined using only LUN 0 (as visible to the system). For example, UNIT 0, or UNIT 100 (any unit where the ones digit is 0, the LUN is 0).

8.4.3.1 Virtual Terminal Capability

The virtual maintenance terminal facility for communicating with an HSZ array controller over its SCSI bus interface is provided by a host user application called HSZterm. For details about HSZterm restrictions and instructions for using the program, refer to the StorageWorks configuration manager documentation listed in the Related Documentation section in the preface of this manual.

8.4.3.2 DEC OSF/1 Device Special Files for HSZ Array Controllers

For DEC OSF/1 to recognize multiple LUNs behind a given target (such as the HSZ array controller) [hereafter referred to as units], the DEC OSF/1 device special files for each LUN must be manually created. The following information is required to create these device special files:

- The bus number in which the SCSI Host Adapter resides
- The target number containing the LUN
- The LUN number

It is recommended that the following guidelines be used for choosing the DEC OSF/1 device names for the DEC OSF/1 device special files that are going to be used for HSZ40 devices:

This document uses an OSF/1 device naming scheme for HSZ40 units that is in the following format:

```
rzxnny.
```

The *x* should be one alphabetic character between a - h. This character represents the Host Side LUN that is part of an HSZ40 unit designator. That is:

a = LUN 0
b = LUN 1
c = LUN 2
d = LUN 3
e = LUN 4
f = LUN 5
g = LUN 6
h = LUN 7

The *nn* is a number. This number is calculated using the following formula:

```
( 8 * Host Side SCSI Bus #) + (Target ID from HSZ40 unit designator)
```

[1] Refer to the HSZ array controller release notes for restrictions.

The above naming format is recommended for the naming of DEC OSF/1 HSZ40 devices. This format prevents DEC OSF/1 naming conflicts between HSZ40 devices and other SCSI devices that may be present on the host system.

The DEC OSF/1 utility that is used to create device special files is **mknod**. The user must be superuser to use this command. The default working directory must be **/dev**. Refer to the MAN pages on the mknod utility.

To access the HSZ40 units the following must be created:

- 8 block-oriented device special files for each LUN (1 for each partition a through h)
- 8 character-oriented device special files for each LUN (1 for each partition a through h)

The following two parameters are required to create a device special file when using the **mknod** command:

- major number
- minor number

The *major* number for SCSI direct access devices is *8*. The *minor* number for partition *a* is calculated using the following formula:

```
minor number = (bus# * 16384) + (target# * 1024) + (LUN# * 64)
```

The minor number for each subsequent partition for this unit is derived by adding 1 to the current partition. For example, the minor number for partition *b* is 1 + the minor number for partition *a*.

Examples 8–6 and 8–7 are examples for creating device special files.

Example 8–6 Creating Device Special Files (NATIVE SCSI Host Adapter)

Suppose you want to communicate with LUN 0 on an HSZ40 array controller at SCSI target ID 2 connected via the SCSI bus to a native SCSI host adapter at bus 1, and the HSZ40 unit designator is D200. The following steps create the device special files for this configuration, using the previously mentioned naming format of *rzxnny*:

1. Generate the file name for partition device special files:

   ```
   nn = (1 * 8) + 2 = 10

   file name = rza10a (block) and rrza10a (character)
   ```

2. Calculate the minor number for the "a" partition device special file:

   ```
   minor number = (1 * 16384) + (2 * 1024) + (0 * 64) = 18432
   ```

3. Create the device special files using mknod:

   ```
   cd /dev

   mknod /dev/rza10a b 8 18432
   mknod /dev/rrza10a c 8 18432

   mknod /dev/rza10b b 8 18433
   mknod /dev/rrza10b c 8 18433

   mknod /dev/rza10c b 8 18434
   mknod /dev/rrza10c c 8 18434

   mknod /dev/rza10d b 8 18435
   mknod /dev/rrza10d c 8 18435

   mknod /dev/rza10e b 8 18436
   mknod /dev/rrza10e c 8 18436

   mknod /dev/rza10f b 8 18437
   mknod /dev/rrza10f c 8 18437

   mknod /dev/rza10g b 8 18438
   mknod /dev/rrza10g c 8 18438

   mknod /dev/rza10h b 8 18439
   mknod /dev/rrza10h c 8 18439
   ```

At this point, you should be able to write a disk label to /dev/rrza10c with the following command:

```
disklabel -rw /dev/rrza10c hsz40
```

If an error is experienced, try using the "a" partition in the disklabel command, rather than the "c" partition.

Example 8–7 Creating Device Special Files (SCSI Host Adapter)

Suppose you want to communicate with LUN 4 on an HSZ40 array controller at SCSI target ID 2 connected via the SCSI bus to a KZTSA SCSI host adapter at bus 14, and the HSZ40 unit designator is D204.
The following steps create the device special files for this configuration using the name format *rzxnny*:

1. Generate the file name for partition device special files:

   ```
   nn = (14 * 8) + 2 = 114

   file name = rze114a (block) and rrze114a (character)
   ```

2. Calculate the minor number for the "a" partition device special file:

   ```
   minor number = (14 * 16384) + (2 * 1024) + (4 * 64) = 231680
   ```

3. Create the device special files using mknod:

   ```
   cd /dev

   mknod /dev/rze114a b 8 231680
   mknod /dev/rrze114a c 8 231680

   mknod /dev/rze114b b 8 231681
   mknod /dev/rrze114b c 8 231681

   mknod /dev/rze114c b 8 231682
   mknod /dev/rrze114c c 8 231682

   mknod /dev/rze114d b 8 231683
   mknod /dev/rrze114d c 8 231683

   mknod /dev/rze114e b 8 231684
   mknod /dev/rrze114e c 8 231684

   mknod /dev/rze114f b 8 231685
   mknod /dev/rrze114f c 8 231685

   mknod /dev/rze114g b 8 231686
   mknod /dev/rrze114g c 8 231686

   mknod /dev/rze114h b 8 231687
   mknod /dev/rrze114h c 8 231687
   ```

At this point, you should be able to write a disk label to /dev/rrze114c with the following command:

```
disklabel -rw /dev/rrze114c hsz40
```

If an error is experienced, try using the "a" partition in the disklabel command, rather than the "c" partition.

8.5 Basic Steps for Configuring an HSZ Array Controller Under the DEC OSF/1 Operating System

The following sections and examples present information you will need to configure your HSZ controllers with the DEC OSF/1 operating system. Some of the basic HSZ configuration concepts presented here use different terminology than other parts of this manual. We hope that these sections help those of you who are having difficulty understanding the Port Target LUN (especially the LUN) terminology and concepts.

The term container is used to refer to any entity that is capable of storing data. This entity can be a single disk device, or a group of disk devices, such as a RAIDset, stripeset, or mirrorset.

The following list describes the major steps for configuring HSZ40 controller containers for use by the DEC OSF/1 operating system.

1. Add disk devices (containers) to the HSZ40 array controller configuration
2. Add RAIDsets, stripesets, or mirrorsets (containers) to the HSZ40 array controller configuration (if needed)
3. Initialize devices or storagesets (containers) after they are added
4. Add units (made from an initialized container)
5. Create Device Special Files on the DEC OSF/1 operating system.
6. If system devices are to be used on the HSZ40 controller, steps 1-4 must be completed before beginning the DEC OSF/1 installation procedures.

Note

Only units whose unit designators use LUN 0 can be used for system devices on HSZ array controllers. The special files are created for those devices with the installation procedures.

Examples of HSZ40 array controller units whose unit designators use LUN 0 are: D000, D0 , D100 , D200, and so forth.

8.6 Terminology

The following is a block diagram of a typical HSZ array controller subsystem:

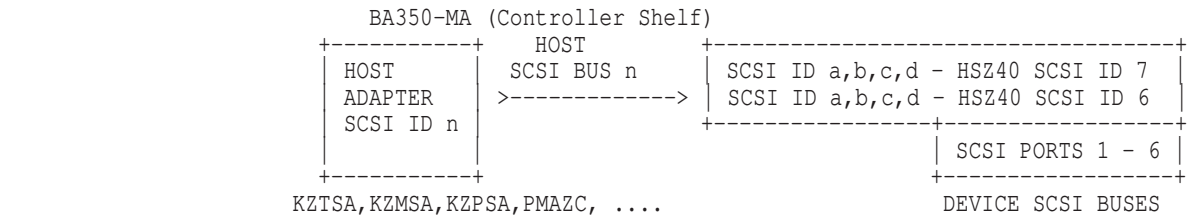

The following list describes the various parts of the block diagram:

- **Host SCSI Bus**—The SCSI bus that connects the host adapter to the HSZ40 array controller. This is sometimes called the ‘‘front end’’ SCSI bus or the ‘‘host side’’ bus.
- **Device SCSI Bus**—The SCSI bus that connects the HSZ40 array controller to the SCSI–2 devices. This is sometimes called the ‘‘back end’’ SCSI bus or the ‘‘device side’’ bus. These buses are also referred to as device ports and are numbered 1 to 6. The devices reside in BA350–SA/SB storage device shelves.
- **HSZ40 SCSI IDs**—For HSOF Version 2.0 and above, up to four host side SCSI target IDs can be set for a single HSZ controller (or up to four host side SCSI target IDs for a dual-redundant HSZ configuration). These ID numbers can be any ID number between 0 and 7.

However, the host side SCSI host adapter's SCSI ID is also on this bus. The HSZ40 array controller's host side SCSI IDs must be different than the host adapter's ID. Usually the host adapter's ID is 7. However, this ID is usually configured through the host system console utilities and it can be something other than 7. It is recommended that the host adapter use ID 7.

The HSZ40 array controller's host side IDs are set using the HSZ40 array controller's Command Language Interpreter (CLI). The CLI is accessed through the maintenance terminal port on the front bezel of the HSZ40 array controller.

The HSZ40 array uses device side SCSI IDs of 7 or 6. These IDs are dependent upon the physical slots of the controller shelf in which the HSZ40 array controller is installed.

If the HSZ40 array controller is located in the slot *furthest* from the device side SCSI connectors, its device side ID is 7. If the HSZ40 array controller is located in the physical slot *closest* to the device side SCSI connectors, its device side ID is 6. In a dual-redundant controller configuration, one HSZ40 array controller has a device side ID of 7, the other controller has a device side ID of 6. In a single HSZ controller configuration, the controller should always be mounted in device side ID slot 7.

- **HSZ40 Storage Container**—Is a single- or multiple-device storageset.
- **HSZ40 UNIT**—This entity represents a storage container that is available for use by the DEC OSF/1 host operating system. HSZ40 units are created from storage containers. Until a storage container is made into a unit, the storage container is not available to the DEC OSF/1 operating system.
- **HSZ40 UNIT** *Designator*—This entity is used by the HSZ40 to identify a unique storage container that is made available to the host operating system. The unit designator is assigned to a storage container when the storage container is configured as a unit, by the CLI's ADD UNIT command.

  The unit designator consists of a host side SCSI ID and a host side LUN.
- **DEC OSF/1 Disk Device**—(As used in reference to an HSZ40 array controller subsystem.) A DEC OSF/1 disk device is a DEC OSF/1 entity that relates to an HSZ40 unit. A DEC OSF/1 disk device can be a single disk device container or a multidisk device container, depending upon the configuration of the HSZ40 unit that relates to the OSF/1 disk device.

  The relationship between the HSZ40 unit and the DEC OSF/1 disk device name is made by invoking the DEC OSF/1 utility, *mknod*.
- **SCSI Target ID**—Unfortunately, the term Target ID as used in an HSZ40 controller environment refers to two different entities. There is a Target ID as used on the Host Side bus, and another Target ID as used on the device side bus.

  Host Side Target ID—This is one of the four SCSI ID numbers assigned to the host side SCSI ID. This Target ID is used by the host adapter to communicate with the HSZ40 array controller.

  Device Side Target ID—This SCSI ID is used to communicate between the HSZ40 array controller and the devices on the Device Side SCSI buses. It is used by the HSZ40 controller to identify a unique device on one of the device side SCSI buses. From a user's point of view, the device side target ID is only used when configuring devices on the HSZ40 array controller.

- **LUN and Logical LUN**—Again, the term LUN refers to two different entities in a HSZ40 controller environment, the host side bus LUN and the device side bus LUN.

  Host Side LUN—This entity is part of the HSZ40 UNIT Designator. It is used by the host operating system to identify a unique HSZ40 unit.

  Device Side LUN—In current HSOF versions, this LUN is always 0. The device side Target ID and the Port number are the only entities that are currently used by the HSZ40 controller to identify a unique device on the device side SCSI Bus.

8.7 Specific Procedures

The host side SCSI bus is the SCSI bus that connects the HSZ40 controller to the host system adapter. It has a SCSI bus number that depends upon the physical I/O location of the SCSI host adapter. This SCSI bus number can be determined from the DEC OSF/1 uerf utility, by entering the following DEC OSF/1 command:

```
uerf -R -o full -r 300 | more
```

Example 8–8 SCSI Bus Number Determination

```
****************************** ENTRY    21. ********************************

 ----- EVENT INFORMATION -----

 EVENT CLASS                              OPERATIONAL EVENT
 OS EVENT TYPE                  300.      SYSTEM STARTUP
 SEQUENCE NUMBER                  0.
 OPERATING SYSTEM                         DEC OSF/1
 OCCURRED/LOGGED ON                       Tue Jan 31 17:34:56 1995
 OCCURRED ON SYSTEM                       bellyup
 SYSTEM ID                 x00000009      CPU TYPE:  DEC 2100
 SYSTYPE                   x00000000
 MESSAGE                         Alpha boot: available memory from
                                  _0xbd2000 to 0xfffe000
                                 DEC OSF/1 T3.2-4  (Rev. 185); Tue Jan
                                  _24 17:31:18 EST 1995
                                 physical memory = 256.00 megabytes.
                                 available memory = 235.58 megabytes.
                                 using 975 buffers containing 7.61
                                  _megabytes of memory
                                 Firmware revision: 3.9
                                 PALcode: OSF version 1.35
                                 ibus0 at nexus
                                 AlphaServer 2100 4/200
                                 cpu 0 EV-4s 1mb b-cache
                                 gpc0 at ibus0
                                 pci0 at ibus0
                                 scsi0 at psiop0
                                 rz0 at scsi0 bus 0 target 0 lun 0 (DEC
                                  _    RZ28     (C) DEC T436)
                                 pza0 at pci0 slot 7
                                 scsi2 at pza0
                                 rz18 at scsi2 bus 2 target 2 lun 0
                                  _(DEC     HSZ40    (C) DEC V20Z)
*******************************************************************************
```

(continued on next page)

Example 8–8 (Cont.) SCSI Bus Number Determination

```
NOTICE: An external SCSI Host Adapter named PZA0
        resides at PCI slot 7.  It is attached to SCSI bus
        number 2 (SCSI--2).  A disk with a name of
        rz18 is accessed over this bus through an HSZ40
        controller.  This information is obtained from the
        previous error log entry:

                          pza0 at pci0 slot 7
                          scsi2 at pza0
                          rz18 at scsi2 bus 2 target 2 lun 0
                          _(DEC     HSZ40    (C) DEC V20Z)
```

The information from the error log entry shows that the auto-config routines in the DEC OSF/1 system startup can access the unit. However, this does not necessarily mean that the users of this system will be able to access the HSZ40 unit. The device special files that associate an HSZ40 unit with a DEC OSF/1 device name may not have been created or they may have been created incorrectly.

To see a unit on an HSZ40 controller from the Startup procedures, the device name information must be in the DEC OSF/1 Configuration File. Also, for DEC OSF/1 versions up to and including V3.2-4 the name must be in the following format:

```
rznn
```

where *nn* are numeric characters.

The following is an example from a configuration file:

```
disk device rz18 at scsi2     drive N
```

where: *rz18* is the DEC OSF/1 device name.

N represents a drive number and is determined from the following components:

- Host SCSI bus number
- HSZ40 unit designator

The following formula is used to determine the drive number:

```
( 64 * Host Side Bus # )  + ( 8 * Target ID ) + LUN
```

The drive number is the entity that allows the DEC OSF/1 startup procedures to identify the device.

The Target ID and LUN are determined from the HSZ40 unit designator.

Note

The device name does not necessarily have to be in the format *rznn*. However, some utilities may not recognize the DEC OSF/1 device name if this numeric format is not used, including the startup procedures.

In order for the users of this system to access the HSZ40 units associated with the DEC OSF/1 device names, the device special files associated with the DEC OSF/1 device name must have the correct major and minor numbers. The major number for units accessed through an HSZ40 controller must be ‘‘8.’’ This number is used by the Common Access Method (CAM) device driver. The minor number identifies the individual unit accessed by the CAM device driver. This minor number is derived from the following components:

- Host adapter SCSI bus number
- HSZ40 unit designator

If the major and minor numbers are incorrect, the HSZ40 unit can not be correctly accessed from the DEC OSF/1 operating system. The DEC OSF/1 device name can be in any format, however as was stated before, some utilities may not recognize the DEC OSF/1 name if it is not a specific format. The DEC OSF/1 *iostat utility* is a utility that only recognizes the specific format of *rznn*, where *nn* is an numeric number.

However, just because *iostat* does not recognize a name format, does not mean that the users of the system can not use a *non-numeric* name format.

If the device special files for an HSZ40 unit have been properly created, the device can be accessed by user input/output system routines by using the DEC OSF/1 device name associated with those special files, regardless of the name format.

8.8 Configuring Units on the HSZ40 Array Controller

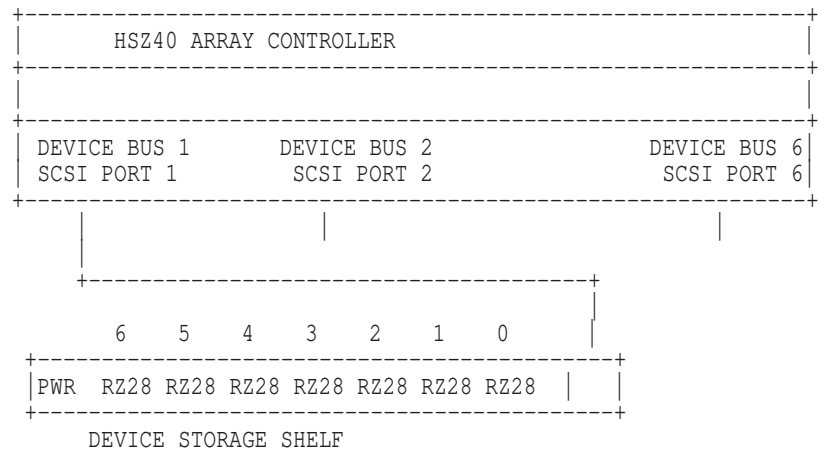

In the above diagram, a storage shelf is connected to SCSI Port 1 on the HSZ40 array controller. Each physical slot in the storage shelf is assigned a SCSI ID number. In a non-split bus configuration, the target IDs are numbered 0 to 6 (from right to left as viewed from the the front of the storage shelf). In a single HSZ40 controller configuration, SCSI ID 7 MUST be used by the HSZ40 array controller. In a dual-redundant HSZ40 controller configuration, both SCSI ID 6 and SCSI ID 7 are used by the HSZ40 array controllers.

In a dual-redundant controller configuration, SCSI devices cannot be plugged into storage shelves slots with an ID of 6. In a single controller configuration, if a controller is plugged into the controller shelf slot that uses SCSI ID 6 (it should not be), SCSI devices cannot be plugged into storage shelf slots with that same ID of 6.

The first step in creating a disk unit on the HSZ40 controller is to configure a disk device. This is done by giving the disk device a name. You must associate that name with SCSI information that allows the HSZ40 controller to relate the name to a ‘‘device bus’’ and a ‘‘target’’ on that bus. In the CLI documentation you may see the disk ‘‘name’’ defined as a ‘‘container-name’’ or a *disk-device-name*.

To configure a disk device, you must add the disk to the controller's configuration. There are three ways to add a disk device:

- Enter the ADD DISK command from the HSZ40 CLI
- Run the CONFIG utility from the HSZ40 CLI
- Run the CFMENU utility from the HSZ40 CLI

The CONFIG and CFMENU utilities invoke the ADD DISK command.

The HSZterm layered product utility also can be used from a virtual terminal. For more information on this utility, refer to the *StorageWorks Configuration Manager for DEC OSF/1 System Manager's Guide for HSZterm*.

The creation of disk devices use a Port Target Lun (PTL) naming convention. The *Port* refers to the Device SCSI Port. The *Target* refers to the target ID number of the physical slot that contains the device in the storage shelf. The *LUN* is always ‘‘0,’’ in the case of the HSZ40 array controller.

The disk name can contain up to nine characters. The name must start with a letter (A–Z) and can then consist of up to eight more characters made up of letters A–Z, numbers 0–9, periods (.), dashes (-), or underscores (_), for a total of nine characters. The name is referred to as *container-name*. The standard convention for the name is to use the following format:

```
CLI> ADD DISKPTL
```

```
Example:
```

```
CLI> ADD DISK100 1 0 0
```

where: P refers to the SCSI bus port number.

T refers to the SCSI ID number represented by the physical slot location in which the device is located.

L is the LUN number. For HSZ40 controllers, the LUN is always 0. For example:

```
    Name                Port    Target  LUN
-------------------------------------------------------
    DISK100              1        0      0
```

Consider another storage shelf connected to SCSI Port 6 with a disk in slot ID 5 of that shelf. You would add the disk using the standard name format with the following CLI command:

```
HSZ> ADD DISK DISK650 6 5 0

    Name                Port   Target   Lun
-------------------------------------------------
    DISK650              6        5      0
```

The CONFIG and CFMENU utilities automatically scan all device SCSI ports connected to the HSZ40 controller ports and configure all disks located in any storage shelves connected to those ports. These utilities use the PTL name format.

8.9 TRANSPORTABLE versus NOTRANSPORTABLE

When a single device container is created it can be defined as TRANSPORTABLE or NOTRANSPORTABLE, the default is NOTRANSPORTABLE. These qualifiers are specified with the ADD DISK command.

```
HSZ> ADD DISK DISK100 1 0 0 TRANSPORTABLE or NOTRANSPORTABLE
```

A NOTRANSPORTABLE disk uses some of the disk space for metadata that is used by the HSZ40 array controller. A device that is specified as NOTRANSPORTABLE has a few less blocks available for user data.

To view devices configured under the HSZ40 controller, use the following CLI command:

```
HSZ> SHOW DEVICES
    Name Type  Port Target Lun  Used By
 ------------------------------------------------------------------------

    DISK100 Disk  1  0  0
    DISK650 Disk  6  5  0
```

The ‘‘used by’’ field refers to any containers that are using the device. These containers can be:

- Stripeset containers
- RAID 3/5 containers
- Mirrorset containers
- Single device containers

8.10 Multiple Device Containers

If RAIDset or stripeset containers are going to be created, the physical disk devices must be configured first. After disk devices are added, RAIDsets or stripeset containers can be configured from the list of added single disk containers (enter a SHOW DEVICES command to view single devices).

To create a RAIDset container, enter the ADD RAIDSET command. To create a stripeset container, enter the ADD STRIPESET command. To create a mirrorset container, enter the ADD MIRRORSET command. Use the following command formats:

```
HSZ> ADD RAIDSET container-name list-of-disk-devices
HSZ> ADD STRIPESET container-name list-of-disk-devices
HSZ> ADD MIRRORSET container-name list-of-disk-devices
```

For example:

```
HSZ> ADD RAIDSET R0 DISK100 DISK200 DISK300
HSZ> ADD STRIPESET S0 DISK110 DISK210 DISK310
HSZ> ADD MIRRORSET MIRR1 DISK120 DISK220 DISK320
```

The *container-name* has the same naming restrictions as the disk names.

To view the containers enter the following commands:

```
HSZ> SHOW RAIDSETS
HSZ> SHOW STRIPESETS
HSZ> SHOW MIRRORSETS
```

To view an individual container, enter the following commands:

```
HSZ> SHOW R0
HSZ> SHOW S0
HSZ> SHOW M0
```

8.11 Initialization of Controllers

After containers have been created they must be initialized before units can be created. The following are examples of containers:

- Single devices
- RAIDsets
- Stripesets
- Mirrorsets

The following example shows the command string for initializing containers:

```
HSZ> INITIALIZE DISK100  (for a single device)
HSZ> INITIALIZE R0       (for a RAIDset)
HSZ> INITIALIZE S0       (for a stripeset)
HSZ> INITIALIZE M0       (for a mirrorset)
```

8.12 Creation of Units

An HSZ40 unit is a storage container that is made available to the host operating system. A unit designator must be given to a storage container for the host operating system to recognize the container. The ADD UNIT command is used to give the *container-name* a unit designator as follows:

```
HSZ> ADD UNIT unit-designator container-name
```

The container-name must be a valid container. The unit designator for a disk unit must have the following format:

```
DTZL
```

where: the first character must be a ''D'' for disk.

the ''TZL'' can be from 1 to 3 numeric characters with the following restrictions:

- The ''T'' character must be one of the host side SCSI IDs assigned to the HSZ array controller. That is, if the controller has host side SCSI IDs of 0, 1, 2, and 3, the ''T'' character can only take on a value of 0, 1, 2, or 3.
- The ''Z'' character must be zero (0) or not used. Not used implies zero (0).
- The ''L'' character can be a number between 0-7 or not used. Not used implies zero (0).

An HSZ40 array controller can present 8 units per Target ID. A controller configured with 4 host side SCSI IDs can present a maximum of 32 units to the DEC OSF/1 host operating system. The units refer to the containers. The containers can be a single device or multi-device containers, such as RAIDset or stripeset, or mirrorset containers.

Example 8–9 Controller Host Side SCSI IDs of 0, 1, 2, and 3

```
HSZ> ADD UNIT D0 DISK100   (for single device)
HSZ> ADD UNIT D000 DISK100 (for single device)
HSZ> ADD UNIT D100 R0      (for RAIDset)
HSZ> ADD UNIT D200 S0      (for Stripeset)
HSZ> ADD UNIT D307 DISK650 (for single device)
```

The HSZ40 unit designator is used to calculate the DEC OSF/1 *minor number* that is used in creating the DEC OSF/1 Device Special File for an HSZ40 unit. This minor number will be used in the *mknod utility* to associate a DEC OSF/1 device name with an HSZ40 unit.

8.13 DEC OSF/1 Special Files

Before an HSZ40 unit can be accessed by the DEC OSF/1 operating system, DEC OSF/1 device special files must be created to associate a DEC OSF/1 device name with the HSZ40 unit. Also, each individual partition that is going to be used on the HSZ40 unit, must have its own device special file.

This manual uses an OSF/1 device naming scheme for HSZ40 units that uses the following format: *rzxnny*.

The *x* should be one alphabetic character between *a* - *h*. Each character represents the host side LUN that is part of an HSZ40 unit designator. That is:

a = LUN 0
b = LUN 1
c = LUN 2
d = LUN 3
e = LUN 4
f = LUN 5
g = LUN 6
h = LUN 7

The *nn*is a number. This number is calculated using the following formula:

```
( 8 * Host Side SCSI Bus #) + (Target ID from HSZ40 unit designator)
```

The *y* should be an alphabetic character that denotes the partition. Its value must be from a - h.

An example is *rza18c*. This is the *c* partition on LUN 0 for an HSZ40 unit that is accessed through host side SCSI bus # 2. The HSZ40 is Target ID 2 on that host side SCSI bus. Therefore, the HSZ40 unit designator is D200.

Another example is *rzh44b*. This is the *b* partition on LUN 7 for an HSZ40 unit that is accessed through host side SCSI bus # 5. The HSZ40 is Target ID 4 on that Host Side SCSI bus. Therefore, the HSZ40 unit designator is D407.

This naming scheme is used throughout this chapter. However, be aware that DEC OSF/1 device naming schemes do not have to follow this format. This particular naming scheme was chosen to avoid conflicts with the DEC OSF/1 default SCSI device naming conventions.

Each individual partition of a DEC OSF/1 disk device must have a Character Device Special file and a Block Mode Device Special file.

The default naming format that is used is *rzxxx* for Block Mode Device Special files and *rrzxxx* for Character Mode Device Special files, where the *xxx* denotes a number.

DEC OSF/1 Device Special files as used in an HSZ40 controller subsystem, associate a disk device name with an HSZ40 unit.

8.13.1 Creating a Device Special File

The following information is required to create the Device Special files for an HSZ40 unit.

1. SCSI bus number of the host side SCSI bus.
2. Target ID of the HSZ40 unit as shown in the HSZ40 unit number
3. LUN of the HSZ40 unit as shown in the HSZ40 unit number
4. Partition for the device, a - h.

The Device Special files are created by invoking the DEC OSF/1 *mknod utility* in the /usr/sbin directory.

The Device Special files must be located in the /dev directory on the DEC OSF/1 host operating system. Before invoking the mknod utility ensure that the current working directory is /dev.

The format for invoking the mknod utility is:

```
/usr/sbin/mknod OSF/1 device-name  b or c  major-number  minor-number
```

The major number for HSZ40 disk units is always ‘‘8.’’ The minor number is calculated as follows:

Example 8–10 Calculating the Minor Number for Device Special Files

```
(16384 * Host Side SCSI Bus Number) + (1024 * Target ID) + (64 * LUN) + x
```

The *x* in the formula is the partition number as follows:

```
a = 0
b = 1
c = 2, and so on.
```

The following example shows how to use mknod to create DEC OSF/1 device special files for HSZ40 units.

Example 8–11 Mknod Examples

The DEC OSF/1 device naming scheme of *rzxnny* that was presented earlier is used.

The major number of HSZ40 units is always 8

The minor number is calculated as follows:

```
minor number = (bus# * 16384) + (target ID # * 1024) + (LUN# * 64) + x
```

For an HSZ40 unit on host side SCSI bus # 2 and an HSZ40 unit designator of D200, the following DEC OSF/1 command is used:

(continued on next page)

Example 8–11 (Cont.) Mknod Examples

```
OSF/1> cd /dev
OSF/1> /usr/sbin/mknod rza18a  b 8 34816

This creates the block mode device special file in the /dev directory
for the "a" partition for this HSZ40 unit.  The device special file would
have the name rza18a.

OSF/1> cd /dev
OSF/1> /usr/sbin/mknod rrza18a c 8 34816

This creates the character mode device special file in the /dev
directory for the a partition for this HSZ40 unit.
The device special file would have the name rrza18a.
```

WARNING

When using the mknod utility, no verification process exists to ensure that the correct minor number was used. If a calculation error was made and the wrong minor number is used, the mknod utility will not signal any errors. The result of using that DEC OSF/1 device name would be unpredictable, such as accessing the wrong partition, accessing the wrong HSZ40 unit, and so forth.

Take care when using the mknod utility.

If there are many HSZ40 units to configure, a DEC OSF/1 block mode special file and a character mode special file must be created for every partition on those HSZ40 units.

Currently, no script file comes with the DEC OSF/1 operating system that creates all special files for all HSZ40 units.

However, there is a script file that comes with the DEC OSF/1 operating system. It is called MAKEDEV. This utility can create some special files, providing a specific naming format is used. However, MAKEDEV can only be used for those HSZ40 units that have a LUN of ‘‘0’’ in the unit designator. That is, MAKEDEV can only be used on those units whose "‘‘L’’ character is zero (0).

For example, if an HSZ40 unit has the unit designator D201, MAKEDEV should not be used (because the LUN designator is one (1)).

8.14 MAKEDEV Utility

The MAKEDEV utility is located in the /dev directory. The text in this section is based upon current versions of DEC OSF/1 including Version 3.2–4.

MAKEDEV is a script that can be used to create device special files. However, it requires that a specific naming format be used. For SCSI devices it requires the following format:

```
rzxxx
```

where *xxx* can only be numeric characters, for example: rz0, rz10, rz130, and so forth.

The *xxx* number determines the SCSI host side bus number and the SCSI target ID. The LUN is assumed to be 0 in all cases. The calculations are as follows:

```
SCSI host side bus number =  Integer of ( xxx / 8 )
```

The remainder of the above division, if any, is the target ID.

MAKEDEV calculates the minor number, based upon the same calculation used in the previous examples, except that the LUN is always 0:

Example 8–12 How MAKEDEV Calculates the Minor Number

```
(16384 * SCSI Host Bus # ) + (Target ID * 1024) + (LUN * 64) + Partition

Using a unit name of RZ16  = 16 is the xxx

SCSI host side bus number = ( 16 / 8 ) = 2  with a remainder of 0.

Minor number for rz16a = ( 16384 * 2 ) + ( 0 * 1024 ) + ( 0 * 64 ) + 0 = 32768
```

MAKEDEV then invokes the mknod utility using the major number associated with that device type and the calculated minor number. It creates all special files for all partitions, both block mode and character mode.

If a DEC OSF/1 device name of rz16 was used, what HSZ40 unit would MAKEDEV assume? Remember that an HSZ40 unit has the designator DTZL:

```
T = Target ID
Z = 0
L = LUN
```

Remember that rz16 was on SCSI host side bus number 2, target ID 0, and a LUN of 0.

The rz16 device would relate to HSZ40 UNIT D000 or D0 that is connected to the host adapter on SCSI host side bus number 2.

If the MAKEDEV utility is used to create special files, give the device a DEC OSF/1 device-name that will produce the correct minor number. Remember, MAKEDEV cannot be used to create special files for HSZ40 units whose unit designators do not end in zero (0). For example, MAKEDEV cannot be used for HSZ40 unit D101. This would be target ID 1, but LUN 1. MAKEDEV always assumes LUN to be zero (0).

When using the MAKEDEV utility, the current working directory should be /dev. To invoke the MAKEDEV utility enter the following command (this is an example):

```
/dev/MAKEDEV rz16
```

As another example, if a device name of rz161 was chosen and MAKEDEV is used to create the special files. What HSZ40 unit would MAKEDEV assume?

```
SCSI host side bus number = ( 161 / 8 ) = 20 with a remainder of 1

The Target ID is then equal to this remainder, which is 1.

LUN is always 0, so using the DTZL HSZ40 unit designator formatting scheme,
this would be D100 on the HSZ40 on the host adapter on Host
Side SCSI bus 20.
```

The point of these examples is to show that arbitrary DEC OSF/1 device names cannot be chosen if MAKEDEV is used to create the special files. The minor number that MAKEDEV will calculate must identify the correct HSZ40 Unit on the correct host side SCSI bus.

8.15 Helpful Utilities

The DEC OSF/1 **file** utility can be used to determine if an HSZ40 unit can be accessed from the DEC OSF/1 host operating system.

For this example, the HSZ40 has a unit designator of D101. From the HSZ40 CLI enter the following command:

```
HSZ> Set D101 noread
```

This command disables the read cache for the unit. This allows for a visual indication that the unit is being accessed. The information should be accessed from the unit rather than from the cache (if the information is in cache).

Make sure that the unit's read cache is reenabled when the testing is completed by entering the following command:

```
HSZ> Set D101 read
```

If an HSZ40 unit has write-back cache enabled, first the write-back cache for the unit must be disabled, then the read cache is disabled:

```
HSZ> Set D101 nowriteback
HSZ> Set D101 noread
```

Make sure that the unit's write-back and read cache are reenabled when the testing is complete.

From the DEC OSF/1 host operating system console enter the following command:

```
/usr/bin/file /dev/xxxx
```

The *xxxx* represents the DEC OSF/1 Character Mode device special file that represents a partition on the HSZ40 unit, for example:

```
/usr/bin/file /dev/rrzb17a
```

In this example, the special file for rrzb17a should already be created. Also, the partition that is chosen should have the correct disk label.

The device activity indicator (green light) will illuminate on the device. If the unit is a multidevice container, only one of the devices from that container illuminates. The DEC OSF/1 operating system should display something like the following output after the command is entered:

```
/dev/rrzb17a character special (8/mmmm) SCSI # n HSZ40 disk #xxx (SCSI ID #t)

8 is the major number
mmmm is the minor number
n is the SCSI host side bus number
t is the target ID as used in the HSZ40 unit DTZL
T in the DTZL HSZ40 unit matches the "t" from the file command
xxx is the Disk Number discussed in a previous section

If an error occurs, such as:

     file:  Cannot get file status on /dev/mmmm
     /dev/mmmm:  cannot open for reading

This error usually indicates that the device special
file that matches "mmmm" does not exist in the /dev directory.
```

If the only output that is returned from the file command is the major and minor number, then either the device is not answering or the device special file does not have the correct minor number. Check the minor number to be sure that it matches the correct SCSI host side bus number and the correct HSZ40 target ID and LUN from the HSZ40 unit designator.

If an error occurs regarding the disk label, there is good probability that the device can be accessed. The device activity indicator illuminate. This error can usually be fixed by creating the disk label through the use of the DEC OSF/1 disklabel utility. However, be sure that the user is aware of the proper use of the disklabel utility. Only, a well-informed system manager should use this utility.

8.16 SCU Utility

This section discusses the SCSI CAM Utility program. It is located in the /sbin directory. It is documented in the REF Pages.

This utility can be used to see what HSZ40 units are available to the DEC OSF/1 operating system, for example:

```
/sbin/scu -f /dev/mmmm

The mmmm represents the Character Mode special file
name associated with an HSZ40 unit.

**********************************************************************

/sbin/scu -f /dev/rrza16a

SCU> Show Nexus

This SCU command gives you SCSI bus information in the following
format:

Device Nexus: Bus: n
Target: t
Lun: L
Device Type - direct access
(In this example the device type for a disk is direct access.)
**********************************************************************
```

The SCU command, **scan edt**, causes a polling for all devices on the host side SCSI buses. This allows you to show what devices are available from all host side SCSI buses. The special files do not have to exist for SCU to see the devices.

```
SCU> scan edt

SCU> show edt

    CAM Equipment Device Table (EDT) Information:

    Bus: 0, Target: 3, Lun: 0, Device Type: Direct Access
    Bus: 0, Target: 3, Lun: 1, Device Type: (not present)
    Bus: 0, Target: 3, Lun: 2, Device Type: (not present)
    Bus: 0, Target: 3, Lun: 3, Device Type: (not present)
    Bus: 0, Target: 3, Lun: 4, Device Type: (not present)
    Bus: 0, Target: 3, Lun: 5, Device Type: (not present)
    Bus: 0, Target: 3, Lun: 6, Device Type: (not present)
    Bus: 0, Target: 3, Lun: 7, Device Type: (not present)
    Bus: 0, Target: 4, Lun: 0, Device Type: Read-Only Direct Access
    Bus: 0, Target: 4, Lun: 1, Device Type: (not present)
    Bus: 0, Target: 4, Lun: 2, Device Type: (not present)
    Bus: 0, Target: 4, Lun: 3, Device Type: (not present)
    Bus: 0, Target: 4, Lun: 4, Device Type: (not present)
    Bus: 0, Target: 4, Lun: 5, Device Type: (not present)
    Bus: 0, Target: 4, Lun: 6, Device Type: (not present)
    Bus: 0, Target: 4, Lun: 7, Device Type: (not present)
    Bus: 2, Target: 0, Lun: 0, Device Type: Direct Access
    Bus: 2, Target: 0, Lun: 1, Device Type: (not present)
    Bus: 2, Target: 0, Lun: 2, Device Type: (not present)
    Bus: 2, Target: 0, Lun: 3, Device Type: (not present)
    Bus: 2, Target: 0, Lun: 4, Device Type: (not present)
    Bus: 2, Target: 0, Lun: 5, Device Type: (not present)
    Bus: 2, Target: 0, Lun: 6, Device Type: (not present)
    Bus: 2, Target: 0, Lun: 7, Device Type: (not present)
    Bus: 2, Target: 1, Lun: 0, Device Type: Direct Access
    Bus: 2, Target: 1, Lun: 1, Device Type: Direct Access
    Bus: 2, Target: 1, Lun: 2, Device Type: Direct Access
    Bus: 2, Target: 1, Lun: 3, Device Type: Direct Access
********************************************************************************
```

This example display shows all host side SCSI buses available and the devices as seen on those buses. You should see all HSZ40 units. For example, an HSZ40 unit D103 on host side SCSI bus 2, is:

```
Bus: 2, Target: 1, Lun: 3, Device Type: Direct Access
```

HSZ40 unit D307 on host side SCSI bus 4 would be:

```
Bus: 4, Target: 3, Lun: 7, Device Type: Direct Access
```

8.17 Configuration File Entries for HSZ40 Units

This discussion uses the DEC OSF/1 device naming format of *rzxnny* that was discussed previously.

Entries in an DEC OSF/1 configuration file for HSZ40 units have the following format:

```
device disk  "name"    at scsi"z"   drive   "number"

The "name" is in the format rznn as calculated in the previous
section.  The "z" in the entry "at scsiz" is the host side SCSI bus
number.
```

There should be eight entries for this device. Only the drive number will change for each entry.

As an example, the configuration file for the HSZ40 unit designators D000 to D007 on host side SCSI bus # 2 are constructed as follows:

The name entry is *rznn*. The *nn* is calculated as:

```
( 8 * Host Side SCSI Bus # ) + ( Target ID) = (8 * 2) + 0 = 16.
```

The drive number for each HSZ40 unit is calculated using the following formula:

```
(64 * Host Side SCSI #) + (8 * Target ID from HSZ40 Unit) + LUN of HSZ40 unit
```

Only the drive number of the first device needs to be calculated using the formula. The drive numbers for the remaining devices are calculated by adding 1 to the previous device's drive number.

The entries in the DEC OSF/1 configuration file might be as follows:

```
bus             tcds0      at tc0       slot  6 vector    tcdsintr
bus             tza0       at tc0       slot  5 vector    tzaintr
controller      scsi2      at tza0      slot  0
device disk     rz16       at scsi2     drive     128
device disk     rz16       at scsi2     drive     129
device disk     rz16       at scsi2     drive     130
device disk     rz16       at scsi2     drive     131
device disk     rz16       at scsi2     drive     132
device disk     rz16       at scsi2     drive     133
device disk     rz16       at scsi2     drive     134
device disk     rz16       at scsi2     drive     135
```

For HSZ40 units D400 to D407 on host side SCSI Bus # 5, the configuration file is constructed as follows:

The name entry would be *rznn*. The *nn* is calculated as:

```
( 8 * Host Side SCSI Bus #) + ( Target ID) = ( 8 * 5 ) + 4 = 44.
```

The drive number for each HSZ40 unit is calculated using the following formula:

```
(64 * Host Side SCSI #) + (8 * Target ID from HSZ40 Unit) + LUN of HSZ40 unit
```

For example:

```
bus             tcds0      at tc0       slot  6 vector    tcdsintr
bus             tza0       at tc0       slot  5 vector    tzaintr
controller      scsi5      at tza0      slot  0
device disk     rz44       at scsi5     drive     352
device disk     rz44       at scsi5     drive     353
device disk     rz44       at scsi5     drive     354
device disk     rz44       at scsi5     drive     355
device disk     rz44       at scsi5     drive     356
device disk     rz44       at scsi5     drive     357
device disk     rz44       at scsi5     drive     358
device disk     rz44       at scsi5     drive     359
```

8.18 Using iostat and Other Utilities

Some utilities do not recognize nonnumeric naming formats. Also, some utilities do not recognize a device if the device name has more than two numbers after the *rz*, or the utility may truncate the numbers. For example: rz445 might be seen as rz44. Some utilities cannot differentiate between rz446 or rz448. Also some utilities do not recognize the *rzxnny* format that has been described in this chapter, such as rza44a.

One such utility is iostat. If all eight LUNs for an HSZ40 Target ID are configured into units, and if all eight entries exist in the configuration file, then the following procedure can be used for iostat.

```
The iostat utility is invoked using the following format:

    iostat rznn  s  t

The nn is equal to the numeric value that is used in
the DEC OSF/1 device name.  Do not use the rzxnn,
where the x is the alphabetic character that denotes
the LUN number.  Iostat ignores the alphabetic character.

The s denotes the amount of time, in seconds, between screen
updates. This is optional.

The t denotes the total number of screen updates. It
is also optional.

The output from iostat shows all eight devices that use the
numeric number nn.  If you want to see activity on the LUN 0
for rznn, use the information from the first column that shows
the rznn name, as viewed from left to right. To see activity from
LUN 1 on rznn use the second column, and so forth.

Your terminal screen width should be set to 132.

************************************************************************

# iostat rz16 5 4

rz16     rz16     rz16     rz16     rz16     rz16     rz16     rz16
bps tps  bps tps  bps tps  bps tps  bps tps  bps tps  bps tps  bps tps
 0   0    0   0    0   0    0   0    0   0    0   0    0   0  126   3
 0   0    0   0    0   0    0   0    0   0    0   0    0   0 1618  34
 0   0    0   0    0   0    0   0    0   0    0   0    0   0 1639  34
 0   0    0   0    0   0    0   0    0   0    0   0    0   0 1610  34

************************************************************************

The above display shows activity on LUN 7 that relates to device rzh16.
```

The *nn* is equal to the numeric value that is used in the DEC OSF/1 device name. Do not use the rzxnny format because iostat ignores the *x* and the *y*.

The output from iostat shows all eight devices that use the numeric number *nn*. If you wish to see activity on the LUN 0 for *rznn*, use the information from the first column that shows the rznn name, as viewed from left to right. To see activity from LUN 1 on rznn use the second column, and so forth.

Currently this is the only way to use the iostat utility. This is why all LUNs from 0 to 7 should be listed in the configuration file.

What happens if all eight LUNs are not configured as units?

```
**************************************************************************

   # iostat rz16 5 4

       tty     rz3     rz4     rz16     rz16      cpu
     tin tout tps  bps tps  bps tps  bps tps   us ni sy id
      0   0    0   0    0   0    0   126   3   1   0  2 97
      0   0    0   0    0   0    0  1618  34   1   0  2 98
      0   0    0   0    0   0    0  1639  34   1   0  2 98
      0   0    0   0    0   0    0  1610  34   1   0  2 98

**************************************************************************
```

If all eight LUNs for a Target ID are not configured on an HSZ40, then the number of entries seen in iostat will be equal to the number of units that are configured for a HSZ40 Target ID.

In the above example, only units D0 and D7 are configured on the HSZ40. The corresponding DEC OSF/1 Block Mode device names are rza16 and rzh16. The example shows the output from iostat given the following conditions:

- All eight entries for rz16 are in the configuration file
- Only D0 and D7 are configured on the HSZ40
- The corresponding DEC OSF/1 Block Mode device names are rza16 and rzh16

The method for reading the output from iostat is to read the LUNs in ascending order from left to right. You must be aware of the available LUNs. In the previous example the user must know that only rza16 and rzh16 exist and that they refer to LUN 0 and LUN 7.

Therefore, the method for reading the above example, is:

- The first rz16, reading from left to right, relates to rza16 or LUN 0.
- The second rz16, relates to rzh16 or LUN 7.

8.19 Using genvmunix

If **genvmunix** is used to initialize the system, and if **doconfig** is used to build a new configuration file, then the new configuration file only lists the HSZ40 LUN 0 units. Also the naming format for those LUN 0 units is in the format of *rznn*.

The *nn* represents the numeric number as used in the following formula:

```
( 8 * Host Side SCSI Bus #) + (Target ID from HSZ40 unit number)
```

Nonzero (0) LUNs do not appear in the new configuration file.

Before rebuilding a configuration file using genvmunix, any existing customized configuration file that was created to include HSZ40 units should be saved. Then after the new configuration file is rebuilt, the existing entries from the customized configuration file can be added to the new configuration file.

A better procedure would be to extract just the HSZ40 device-specific entries into a separate file. After the new configuration file is built from a genvmunix initialization, merge this separate file and the new configuration file together. The result is that this new file will contain those specific HSZ40 device names.

Then use doconfig with the *-c* option, specifying the merged configuration file name.

The result is a kernel that contains the specific HSZ40 units that relate to the desired naming format.

A

Option Order Numbers

This appendix contains order numbers for controller options and preconfigured subsystems.

Table A–1 lists the HSJ30 array controller options.

Table A–1 HSJ30 Array Controller Options

Order Number	Description
HSJ30–AA	StorageWorks Array Cntrl 130c; 18 SCSI–2 Disk/Tape/Optical Device support; RAID 0, Base Firmware.
HSJ30–AD	StorageWorks Array Cntrl 130c; 18 SCSI–2 Disk/Tape/Optical Device support; 16 MB Read Cache; RAID 0, Base Firmware.
HSJ30-AF	StorageWorks Array Cntrl 130c; 18 SCSI–2 Disk/Tape/Optical Device support; 32 MB Read Cache; RAID 0, Base Firmware.
HSJ30–XE	HSJ30 array controller read cache replacement for the 16 MB read cache that comes with the HSJ30–AD option, a 32 MB read cache module; mandatory return of installed 16 MB read cache required.
HSJ3X–AA	HSJ30 to HSJ40 array controller upgrade. Increase connectivity from maximum of 18 to 36 devices.
HSJ30–XD	HSJ30 array controller 16 MB read cache module option for HSJ30–AA.
HSJ30–XF	HSJ30 array controller 32 MB read cache module option for HSJ30–AA.
HSJ30–YC	This is the batteries, battery bracket, and write-cache option license.
QA–0W9AA–HS	SWKS HSJ MSC PCRM Media/DocKit.

Table A–2 lists the HSJ40 array controller options.

Table A–2 HSJ40 Array Controller Options

Order Number	Description
HSJ40–AD	StorageWorks Array Cntrl 140c; 36 SCSI–2 Disk/Tape/Optical Device support; 16 MB Read Cache; RAID 0, Base Firmware.
HSJ40–AF	StorageWorks Array Cntrl 140c; 36 SCSI–2 Disk/Tape/Optical Device support; 32 MB Read Cache; RAID 0, Base Firmware.
HSJ40–XE	HSJ40 array controller read cache replacement for the 16 MB read cache that comes with the HSJ40–AD option, a 32 MB read cache module; mandatory return of installed 16 MB read cache required.
HSJ40–YA	16 MB write-back cache module option.
HSJ40–YC	This is the batteries, battery bracket, and write-cache option license.
QA–0W9AA–HS	SWKS HSJ MSC PCRM Media/Doc Kit.

Table A–3 lists the HSJ42 subsystem options.

Table A–3 HSJ42 Array Controller Subsystem Options

Order Number	Description
HSJ42–AD	Two StorageWorks Array Cntrl 140c; 36 SCSI–2 Disk/Tape/SSD /Optical Device support; 32 MB total Read Cache; RAID 0, Base Firmware.
HSJ42–AF	Two StorageWorks Array Cntrl 140c; 36 SCSI–2 Disk/Tape/SSD /Optical Device support; 64 MB total Read Cache; RAID 0, Base Firmware.

Table A–4 lists the HSJ44 subsystem options.

Table A–4 HSJ44 Array Controller Subsystem Options

Order Number	Description
HSJ44–AD	Four StorageWorks Array Cntrl 140c; 72 SCSI–2 Disk/Tape/SSD /Optical Device support; 64 MB total Read Cache; RAID 0, Base Firmware.
HSJ44–AF	Four StorageWorks Array Cntrl 140c; 72 SCSI–2 Disk/Tape/SSD /Optical Device support; 128 MB total Read Cache; RAID 0, Base Firmware.

Table A–5 lists the HSD30 controller options.

Table A–5 HSD30 Controller Options

Order Number	Description
HSD30–AA	StorageWorks Array Cntrl 130d; 18 SCSI–2 Disk/Tape/SSD/Optical Device support; RAID 0, Base Firmware.
HSD30–AD	StorageWorks Array Cntrl 130d; 18 SCSI–2 Disk/Tape/SSD/Optical Device support; 16 MB Read Cache; RAID 0, Base Firmware.
HSD30–AF	StorageWorks Array Cntrl 130d; 18 SCSI–2 Disk/Tape/SSD/Optical Device support; 32 MB Read Cache; RAID 0, Base Firmware.
HSD30–XD	HSD30 controller 16 MB read cache option for HSD30–AA.
HSD30–XE	HSD30 controller read cache replacement for the 16 MB read cache that comes with the HSD30–AD option, a 32 MB read cache module; mandatory return of installed 16 MB read cache required.
HSD30–XF	HSD30 controller 32 MB read cache option for HSD30–AA, 32 MB total.
HSD30–YX	HSZ40 controller write-back cache option – includes two write-back cache batteries, a battery bracket, and a write-back cache option license.
QA–2YHAA–HS	SWKS HSD30 MSC PCRM Media/Doc Kit.

Table A–6 lists the HSZ40–A*x* controller options.

Table A–6 HSZ40–A*x* Controller Options

Order Number	Description
HSZ40–AA	StorageWorks Array Cntrl 140z; 42 SCSI–2 Disk Device support; No Cache; RAID 0, Base Firmware.
HSZ40–AD	StorageWorks Array Cntrl 140z; 42 SCSI–2 Disk Device support; 16 MB Read Cache; RAID 0, Base Firmware.
HSZ40–AF	StorageWorks Array Cntrl 140z; 42 SCSI–2 Disk Device support; 32 MB Read Cache; RAID 0, Base Firmware.
HSZ40–XD	16 MB read cache module option for HSZ40–AA.
HSZ40–XF	32 MB read cache module option for HSZ40–AA.
HSZ40–XE	HSZ40 controller read cache replacement for the 16 MB read cache that comes with the HSJ40–AD option, a 32 MB read cache module; mandatory return of installed 16 MB read cache required.
HSZ40–YX	HSZ40 controller write-back cache option – this kit includes two write-back cache batteries, a battery bracket, and a write-back cache license.
QA–2YJAA–HS	SWKS HSZ40 MSC PCRM Kit.

Table A–7 lists the HSZ40–B*x* controller options.

Table A–7 HSZ40–B*x* Controller Options

Order Number	Description
HSZ40–BA	StorageWorks Array Cntrl 140z; 42 SCSI–2 Disk Device support; No Cache; RAID 0, Base Firmware.
HSZ40–BD	StorageWorks Array Cntrl 140z; 42 SCSI–2 Disk Device support; 16 MB Read Cache; RAID 0, Base Firmware.
HSZ40–BF	StorageWorks Array Cntrl 140z; 42 SCSI–2 Disk Device support; 32 MB Read Cache; RAID 0, Base Firmware.
HSZ40–XD	16 MB read cache module option for HSZ40–BA.
HSZ40–XF	32 MB read cache module option for HSZ40–BA.
HSZ40–XE	HSZ40 controller read cache replacement for the 16 MB read cache that comes with the HSJ40–BD option, a 32 MB read cache module; mandatory return of installed 16 MB read cache required.
HSZ40–YX	HSZ40 controller write-back cache option – this kit includes two write-back cache batteries, a battery bracket, and a write-back cache license.
QA–2YJAC–HS	SWKS HSZ40 MSC PCRM Kit.

The SWKS MSC PCRM kits contain the following:

- One HS operating firmware array controller software product description (SPD) (controller-specific).
- One *HS array controller operating firmware V2.5 release notes* (controller-specific). Refer to the related documents list in the preface of this manual for order numbers.
- One *StorageWorks Array Controllers HS Family of Array Controllers User's Guide* (Revision D01).
- One SWKS PCRM MFG (program card) appropriate for that controller using the following order numbers:
  - Order number BG–PYU60–1A (for HSJ array controllers)
  - Order number BG–Q6HL0–1A (for HSD30 array controllers)
  - Order number BG–QHD30–1A (for HSZ40–A*x* array controllers)
  - Order number BG–QHD30–1A (for HSZ40–B*x* array controllers)

Note

Cables must be ordered separately. Cable part numbers are listed in the *StorageWorks Solutions Shelf Configuration Guide*.

Table A–8 lists the preconfigured HSJ40 array controller subsystems currently available. Configurations can be added or deleted as the market dictates. Refer to the *Digital Systems and Options Catalog* or the *DEC Direct Hardware Catalog* for the most current order numbers.

Table A–8 HSJ40 Array Controller Preconfigured Subsystems Options

Order Number	Description
SW810–AA	StorageWorks Array 140c, 6.3 GB with 6 RZ26–VA[1] disk drives in an SW800–AA cabinet; 60 HZ, 120/208v 3-phase. Requires separately ordered HSJ40 array controller.
SW810–AB	StorageWorks Array 140c, 6.3 GB with 6 RZ26–VA[1] disk drives in an SW800–AB cabinet; 50 HZ, 220/416v 3-phase. Requires separately ordered HSJ40 array controller.
SW811–AA	StorageWorks Array 140c, 21.0 GB with 6 RZ74–VA disk drives in an SW800–AA cabinet; 60 HZ, 120/208V 3-phase. Requires separately ordered HSJ40 array controller.
SW811–AB	StorageWorks Array 140c, 21.0 GB with 6 RZ74–VA disk drives in an SW800–AB cabinet, 50 HZ, 240/416V 3-phase. Requires separately ordered HSJ40 array controller.
SW812–AA	StorageWorks Array 140c, 12.6 GB with 6 RZ28–VA[2] disk drives in an SW800–AA cabinet; 60 HZ, 120/208V 3-phase. Requires separately ordered HSJ40 array controller.
SW812–AB	StorageWorks Array 140c, 12.6 GB with 6 RZ28–VA[2] disk drives in an SW800–AB cabinet; 50 HZ, 240/416V 3-phase. Requires separately ordered HSJ40 array controller.
SW510–AC	StorageWorks Array 140c, 6.3 GB with 6 RZ26–VA[1] disk drives in an SW500–AC cabinet; 60 HZ, 120V single phase. Requires separately ordered HSJ40 array controller.
SW510–AD	StorageWorks Array 140c, 6.3 GB with 6 RZ26–VA[1] disk drives in an SW500–AD cabinet; 50 HZ, 240V single phase. Requires separately ordered HSJ40 array controller.
SW511–AC	StorageWorks Array 140c, 21.0 GB with 6 RZ74–VA disk drives in an SW500–AC cabinet; 60 HZ, 120V single phase. Requires separately ordered HSJ40 array controller.
SW511–AD	StorageWorks Array 140c, 21.0 GB with 6 RZ74–VA disk drives in an SW500–AD cabinet; 50 HZ, 240V single phase. Requires separately ordered HSJ40 array controller.
SW512–AC	StorageWorks Array 140c, 12.6 GB with 6 RZ28–VA[2] disk drives in an SW500–AC cabinet; 60 HZ, 120V single phase. Requires separately ordered HSJ40 array controller.
SW512–AD	StorageWorks Array 140c, 12.6 GB with 6 RZ28–VA[2] disk drives in an SW500–AD cabinet; 50 HZ, 240V single phase. Requires separately ordered HSJ40 array controller.

[1]The RZ26L–VA disk drive may be substituted for the RZ26–VA disk drive.

[2]The RZ28B–VA disk drive may be substituted for the RZ28–VA disk drive.

B

Command Line Interpreter

This appendix provides the following information:

- A comprehensive list of all CLI commands
- CLI error messages the operator may encounter
- Examples of some common CLI-based procedures

An overview of using the CLI, as well as a description of how to access and exit the CLI, is provided in Chapter 5.

B.1 CLI Commands

The following sections describe each of the valid commands in the CLI, along with their required parameters and qualifiers. Examples are given after the command format, parameters, description, and qualifiers.

ADD CDROM

Adds a CDROM drive to the list of known CDROM drives.

Format

ADD CDROM *container-name SCSI-location*

Parameters

container-name
Specifies the name that is used to refer to this CDROM drive. This name is referred to when creating units. The name must start with a letter (A–Z) and can then consist of up to eight more characters made up of letters A–Z, numbers 0–9, periods (.), dashes (-), or underscores (_), for a total of nine characters.

SCSI-location
The location of the CDROM drive to be added in the form PTL where **P** designates the port (1–6 or 1–3, depending on the controller model), **T** designates the target ID of the device, (0–6, in a nonfailover configuration, or 0–5 if the controller is in a failover configuration), and **L** designates the LUN of the device (must be 0).

When entering the PTL, at least one space must separate the the port, target, and LUN numbers.

Description

Adds a CDROM drive to the list of known CDROM drives and names the drive. This command must be used when a new SCSI–2 CDROM drive is to be added to the configuration.

Note

CDROMs are always set TRANSPORTABLE. They are seen as DKA devices by the OpenVMS host operating system.

Examples

1.
```
CLI> ADD CDROM CD_PLAYER 1 0 0
```

Adds a CDROM drive to port 1, target 0, LUN 0, and named CD_PLAYER.

ADD DISK

Adds a disk drive to the list of known disk drives.

Format

ADD DISK *container-name SCSI-location*

Parameters

container-name
Specifies the name that is used to refer to this disk drive. This name is referred to when creating units and stripesets. The name must start with a letter (A–Z) and can then consist of up to eight more characters made up of letters A–Z, numbers 0–9, periods (.), dashes (-), or underscores (_), for a total of nine characters.

SCSI-location
The location of the disk drive to be added in the form PTL where **P** designates the port (1–6 or 1–3, depending on the controller model), **T** designates the target ID of the device, (0–6, in a nonfailover configuration, or 0–5 if the controller is in a failover configuration), and **L** designates the LUN of the device (must be 0).

When entering the PTL, at least one space must separate the the port, target, and LUN numbers.

Description

Adds a disk drive to the list of known disk drives and names the drive. This command must be used when a new SCSI–2 disk drive is to be added to the configuration.

Qualifiers

TRANSPORTABLE
NOTRANSPORTABLE (Default)
In normal operations, the controller makes a small portion of the disk inaccessible to the host and uses this area to store metadata, which improves data reliability, error detection, and recovery. This vast improvement comes at the expense of transportability.

If NOTRANSPORTABLE is specified and there is no valid metadata on the unit, the unit must be initialized.

Note

Digital recommends that you avoid specifying TRANSPORTABLE unless transportability of disk drive or media is imperative and there is no other way to accomplish moving the data.

ADD DISK

Examples

1.
```
CLI> ADD DISK RZ26_100 1 0 0
```

   Adds a non transportable disk to port 1, target 0, LUN 0 and names it RZ26_100.

2.
```
CLI> ADD DISK DISK0 2 3 0 NOTRANSPORTABLE
```

   Adds a non transportable disk to port 2, target 3, LUN 0 and names it DISK0.

3.
```
CLI> ADD DISK TDISK0 3 2 0 TRANSPORTABLE
```

   Adds a transportable disk to port 3, target 2, LUN 0 and names it TDISK0.

ADD LOADER

Note

This command is valid for HSJ and HSD controllers only.

Adds a loader to the list of known loaders.

Format

ADD LOADER *container-name SCSI-location*

Parameters

container-name
Specifies the name that is used to refer to this loader. The name must start with a letter (A–Z) and can then consist of up to eight more characters made up of letters A–Z, numbers 0–9, periods (.), dashes (-), or underscores (_), for a total of nine characters.

SCSI-location
The location of the loader to be added in the form PTL where **P** designates the port (1–6 or 1–3, depending on the controller model), **T** designates the target ID of the device, (0–6, in a nonfailover configuration, or 0–5 if the controller is in a failover configuration), and **L** designates the LUN of the device (must be 0).

When entering the PTL, at least one space must separate the the port, target, and LUN numbers.

Description

Adds a loader to the list of known loaders and names the loader. This command must be used when a new SCSI–2 loader is to be added to the configuration.

Examples

1.
```
CLI> ADD LOADER LOAD0 2 0 0
```

Adds a loader to port 2, target 0, LUN 0 and names it LOAD0.

ADD MIRRORSET

Binds a set of physical devices to a mirrorset specified by a container name.

Format

ADD MIRRORSET *container-name disk-device-name1 [disk-device-nameN]*

Parameters

container-name

Specifies the name that is used to refer to this mirrorset container. This name is referred to when creating mirrorsets. The name must start with a letter (A–Z) and can then consist of up to eight more characters made up of letters A–Z, numbers 0–9, periods (.), dashes (-), or underscores (_), for a total of nine characters.

disk-device-name1 disk-device-nameN
The disk drives that make up this mirrorset. A mirrorset is made up of from 1 to 6 disk drives.

Description

Adds a mirrorset to the list of known mirrorsets and names the mirrorset. The number of members is set to the number of devices specified in the command. If the physical devices have never been initialized as a mirrorset, then a CLI INITIALIZE command must be issued for the mirrorset prior to binding the mirrorset to a higher level storage container.

Qualifiers

COPY=*copy_speed*
The COPY qualifier allows you to specify the speed at which mirrorset copies are performed. You may specify either NORMAL or FAST.

NORMAL uses relatively few controller resources to perform the copy, and has little impact on controller performance.

FAST uses more controller resources, which reduces the time it takes to complete the copy, but also reduces overall controller performance.

POLICY=BEST_FIT
POLICY=BEST_PERFORMANCE (Default)
NOPOLICY
The POLICY qualifier specifies the replacement policy to be used when a mirrorset member within the mirrorset fails.

BEST_FIT gives highest priority to finding a replacement device within the spareset that most closely matches the sizes of the remaining members of the mirrorset. If more than one device in the spareset is the correct size, the device that gives the best performance is selected.

BEST_PERFORMANCE (default) gives highest priority to finding a replacement device within the spareset that results in the best performance of the mirrorset (the device should be on a different port). If more than one device in the spareset has the best performance, the device that most closely matches the size of the remaining members of the mirrorset is selected.

NOPOLICY retries a failing device from the mirrorset without selecting a replacement. This causes the mirrorset to run with less than the nominal number of members until a BEST_FIT or BEST_PERFORMANCE policy is selected, or a member is manually replaced in the mirrorset.

READ_SOURCE=*read-source*

The READ_SOURCE qualifier allows you to control the read algorithm for the specified mirrorset. The following choices are allowed for read-source:

ROUND_ROBIN—Each NORMAL mirrorset member is the target of a read in sequential membership order. No preference is given to any NORMAL member. This is the default read-source.

LEAST_BUSY—The NORMAL mirrorset member with the least busy work queue is the target of the read.

device-container-name—All reads are done on *device-container-name*. If *device-container-name* fails out of the mirrorset, the READ_SOURCE algorithm reverts to LEAST_BUSY.

Examples

1.
```
CLI> ADD MIRRORSET MIRR1 DISK100 DISK210 DISK320
```

   Adds DISK100, DISK210, and DISK320 as a mirrorset with the name MIRR1.

ADD OPTICAL

Adds an optical drive to the list of known optical drives.

Format

ADD OPTICAL *container-name SCSI-location*

Parameters

container-name
Specifies the name that is used to refer to this optical drive. This name is referred to when creating units and stripesets. The name must start with a letter (A–Z) and can then consist of up to eight more characters made up of letters A–Z, numbers 0–9, periods (.), dashes (-), or underscores (_), for a total of nine characters.

SCSI-location
The location of the optical drive to be added in the form PTL where **P** designates the port (1–6 or 1–3, depending on the controller model), **T** designates the target ID of the device, (0–6, in a nonfailover configuration, or 0–5 if the controller is in a failover configuration), and **L** designates the LUN of the device (must be 0).

When entering the PTL, at least one space must separate the the port, target, and LUN numbers.

Description

Adds an optical drive to the list of known optical drives and names the drive. This command must be used when a new SCSI–2 optical drive is to be added to the configuration.

Qualifiers

TRANSPORTABLE
NOTRANSPORTABLE (Default)
In normal operations, the controller makes a small portion of the optical disk inaccessible to the host and uses this area to store metadata, which improves data reliability, error detection, and recovery. This vast improvement comes at the expense of transportability.

If NOTRANSPORTABLE is specified and there is no valid metadata on the unit, the unit must be initialized.

Note

Digital recommends that you avoid specifying TRANSPORTABLE unless transportability of optical drive or media is imperative and there is no other way to accomplish moving the data.

Examples

1.
```
CLI> ADD OPTICAL OPT0 2 3 0 NOTRANSPORTABLE
```

   Adds a non transportable optical drive to port 2, target 3, LUN 0 and names it OPT0.

2.
```
CLI> ADD OPTICAL TOPT0 3 2 0 TRANSPORTABLE
```

   Adds a transportable optical drive to port 3, target 2, LUN 0 and names it TOPT0.

ADD PASSTHROUGH

Note

This command is valid for HSJ and HSD controllers only.

Creates a command disk (passthrough) container to allow direct access to a device.

Format

ADD PASSTHROUGH *container-name device-name*

Parameters

container-name
Specifies the name that is used to refer to this passthrough container. The name must start with a letter (A–Z) and can then consist of up to eight more characters made up of letters A–Z, numbers 0–9, periods (.), dashes (-), or underscores (_), for a total of nine characters.

device-name
The device that receives passthrough commands. Only one device may be specified.

Description

Adds a passthrough container to the list of known passthrough containers and names the container. This command must be used when you want to communicate directly to a device using SCSI commands, such as a loader or a disk that is about to have new microcode downline loaded.

Examples

1.
```
CLI> ADD PASSTHROUGH PASS0 LDR421
```

Creates a passthrough container to loader LDR421 and names it PASS0.

ADD RAIDSET

Creates a RAIDset from a number of containers.

Format

ADD RAIDSET *container-name container-name1 container-name2 [container-nameN]*

Parameters

container-name
Specifies the name that is used to refer to this RAIDset. The name must start with a letter (A–Z) and can then consist of up to eight more characters made up of letters A–Z, numbers 0–9, periods (.), dashes (-), or underscores (_), for a total of nine characters.

container-name1 container-name2 container-nameN
The containers that will make up this RAIDset. A RAIDset may be made up of from 3 to 14 containers.

Description

Adds a RAIDset to the list of known RAIDsets and names the RAIDset. This command must be used when a new RAIDset is to be added to the configuration.

Qualifiers

POLICY=BEST_FIT
POLICY=BEST_PERFORMANCE (Default)
NOPOLICY
Specifies the replacement policy to use when a member within the RAIDset fails.

BEST_FIT gives highest priority to finding a replacement device within the spareset that most closely matches the sizes of the remaining members of the RAIDset. After finding the most closely matching devices, the device that gives the best performance is selected.

BEST_PERFORMANCE (default) gives highest priority to finding a replacement device within the spareset that results in the best performance of the RAIDset. After finding the best performing devices, the device that most closely matches the size of the remaining members of the RAIDset is selected.

NOPOLICY retires a failing device from the RAIDset without selecting a replacement. This causes the RAIDset to run in a reduced state until a BEST_ FIT or BEST_PERFORMANCE policy is selected, or a member is manually replaced in the RAIDset (see SET *raidset-container-name*).

RECONSTRUCT=NORMAL (Default)
RECONSTRUCT=FAST
NORECONSTRUCT
Specifies the speed at which a RAIDset will be reconstructed when a new member is added to the RAIDset or immediately after the RAIDset is initialized.

RECONSTRUCT=NORMAL (default) balances overall performance of the controller against the demand of reconstructing the RAIDset.

RECONSTRUCT=FAST reconstructs the RAIDset at the fastest rate possible resulting in some loss of performance of the controller overall.

REDUCED
NOREDUCED (Default)
REDUCED specifies that the RAIDset being added is already missing one member. Use the REDUCED keyword when moving an already reduced RAIDset from one controller to another. NOREDUCED (default) identifies that all RAIDset members that make up the RAIDset are being specified.

Examples

1. `CLI> ADD RAIDSET RAID9 DISK0 DISK1 DISK2 DISK3`

   Creates a RAIDset with four disks (DISK0, DISK1, DISK2, and DISK3). The replacement policy is BEST_PERFORMANCE.

2. `CLI> ADD RAIDSET RAID9 DISK0 DISK1 DISK2 DISK3 POLICY=BEST_FIT`

   Creates a RAIDset with four disks (DISK0, DISK1, DISK2, and DISK3). The replacement policy is BEST_FIT, as specified.

3. `CLI> ADD RAIDSET RAID9 DISK0 DISK1 DISK2 DISK3 NOPOLICY`

   Creates a RAIDset with four disks (DISK0, DISK1, DISK2, and DISK3). If a member within the RAIDset fails, a replacement will *not* be selected.

4. `CLI> ADD RAIDSET RAID9 DISK0 DISK1 DISK3 REDUCED`

   Creates a four member RAIDset with a raidset that was already reduced.

ADD SPARESET

Adds a disk drive to the spareset.

Format

ADD SPARESET *disk-container-name0 [disk-container-nameN]*

Parameters

disk-container-name0 disk-container-nameN
The disk drive container names to add to the spareset. Any number of disks may be added to the spareset using only one command.

Description

The **SPARESET** is a pool of drives available to the controller to replace failing members of RAIDsets and mirrorsets. The ADD SPARESET command adds disk drives to the spareset and initializes the metadata on the drives.

Examples

1.
```
CLI> ADD SPARESET DISK220
```
Adds one disk to the spareset.

2.
```
CLI> ADD SPARESET DISK110 DISK210 DISK320 DISK430 DISK540
```
Adds five disks to the spareset.

ADD STRIPESET

Creates a stripeset from a number of containers.

Format

ADD STRIPESET *container-name container-name1 container-name2 [container-nameN]*

Parameters

container-name
Specifies the name that is used to refer to this stripeset. The name must start with a letter (A–Z) and can then consist of up to eight more characters made up of letters A–Z, numbers 0–9, periods (.), dashes (-), or underscores (_), for a total of nine characters.

container-name1 container-name2 container-nameN
The containers that will make up this stripeset. A stripeset may be made up of from 2 to 14 containers.

Description

Adds a stripeset to the list of known stripesets and names the stripeset. This command must be used when a new stripeset is added to the configuration.

Examples

1. `CLI> ADD STRIPESET STRIPE0 DISK100 DISK110 DISK220 DISK340`

   Creates a STRIPESET with four disks (DISK100, DISK110, DISK220, and DISK340).

2. `CLI> ADD STRIPESET STRIPE1 MR1 MR2 MR3`

   Creates a STRIPESET with three members, each of which is a mirrorset.

ADD TAPE

Note

This command is valid for HSJ and HSD controllers only.

Adds a tape drive to the list of known tape drives.

Format

ADD TAPE *device-name SCSI-location*

Parameters

device-name
Specifies the name that is used to refer to this tape drive. This name is referred to when creating units. The name must start with a letter (A–Z) and can then consist of up to eight more characters made up of letters A–Z, numbers 0–9, periods (.), dashes (-), or underscores (_), for a total of nine characters.

SCSI-location
The location of the tape drive to be added in the form PTL where **P** designates the port (1–6 or 1–3, depending on the controller model), **T** designates the target ID of the device, (0–6, in a nonfailover configuration, or 0–5 if the controller is in a failover configuration), and **L** designates the LUN of the device (must be 0).

When entering the PTL, at least one space must separate the the port, target, and LUN numbers.

Description

Adds a tape drive to the list of known tape drives and names the drive. This command must be used when a new SCSI–2 tape drive is to be added to the configuration.

Examples

1.
```
CLI> ADD TAPE TAPE0 1 0 0
```

Adds a tape drive to port 1, target 0, LUN 0 and names it TAPE0.

ADD UNIT

Adds a logical unit to the controller.

Format

ADD UNIT *unit-number container-name*

Parameters

unit-number (HSJ and HSD only)
The device type letter followed by the logical unit number (0–4094) that the host uses to access the unit. The device type letter is either ''D'' for disk devices (including CDROMs) or ''T'' for tape devices. Using this format, logical unit 3, which is made up of a disk or disks (such as a stripeset), would be specified as D3, and logical unit 7, which is made up of a tape device would be T7.

unit-number (HSZ only)
The unit number determines both the target (0–7) and the LUN (0–7) from which the device is made available. The hundreds place of the unit number is the target and the ones place is the LUN. The tens place is not currently used. For example, D401 would be target 4, LUN 1; D100 would be target 1, LUN 0, and D5 would be target 0, LUN 5.

Note

The only target numbers specified in the unit number *must* have been previously specified in the SET THIS_CONTROLLER ID=(*n*1, *n*2, ...) command. You can not specifiy a target number that has not been previously specified by the SET THIS_CONTROLLER ID=(*n*1, *n*2, ...) command.

container-name
The name of the container that is used to create the unit.

Description

The ADD UNIT command adds a logical unit for the host to access. All requests by the host to the logical unit number are mapped as requests to the container specified in the ADD UNIT command.

For disk devices (and stripesets and RAIDsets built from disk devices), the metadata on the container must be initialized before a unit may be created from it. If the container's metadata cannot be found, or is incorrect, an error is displayed and the unit is not created.

Qualifiers for a Unit Created from a CDROM Drive (HSJ and HSD only)

MAXIMUM_CACHED_TRANSFER=*n*
MAXIMUM_CACHED_TRANSFER=32 (Default)
Specifies the maximum size transfer in blocks to be cached by the controller. Any transfers over this size are not cached. Valid values are 1–1024.

PREFERRED_PATH=THIS_CONTROLLER
PREFERRED_PATH=OTHER_CONTROLLER
NOPREFERRED_PATH (Default)

Note

The PREFERRED_PATH and NOPREFERRED_PATH qualifiers are valid for HSJ and HSD controllers only. The preferred path for HSZ controllers is determined by the unit number (the target portion of the unit number–the hundreds place) specified on the ADD UNIT command.

Specifies the preferred controller that the unit should be accessed through (PREFERRED_PATH=) or whether the unit may be accessed through either controller (NOPREFERRED_PATH).

The preferred path qualifier is used only if both controllers are running in a dual-redundant configuration. If one controller fails, then all the devices will be made accessible through the remaining controller, ignoring the preferred path setting.

When the failed controller is restarted, the drives automatically return to the controller specified by the preferred path qualifier.

Note

The PREFERRED_PATH qualifier may be specified on a single controller, however, the qualifier will not take effect until a second controller is added and the two controllers are configured for dual-redundancy. The second controller will inherit any PREFERRED_PATH settings, and the two controllers will operate using the preset PREFERRED_PATH options.

READ_CACHE (Default)
NOREAD_CACHE
Enables and disables the controller's read cache on this unit.

RUN (Default)
NORUN
Enables and disables a unit's availibility to the host. When RUN (default) is specified, the devices that make up the unit will be spun up and the unit will be made available to the host. If NORUN is specified, the devices that make up the unit will still be spun up, but the unit will not be made available to the host.

Qualifiers for a Unit Created from a TRANSPORTABLE Disk Drive

MAXIMUM_CACHED_TRANSFER=*n*
MAXIMUM_CACHED_TRANSFER=32 (Default)
Specifies the maximum size transfer in blocks to be cached by the controller. Any transfers over this size are not cached. Valid values are 1–1024.

PREFERRED_PATH=THIS_CONTROLLER
PREFERRED_PATH=OTHER_CONTROLLER
NOPREFERRED_PATH (Default)

Note

The PREFERRED_PATH and NOPREFERRED_PATH qualifiers are valid for HSJ and HSD controllers only. The preferred path for HSZ controllers is determined by the unit number (the target portion of the unit number–the hundreds place) specified on the ADD UNIT command.

Specifies the preferred controller that the unit should be accessed through (PREFERRED_PATH=) or whether the unit may be accessed through either controller (NOPREFERRED_PATH).

The preferred path qualifier is used only if both controllers are running in a dual-redundant configuration. If one controller fails, then all the devices will be made accessible through the remaining controller, ignoring the preferred path setting.

When the failed controller is restarted, the drives automatically return to the controller specified by the preferred path qualifier.

Note

The PREFERRED_PATH qualifier may be specified on a single controller, however, the qualifier will not take effect until a second controller is added and the two controllers are configured for dual-redundancy. The second controller will inherit any PREFERRED_PATH settings, and the two controllers will operate using the preset PREFERRED_PATH options.

READ_CACHE (Default)
NOREAD_CACHE
Enables and disables the controller's read cache on this unit.

RUN (Default)
NORUN
Enables and disables a unit's availibility to the host. When RUN (default) is specified, the devices that make up the unit will be spun up and the unit will be made available to the host. If NORUN is specified, the devices that make up the unit will still be spun up, but the unit will not be made available to the host.

WRITE_PROTECT
NOWRITE_PROTECT (Default)
Enables and disables write protection of the unit.

Qualifiers for a Unit Created from a NOTRANSPORTABLE Disk Drive

MAXIMUM_CACHED_TRANSFER=*n*
MAXIMUM_CACHED_TRANSFER=32 (Default)
Specifies the maximum size transfer in blocks to be cached by the controller. Any transfers over this size are not cached. Valid values are 1–1024.

PREFERRED_PATH=THIS_CONTROLLER
PREFERRED_PATH=OTHER_CONTROLLER
NOPREFERRED_PATH (Default)

Note

The PREFERRED_PATH and NOPREFERRED_PATH qualifiers are valid for HSJ and HSD controllers only. The preferred path for HSZ controllers is determined by the unit number (the target portion of the unit number–the hundreds place) specified on the ADD UNIT command.

Specifies the preferred controller that the unit should be accessed through (PREFERRED_PATH=) or whether the unit may be accessed through either controller (NOPREFERRED_PATH).

The preferred path qualifier is used only if both controllers are running in a dual-redundant configuration. If one controller fails, then all the devices will be made accessible through the remaining controller, ignoring the preferred path setting.

When the failed controller is restarted, the drives automatically return to the controller specified by the preferred path qualifier.

Note

The PREFERRED_PATH qualifier may be specified on a single controller, however, the qualifier will not take effect until a second controller is added and the two controllers are configured for dual-redundancy. The second controller will inherit any PREFERRED_PATH settings, and the two controllers will operate using the preset PREFERRED_PATH options.

READ_CACHE (Default)
NOREAD_CACHE
Enables and disables the controller's read cache on this unit.

RUN (Default)
NORUN
Enables and disables a unit's availibility to the host. When RUN (default) is specified, the devices that make up the unit will be spun up and the unit will be made available to the host. If NORUN is specified, the devices that make up the unit will still be spun up, but the unit will not be made available to the host.

WRITE_PROTECT
NOWRITE_PROTECT (Default)
Enables and disables write protection of the unit.

WRITEBACK_CACHE
NOWRITEBACK_CACHE (Default)
Enables and disables the controller's write-back cache on this unit.

Note

It may take up to 5 minutes to flush unwritten data from the write-back cache once you disable write-back caching.

Note

When initially added, NOWRITEBACK_CACHE is the default.

Qualifiers for a Unit Created from a TRANSPORTABLE Optical Drive

MAXIMUM_CACHED_TRANSFER=*n*
MAXIMUM_CACHED_TRANSFER=32 (Default)
Specifies the maximum size transfer in blocks to be cached by the controller. Any transfers over this size are not cached. Valid values are 1–1024.

PREFERRED_PATH=THIS_CONTROLLER
PREFERRED_PATH=OTHER_CONTROLLER
NOPREFERRED_PATH (Default)

Note

The PREFERRED_PATH and NOPREFERRED_PATH qualifiers are valid for HSJ and HSD controllers only. The preferred path for HSZ controllers is determined by the unit number (the target portion of the unit number–the hundreds place) specified on the ADD UNIT command.

Specifies the preferred controller that the unit should be accessed through (PREFERRED_PATH=) or whether the unit may be accessed through either controller (NOPREFERRED_PATH).

The preferred path qualifier is used only if both controllers are running in a dual-redundant configuration. If one controller fails, then all the devices will be made accessible through the remaining controller, ignoring the preferred path setting.

When the failed controller is restarted, the drives automatically return to the controller specified by the preferred path qualifier.

Note

The PREFERRED_PATH qualifier may be specified on a single controller, however, the qualifier will not take effect until a second controller is added and the two controllers are configured for dual-redundancy. The second controller will inherit any PREFERRED_PATH settings, and the two controllers will operate using the preset PREFERRED_PATH options.

READ_CACHE (Default)
NOREAD_CACHE
Enables and disables the controller's read cache on this unit.

RUN (Default)
NORUN
Enables and disables a unit's availibility to the host. When RUN (default) is specified, the devices that make up the unit will be spun up and the unit will be made available to the host. If NORUN is specified, the devices that make up the unit will still be spun up, but the unit will not be made available to the host.

WRITE_PROTECT
NOWRITE_PROTECT (Default)
Enables and disables write protection of the unit.

Qualifiers for a Unit Created from a NOTRANSPORTABLE Optical Drive

MAXIMUM_CACHED_TRANSFER=*n*
MAXIMUM_CACHED_TRANSFER=32 (Default)
Specifies the maximum size transfer in blocks to be cached by the controller. Any transfers over this size are not cached. Valid values are 1–1024.

PREFERRED_PATH=THIS_CONTROLLER
PREFERRED_PATH=OTHER_CONTROLLER
NOPREFERRED_PATH (Default)

Note

The PREFERRED_PATH and NOPREFERRED_PATH qualifiers are valid for HSJ and HSD controllers only. The preferred path for HSZ controllers is determined by the unit number (the target portion of the unit number–the hundreds place) specified on the ADD UNIT command.

Specifies the preferred controller that the unit should be accessed through (PREFERRED_PATH=) or whether the unit may be accessed through either controller (NOPREFERRED_PATH).

The preferred path qualifier is used only if both controllers are running in a dual-redundant configuration. If one controller fails, then all the devices will be made accessible through the remaining controller, ignoring the preferred path setting.

When the failed controller is restarted, the drives automatically return to the controller specified by the preferred path qualifier.

Note

The PREFERRED_PATH qualifier may be specified on a single controller, however, the qualifier will not take effect until a second controller is added and the two controllers are configured for dual-redundancy. The second controller will inherit any PREFERRED_PATH settings, and the two controllers will operate using the preset PREFERRED_PATH options.

READ_CACHE (Default)
NOREAD_CACHE
Enables and disables the controller's read cache on this unit.

RUN (Default)
NORUN
Enables and disables a unit's availibility to the host. When RUN (default) is specified, the devices that make up the unit will be spun up and the unit will be made available to the host. If NORUN is specified, the devices that make up the unit will still be spun up, but the unit will not be made available to the host.

WRITE_PROTECT
NOWRITE_PROTECT (Default)
Enables and disables write protection of the unit.

WRITEBACK_CACHE
NOWRITEBACK_CACHE (Default)
Enables and disables the controller's write-back cache on this unit.

Note

It may take up to 5 minutes to flush unwritten data from the write-back cache once you disable write-back caching.

Note

When initially added, NOWRITEBACK_CACHE is the default.

Qualifiers for a Unit Created from a RAIDset

MAXIMUM_CACHED_TRANSFER=*n*
MAXIMUM_CACHED_TRANSFER=32 (Default)
Specifies the maximum size transfer in blocks to be cached by the controller. Any transfers over this size are not cached. Valid values are 1–1024.

PREFERRED_PATH=THIS_CONTROLLER
PREFERRED_PATH=OTHER_CONTROLLER
NOPREFERRED_PATH (Default)

Note

The PREFERRED_PATH and NOPREFERRED_PATH qualifiers are valid for HSJ and HSD controllers only. The preferred path for HSZ controllers is determined by the unit number (the target portion of the unit number–the hundreds place) specified on the ADD UNIT command.

Specifies the preferred controller that the unit should be accessed through (PREFERRED_PATH=) or whether the unit may be accessed through either controller (NOPREFERRED_PATH).

The preferred path qualifier is used only if both controllers are running in a dual-redundant configuration. If one controller fails, then all the devices will be made accessible through the remaining controller, ignoring the preferred path setting.

When the failed controller is restarted, the drives automatically return to the controller specified by the preferred path qualifier.

Note

The PREFERRED_PATH qualifier may be specified on a single controller, however, the qualifier will not take effect until a second controller is added and the two controllers are configured for dual-redundancy. The

second controller will inherit any PREFERRED_PATH settings, and the two controllers will operate using the preset PREFERRED_PATH options.

RUN (Default)
NORUN
Enables and disables a unit's availibility to the host. When RUN (default) is specified, the devices that make up the unit will be spun up and the unit will be made available to the host. If NORUN is specified, the devices that make up the unit will still be spun up, but the unit will not be made available to the host.

WRITE_PROTECT
NOWRITE_PROTECT (Default)
Enables and disables write protection of the unit.

Note

Writes may still be performed to a write-protected RAIDset to satisfy a reconstruct pass or to reconstruct a newly replaced member. However, write protect will disable the writing of any new data.

WRITEBACK_CACHE
NOWRITEBACK_CACHE (Default)
Enables and disables the controller's write-back cache on this unit.

Note

It may take up to 5 minutes to flush unwritten data from the write-back cache once you disable write-back caching.

Qualifiers for a Unit Created from a Stripeset

MAXIMUM_CACHED_TRANSFER=*n*
MAXIMUM_CACHED_TRANSFER=32 (Default)
Specifies the maximum size transfer in blocks to be cached by the controller. Any transfers over this size are not cached. Valid values are 1–1024.

PREFERRED_PATH=THIS_CONTROLLER
PREFERRED_PATH=OTHER_CONTROLLER
NOPREFERRED_PATH (Default)

Note

The PREFERRED_PATH and NOPREFERRED_PATH qualifiers are valid for HSJ and HSD controllers only. The preferred path for HSZ controllers is determined by the unit number (the target portion of the unit number–the hundreds place) specified on the ADD UNIT command.

Specifies the preferred controller that the unit should be accessed through (PREFERRED_PATH=) or whether the unit may be accessed through either controller (NOPREFERRED_PATH).

The preferred path qualifier is used only if both controllers are running in a dual-redundant configuration. If one controller fails, then all the devices will be made accessible through the remaining controller, ignoring the preferred path setting.

When the failed controller is restarted, the drives automatically return to the controller specified by the preferred path qualifier.

Note

The PREFERRED_PATH qualifier may be specified on a single controller, however, the qualifier will not take effect until a second controller is added and the two controllers are configured for dual-redundancy. The second controller will inherit any PREFERRED_PATH settings, and the two controllers will operate using the preset PREFERRED_PATH options.

READ_CACHE (Default)
NOREAD_CACHE
Enables and disables the controller's read cache on this unit.

RUN (Default)
NORUN
Enables and disables a unit's availibility to the host. When RUN (default) is specified, the devices that make up the unit will be spun up and the unit will be made available to the host. If NORUN is specified, the devices that make up the unit will still be spun up, but the unit will not be made available to the host.

WRITE_PROTECT
NOWRITE_PROTECT (Default)
Enables and disables write protection of the unit.

WRITEBACK_CACHE
NOWRITEBACK_CACHE (Default)
Enables and disables the controller's write-back cache on this unit.

Note

It may take up to 5 minutes to flush unwritten data from the write-back cache once you disable write-back caching.

Qualifiers for a Unit Created from a Tape Drive (HSJ and HSD only)

DEFAULT_FORMAT=*format*
DEFAULT_FORMAT=DEVICE_DEFAULT (Default)
Specifies the tape format to be used unless overridden by the host. Note that not all devices support all formats. The easiest way to determine what formats are supported by a specific device is to enter the ''SHOW <tape unit number> DEFAULT_FORMAT= ?'' command—the valid options will be displayed.

Supported tape formats are as follows:

- DEVICE_DEFAULT (default)

  The default tape format is the default that the device uses, or, in the case of devices that can be set via switches on the front panel, the settings of those switches.
- 800BPI_9TRACK
- 1600BPI_9TRACK
- 6250BPI_9TRACK
- TZ85
- TZ86
- TZ87_NOCOMPRESSION
- TZ87_COMPRESSION
- DAT_NOCOMPRESSION
- DAT_COMPRESSION
- 3480_NOCOMPRESSION
- 3480_COMPRESSION

PREFERRED_PATH=THIS_CONTROLLER
PREFERRED_PATH=OTHER_CONTROLLER
NOPREFERRED_PATH (Default)

Note

The PREFERRED_PATH and NOPREFERRED_PATH qualifiers are valid for HSJ and HSD controllers only. The preferred path for HSZ controllers is determined by the unit number (the target portion of the unit number–the hundreds place) specified on the ADD UNIT command.

Specifies the preferred controller that the unit should be accessed through (PREFERRED_PATH=) or whether the unit may be accessed through either controller (NOPREFERRED_PATH).

The preferred path qualifier is used only if both controllers are running in a dual-redundant configuration. If one controller fails, then all the devices will be made accessible through the remaining controller, ignoring the preferred path setting.

When the failed controller is restarted, the drives automatically return to the controller specified by the preferred path qualifier.

Note

The PREFERRED_PATH qualifier may be specified on a single controller, however, the qualifier will not take effect until a second controller is added and the two controllers are configured for dual-redundancy. The second controller will inherit any PREFERRED_PATH settings, and the two controllers will operate using the preset PREFERRED_PATH options.

ADD UNIT

Examples

1. `CLI> ADD UNIT D0 DISK0`

   Creates disk unit number 0 from container DISK0.

2. `CLI> ADD UNIT T0 TAPE12`

   Creates tape unit number 0 from container TAPE12.

3. `CLI> ADD UNIT D170 RAID9 WRITE_PROTECT`

   Creates disk unit number 170 from container RAID9 and write protects it.

CLEAR_ERRORS CLI

Stops displaying errors at the CLI prompt.

Format

CLEAR_ERRORS CLI

Description

Errors detected by controller firmware are displayed before the CLI prompt. These errors are displayed even after the error condition is rectified, until the controller is restarted or the CLEAR_ERRORS CLI command is issued.

Note

This command does not clear the error conditions, it only clears displaying the errors at the CLI prompt.

Examples

1.
```
CLI>

All NVPM components initialized to their default settings.
CLI> CLEAR_ERRORS CLI
CLI>
```

Clears the message ‘‘All NVPM components initialized to their default settings.’’ that was displayed at the CLI prompt.

CLEAR_ERRORS INVALID_CACHE

Clears all data from the cache and makes it usable by the specified controller.

Format

CLEAR_ERRORS INVALID_CACHE *controller*

Parameters

controller
Specifies which controller will clear the INVALID_CACHE condition. Either THIS_CONTROLLER or OTHER_CONTROLLER must be specified.

Description

CAUTION

This command causes loss of customer data.

Note

Because this command causes loss of customer data, ''INVALID_CACHE'' must be completely spelled out, not abbreviated.

If a write-back cache module with unwritten cache data from another controller is installed on this controller, or if the write-back cache module with unwritten cache data is removed from this controller, an INVALID_CACHE error results. CLEAR_ERRORS INVALID_CACHE clears the invalid cache error, however *all customer data that was in cache is lost*. For this reason, use great caution when considering using this command.

Entering this command on one controller in a dual-redundant configuration causes the other controller to restart.

Examples

1.
```
CLI> CLEAR_ERRORS INVALID_CACHE THIS_CONTROLLER
```

   Clears all cache information from this controller's cache and clears the invalid cache error.

CLEAR_ERRORS LOST_DATA

Clears the lost data error on a unit.

Format

CLEAR_ERRORS LOST_DATA *unit-number*

Parameters

unit-number
Specifies the logical unit number (for HSDs and HSJs D0–D4094 or T0–T4094, for HSZs D0–D7, D100-D107, and so forth) that will have the lost data error cleared. The *unit-number* is the name given the unit when it was created using the ADD UNIT command.

Description

CAUTION

This command causes loss of customer data.

Note

Because this command causes loss of customer data, ''LOST_DATA'' must be completely spelled out, not abbreviated.

It may take up to 5 minutes to clear lost data.

If customer data has been lost due to the removal or failure of the write-back cache, the lost data error is reported on the unit. CLEAR_ERRORS LOST_DATA clears the lost data error, however, *all customer data that had not been written to disk is lost*.

For this reason, use great caution when considering using this command.

Examples

1.
```
CLI> CLEAR_ERRORS LOST_DATA D13
```
Clears the lost data error on disk unit D13.

CLEAR_ERRORS UNKNOWN

Clears the UNKNOWN error from a device.

Format

CLEAR_ERRORS UNKNOWN *device-name*

Parameters

device-name
Specifies the device name of the device with the UNKNOWN error.

Description

Note

''UNKNOWN'' must be completely spelled out, not abbreviated.

If a device has a failure such that the controller marks the device as UNKNOWN, the device is never automatically checked again to see if it has been repaired or if the failure condition was rectified. When you rectifiy a condition that caused a device to be marked UNKNOWN, this command must be issued for the controller to recognize the device.

Examples

1.
```
CLI> CLEAR_ERRORS UNKNOWN DISK300
```

Causes the controller to recognize DISK300, a previously UNKNOWN device.

CLEAR_ERRORS UNWRITEABLE_DATA

Clears the unwriteable data error on a unit.

Format

CLEAR_ERRORS UNWRITEABLE_DATA *unit-number*

Parameters

unit-number
Specifies the logical unit number (for HSDs and HSJs D0–D4094 or T0–T4094, for HSZs D0–D7, D100-D107, and so forth) that will have the unwriteable data error cleared. The *unit-number* is the name given the unit when it was created using the ADD UNIT command.

Description

CAUTION

This command causes loss of customer data.

Note

Because this command causes loss of customer data, ''UNWRITEABLE_ DATA'' must be completely spelled out, not abbreviated.

If a container fails in a way that customer data in the write-back cache cannot be written to the container, the unwriteable data error is reported. CLEAR_ ERRORS UNWRITEABLE_DATA clears the unwriteable data error, however, *all customer data that has not been written to disk is lost*.

For this reason, use great caution when considering using this command.

Examples

1.
```
CLI> CLEAR_ERRORS UNWRITEABLE_DATA D13
```

Clears the unwriteable data error on disk unit D13.

DELETE *container-name*

Deletes a container from the list of known containers.

Format

DELETE *container-name*

Parameters

container-name
Specifies the name that identifies the container. This is the name given the container when it was created using the ADD command (ADD DEVICE, ADD STRIPESET, and so forth).

Description

Checks to see if the container is used by any other containers or a unit. If the container is in use, an error is displayed and the container is not deleted.

If the container is not in use, it is deleted.

Note

The spareset and failedset containers cannot be deleted. See DELETE SPARESET and DELETE FAILEDSET commands.

Examples

1. `CLI> DELETE DISK0`

   Deletes DISK0 from the list of known containers.

2. `CLI> DELETE STRIPE0`

   Deletes STRIPE0 from the list of known containers.

3. `CLI> DELETE RAID9`

   Deletes RAID9 from the list of known containers.

DELETE FAILEDSET

Delete a disk drive from the failedset.

Format

DELETE FAILEDSET *disk-container-name0 [disk-container-nameN]*

Parameters

disk-container-name0 disk-container-nameN
The disk drive container names to delete from the failedset. Any number of disks may be deleted from the failedset using only one command.

Description

The FAILEDSET is a group of drives that were removed from RAIDsets and mirrorsets, either because they failed or because they were manually removed via the SET command. Drives in the failedset should be considered defective and should be tested, then repaired or replaced. The DELETE FAILEDSET command removes drives from the failedset, typically before you remove them physically from the shelf for testing, repair, or replacement.

Examples

1. `CLI> DELETE FAILEDSET DISK220`

   Deletes one disk from the failedset.

2. `CLI> DELETE FAILEDSET DISK100 DISK210 DISK220 DISK330 DISK400`

   Deletes five disks from the failedset.

DELETE SPARESET

Delete a disk drive from the spareset.

Format

DELETE SPARESET *disk-container-name0 [disk-container-nameN]*

Parameters

disk-container-name0 disk-container-nameN
The disk drive container names to delete from the spareset. Any number of disks may be deleted from the spareset using only one command.

Description

The SPARESET is a pool of drives available to the controller to replace failing members of RAIDsets and mirrorsets. The DELETE SPARESET command removes disk drives from the spareset.

Examples

1. `CLI> DELETE SPARESET DISK230`

   Deletes one disk from the spareset.

2. `CLI> DELETE SPARESET DISK110 DISK210 DISK240 DISK320 DISK400`

   Deletes five disks from the spareset.

DELETE *unit-number*

Deletes a unit from the list of known units.

Format

DELETE *unit-number*

Parameters

unit-number
Specifies the logical unit number (for HSDs and HSJs D0–D4094 or T0–T4094, for HSZs D0–D7, D100-D107, and so forth) that is to be deleted. The *unit-number* is the name given the unit when it was created using the ADD UNIT command.

Description

The DELETE command flushes any user data from the write-back cache to the disk and deletes the logical unit. If the logical unit specified is online to a host, the unit is not deleted unless the OVERRIDE_ONLINE qualifier is specified. If any errors occur when trying to flush the user data, the logical unit is not deleted.

In order to delete a unit that has cache errors, you must clear all cache errors associated with the unit via a CLEAR_ERRORS command.

Qualifiers for HSD and HSJ controllers

OVERRIDE_ONLINE
NOOVERRIDE_ONLINE (Default)
If the logical unit is online to the controller, it is not deleted unless the OVERRIDE_ONLINE qualifier is specified.

If the OVERRIDE_ONLINE qualifier is specified, the unit is run down, the user data is flushed to disk, and the logical unit is deleted.

CAUTION

Customer data may be lost or corrupted if the OVERRIDE_ONLINE qualifier is specified.

Examples

1.
```
CLI> DELETE D12
```

   Deletes disk unit number 12 from the list of known units.

2.
```
CLI> DELETE T3 OVERRIDE_ONLINE
```

   Deletes tape unit number 3 from the list of known units even if it is currently online to a host.

DIRECTORY

Lists the diagnostics and utilities available on THIS_CONTROLLER.

Format

DIRECTORY

Description

The DIRECTORY command lists the various diagnostics and utilities that are available on THIS_CONTROLLER. A directory of diagnostics and utilities available on this controller is displayed.

For specific information about the diagnostics and utilities available, refer to the *StorageWorks Array Controllers HS Family of Array Controllers Service Manual*.

Examples

1.
```
CLI> DIRECTORY
TILX   V25J   D
DILX   V25J   D
VTDPY  V25J   D
FLS    V25J   D
ECHO   V25J   D
DIRECT V25J   D
CLI    V25J   D
ECHO   V25J   D
CFMENU V25J   D
CHVSN  V25J   D
CLCP   V25J   D
CLONE  V25J   D
CONFIG V25J   D
CRASH  V25J   D
FMU    V25J   D
```

Displays directory listing.

EXIT

Exits the CLI and breaks the virtual terminal connection.

Format

EXIT

Description

When entering the EXIT command from a host using a virtual terminal connection, the connection is broken and control is returned to the host. If entered from a maintenance terminal, the EXIT command restarts the CLI, displaying the copyright notice, the controller type, and the last fail packet.

Examples

1.
```
CLI> EXIT

Copyright (C) Digital Equipment Corporation 1994
HSJ40 Firmware version V020-0, Hardware version 0000

Last fail code: 01800080

Press " ?" at any time for help.

CLI>
```

An EXIT command issued on a maintenance terminal.

2.
```
CLI> EXIT
Control returned to host
$
```

An EXIT command issued on a terminal that was connected to the CLI via a DUP connection.

HELP

Displays an overview for getting help.

Format

HELP

Description

The HELP command displays a brief description for using the question mark ‘‘?’’ to obtain help on any command or CLI function.

Examples

1.
```
CLI> HELP
Help may be requested by typing a question mark (?) at the CLI prompt.  This
will print a list of all available commands

For further information you may enter a partial command and type a space
followed by a "?" to print a list of all available options at that point in
the command.  For example:

          SET THIS_CONTROLLER ?

Prints a list of all legal SET THIS_CONTROLLER commands
```

Displaying help using the HELP command.

2.
```
CLI> SET ?
Your options are:
   FAILOVER
   OTHER_CONTROLLER
   NOFAILOVER
   THIS_CONTROLLER
   Unit number or container name
```

Getting help on the SET command, using the ‘‘?’’ facility.

INITIALIZE

Initializes the metadata on the container specified.

Format

INITIALIZE *container-name*

Parameters

container-name
Specifies the container name to initialize.

Description

The INITIALIZE command initializes a container so a logical unit may be created from it. During initialization, a small amount of disk space is used for controller metadata and is made inaccessible to the host.

If a single-disk container was set as TRANSPORTABLE, any metadata is destroyed on the device and the full device is accessible to the host.

CAUTION

The INITIALIZE command destroys all customer data on the container.

Note

It may take up to 2 minutes to initialize a RAIDset, stripeset, or mirrorset.

The INITIALIZE command is required when:

- A unit is going to be created from a newly installed disk
- A unit is going to be created from a newly created storageset, (RAIDset, stripeset, or mirrorset)

The INITIALIZE command is *not* required when:

- A unit has been deleted, and a new unit is going to be created from the same container
- A storageset that was initialized in the past is deleted, then added again using the same members that were in the original storageset

Qualifiers

CHUNKSIZE=*n*
CHUNKSIZE=DEFAULT (Default)
Specifies the chunksize to be used for RAIDsets and stripesets. The chunksize may be specified in blocks (CHUNKSIZE=*n*), or you can let the controller determine the optimal chunksize (CHUNKSIZE=DEFAULT). The CHUNKSIZE qualifier does not apply to mirrorsets.

INITIALIZE

DESTROY (Default)
NODESTROY
This qualifier prevents the user data and forced error metadata from being destroyed during intialization. This allows the data on the container to be reused for a disk, stripeset, or mirrorset unit. (The NODESTROY qualifier is ignored for RAIDsets.) NODESTROY is only used when creating a unit out of devices that have been reduced from mirrorsets.

Examples

1. `CLI> INITIALIZE DISK0`

   Initializes container DISK0. If NOTRANSPORTABLE was specified (or allowed to default), metadata is written on the disk.

2. `CLI> INITIALIZE STRIPE0 CHUNKSIZE=20`

   Initializes container STRIPE0 and writes metadata on it. The default chunksize for stripesets is 128 blocks for HSOF V2.5.

3. `CLI> INITIALIZE RAID9 CHUNKSIZE=20`

   Initializes container RAID9 with a chunksize of 20 and writes metadata on it. The default chunksize for RAIDsets is 128 blocks for HSOF V2.5.

4. `CLI> INITIALIZE MIRROR1 NODESTROY`

   Initializes container MIRROR1 and does not write over the forced error metadata.

LOCATE

Locates units, storagesets, and devices by lighting the amber device fault LED on the front of the StorageWorks building block (SBB).

Format

LOCATE

Description

The LOCATE command illuminates the amber device fault LEDs (the lower LED on the front of an SBB) of the containers specified. The LOCATE command also can be used as a lamp test.

Qualifiers

ALL

The LOCATE ALL command turns on the amber device fault LEDs of all configured devices. This qualifier also can be used as a lamp test. See LOCATE CANCEL to turn off the LEDs.

An error is displayed if no devices have been configured.

CANCEL

The LOCATE CANCEL command turns off all amber device fault LEDs on all configured devices.

An error is displayed if no devices have been configured.

DISKS

The LOCATE DISKS command turns on the amber device fault LEDs of all configured disks. See LOCATE CANCEL to turn off the LEDs.

An error is displayed if no disks have been configured.

LOADERS

The LOCATE LOADERS command turns on the amber device fault LEDs of all configured loader devices. See LOCATE CANCEL to turn off the LEDs.

An error is displayed if no loader devices have been configured.

OPTICALS

The LOCATE OPTICALS command turns on the amber device fault LEDs of all configured optical drives. See LOCATE CANCEL to turn off the LEDs.

An error is displayed if no optical drives have been configured.

TAPES

The LOCATE TAPES command turns on the amber device fault LEDs of all configured tape devices. See LOCATE CANCEL to turn off the LEDs.

An error is displayed if no tape devices have been configured.

LOCATE

UNITS

The LOCATE UNITS command turns on the amber device fault LEDs of all devices used by units. This command is useful to determine which devices are not currently configured into logical units. See LOCATE CANCEL to turn off device the LEDs.

An error is displayed if no units have been configured.

PTL *SCSI-location*

The LOCATE PTL *SCSI-location* command turns on the amber device fault LEDs at the given SCSI location. *SCSI-location* is specified in the form PTL where **P** designates the port (1–6 or 1–3, depending on the controller model), **T** designates the target ID of the device (0–6 in a nonfailover configuration or 0–5 if the controller is in a failover configuration), and **L** designates the LUN of the device (0–7).

When entering the PTL, at least one space must separate the port, target, and LUN numbers. See LOCATE CANCEL to turn off the LEDs.

An error is displayed if the port, target, or LUN is invalid, or if no device is configured at that location.

device or storageset name or unit number (*entity*)

The LOCATE *entity* command turns on the amber device fault LEDs that make up the entity supplied. If a device name is given, the device's LED is lit. If a storageset name is given, all device LEDs that make up the storageset are lit. If a unit number is given, all device LEDs that make up the unit are lit. See LOCATE CANCEL to turn off the LEDs.

An error is displayed if no entity by that name or number has been configured.

Examples

1.
```
CLI> LOCATE DISK0
```
Turns on the device fault LED on device DISK0.

2.
```
CLI> LOCATE D12
```
Turns on the device fault LEDs on all devices that make up disk unit number 12.

3.
```
CLI> LOCATE DISKS
```
Turns on the device fault LEDs on all configured disk devices.

MIRROR *disk-device-name1 container-name*

Allows you to convert a physical device to a one-member mirrorset.

Format

MIRROR *disk-device-name1 container-name*

Parameters

disk-device-name1
Specifies the name of the physical device that you wish to convert to a one-member mirrorset. The device must be part of a unit.

container-name
Specifies the name that is used to refer to this mirrorset. The name must start with a letter (A–Z) and can then consist of up to eight more characters made up of letters A–Z, numbers 0–9, periods (.), dashes (-), or underscores (_), for a total of nine characters.

Description

The MIRROR *disk-device-name1 container-name* command allows you to convert a physcial device specified by *disk-device-name* to a mirrorset with one member. The mirrorset name is specified by *container-name*. This command can be used on devices that are already members of higher level containers (stripesets or units).

After you convert the device to a mirrorset, increase the nominal number of members with the SET *mirrorset-container-name* MEMBERSHIP=*number-of-members* command. Use the SET *mirrorset-container-name* REPLACE=*disk-device-name* command to actually add more members to the mirrorset. Refer to SET *mirror-container-name* for details for using the MEMBERSHIP= *number-of-members* qualifier versus the REPLACE= *disk-device-name* qualifier.

NOTE

When this command is used to create mirrorsets from stripeset members that were created before HSOF Version 2.5, the stripeset will then be incompatible with prior firmware versions.

Qualifiers

COPY=*copy_speed*
The COPY qualifier allows you to specify the speed at which mirrorset copies are performed. You may specify either NORMAL or FAST.

NORMAL uses relatively few controller resources to perform the copy, and has little impact on controller performance.

FAST uses more controller resources, which reduces the time it takes to complete the copy, but also reduces overall controller performance.

MIRROR *disk-device-name1 container-name*

POLICY=BEST_FIT
POLICY=BEST_PERFORMANCE
NOPOLICY (Default)
The POLICY qualifier specifies the replacement policy to be used when a mirrorset member within the mirrorset fails.

BEST_FIT gives highest priority to finding a replacement device within the spareset that most closely matches the sizes of the remaining members of the mirrorset. If more than one device in the spareset is the correct size, the device that gives the best performance is selected.

BEST_PERFORMANCE (default) gives highest priority to finding a replacement device within the spareset that results in the best performance of the mirrorset (the device should be on a different port). If more than one device in the spareset has the best performance, the device that most closely matches the size of the remaining members of the mirrorset is selected.

NOPOLICY retries a failing device from the mirrorset without selecting a replacement. This causes the mirrorset to run with less than the nominal number of members until a BEST_FIT or BEST_PERFORMANCE policy is selected, or a member is manually replaced in the mirrorset.

Examples

1.
```
CLI> MIRROR DISK210 MIRROR5
```

   Creates a one-member mirrorset from a DISK210 (a single disk).

REDUCE *disk-device-name1 [disk-device-nameN]*

Allows you to remove members from an existing mirrorset.

Format

REDUCE *disk-device-name1 [disk-device-nameN]*

Parameters

disk-device-name1
Specifies the name of the NORMAL mirrorset member to be removed.

[disk-device-nameN]
Specifies the name of the second mirrorset member to be removed.

Description

This command allows you to remove members from mirrorsets. For a consistent copy of a stripeset whose members are mirrorsets, all mirrorsets must be reduced at the same time with one command. It is similar to the SET *mirrorset-container-name* REMOVE=*disk-device-name* command, except that the nominal number of members in the mirrorset is decreased by the number of members removed, and the devices are not placed in the failedset.

Note

Mirrorsets have both a nominal number of members and an actual number of members. The nominal number of members in a mirrorset is the number given in the SET *mirrorset-name* MEMBERSHIP=*number-of-members* command. If devices have not been added to the mirrorset, or if a member is removed, the actual number of members may be less than the nominal number. The actual number of members can never be greater than the nominal number of members.

The disk devices to be removed need not be members of the same mirrorset. The devices MUST be part of the same unit (for example, the same stripeset). This is an atomic operation because the I/O to the unit associated with the given mirrorset members is stalled while the specified mirrorset members are removed. No autosparing occurs, and each mirrorset membership is set to the new reduced number of members. The removed devices specified by *disk-device-name1* through *disk-device-nameN* are not placed in the failedset, but are left as unused devices.

Note that for each mirrorset that you reduce, the mirrorset must have at least one remaining NORMAL member after the reduction. If this is not true for all *disk-devices-names* specified, then none of the specified mirrorsets are reduced.

Note

A NORMAL member is a mirrorset member whose entire contents are guaranteed to be the same as all other NORMAL members. All NORMAL members have exactly the same contents.

REDUCE *disk-device-name1 [disk-device-nameN]*

Examples

1.
```
CLI> REDUCE DISK210 DISK110
```

DISK210 and DISK110 are removed from their respective mirrorsets.

RENAME

Renames a container.

Format

RENAME *old-container-name new-container-name*

Parameters

old-container-name
Specifies the existing name that identifies the container.

new-container-name
Specifies the new name to identify the container. This name is referred to when creating units and storagesets. The name must start with a letter (A–Z) and can then consist of up to eight more characters made up of letters A–Z, numbers 0–9, periods (.), dashes (-), or underscores (_), for a total of nine characters.

Description

Gives a known container a new name by which to be referred.

Examples

1.
```
CLI> RENAME DISK0 DISK100
```

   Renames container DISK0 to DISK100.

RESTART OTHER_CONTROLLER

Restarts the other controller.

Format

RESTART OTHER_CONTROLLER

Description

The RESTART OTHER_CONTROLLER command flushes all user data from the other controller's write-back cache (if present), then restarts the other controller.

If any disks are online to the other controller, the controller does not restart unless the OVERRIDE_ONLINE qualifier is specified (HSD and HSJ only). If any user data cannot be flushed to disk, the controller does not restart unless the IGNORE_ERRORS qualifier is specified.

Specifying IMMEDIATE causes the other controller to restart immediately without flushing any user data to the disks, even if drives are online to the host.

The RESTART OTHER_CONTROLLER command does not cause a failover to this controller in a dual-redundant configuration. The other controller restarts and resumes operations where it was interrupted.

Qualifiers for HSD and HSJ Controllers

IGNORE_ERRORS
NOIGNORE_ERRORS (Default)
If errors result when trying to write user data, the controller is not restarted unless IGNORE_ERROR is specified.

If the IGNORE_ERRORS qualifier is specified, the controller restarts even if all customer data cannot be written to disk from the write-back cache.

CAUTION

Customer data may be lost or corrupted if the IGNORE_ERRORS qualifier is specified.

IMMEDIATE_SHUTDOWN
NOIMMEDIATE_SHUTDOWN (Default)
If IMMEDIATE is specified, the controller is immediately restarted without checking for online devices or flushing user data from write-back cache to disk.

CAUTION

Customer data may be lost or corrupted if the IMMEDIATE qualifier is specified.

OVERRIDE_ONLINE
NOOVERRIDE_ONLINE (Default)
If any units are online to the controller, the controller is not restarted unless OVERRIDE_ONLINE is specified.

If the OVERRIDE_ONLINE qualifier is specified, the controller restarts after all customer data is written to disk.

CAUTION

Customer data may be lost or corrupted if the OVERRIDE_ONLINE qualifier is specified.

Qualifiers for HSZ Controllers

IGNORE_ERRORS
NOIGNORE_ERRORS (Default)
If errors result when trying to write user data, the controller is not restarted unless IGNORE_ERROR is specified.

If the IGNORE_ERRORS qualifier is specified, the controller restarts even if all customer data cannot be written to disk from the write-back cache.

CAUTION

Customer data may be lost or corrupted if the IGNORE_ERRORS qualifier is specified.

IMMEDIATE_SHUTDOWN
NOIMMEDIATE_SHUTDOWN (Default)
If IMMEDIATE is specified, the controller is immediately restarted without checking for online devices or flushing user data from write-back cache to disk.

CAUTION

Customer data may be lost or corrupted if the IMMEDIATE qualifier is specified.

Examples

1.
```
CLI> RESTART OTHER_CONTROLLER
```

Restarts the other controller as long as the other controller does not have any units online.

2.
```
CLI> RESTART OTHER_CONTROLLER OVERRIDE_ONLINE
```

Restarts the other controller even if there are units online to the other controller.

RESTART THIS_CONTROLLER

Restarts this controller.

Format

RESTART THIS_CONTROLLER

Description

The RESTART THIS_CONTROLLER command flushes all user data from this controller's write-back cache (if present), then restarts this controller.

If any disks are online to the other controller, the controller does not restart unless the OVERRIDE_ONLINE qualifier is specified (HSD and HSJ only). If any user data cannot be flushed to disk, the controller does not restart unless the IGNORE_ERRORS qualifier is specified.

Specifying IMMEDIATE causes this controller to restart immediately without flushing any user data to the disks, even if drives are online to a host.

The RESTART THIS_CONTROLLER command does not cause a failover to the other controller in a dual-redundant configuration. This controller restarts and resumes operations where it was interrupted.

Note

If you enter the RESTART THIS_CONTROLLER command and you are using a virtual terminal to communicate with the controller, the connection is lost when the controller restarts.

Qualifiers for HSD and HSJ Controllers

IGNORE_ERRORS
NOIGNORE_ERRORS (Default)
If errors result when trying to write user data, the controller is not restarted unless IGNORE_ERROR is specified.

If the IGNORE_ERRORS qualifier is specified, the controller restarts even if all customer data cannot be written to disk from the write-back cache.

CAUTION

Customer data may be lost or corrupted if the IGNORE_ERRORS qualifier is specified.

IMMEDIATE_SHUTDOWN
NOIMMEDIATE_SHUTDOWN (Default)
If IMMEDIATE is specified, the controller is immediately restarted without checking for online devices or flushing user data from write-back cache to disk.

CAUTION

Customer data may be lost or corrupted if the IMMEDIATE qualifier is specified.

OVERRIDE_ONLINE
NOOVERRIDE_ONLINE (Default)
If any units are online to the controller, the controller is not restarted unless OVERRIDE_ONLINE is specified.

If the OVERRIDE_ONLINE qualifier is specified, the controller restarts after all customer data is written to disk.

CAUTION

Customer data may be lost or corrupted if the OVERRIDE_ONLINE qualifier is specified.

Qualifiers for HSZ Controllers

IGNORE_ERRORS
NOIGNORE_ERRORS (Default)
If errors result when trying to write user data, the controller is not restarted unless IGNORE_ERROR is specified.

If the IGNORE_ERRORS qualifier is specified, the controller restarts even if all customer data cannot be written to disk from the write-back cache.

CAUTION

Customer data may be lost or corrupted if the IGNORE_ERRORS qualifier is specified.

IMMEDIATE_SHUTDOWN
NOIMMEDIATE_SHUTDOWN (Default)
If IMMEDIATE is specified, the controller is immediately restarted without checking for online devices or flushing user data from write-back cache to disk.

CAUTION

Customer data may be lost or corrupted if the IMMEDIATE qualifier is specified.

Examples

1.
```
CLI> RESTART THIS_CONTROLLER
```

Restarts this controller as long as this controller does not have any units that are online.

2. `CLI> RESTART THIS_CONTROLLER OVERRIDE_ONLINE`

   Restarts this controller even if there are units online to this controller.

RETRY_ERRORS UNWRITEABLE_DATA

Tries to write the unwriteable data on a unit.

Format

RETRY_ERRORS UNWRITEABLE_DATA *unit-number*

Parameters

unit-number
Specifies the logical unit number (for HSDs and HSJs D0–D4094 or T0–T4094, for HSZs D0–D7, D100-D107, and so forth) which the write operation of the unwriteable data is attempted. The *unit-number* is the name given the unit when it was created using the ADD UNIT command.

Description

If a container fails in a way that customer data in the write-back cache cannot be written to the container, the unwriteable data error is reported. If possible the condition that is causing the unwriteable data should be corrected and the write operation should be attempted again. RETRY_ERRORS UNWRITEABLE_DATA attempts to write the unwriteable data error. No data is lost if the retry fails.

Examples

1.
```
CLI> RETRY_ERRORS UNWRITEABLE_DATA D13
```

   Attempts to write the cached data on disk unit D13 that was previously marked unwriteable.

RUN

Runs a diagnostic or utility on THIS_CONTROLLER.

Format

RUN *program-name*

Parameters

program-name
The name of the diagnostic or utility to be run. DILX and CLONE are examples of utilities and diagnostics that can be run from the CLI.

Description

The RUN command starts various diagnostics and utilities on THIS_CONTROLLER. Diagnostics and utilities can be run *only* on the controller where the terminal or DUP connection is connected.

For specific information about available diagnostics and utilities, refer to the *StorageWorks Array Controllers HS Family of Array Controllers Service Manual*.

Examples

1.
```
CLI> RUN DILX
Disk Inline Exerciser - version 2.0
             .
             .
             .
```
Runs the DILX diagnostic.

SELFTEST OTHER_CONTROLLER

Runs a self-test on the other controller.

Format

SELFTEST OTHER_CONTROLLER

Description

The SELFTEST OTHER_CONTROLLER command flushes all user data from the other controller's write-back cache (if present), shuts down the other controller, then restarts it in DAEMON loop-on-self-test mode. The OCP reset (//) button must be pressed to take the other controller out of loop-on-self-test mode.

If any disks are online to the other controller, the controller does not self-test unless the OVERRIDE_ONLINE qualifier is specified (HSD and HSJ only). If any user data cannot be flushed to disk, the controller does not self-test unless the IGNORE_ERRORS qualifier is specified.

Specifying IMMEDIATE causes the other controller to self-test immediately without flushing any user data to the disks, even if drives are online to the host.

Qualifiers for HSD and HSJ Controllers

IGNORE_ERRORS
NOIGNORE_ERRORS (Default)
If errors result when trying to write user data, the controller does not start the self-test unless IGNORE_ERRORS is specified.

If the IGNORE_ERRORS qualifier is specified, the controller starts the self-test even if all customer data cannot be written to disk from the write-back cache.

CAUTION

Customer data may be lost or corrupted if the IGNORE_ERRORS qualifier is specified.

IMMEDIATE
NOIMMEDIATE (Default)
If IMMEDIATE is specified, the controller will immediately start self-test without checking for online devices or flushing user data from write cache to disk.

CAUTION

Customer data may be lost or corrupted if the IMMEDIATE qualifier is specified.

OVERRIDE_ONLINE
NOOVERRIDE_ONLINE (Default)
If any units are online to the controller, the controller does not self-test unless OVERRIDE_ONLINE is specified.

SELFTEST OTHER_CONTROLLER

If the OVERRIDE_ONLINE qualifier is specified, the controller starts the self-test after all customer data is written to disk from the write-back cache.

CAUTION

Customer data may be lost or corrupted if the OVERRIDE_ONLINE qualifier is specified.

Qualifiers for HSZ Controllers

IGNORE_ERRORS
NOIGNORE_ERRORS (Default)
If errors result when trying to write user data, the controller does not start the self-test unless IGNORE_ERRORS is specified.

If the IGNORE_ERRORS qualifier is specified, the controller starts the self-test even if all customer data cannot be written to disk from the write-back cache.

CAUTION

Customer data may be lost or corrupted if the IGNORE_ERRORS qualifier is specified.

IMMEDIATE
NOIMMEDIATE (Default)
If IMMEDIATE is specified, the controller will immediately start self-test without checking for online devices or flushing user data from write cache to disk.

CAUTION

Customer data may be lost or corrupted if the IMMEDIATE qualifier is specified.

Examples

1. `CLI> SELFTEST OTHER_CONTROLLER`

   Starts the self-test on the other controller, as long as the other controller does not have any units online.

2. `CLI> SELFTEST OTHER_CONTROLLER OVERRIDE_ONLINE`

   Starts the self-test on the other controller even if there are units online to the other controller.

SELFTEST THIS_CONTROLLER

Runs a self-test on this controller.

Format

SELFTEST THIS_CONTROLLER

Description

The SELFTEST THIS_CONTROLLER command flushes all user data from this controller's write-back cache (if present), shuts down this controller, then restarts it in DAEMON loop-on-self-test mode. The OCP reset (///) button must be pressed to take this controller out of loop-on-self-test mode.

If any disks are online to this controller, the controller does not self-test unless the OVERRIDE_ONLINE qualifier is specified (HSD and HSJ only). If any user data cannot be flushed to disk, the controller does not self-test unless the IGNORE_ERRORS qualifier is specified.

Specifying IMMEDIATE causes this controller to self-test immediately without flushing any user data to the disks, even if drives are online to a host.

Note

If you enter a SELFTEST THIS_CONTROLLER command, and you are using a virtual terminal to communicate with the controller, the connection is lost when this controller starts the self-test.

Qualifiers for HSD and HSJ Controllers

IGNORE_ERRORS
NOIGNORE_ERRORS (Default)
If errors result when trying to write user data, the controller does not start the self-test unless IGNORE_ERRORS is specified.

If the IGNORE_ERRORS qualifier is specified, the controller starts the self-test even if all customer data cannot be written to disk from the write-back cache.

CAUTION

Customer data may be lost or corrupted if the IGNORE_ERRORS qualifier is specified.

IMMEDIATE
NOIMMEDIATE (Default)
If IMMEDIATE is specified, the controller will immediately start self-test without checking for online devices or flushing user data from write cache to disk.

SELFTEST THIS_CONTROLLER

CAUTION

Customer data may be lost or corrupted if the IMMEDIATE qualifier is specified.

OVERRIDE_ONLINE
NOOVERRIDE_ONLINE (Default)
If any units are online to the controller, the controller does not self-test unless OVERRIDE_ONLINE is specified.

If the OVERRIDE_ONLINE qualifier is specified, the controller starts the self-test after all customer data is written to disk from the write-back cache.

CAUTION

Customer data may be lost or corrupted if the OVERRIDE_ONLINE qualifier is specified.

Qualifiers for HSZ Controllers

IGNORE_ERRORS
NOIGNORE_ERRORS (Default)
If errors result when trying to write user data, the controller does not start the self-test unless IGNORE_ERRORS is specified.

If the IGNORE_ERRORS qualifier is specified, the controller starts the self-test even if all customer data cannot be written to disk from the write-back cache.

CAUTION

Customer data may be lost or corrupted if the IGNORE_ERRORS qualifier is specified.

IMMEDIATE
NOIMMEDIATE (Default)
If IMMEDIATE is specified, the controller will immediately start self-test without checking for online devices or flushing user data from write cache to disk.

CAUTION

Customer data may be lost or corrupted if the IMMEDIATE qualifier is specified.

Examples

1. `CLI> SELFTEST THIS_CONTROLLER`

   Starts the self-test on this controller as long as this controller does not have any units online.

SET *disk-container-name*

Changes the transportable characteristics of a disk drive.

Format

SET *disk-container-name*

Parameters

disk-container-name
The name of the disk drive that will have its characteristics changed.

Description

Changes the characteristics of a disk drive.

Qualifiers

TRANSPORTABLE
NOTRANSPORTABLE (Default)
In normal operations, the controller makes a small portion of the disk inaccessible to the host and uses this area to store metadata, which improves data reliability, error detection, and recovery. This vast improvement comes at the expense of transportability.

If NOTRANSPORTABLE is specified and there is no valid metadata on the unit, the unit must be initialized.

Note

Digital recommends that you avoid specifying TRANSPORTABLE unless transportability of disk drive or media is imperative and there is no other way to accomplish moving the data.

Examples

1.
```
CLI> SET DISK130 TRANSPORTABLE
```

   Sets DISK130 to transportable.

SET FAILOVER

Places THIS_CONTROLLER and OTHER_CONTROLLER into a dual-redundant configuration.

Format

SET FAILOVER *COPY=configuration-source*

Parameters

COPY=*configuration-source*
Specifies where the ''good'' copy of the device configuration resides.

If THIS_CONTROLLER is specified for *configuration-source*, all the device configuration information on THIS_CONTROLLER (the one that either the maintenance terminal is connected to or the virtual terminal is connected to) is copied to the other controller.

If OTHER_CONTROLLER is specified for *configuration-source*, all the device configuration information on the OTHER_CONTROLLER (the controller that either the maintenance terminal or the virtual terminal connection is *not* connected to) is copied to this controller.

Description

The SET FAILOVER command places THIS_CONTROLLER and the OTHER_CONTROLLER in a dual-redundant configuration. After entering this command, if one of the two controllers fail, the devices and cache (if any) attached to the failed controller become available to and accessible through the operating controller.

CAUTION

All device configuration information on the controller *not* specified by the COPY= parameter is destroyed and overwritten by the configuration information found in the controller specified by the COPY= parameter. **Make sure you know where your good configuration information is stored, or you have a complete copy of the device configuration, BEFORE entering this command**.

A considerable amount of work and effort is lost by overwriting a good configuration with incorrect information if the wrong controller is specified by the COPY= parameter.

Also note that due to the amount of information that must be passed between the two controllers, this command may take up to 1 minute to complete.

Examples

1. `CLI> SET FAILOVER COPY=THIS_CONTROLLER`

   Places two controllers into a dual-redundant configuration, where the ‘‘good’’ data was on the controller that the maintenance terminal or virtual terminal connection was connected to.

2. `CLI> SET FAILOVER COPY=OTHER_CONTROLLER`

   Places two controllers into a dual-redundant configuration, where the ‘‘good’’ data was on the controller that the maintenance terminal or virtual terminal connection was *not* connected to.

SET *mirrorset-container-name*

Changes the characteristics of a mirrorset.

Format

SET *mirrorset-container-name*

Parameters

mirrorset-container-name
The name of the mirrorset that will have its characteristics modified. The name must start with a letter (A–Z) and can then consist of up to eight more characters made up of letters A–Z, numbers 0–9, periods (.), dashes (-), or underscores (_), for a total of nine characters.

Description

Changes the characteristics of a mirrorset.

Qualifiers

MEMBERSHIP=*number-of-members*
Allows you to increase or decrease the nominal membership of a mirrorset to the number specified by *number-of-members*.

If the mirrorset membership is increased, and autosparing is turned on (by specifying POLICY=BEST_FIT or POLICY=BEST_PERFORMANCE), the mirrorset automatically brings in spares until either the new number of members is reached, or there are no more suitable spares.

If autosparing is turned off (by specifying NOPOLICY), then you must use the SET *mirrorset-container-name* REPLACE=*disk-device-name* command to bring the mirrorset up to the new nominal number of members.

You may not set the nominal number of members to be lower than the number of members physically present. Use the REMOVE=*disk-container-name* qualifier to reduce the number of devices that are part of the mirrorset.

REPLACE=*disk-device-name*
Specifies the replacement of a disk member into an existing mirrorset provided the following two conditions are met:

- The replacement policy must be set to NOPOLICY.
- The mirrorset must be missing at least one member.

If these two conditions are met, the device specified by *disk-device-name* is added to the mirrorset specified by *mirrorset-container-name*. The nominal number of members does not change.

Note

No other qualifiers to the SET *mirrorset-device-name* command may be specified if the REPLACE qualifier is specified.

REMOVE=*disk-container-name*

The SET *mirrorset-container-name* REMOVE=*disk-device-name* CLI command allows you to remove members from an existing mirrorset. The device specified by *disk-device-name* is removed from the mirrorset specified by *mirrorset-container-name*. If the physical device is not a member of the mirrorset, or if the mirrorset will not have a remaining NORMAL or NORMALIZING member, then an error is reported and no action is taken. On successful removal, the removed device is added to the failedset and a new member is auto-spared into the mirrorset (if applicable).

Note

A **NORMAL** member is a mirrorset member whose entire contents is guaranteed to be the same as all other NORMAL members. All NORMAL members have exactly the same contents.

NORMALIZING members only exist when a mirrorset is first created. One member is identified as NORMAL, and all other *original* mirrorset members are marked as NORMALIZING. All new data that is written to the mirrorset is written to all members. All data on the NORMAL member that existed before the mirrorset was created is copied to the NORMALIZING members. When all the blocks on the members are the same, the NORMALIZING members are marked as NORMAL.

(Members also may be marked as NORMALIZING if cache data is lost.)

Note that the nominal number of members in the mirrorset does not change. If autosparing does not occur, then when an acceptable spare becomes available or when the replacement policy changes, the mirrorset automatically adds the spare.

Note

No other qualifiers to the SET *mirrorset-device-name* command may be specified if the REMOVE qualifier is specified.

POLICY=BEST_FIT
POLICY=BEST_PERFORMANCE (Default)
NOPOLICY

The SET *mirrorset-container-name* POLICY=*policy-type* command specifies the replacement policy to be used when a mirrorset member within the mirrorset fails.

BEST_FIT gives highest priority to finding a replacement device within the spareset that most closely matches the sizes of the remaining members of the mirrorset. If more than one device in the spareset is the correct size, the device that gives the best performance is selected.

BEST_PERFORMANCE (default) gives highest priority to finding a replacement device within the spareset that results in the best performance of the mirrorset (the device should be on a different port). If more than one device in the spareset has the best performance, the device that most closely matches the size of the remaining members of the mirrorset is selected.

NOPOLICY retries a failing device from the mirrorset without selecting a replacement. This causes the mirrorset to run with less than the nominal number of members until a BEST_FIT or BEST_PERFORMANCE policy is selected, or a member is manually replaced in the mirrorset.

READ_SOURCE=*read-source*

The SET *mirrorset-container-name* READ_SOURCE=*read-source* command allows you to control the read algorithm for the specified mirrorset. The following choices are allowed for read-source:

ROUND_ROBIN—Each NORMAL mirrorset member is the target of a read in sequential membership order. No preference is given to any NORMAL member. This is the default read-source.

LEAST_BUSY—The NORMAL mirrorset member with the least busy work queue is the target of the read.

device-container-name—All reads are done on *device-container-name*. If *device-container-name* fails out of the mirrorset, the READ_SOURCE algorithm reverts to LEAST_BUSY.

COPY=*copy_speed*

The SET *mirrorset-container-name* COPY=*copy_speed* command allows you to specify the speed at which mirrorset copies are performed. You may specify either NORMAL or FAST.

NORMAL uses relatively few controller resources to perform the copy, and has little impact on controller performance.

FAST uses more controller resources, which reduces the time it takes to complete the copy, but also reduces overall controller performance.

Examples

1.
```
CLI> SET MIRR9 POLICY=BEST_FIT
```
Changes mirrorset MIRR9's policy to BEST_FIT.

2.
```
CLI> SET MIRR9 REMOVE=DISK0
```
Removes mirrorset MIRR9's member DISK0 from the mirrorset. If there is a replacement policy, a new disk is taken from the spareset and placed in the mirrorset automatically.

3.
```
CLI> SET MIRR9 REPLACE=DISK320
```
Adds disk DISK320 to the reduced mirrorset, MIRR9. A reconstruct operation begins immediately on DISK320.

SET NOFAILOVER

Removes THIS_CONTROLLER and OTHER_CONTROLLER (if reachable) from a dual-redundant configuration.

Format

SET NOFAILOVER

Description

The SET NOFAILOVER command removes THIS_CONTROLLER and the OTHER_CONTROLLER (if currently reachable) from a dual-redundant configuration. Before or immediately after entering this command, one controller should be physically removed because the sharing of devices is not supported by single controller configurations.

The controller on which the command was entered is always removed from a dual-redundant state, even if the other controller is not currently reachable. No configuration information is lost when leaving a dual-redundant state.

Note

When the SET NOFAILOVER command is issued, the other controller is shutdown (with dual-redundant configurations that have two surviving controllers).

Examples

1.
```
CLI> SET NOFAILOVER
```

   Removes the two controllers from a dual-redundant configuration.

SET OTHER_CONTROLLER

Changes the other controller's parameters (in a dual-redundant configuration, the controller that the maintenance terminal is *not* connected to, or the controller that is *not* the target of the DUP connection.

Format

SET OTHER_CONTROLLER

Description

The SET OTHER_CONTROLLER command allows you to modify the controller parameters of the other controller in a dual-redundant configuration.

Qualifiers for HSD Controllers

CACHE_FLUSH_TIMER=*n*
CACHE_FLUSH_TIMER=DEFAULT
Specifies how many seconds (1–65535) of idle time may elapse before the write-back cache flushes its entire contents to disk. After the specified time, the write-back cache flushes its contents to disk to ensure data integrity. Whenever a change is made to the CACHE_FLUSH_TIMER parameter, the controller must be restarted for the change to take effect.

CACHE_POLICY=A (Default)
CACHE_POLICY=B
Allows selection of the write-back cache battery policy used by the controller. The policy affects the availability of RAIDsets and mirrorsets when the battery condition is low during controller intialization.

Changing this policy on one controller in a dual-redundant controller configuration automatically changes it on the other controller. The parameter change takes effect immediately.

The CACHE_POLICY setting affects RAIDsets and mirrorsets as follows:

- If the CACHE_POLICY on the controller is set to A and the batteries are low when the controller initializes, any RAIDset or mirrorset that does not have access to good batteries is made inoperative.
- If the CACHE_POLICY on the controller is set to B and the batteries are low when the controller initializes, any RAIDset or mirrorset that does not have access to good batteries is accessed in write-through (read cache) mode.

Regardless of the CACHE_POLICY setting, a low or bad battery affects controller operation:

- Stripesets and disk-based units with write-back caching enabled are accessed in write-through (read cache) mode, as long as unwritten cache data has not been lost.
- HSJ- and HSD-based RAIDsets and mirrorsets fail over to the companion cache in a dual-redundant configuration, provided the other cache's batteries are fully charged. RAIDsets and mirrorsets on HSZ and nonredundant controller systems will not fail over.

If the batteries go low after controller initialization, unwritten cache data is flushed from the cache and any RAIDset or mirrorset that does not have access to good batteries is made inoperative, regardless of the cache policy.

- If the batteries are bad or missing, RAIDsets and mirrorsets are made inoperative.
- Write-back caching automatically resumes when the cache batteries are fully recharged or replaced.

CAUTION

There is some risk in setting CACHE_POLICY=B to allow access to mirrorsets and RAIDsets when the batteries are low. Because the batteries may be in an unknown state, there is no guarantee as to how long they will maintain data in the cache if a power failure occurs. Fully charged batteries will maintain the data for a minimum of 100 hours.

ID=*n*
Specifies the DSSI node number (0–7).

MSCP_ALLOCATION_CLASS=*n*
Specifies the allocation class (0–255 in a single controller configuration or 1–255 in a dual-redundant configuration).

When first installed, the controller's MSCP_ALLOCATION_CLASS is set to 0.

PATH
NOPATH
Enables or disables the DSSI port.

When first installed, NOPATH is set.

PROMPT="*new prompt*"
Specifies a 1- to 16-character prompt enclosed in quotes that will be displayed when the controller's CLI prompts for input. Only printable ASCII characters are valid.

When first installed, the CLI prompt is set to the first three letters of the controller's model number (for example, HSJ>, HSD> or HSZ>).

SCS_NODENAME="*xxxxxx*"
Specifies a one- to six-character name for node.

TERMINAL_PARITY=ODD
TERMINAL_PARITY=EVEN
NOTERMINAL_PARITY
Specifies the parity transmitted and expected. Parity options are ODD or EVEN. NOTERMINAL_PARITY causes the controller to not check for, or transmit any parity on the terminal lines.

When first installed, the controller's terminal parity is set to NOTERMINAL_PARITY.

TERMINAL_SPEED=*baud_rate*
Sets the terminal speed to 300, 600, 1200, 2400, 4800, 9600 or 19200 baud. The transmit speed is always equal to the receive speed.

When first installed, the controller's terminal speed is set to 9600 baud.

TMSCP_ALLOCATION_CLASS=*n*
Specifies the allocation class (0–255 in a single controller configuration or 1–255 in a dual-redundant configuration).

When first installed, the controller's TMSCP_ALLOCATION_CLASS is set to 0.

Qualifiers for HSJ Controllers

CI_ARBITRATION=ASYNCHRONOUS (Default)
CI_ARBITRATION=SYNCHRONOUS
ASYNCHRONOUS arbitration is currently (Version 2.5) implemented in HSJ HSOF.

SYNCHRONOUS is for future CI host adapters.

CACHE_FLUSH_TIMER=*n*
CACHE_FLUSH_TIMER=DEFAULT
Specifies how many seconds (1–65535) of idle time may elapse before the write-back cache flushes its entire contents to disk. After the specified time, the write-back cache flushes its contents to disk to ensure data integrity. Whenever a change is made to the CACHE_FLUSH_TIMER parameter, the controller must be restarted for the change to take effect.

CACHE_POLICY=A (Default)
CACHE_POLICY=B
Allows selection of the write-back cache battery policy used by the controller. The policy affects the availability of RAIDsets and mirrorsets when the battery condition is low during controller intialization.

Changing this policy on one controller in a dual-redundant controller configuration automatically changes it on the other controller. The parameter change takes effect immediately.

The CACHE_POLICY setting affects RAIDsets and mirrorsets as follows:

- If the CACHE_POLICY on the controller is set to A and the batteries are low when the controller initializes, any RAIDset or mirrorset that does not have access to good batteries is made inoperative.
- If the CACHE_POLICY on the controller is set to B and the batteries are low when the controller initializes, any RAIDset or mirrorset that does not have access to good batteries is accessed in write-through (read cache) mode.

Regardless of the CACHE_POLICY setting, a low or bad battery affects controller operation:

- Stripesets and disk-based units with write-back caching enabled are accessed in write-through (read cache) mode, as long as unwritten cache data has not been lost.
- HSJ- and HSD-based RAIDsets and mirrorsets fail over to the companion cache in a dual-redundant configuration, provided the other cache's batteries are fully charged. RAIDsets and mirrorsets on HSZ and nonredundant controller systems will not fail over.

  If the batteries go low after controller initialization, unwritten cache data is flushed from the cache and any RAIDset or mirrorset that does not have access to good batteries is made inoperative, regardless of the cache policy.

- If the batteries are bad or missing, RAIDsets and mirrorsets are made inoperative.
- Write-back caching automatically resumes when the cache batteries are fully recharged or replaced.

CAUTION

There is some risk in setting CACHE_POLICY=B to allow access to mirrorsets and RAIDsets when the batteries are low. Because the batteries may be in an unknown state, there is no guarantee as to how long they will maintain data in the cache if a power failure occurs. Fully charged batteries will maintain the data for a minimum of 100 hours.

ID=*n*
Specifies the CI node number (0 through (MAX_NODES - 1)).

MAX_NODES=*n*
Specifies the maximum number of nodes (8, 16, or 32).

When first installed, the controller's MAX_NODES is set to 16.

MSCP_ALLOCATION_CLASS=*n*
Specifies the allocation class (0–255 in a single controller configuration or 1–255 in a dual-redundant configuration).

When first installed, the controller's MSCP_ALLOCATION_CLASS is set to 0.

PATH_A
NOPATH_A
Enables or disables CI Path A.

When first installed, NOPATH_A is set.

PATH_B
NOPATH_B
Enables or disables CI Path B.

When first installed, NOPATH_B is set.

PROMPT="*new prompt*"
Specifies a 1- to 16-character prompt enclosed in quotes that will be displayed when the controller's CLI prompts for input. Only printable ASCII characters are valid.

When first installed, the CLI prompt is set to the first three letters of the controller's model number (for example, HSJ>, HSD> or HSZ>).

SCS_NODENAME="*xxxxxx*"
Specifies a one- to six-character name for node.

TERMINAL_PARITY=ODD
TERMINAL_PARITY=EVEN
NOTERMINAL_PARITY
Specifies the parity transmitted and expected. Parity options are ODD or EVEN. NOTERMINAL_PARITY causes the controller to not check for, or transmit any parity on the terminal lines.

When first installed, the controller's terminal parity is set to NOTERMINAL_PARITY.

TERMINAL_SPEED=*baud_rate*
Sets the terminal speed to 300, 600, 1200, 2400, 4800, 9600 or 19200 baud. The transmit speed is always equal to the receive speed.

When first installed, the controller's terminal speed is set to 9600 baud.

TMSCP_ALLOCATION_CLASS=*n*
Specifies the allocation class (0–255 in a single controller configuration or 1–255 in a dual-redundant configuration).

When first installed, the controller's TMSCP_ALLOCATION_CLASS is set to 0.

Qualifiers for HSZ Controllers

CACHE_FLUSH_TIMER=*n*
CACHE_FLUSH_TIMER=DEFAULT
Specifies how many seconds (1–65535) of idle time may elapse before the write-back cache flushes its entire contents to disk. After the specified time, the write-back cache flushes its contents to disk to ensure data integrity.

CACHE_POLICY=A (Default)
CACHE_POLICY=B
Allows selection of the write-back cache battery policy used by the controller. The policy affects the availability of RAIDsets and mirrorsets when the battery condition is low during controller intialization.

Changing this policy on one controller in a dual-redundant controller configuration automatically changes it on the other controller. The parameter change takes effect immediately.

The CACHE_POLICY setting affects RAIDsets and mirrorsets as follows:

- If the CACHE_POLICY on the controller is set to A and the batteries are low when the controller initializes, any RAIDset or mirrorset that does not have access to good batteries is made inoperative.
- If the CACHE_POLICY on the controller is set to B and the batteries are low when the controller initializes, any RAIDset or mirrorset that does not have access to good batteries is accessed in write-through (read cache) mode.

Regardless of the CACHE_POLICY setting, a low or bad battery affects controller operation:

- Stripesets and disk-based units with write-back caching enabled are accessed in write-through (read cache) mode, as long as unwritten cache data has not been lost.
- HSJ- and HSD-based RAIDsets and mirrorsets fail over to the companion cache in a dual-redundant configuration, provided the other cache's batteries are fully charged. RAIDsets and mirrorsets on HSZ and nonredundant controller systems will not fail over.

  If the batteries go low after controller initialization, unwritten cache data is flushed from the cache and any RAIDset or mirrorset that does not have access to good batteries is made inoperative, regardless of the cache policy.
- If the batteries are bad or missing, RAIDsets and mirrorsets are made inoperative.

- Write-back caching automatically resumes when the cache batteries are fully recharged or replaced.

CAUTION

There is some risk in setting CACHE_POLICY=B to allow access to mirrorsets and RAIDsets when the batteries are low. Because the batteries may be in an unknown state, there is no guarantee as to how long they will maintain data in the cache if a power failure occurs. Fully charged batteries will maintain the data for a minimum of 100 hours.

ID=(*n1[,nN]*)
Specifies from one to four SCSI target IDs (0–7). If two or more target IDs are specified, they must be enclosed in parenthesis and separated by a comma.

Note

The unit number determines which target the LUN will be available under. For example, D203 would be target 2, LUN 3. D500 would be target 5, LUN 0. D5 would be target 0, LUN 5.

If two HSZ controllers are in a dual-redundant configuration, each controller will have the same IDs. When you change the IDs on one controller, the other will automatically be updated.

PREFERRED_ID=(*n1[,nN]*)
NOPREFERRED_ID
In a dual-redundant configuration, PREFERRED_ID defines which targets will be handled by the specified controller. If two or more PREFERRED_IDs are specified, they must be enclosed in parenthesis and separated by a comma. The only PREFERRED_IDs that can be specified must have already been configured using the ID= qualifier.

For example, if you configured a HSZ with IDs 0, 1, and 2, you could specify preferred ids 0, 1, and 2 in any combination on the two controllers. If one controller had preferred ids 0 and 1, it would handle unit numbers 0–7 and 100–107 and the other controller would handle unit numbers 200–207.

When you change the PREFERRED_IDs on one controller, the other controller will be automatically be updated to support the remaining (if any) IDs.

By specifying NOPREFERRED_ID the controller does not respond to any target ID on the host's SCSI bus. However, in a dual-redundant mode, if the controller with PREFERRED_IDs specified were to fail, the controller with NOPREFERRED_ID would pick up the targets of the failed controller.

PROMPT="*new prompt*"
Specifies a 1- to 16-character prompt enclosed in quotes that will be displayed when the controller's CLI prompts for input. Only printable ASCII characters are valid.

When first installed, the CLI prompt is set to the first three letters of the controller's model number (for example, HSJ>, HSD> or HSZ>).

TERMINAL_PARITY=ODD
TERMINAL_PARITY=EVEN
NOTERMINAL_PARITY
Specifies the parity transmitted and expected. Parity options are ODD or EVEN. NOTERMINAL_PARITY causes the controller to not check for, or transmit any parity on the terminal lines.

When first installed, the controller's terminal parity is set to NOTERMINAL_PARITY.

TERMINAL_SPEED=*baud_rate*
Sets the terminal speed to 300, 600, 1200, 2400, 4800, 9600 or 19200 baud. The transmit speed is always equal to the receive speed.

When first installed, the controller's terminal speed is set to 9600 baud.

TIME=*dd-mmm-yyyy:hh:mm:ss*
The TIME= commmand specifies the date and time. If the controller is in a dual-redundant configuration, the time is communicated to the other controller.

Examples

1.
```
CLI> SET OTHER_CONTROLLER PATH_A PATH_B SPEED=1200
```

   Modifies the other HSJ controller's two CI paths and sets the terminal speed to 1200 baud.

SET *RAIDset-container-name*

Changes the characteristics of a RAIDset.

Format

SET *RAIDset-container-name*

Parameters

RAIDset-container-name
The name of the RAIDset that will have its characteristics modified.

Description

Changes the characteristics of a RAIDset.

Qualifiers

POLICY=BEST_FIT
POLICY=BEST_PERFORMANCE (Default)
NOPOLICY
Specifies the replacement policy to use when a member within the RAIDset fails.

BEST_FIT gives highest priority to finding a replacement device within the spareset that most closely matches the sizes of the remaining members of the RAIDset. After finding the most closely matching devices, the device that gives the best performance is selected.

BEST_PERFORMANCE (default) gives highest priority to finding a replacement device within the spareset that results in the best performance of the RAIDset. After finding the best performing devices, the device that most closely matches the size of the remaining members of the RAIDset is selected.

NOPOLICY retires a failing device from the RAIDset without selecting a replacement. This causes the RAIDset to run in a reduced state until a BEST_ FIT or BEST_PERFORMANCE policy is selected, or a member is manually replaced in the RAIDset (see SET *raidset-container-name*).

RECONSTRUCT=NORMAL (Default)
RECONSTRUCT=FAST
NORECONSTRUCT
Specifies the speed at which a RAIDset will be reconstructed when a new member is added to the RAIDset or immediately after the RAIDset is initialized.

RECONSTRUCT=NORMAL (default) balances overall performance of the controller against the demand of reconstructing the RAIDset.

RECONSTRUCT=FAST reconstructs the RAIDset at the fastest rate possible resulting in some loss of performance of the controller overall.

REMOVE=*disk-container-name*
Specifies the removal of a disk member from a RAIDset. If the RAIDset is already in a reduced state, an error is displayed and the command is rejected. If a replacement policy is specified, the replacement is taken from the spareset to replace the removed member using the specified policy. If NOPOLICY is

specified, the RAIDset continues to operate in a reduced state until a replacement is manually specified (see SET *RAIDset-container-name*) REPLACE=) or a policy is specified (see SET *RAIDset-container-name* POLICY=).

The disk removed via the REMOVE= command is added to the failedset.

Note

No other qualifiers to the SET *RAIDset-container-name* command may be specified if REMOVE is specified.

REPLACE=*disk-container-name*

Specifies the replacement of a disk member into a reduced RAIDset. If the RAIDset is not in a reduced state, an error is displayed and the command is rejected. If a replacement policy is already specified, an error is displayed and the command is rejected. If the disk specified is already being used by a configuration (including a spareset), an error is displayed and the command is rejected. Otherwise, the disk specified is added as a member to the specified RAIDset and a reconstruct operation begins immediately.

Note

No other qualifiers to the SET *RAIDset-container-name* command may be specified if REPLACE is specified.

Examples

1.
```
CLI> SET RAID9 POLICY=BEST_FIT
```

   Changes RAIDset RAID9's policy to BEST_FIT.

2.
```
CLI> SET RAID9 REMOVE=DISK0
```

   Removes RAIDset RAID9's member DISK0 from the RAIDset. If there is a replacement policy, a new disk is taken from the spareset and placed in the RAIDset automatically.

3.
```
CLI> SET RAID9 REPLACE=SPAREDISK
```

   Adds disk SPAREDISK to the reduced RAIDset, RAID9. A reconstruct operation begins immediately on SPAREDISK.

SET THIS_CONTROLLER

Changes this controller's parameters (the controller that the maintenance terminal is connected to or the target of the DUP connection).

Format

SET THIS_CONTROLLER

Description

The SET THIS_CONTROLLER command allows you to modify controller parameters on THIS_CONTROLLER in single and dual-redundant configurations.

Qualifiers for HSD Controllers

CACHE_FLUSH_TIMER=*n*
CACHE_FLUSH_TIMER=DEFAULT
Specifies how many seconds (1–65535) of idle time may elapse before the write-back cache flushes its entire contents to disk. After the specified time, the write-back cache flushes its contents to disk to ensure data integrity.

CACHE_POLICY=A (Default)
CACHE_POLICY=B
Allows selection of the write-back cache battery policy used by the controller. The policy affects the availability of RAIDsets and mirrorsets when the battery condition is low during controller intialization.

Changing this policy on one controller in a dual-redundant controller configuration automatically changes it on the other controller. The parameter change takes effect immediately.

The CACHE_POLICY setting affects RAIDsets and mirrorsets as follows:

- If the CACHE_POLICY on the controller is set to A and the batteries are low when the controller initializes, any RAIDset or mirrorset that does not have access to good batteries is made inoperative.
- If the CACHE_POLICY on the controller is set to B and the batteries are low when the controller initializes, any RAIDset or mirrorset that does not have access to good batteries is accessed in write-through (read cache) mode.

Regardless of the CACHE_POLICY setting, a low or bad battery affects controller operation:

- Stripesets and disk-based units with write-back caching enabled are accessed in write-through (read cache) mode, as long as unwritten cache data has not been lost.
- HSJ- and HSD-based RAIDsets and mirrorsets fail over to the companion cache in a dual-redundant configuration, provided the other cache's batteries are fully charged. RAIDsets and mirrorsets on HSZ and nonredundant controller systems will not fail over.

  If the batteries go low after controller initialization, unwritten cache data is flushed from the cache and any RAIDset or mirrorset that does not have access to good batteries is made inoperative, regardless of the cache policy.

- If the batteries are bad or missing, RAIDsets and mirrorsets are made inoperative.
- Write-back caching automatically resumes when the cache batteries are fully recharged or replaced.

CAUTION

There is some risk in setting CACHE_POLICY=B to allow access to mirrorsets and RAIDsets when the batteries are low. Because the batteries may be in an unknown state, there is no guarantee as to how long they will maintain data in the cache if a power failure occurs. Fully charged batteries will maintain the data for a minimum of 100 hours.

ID=*n*
Specifies the DSSI node number (0–7).

MSCP_ALLOCATION_CLASS=*n*
Specifies the allocation class (0–255 in a single controller configuration or 1–255 in a dual-redundant configuration).

When first installed, the controller's MSCP_ALLOCATION_CLASS is set to 0.

PATH
NOPATH
Enables or disables the DSSI port.

When first installed, NOPATH is set.

PROMPT="*new prompt*"
Specifies a 1- to 16-character prompt enclosed in quotes that will be displayed when the controller's CLI prompts for input. Only printable ASCII characters are valid.

When first installed, the CLI prompt is set to the first three letters of the controller's model number (for example, HSJ>, HSD> or HSZ>).

SCS_NODENAME="*xxxxxx*"
Specifies a one- to six-character name for node.

TERMINAL_PARITY=ODD
TERMINAL_PARITY=EVEN
NOTERMINAL_PARITY
Specifies the parity transmitted and expected. Parity options are ODD or EVEN. NOTERMINAL_PARITY causes the controller to not check for, or transmit any parity on the terminal lines.

When first installed, the controller's terminal parity is set to NOTERMINAL_PARITY.

TERMINAL_SPEED=*baud_rate*
Sets the terminal speed to 300, 600, 1200, 2400, 4800, 9600 or 19200 baud. The transmit speed is always equal to the receive speed.

When first installed, the controller's terminal speed is set to 9600 baud.

TMSCP_ALLOCATION_CLASS=*n*
Specifies the allocation class (0–255 in a single controller configuration or 1–255 in a dual-redundant configuration).

When first installed, the controller's TMSCP_ALLOCATION_CLASS is set to 0.

Qualifiers for HSJ Controllers

CI_ARBITRATION=ASYNCHRONOUS (Default)
CI_ARBITRATION=SYNCHRONOUS
ASYNCHRONOUS arbitration is currently (Version 2.5) implemented in HSJ HSOF.

SYNCHRONOUS is for future CI host adapters.

CACHE_FLUSH_TIMER=*n*
CACHE_FLUSH_TIMER=DEFAULT
Specifies how many seconds (1–65535) of idle time may elapse before the write-back cache flushes its entire contents to disk. After the specified time, the write-back cache flushes its contents to disk to ensure data integrity.

CACHE_POLICY=A (Default)
CACHE_POLICY=B
Allows selection of the write-back cache battery policy used by the controller. The policy affects the availability of RAIDsets and mirrorsets when the battery condition is low during controller intialization.

Changing this policy on one controller in a dual-redundant controller configuration automatically changes it on the other controller. The parameter change takes effect immediately.

The CACHE_POLICY setting affects RAIDsets and mirrorsets as follows:

- If the CACHE_POLICY on the controller is set to A and the batteries are low when the controller initializes, any RAIDset or mirrorset that does not have access to good batteries is made inoperative.
- If the CACHE_POLICY on the controller is set to B and the batteries are low when the controller initializes, any RAIDset or mirrorset that does not have access to good batteries is accessed in write-through (read cache) mode.

Regardless of the CACHE_POLICY setting, a low or bad battery affects controller operation:

- Stripesets and disk-based units with write-back caching enabled are accessed in write-through (read cache) mode, as long as unwritten cache data has not been lost.
- HSJ- and HSD-based RAIDsets and mirrorsets fail over to the companion cache in a dual-redundant configuration, provided the other cache's batteries are fully charged. RAIDsets and mirrorsets on HSZ and nonredundant controller systems will not fail over.

  If the batteries go low after controller initialization, unwritten cache data is flushed from the cache and any RAIDset or mirrorset that does not have access to good batteries is made inoperative, regardless of the cache policy.
- If the batteries are bad or missing, RAIDsets and mirrorsets are made inoperative.

- Write-back caching automatically resumes when the cache batteries are fully recharged or replaced.

CAUTION

There is some risk in setting CACHE_POLICY=B to allow access to mirrorsets and RAIDsets when the batteries are low. Because the batteries may be in an unknown state, there is no guarantee as to how long they will maintain data in the cache if a power failure occurs. Fully charged batteries will maintain the data for a minimum of 100 hours.

ID=*n*
Specifies the CI node number (0 through (MAX_NODES - 1)).

MAX_NODES=*n*
Specifies the maximum number of nodes (8, 16, or 32).

When first installed, the controller's MAX_NODES is set to 16.

MSCP_ALLOCATION_CLASS=*n*
Specifies the allocation class (0–255 in a single controller configuration or 1–255 in a dual-redundant configuration).

When first installed, the controller's MSCP_ALLOCATION_CLASS is set to 0.

PATH_A
NOPATH_A
Enables or disables CI Path A.

When first installed, NOPATH_A is set.

PATH_B
NOPATH_B
Enables or disables CI Path B.

When first installed, NOPATH_B is set.

PROMPT="*new prompt*"
Specifies a 1- to 16-character prompt enclosed in quotes that will be displayed when the controller's CLI prompts for input. Only printable ASCII characters are valid.

When first installed, the CLI prompt is set to the first three letters of the controller's model number (for example, HSJ>, HSD> or HSZ>).

SCS_NODENAME="*xxxxxx*"
Specifies a one- to six-character name for node.

TERMINAL_PARITY=ODD
TERMINAL_PARITY=EVEN
NOTERMINAL_PARITY
Specifies the parity transmitted and expected. Parity options are ODD or EVEN. NOTERMINAL_PARITY causes the controller to not check for, or transmit any parity on the terminal lines.

When first installed, the controller's terminal parity is set to NOTERMINAL_PARITY.

TERMINAL_SPEED=*baud_rate*
Sets the terminal speed to 300, 600, 1200, 2400, 4800, 9600 or 19200 baud. The transmit speed is always equal to the receive speed.

When first installed, the controller's terminal speed is set to 9600 baud.

TMSCP_ALLOCATION_CLASS=*n*
Specifies the allocation class (0–255 in a single controller configuration or 1–255 in a dual-redundant configuration).

When first installed, the controller's TMSCP_ALLOCATION_CLASS is set to 0.

Qualifiers for HSZ Controllers

CACHE_FLUSH_TIMER=*n*
CACHE_FLUSH_TIMER=DEFAULT
Specifies how many seconds (1–65535) of idle time may elapse before the write-back cache flushes its entire contents to disk. After the specified time, the write-back cache flushes its contents to disk to ensure data integrity.

CACHE_POLICY=A (Default)
CACHE_POLICY=B
Allows selection of the write-back cache battery policy used by the controller. The policy affects the availability of RAIDsets and mirrorsets when the battery condition is low during controller intialization.

Changing this policy on one controller in a dual-redundant controller configuration automatically changes it on the other controller. The parameter change takes effect immediately.

The CACHE_POLICY setting affects RAIDsets and mirrorsets as follows:

- If the CACHE_POLICY on the controller is set to A and the batteries are low when the controller initializes, any RAIDset or mirrorset that does not have access to good batteries is made inoperative.
- If the CACHE_POLICY on the controller is set to B and the batteries are low when the controller initializes, any RAIDset or mirrorset that does not have access to good batteries is accessed in write-through (read cache) mode.

Regardless of the CACHE_POLICY setting, a low or bad battery affects controller operation:

- Stripesets and disk-based units with write-back caching enabled are accessed in write-through (read cache) mode, as long as unwritten cache data has not been lost.
- HSJ- and HSD-based RAIDsets and mirrorsets fail over to the companion cache in a dual-redundant configuration, provided the other cache's batteries are fully charged. RAIDsets and mirrorsets on HSZ and nonredundant controller systems will not fail over.

  If the batteries go low after controller initialization, unwritten cache data is flushed from the cache and any RAIDset or mirrorset that does not have access to good batteries is made inoperative, regardless of the cache policy.
- If the batteries are bad or missing, RAIDsets and mirrorsets are made inoperative.

- Write-back caching automatically resumes when the cache batteries are fully recharged or replaced.

CAUTION

There is some risk in setting CACHE_POLICY=B to allow access to mirrorsets and RAIDsets when the batteries are low. Because the batteries may be in an unknown state, there is no guarantee as to how long they will maintain data in the cache if a power failure occurs. Fully charged batteries will maintain the data for a minimum of 100 hours.

ID=(*n1[,nN]*)
Specifies from one to four SCSI target IDs (0–7). If two or more target IDs are specified, they must be enclosed in parenthesis and separated by a comma.

Note

The unit number determines which target the LUN will be available under. For example, D203 would be target 2, LUN 3. D500 would be target 5, LUN 0. D5 would be target 0, LUN 5.

If two HSZ controllers are in a dual-redundant configuration, each controller will have the same IDs. When you change the IDs on one controller, the other will automatically be updated.

PREFERRED_ID=(*n1[,nN]*)
NOPREFERRED_ID
In a dual-redundant configuration, PREFERRED_ID defines which targets will be handled by the specified controller. If two or more PREFERRED_IDs are specified, they must be enclosed in parenthesis and separated by a comma. The only PREFERRED_IDs that can be specified must have already been configured using the ID= qualifier.

For example, if you configured a HSZ with IDs 0, 1, and 2, you could specify preferred ids 0, 1, and 2 in any combination on the two controllers. If one controller had preferred ids 0 and 1, it would handle unit numbers 0–7 and 100–107 and the other controller would handle unit numbers 200–207.

When you change the PREFERRED_IDs on one controller, the other controller will be automatically be updated to support the remaining (if any) IDs.

By specifying NOPREFERRED_ID the controller does not respond to any target ID on the host's SCSI bus. However, in a dual-redundant mode, if the controller with PREFERRED_IDs specified were to fail, the controller with NOPREFERRED_ID would pick up the targets of the failed controller.

PROMPT="*new prompt*"
Specifies a 1- to 16-character prompt enclosed in quotes that will be displayed when the controller's CLI prompts for input. Only printable ASCII characters are valid.

When first installed, the CLI prompt is set to the first three letters of the controller's model number (for example, HSJ>, HSD> or HSZ>).

TERMINAL_PARITY=ODD
TERMINAL_PARITY=EVEN
NOTERMINAL_PARITY
Specifies the parity transmitted and expected. Parity options are ODD or EVEN. NOTERMINAL_PARITY causes the controller to not check for, or transmit any parity on the terminal lines.

When first installed, the controller's terminal parity is set to NOTERMINAL_PARITY.

TERMINAL_SPEED=*baud_rate*
Sets the terminal speed to 300, 600, 1200, 2400, 4800, 9600 or 19200 baud. The transmit speed is always equal to the receive speed.

When first installed, the controller's terminal speed is set to 9600 baud.

TIME=*dd-mmm-yyyy:hh:mm:ss*
The TIME= commmand specifies the date and time. If the controller is in a dual-redundant configuration, the time is communicated to the other controller.

Examples

1.
```
CLI> SET THIS_CONTROLLER PATH_A PATH_B SPEED=1200
```
Modifies this HSJ controller's two CI paths and sets the terminal speed to 1200 baud.

2.
```
CLI> SET THIS_CONTROLLER ID=5
```
Sets this HSZ controller so it responds to requests for target 5.

3.
```
CLI> SET THIS_CONTROLLER ID=(2,5)
```
Sets this HSZ controller so it responds to requests for targets 2 and 5.

SET *unit-number*

Changes the unit parameters.

Format

SET *unit-number*

Parameters

unit-number
Specifies the logical unit number (for HSDs and HSJs D0–D4094 or T0–T4094, for HSZs D0–D7, D100-D107, and so forth) to modify the software switches. The *unit-number* is the name given the unit when it was created using the ADD UNIT command.

Description

The SET command is used to change logical unit parameters.

Qualifiers for a Unit Created from a CD–ROM Drive

MAXIMUM_CACHED_TRANSFER=*n*
MAXIMUM_CACHED_TRANSFER=32 (Default)
Specifies the maximum size transfer in blocks to be cached by the controller. Any transfers over this size are not cached. Valid values are 1–1024.

PREFERRED_PATH=THIS_CONTROLLER
PREFERRED_PATH=OTHER_CONTROLLER
NOPREFERRED_PATH (Default)

Note

The PREFERRED_PATH and NOPREFERRED_PATH qualifiers are valid for HSJ and HSD controllers only. The preferred path for HSZ controllers is determined by the unit number (the target portion of the unit number–the hundreds place) specified on the ADD UNIT command.

Specifies the preferred controller that the unit should be accessed through (PREFERRED_PATH=) or whether the unit may be accessed through either controller (NOPREFERRED_PATH).

The preferred path qualifier is used only if both controllers are running in a dual-redundant configuration. If one controller fails, then all the devices will be made accessible through the remaining controller, ignoring the preferred path setting.

When the failed controller is restarted, the drives automatically return to the controller specified by the preferred path qualifier.

Note

The PREFERRED_PATH qualifier may be specified on a single controller, however, the qualifier will not take effect until a second controller is added and the two controllers are configured for dual-redundancy. The second controller will inherit any PREFERRED_PATH settings, and the two controllers will operate using the preset PREFERRED_PATH options.

READ_CACHE (Default)
NOREAD_CACHE
Enables and disables the controller's read cache on this unit.

RUN (Default)
NORUN
Enables and disables a unit's availibility to the host. When RUN (default) is specified, the devices that make up the unit will be spun up and the unit will be made available to the host. If NORUN is specified, the devices that make up the unit will still be spun up, but the unit will not be made available to the host.

Qualifiers for a Unit Created from a TRANSPORTABLE Disk Drive

MAXIMUM_CACHED_TRANSFER=*n*
MAXIMUM_CACHED_TRANSFER=32 (Default)
Specifies the maximum size transfer in blocks to be cached by the controller. Any transfers over this size are not cached. Valid values are 1–1024.

PREFERRED_PATH=THIS_CONTROLLER
PREFERRED_PATH=OTHER_CONTROLLER
NOPREFERRED_PATH (Default)

Note

The PREFERRED_PATH and NOPREFERRED_PATH qualifiers are valid for HSJ and HSD controllers only. The preferred path for HSZ controllers is determined by the unit number (the target portion of the unit number–the hundreds place) specified on the ADD UNIT command.

Specifies the preferred controller that the unit should be accessed through (PREFERRED_PATH=) or whether the unit may be accessed through either controller (NOPREFERRED_PATH).

The preferred path qualifier is used only if both controllers are running in a dual-redundant configuration. If one controller fails, then all the devices will be made accessible through the remaining controller, ignoring the preferred path setting.

When the failed controller is restarted, the drives automatically return to the controller specified by the preferred path qualifier.

Note

The PREFERRED_PATH qualifier may be specified on a single controller, however, the qualifier will not take effect until a second controller is added and the two controllers are configured for dual-redundancy. The

second controller will inherit any PREFERRED_PATH settings, and the two controllers will operate using the preset PREFERRED_PATH options.

READ_CACHE (Default)
NOREAD_CACHE
Enables and disables the controller's read cache on this unit.

RUN (Default)
NORUN
Enables and disables a unit's availibility to the host. When RUN (default) is specified, the devices that make up the unit will be spun up and the unit will be made available to the host. If NORUN is specified, the devices that make up the unit will still be spun up, but the unit will not be made available to the host.

WRITE_PROTECT
NOWRITE_PROTECT (Default)
Enables and disables write protection of the unit.

Qualifiers for a Unit Created from a NOTRANSPORTABLE Disk Drive

MAXIMUM_CACHED_TRANSFER=*n*
MAXIMUM_CACHED_TRANSFER=32 (Default)
Specifies the maximum size transfer in blocks to be cached by the controller. Any transfers over this size are not cached. Valid values are 1–1024.

PREFERRED_PATH=THIS_CONTROLLER
PREFERRED_PATH=OTHER_CONTROLLER
NOPREFERRED_PATH (Default)

Note

The PREFERRED_PATH and NOPREFERRED_PATH qualifiers are valid for HSJ and HSD controllers only. The preferred path for HSZ controllers is determined by the unit number (the target portion of the unit number–the hundreds place) specified on the ADD UNIT command.

Specifies the preferred controller that the unit should be accessed through (PREFERRED_PATH=) or whether the unit may be accessed through either controller (NOPREFERRED_PATH).

The preferred path qualifier is used only if both controllers are running in a dual-redundant configuration. If one controller fails, then all the devices will be made accessible through the remaining controller, ignoring the preferred path setting.

When the failed controller is restarted, the drives automatically return to the controller specified by the preferred path qualifier.

Note

The PREFERRED_PATH qualifier may be specified on a single controller, however, the qualifier will not take effect until a second controller is added and the two controllers are configured for dual-redundancy. The

second controller will inherit any PREFERRED_PATH settings, and the two controllers will operate using the preset PREFERRED_PATH options.

READ_CACHE (Default)
NOREAD_CACHE
Enables and disables the controller's read cache on this unit.

RUN (Default)
NORUN
Enables and disables a unit's availibility to the host. When RUN (default) is specified, the devices that make up the unit will be spun up and the unit will be made available to the host. If NORUN is specified, the devices that make up the unit will still be spun up, but the unit will not be made available to the host.

WRITE_PROTECT
NOWRITE_PROTECT (Default)
Enables and disables write protection of the unit.

WRITEBACK_CACHE
NOWRITEBACK_CACHE (Default)
Enables and disables the controller's write-back cache on this unit.

Note

It may take up to 5 minutes to flush unwritten data from the write-back cache once you disable write-back caching.

Qualifiers for a Unit Created from a TRANSPORTABLE Optical Drive

MAXIMUM_CACHED_TRANSFER=*n*
MAXIMUM_CACHED_TRANSFER=32 (Default)
Specifies the maximum size transfer in blocks to be cached by the controller. Any transfers over this size are not cached. Valid values are 1–1024.

PREFERRED_PATH=THIS_CONTROLLER
PREFERRED_PATH=OTHER_CONTROLLER
NOPREFERRED_PATH (Default)

Note

The PREFERRED_PATH and NOPREFERRED_PATH qualifiers are valid for HSJ and HSD controllers only. The preferred path for HSZ controllers is determined by the unit number (the target portion of the unit number–the hundreds place) specified on the ADD UNIT command.

Specifies the preferred controller that the unit should be accessed through (PREFERRED_PATH=) or whether the unit may be accessed through either controller (NOPREFERRED_PATH).

The preferred path qualifier is used only if both controllers are running in a dual-redundant configuration. If one controller fails, then all the devices will be made accessible through the remaining controller, ignoring the preferred path setting.

When the failed controller is restarted, the drives automatically return to the controller specified by the preferred path qualifier.

Note

The PREFERRED_PATH qualifier may be specified on a single controller, however, the qualifier will not take effect until a second controller is added and the two controllers are configured for dual-redundancy. The second controller will inherit any PREFERRED_PATH settings, and the two controllers will operate using the preset PREFERRED_PATH options.

READ_CACHE (Default)
NOREAD_CACHE
Enables and disables the controller's read cache on this unit.

RUN (Default)
NORUN
Enables and disables a unit's availibility to the host. When RUN (default) is specified, the devices that make up the unit will be spun up and the unit will be made available to the host. If NORUN is specified, the devices that make up the unit will still be spun up, but the unit will not be made available to the host.

WRITE_PROTECT
NOWRITE_PROTECT (Default)
Enables and disables write protection of the unit.

Qualifiers for a Unit Created from a NOTRANSPORTABLE Optical Drive

MAXIMUM_CACHED_TRANSFER=*n*
MAXIMUM_CACHED_TRANSFER=32 (Default)
Specifies the maximum size transfer in blocks to be cached by the controller. Any transfers over this size are not cached. Valid values are 1–1024.

PREFERRED_PATH=THIS_CONTROLLER
PREFERRED_PATH=OTHER_CONTROLLER
NOPREFERRED_PATH (Default)

Note

The PREFERRED_PATH and NOPREFERRED_PATH qualifiers are valid for HSJ and HSD controllers only. The preferred path for HSZ controllers is determined by the unit number (the target portion of the unit number–the hundreds place) specified on the ADD UNIT command.

Specifies the preferred controller that the unit should be accessed through (PREFERRED_PATH=) or whether the unit may be accessed through either controller (NOPREFERRED_PATH).

The preferred path qualifier is used only if both controllers are running in a dual-redundant configuration. If one controller fails, then all the devices will be made accessible through the remaining controller, ignoring the preferred path setting.

When the failed controller is restarted, the drives automatically return to the controller specified by the preferred path qualifier.

Note

The PREFERRED_PATH qualifier may be specified on a single controller, however, the qualifier will not take effect until a second controller is added and the two controllers are configured for dual-redundancy. The second controller will inherit any PREFERRED_PATH settings, and the two controllers will operate using the preset PREFERRED_PATH options.

READ_CACHE (Default)
NOREAD_CACHE
Enables and disables the controller's read cache on this unit.

RUN (Default)
NORUN
Enables and disables a unit's availibility to the host. When RUN (default) is specified, the devices that make up the unit will be spun up and the unit will be made available to the host. If NORUN is specified, the devices that make up the unit will still be spun up, but the unit will not be made available to the host.

WRITE_PROTECT
NOWRITE_PROTECT (Default)
Enables and disables write protection of the unit.

WRITEBACK_CACHE
NOWRITEBACK_CACHE (Default)
Enables and disables the controller's write-back cache on this unit.

Note

It may take up to 5 minutes to flush unwritten data from the write-back cache once you disable write-back caching.

Qualifiers for a Unit Created from a RAIDset

MAXIMUM_CACHED_TRANSFER=*n*
MAXIMUM_CACHED_TRANSFER=32 (Default)
Specifies the maximum size transfer in blocks to be cached by the controller. Any transfers over this size are not cached. Valid values are 1–1024.

PREFERRED_PATH=THIS_CONTROLLER
PREFERRED_PATH=OTHER_CONTROLLER
NOPREFERRED_PATH (Default)

Note

The PREFERRED_PATH and NOPREFERRED_PATH qualifiers are valid for HSJ and HSD controllers only. The preferred path for HSZ controllers is determined by the unit number (the target portion of the unit number–the hundreds place) specified on the ADD UNIT command.

Specifies the preferred controller that the unit should be accessed through (PREFERRED_PATH=) or whether the unit may be accessed through either controller (NOPREFERRED_PATH).

The preferred path qualifier is used only if both controllers are running in a dual-redundant configuration. If one controller fails, then all the devices will be made accessible through the remaining controller, ignoring the preferred path setting.

When the failed controller is restarted, the drives automatically return to the controller specified by the preferred path qualifier.

Note

The PREFERRED_PATH qualifier may be specified on a single controller, however, the qualifier will not take effect until a second controller is added and the two controllers are configured for dual-redundancy. The second controller will inherit any PREFERRED_PATH settings, and the two controllers will operate using the preset PREFERRED_PATH options.

RUN (Default)
NORUN
Enables and disables a unit's availibility to the host. When RUN (default) is specified, the devices that make up the unit will be spun up and the unit will be made available to the host. If NORUN is specified, the devices that make up the unit will still be spun up, but the unit will not be made available to the host.

WRITE_PROTECT
NOWRITE_PROTECT (Default)
Enables and disables write protection of the unit.

Note

Writes may still be performed to a write-protected RAIDset to satisfy a reconstruct pass or to reconstruct a newly replaced member. However, write protect will disable the writing of any new data.

WRITEBACK_CACHE
NOWRITEBACK_CACHE (Default)
Enables and disables the controller's write-back cache on this unit.

Note

It may take up to 5 minutes to flush unwritten data from the write-back cache once you disable write-back caching.

Qualifiers for a Unit Created from a Stripeset

MAXIMUM_CACHED_TRANSFER=*n*
MAXIMUM_CACHED_TRANSFER=32 (Default)
Specifies the maximum size transfer in blocks to be cached by the controller. Any transfers over this size are not cached. Valid values are 1–1024.

PREFERRED_PATH=THIS_CONTROLLER
PREFERRED_PATH=OTHER_CONTROLLER
NOPREFERRED_PATH (Default)

Note

The PREFERRED_PATH and NOPREFERRED_PATH qualifiers are valid for HSJ and HSD controllers only. The preferred path for HSZ controllers is determined by the unit number (the target portion of the unit number–the hundreds place) specified on the ADD UNIT command.

Specifies the preferred controller that the unit should be accessed through (PREFERRED_PATH=) or whether the unit may be accessed through either controller (NOPREFERRED_PATH).

The preferred path qualifier is used only if both controllers are running in a dual-redundant configuration. If one controller fails, then all the devices will be made accessible through the remaining controller, ignoring the preferred path setting.

When the failed controller is restarted, the drives automatically return to the controller specified by the preferred path qualifier.

Note

The PREFERRED_PATH qualifier may be specified on a single controller, however, the qualifier will not take effect until a second controller is added and the two controllers are configured for dual-redundancy. The second controller will inherit any PREFERRED_PATH settings, and the two controllers will operate using the preset PREFERRED_PATH options.

READ_CACHE (Default)
NOREAD_CACHE
Enables and disables the controller's read cache on this unit.

RUN (Default)
NORUN
Enables and disables a unit's availibility to the host. When RUN (default) is specified, the devices that make up the unit will be spun up and the unit will be

made available to the host. If NORUN is specified, the devices that make up the unit will still be spun up, but the unit will not be made available to the host.

WRITE_PROTECT
NOWRITE_PROTECT (Default)
Enables and disables write protection of the unit.

WRITEBACK_CACHE
NOWRITEBACK_CACHE (Default)
Enables and disables the controller's write-back cache on this unit.

Note

It may take up to 5 minutes to flush unwritten data from the write-back cache once you disable write-back caching.

Qualifiers for a Unit Created from a Tape Drive (HSJ and HSD only)

DEFAULT_FORMAT=*format*
DEFAULT_FORMAT=DEVICE_DEFAULT (Default)
Specifies the tape format to be used unless overridden by the host. Note that not all devices support all formats. The easiest way to determine what formats are supported by a specific device is to enter the ''SHOW <tape unit number> DEFAULT_FORMAT= ?'' command—the valid options will be displayed.

Supported tape formats are as follows:

- DEVICE_DEFAULT (default)

  The default tape format is the default that the device uses, or, in the case of devices that can be set via switches on the front panel, the settings of those switches.
- 800BPI_9TRACK
- 1600BPI_9TRACK
- 6250BPI_9TRACK
- TZ85
- TZ86
- TZ87_NOCOMPRESSION
- TZ87_COMPRESSION
- DAT_NOCOMPRESSION
- DAT_COMPRESSION
- 3480_NOCOMPRESSION
- 3480_COMPRESSION

PREFERRED_PATH=THIS_CONTROLLER
PREFERRED_PATH=OTHER_CONTROLLER
NOPREFERRED_PATH (Default)

Note

The PREFERRED_PATH and NOPREFERRED_PATH qualifiers are valid for HSJ and HSD controllers only. The preferred path for HSZ controllers is determined by the unit number (the target portion of the unit number–the hundreds place) specified on the ADD UNIT command.

Specifies the preferred controller that the unit should be accessed through (PREFERRED_PATH=) or whether the unit may be accessed through either controller (NOPREFERRED_PATH).

The preferred path qualifier is used only if both controllers are running in a dual-redundant configuration. If one controller fails, then all the devices will be made accessible through the remaining controller, ignoring the preferred path setting.

When the failed controller is restarted, the drives automatically return to the controller specified by the preferred path qualifier.

Note

The PREFERRED_PATH qualifier may be specified on a single controller, however, the qualifier will not take effect until a second controller is added and the two controllers are configured for dual-redundancy. The second controller will inherit any PREFERRED_PATH settings, and the two controllers will operate using the preset PREFERRED_PATH options.

Examples

1.
```
CLI> SET D1 WRITE_PROTECT NOREAD_CACHE
```

   Sets the write protect and turns off the read cache on unit D1.

2.
```
CLI> SET T47 DEFAULT_FORMAT=1600BPI_9TRACK
```

   Sets unit T47 to 1600 bpi.

SHOW CDROMS

Shows all CD–ROM drives and drive information.

Format

SHOW CDROMS

Description

The SHOW CDROMS command displays all the CD–ROM drives known to the controller.

Qualifiers

FULL

If the FULL qualifier is specified, additional information may be displayed after each device.

Examples

1.
```
CLI> SHOW CDROM
Name          Type          Port Targ  Lun                    Used by
-------------------------------------------------------------------------------

CDROM230      cdrom            2    3    0                    D623
CDROM240      cdrom            2    4    0                    D624
```

Shows a basic listing of CD–ROMs.

2.
```
CLI> SHOW CDROM FULL
Name          Type          Port Targ  Lun                    Used by
-------------------------------------------------------------------------------

CDROM230      cdrom            2    3    0                    D623
          DEC      RRD44   (C) DEC  3593
CDROM240      cdrom            2    4    0                    D624
          DEC      RRD44   (C) DEC  3593
```

Shows a full listing of CD–ROMs.

SHOW *cdrom-container-name*

Shows information about a CD–ROM.

Format

SHOW *cdrom-container-name*

Parameters

cdrom-container-name
The name of the CD–ROM drive to be displayed.

Description

The SHOW *cdrom-container-name* command is used to show specific information about a particular CD–ROM drive.

Examples

1.
```
CLI> SHOW CDROM230
Name          Type          Port Targ  Lun                    Used by
-------------------------------------------------------------------------------

CDROM230      cdrom            2    3    0                    D623
          DEC      RRD44   (C) DEC  3593
```

A listing of CD–ROM CDROM230.

SHOW DEVICES

Shows physical devices and physical device information.

Format

SHOW DEVICES

Description

The SHOW DEVICES command displays all the devices known to the controller. First disks are shown, then tapes, then CDROMs and finally opticals.

Qualifiers

FULL

If the FULL qualifier is specified, additional information may be displayed after each device.

Information contained in the additional information is dependent on the device type.

Examples

1.
```
CLI> SHOW DEVICES
Name          Type          Port Targ  Lun                    Used by
-------------------------------------------------------------------------------

DI0           disk             1    0    0                    D100
DI1           disk             1    1    0                    D110
TAPE110       tape             3    1    0                    T110
TAPE130       tape             3    3    0                    T130
CDROM230      cdrom            2    3    0                    D623
CDROM240      cdrom            2    4    0                    D624
```

Shows a basic listing of devices attached to the controller.

2.
```
CLI> SHOW DEVICES FULL
Name          Type          Port Targ  Lun                    Used by
-------------------------------------------------------------------------------

DI0           disk             1    0    0                    D100
          DEC      RZ35     (C) DEC X388
DI1           disk             1    1    0                    D110
          DEC      RZ26     (C) DEC T386
TAPE110       tape             3    1    0                    T110
          DEC      TZ877    (C) DEC 930A
TAPE130       tape             3    3    0                    T130
          DEC      TZ877    (C) DEC 930A
CDROM230      cdrom            2    3    0                    D623
          DEC      RRD44   (C) DEC  3593
CDROM240      cdrom            2    4    0                    D624
          DEC      RRD44   (C) DEC  3593
```

Shows a full listing of devices attached to the controller.

SHOW DISKS

Shows all disk drives and drive information.

Format

SHOW DISKS

Description

The SHOW DISKS command displays all the disk drives known to the controller.

Qualifiers

FULL

If the FULL qualifier is specified, additional information may be displayed after each device.

Examples

1.
```
CLI> SHOW DISKS
Name          Type          Port Targ  Lun                    Used by
-------------------------------------------------------------------------------

DI0           disk             1    0    0                    D100
DI1           disk             1    1    0                    D110
```

Shows a basic listing of disks attached to the controller.

2.
```
CLI> SHOW DISKS FULL
Name          Type          Port Targ  Lun                    Used by
-------------------------------------------------------------------------------

DI0           disk             1    0    0                    D100
          DEC      RZ26     (C) DEC X388
        Switches:
          NOTRANSPORTABLE
        Size: 2050353 blocks
DI1           disk             1    1    0                    D110
          DEC      RZ26     (C) DEC T386
        Switches:
          NOTRANSPORTABLE
        Size: 2050353 blocks
```

Shows a full listing of disks attached to the controller.

SHOW *disk-container-name*

Shows information about a disk drive.

Format

SHOW *disk-container-name*

Parameters

disk-container-name
The name of the disk drive to be displayed.

Description

The SHOW *disk-container-name* command is used to show specific information about a particular disk.

Examples

1.
```
CLI> SHOW DI3
Name          Type          Port Targ  Lun                    Used by
-------------------------------------------------------------------------------

DI3           disk             1    3    0                   D130
          DEC      RZ26     (C) DEC X388
        Switches:
          NOTRANSPORTABLE
        Size: 2050353 blocks
```

Shows a listing of disk DI3.

SHOW FAILEDSET

Shows the members of the failedset.

Format

SHOW FAILEDSET

Description

The SHOW FAILEDSET command displays all the disk drives that are members of the failedset.

Examples

1.
```
CLI> SHOW FAILEDSET
Name          Storageset                    Uses             Used by
------------------------------------------------------------------------------

FAILEDSET     failedset                     DISK310
                                            DISK410
```

Shows a listing of the members of the failedset.

SHOW LOADERS

Note

This command is valid for HSJ and HSD controllers only.

Shows all loaders and loader information.

Format

SHOW LOADERS

Description

The SHOW LOADERS command displays all the loaders known to the controller.

Qualifiers

FULL
If the FULL qualifier is specified, additional information may be displayed after each device.

Examples

1.
```
CLI> SHOW LOADERS
Name          Type          Port Targ  Lun                    Used by
------------------------------------------------------------------------------
LDR511        loader           5    1    1                    CMD511
```

Basic listing of loaders.

2.
```
CLI> SHOW LOADERS FULL
Name          Type          Port Targ  Lun                    Used by
------------------------------------------------------------------------------

LDR511        loader           5    1    1                    CMD511
          DEC      TZ Media Changer 930A
```

Full listing of loaders.

SHOW *loader-container-name*

Note

This command is valid for HSJ and HSD controllers only.

Shows information about a loader.

Format

SHOW *loader-container-name*

Parameters

loader-container-name
The name of the loader to be displayed.

Description

The SHOW *loader-container-name* command is used to show specific information about a particular loader.

Examples

CLI> SHOW LDR511

1.
```
Name          Type          Port Targ  Lun                    Used by
------------------------------------------------------------------------------

LDR511        loader           5    1    1                    CMD511
          DEC      TZ Media Changer 930A
```

Listing of loader LDR511.

SHOW MIRRORSETS

Shows all configured mirrorsets and any mirrorset-specific data related only to mirrorsets.

Format

SHOW MIRRORSETS

Description

The SHOW MIRRORSETS command displays all the mirrorsets known to the controller.

Qualifiers

FULL

If the FULL qualifier is specified, additional information may be displayed after each mirrorset.

Examples

1.
```
CLI> SHOW MIRRORSETS
Name       Storageset          Uses                 Used by
-------------------------------------------------------------------------------
MIRR2      mirrorset           DISK110              STR0
                               DISK210
                               DISK310
                               DISK350

MIRR3      mirrorset           DISK120              STR0
                               DISK250

MIRR4      mirrorset           DISK330              STR0
```

MIRR2 is a four-member mirrorset. MIRR3 is a two-member mirrorset. MIRR4 is a one-member mirrorset. All three mirrorsets are members of stripeset STR0.

2.
```
CLI> SHOW MIRRORSETS FULL
Name          Storageset                    Uses             Used by
-------------------------------------------------------------------------------
MIRR2         mirrorset                     DISK110          STR0
                                            DISK210
                                            DISK310
                                            DISK350
        Switches:
          POLICY (for replacement) = BEST_PERFORMANCE
          COPY (priority) = NORMAL
          READ_SOURCE = LEAST_BUSY
          MEMBERSHIP = 4, 4 members present
        State:
          DISK210   (member  0) is NORMAL
          DISK310   (member  1) is NORMAL
          DISK350   (member  2) is NORMAL
          DISK110   (member  3) is NORMAL
        Size: 2050353 blocks
```

```
MIRR3         mirrorset                      DISK120          STR0
                                             DISK250
        Switches:
          POLICY (for replacement) = BEST_PERFORMANCE
          COPY (priority) = FAST
          READ_SOURCE = LEAST_BUSY
          MEMBERSHIP = 2, 2 members present
        State:
          DISK250   (member  0) is NORMAL
          DISK120   (member  1) is NORMAL
        Size: 4109470 blocks
MIRR4         mirrorset                      DISK330          STR0
        Switches:
          POLICY (for replacement) = BEST_PERFORMANCE
          COPY (priority) = NORMAL
          READ_SOURCE = LEAST_BUSY
          MEMBERSHIP = 1, 1 member present
        State:
          DISK330   (member  0) is NORMAL
        Size: 2050353 blocks
```

Shows extended information for all mirrorsets known to the controller.

SHOW *mirrorset-container-name*

Shows the same information as SHOW MIRRORSETS FULL except that it only displays information on the mirrorset specified by *mirrorset-container-name*.

Format

SHOW *mirrorset-container-name*

Parameters

mirrorset-container-name
The name of the mirrorset to be displayed.

Description

The SHOW *mirrorset-container-name* command is used to show specific information about a particular mirrorset.

Examples

1.
```
CLI> SHOW MIRR0

Name          Storageset                    Uses             Used by
------------------------------------------------------------------------------
MIRR0         mirrorset                     DISK130          D290
        Switches:
          NOPOLICY (for replacement)
          COPY (priority) = NORMAL
          READ_SOURCE = LEAST_BUSY
          MEMBERSHIP = 2, 1 member present
        State:
          DISK130   (member  0) is NORMAL
        Size: 4109470 blocks
```

Shows a complete listing of the mirrorset named MIRR0.

SHOW OPTICALS

Shows all optical drives and drive information.

Format

SHOW OPTICALS

Description

The SHOW OPTICALS command displays all the optical drives known to the controller.

Qualifiers

FULL

If the FULL qualifier is specified, additional information may be displayed after each device.

Examples

1.
```
CLI> SHOW OPTICALS
Name          Type          Port Targ  Lun                    Used by
-------------------------------------------------------------------------------

OP0           optical          1    0    0                    D100
OP1           optical          1    1    0                    D110
```

Shows a basic listing of optical drives attached to the controller.

2.
```
CLI> SHOW OPTICALS FULL
Name          Type          Port Targ  Lun                    Used by
-------------------------------------------------------------------------------

OP0           optical          1    0    0                    D100
          DEC      RWZ52     (C)DEC 3404
OP1           optical          1    1    0                    D110
          DEC      RWZ52     (C)DEC 3404
```

Shows a full listing of optical drives attached to the controller.

SHOW *optical-container-name*

Shows information about an optical drive.

Format

SHOW *optical-container-name*

Parameters

optical-container-name
The name of the optical drive to be displayed.

Description

The SHOW *optical-container-name* command is used to show specific information about a particular optical drive.

Examples

1.
```
CLI> SHOW OP3
Name          Type          Port Targ  Lun                    Used by
-------------------------------------------------------------------------------

OP3           optical          1    1    0                    D110
          DEC      RWZ52     (C)DEC 3404
```

Shows a listing of optical drive DI3.

SHOW OTHER_CONTROLLER

Shows information for the other controller.

Format

SHOW OTHER_CONTROLLER

Description

Shows all controller, port, and terminal information for the other controller.

Qualifiers

FULL

If the FULL qualifier is specified, additional information is displayed after the basic controller information.

Examples

1.
```
CLI> SHOW OTHER_CONTROLLER

Controller:
        HSJ40    (C) DEC ZG01234567 Firmware V2.5, Hardware 0000
        Configured for dual-redundancy with ZG00100101
            In dual-redundant configuration
        SCSI address 7
        Time: 14-FEB-1995 18:03:57
Host port:
        Node name: HSJA1, valid CI node 5, 32 max nodes
        System ID 4200100501AF
        Path A is ON
        Path B is ON
        MSCP allocation class    4
        TMSCP allocation class   4
        CI_ARBITRATION = ASYNCHRONOUS
Cache:
        16 megabyte write cache, version 2
        Cache is GOOD
        Battery is GOOD
        No unflushed data in cache

        CACHE_FLUSH_TIMER = DEFAULT (10 seconds)

 CACHE_POLICY = A
```

Shows the basic HSJ controller information.

2.
```
CLI> SHOW OTHER_CONTROLLER

Controller:
        HSD30    (C) DEC ZG33400022 Firmware V2.5, Hardware 0000
        Configured for dual-redundancy with ZG33400026
            In dual-redundant configuration
        SCSI address 6
        Time: 14-FEB-1995 18:23:27
Host port:
        Node name: HSD000, valid DSSI node 0
        Host path is ON
```

```
        MSCP allocation class    9
        TMSCP allocation class   9
Cache:
        32 megabyte write cache, version 2
        Cache is GOOD
        Battery is GOOD
        No unflushed data in cache

        CACHE_FLUSH_TIMER = DEFAULT (10 seconds)

        CACHE_POLICY = A
```

Shows the basic HSD controller information.

3.

```
CLI> SHOW OTHER_CONTROLLER

Controller:
        HSZ40    (C) DEC CX44332211 Firmware V2.5, Hardware 0000
        Configured for dual-redundancy with CX55555555
            In dual-redundant configuration
        SCSI address 6
        Time: NOT SET
Host port:
        SCSI target(s) (0, 1, 2, 3), Preferred target(s) (2, 3)
Cache:
        16 megabyte write cache, version 2
        Cache is GOOD
        Battery is GOOD
        No unflushed data in cache
        CACHE_FLUSH_TIMER = DEFAULT (10 seconds)
        CACHE_POLICY = A
```

Shows the basic HSZ controller information.

4.

```
CLI> SHOW OTHER_CONTROLLER FULL

Controller:
        HSJ40    (C) DEC ZG01234567 Firmware V2.5, Hardware 0000
        Configured for dual-redundancy with ZG00100101
            In dual-redundant configuration
        SCSI address 7
        Time: 14-FEB-1995 18:03:57
Host port:
        Node name: HSJA1, valid CI node 5, 32 max nodes
        System ID 4200100501AF
        Path A is ON
        Path B is ON
        MSCP allocation class    4
        TMSCP allocation class   4
        CI_ARBITRATION= ASYNCHRONOUS
Cache:
        16 megabyte write cache, version 2
        Cache is GOOD
        Battery is GOOD
        No unflushed data in cache
        CACHE_FLUSH_TIMER = DEFAULT (10 seconds)
Licensing information:
        RAID (Raid option) is ENABLED, license key is VALID
        WBCA (Writeback Cache option) is ENABLED, license key is VALID
Extended information:
        Terminal speed 19200 baud, eight bit, no parity, 1 stop bit
        Operation control: 00000005  Security state code: 41891
```

Shows a full HSJ controller information listing.

SHOW PASSTHROUGH

Shows passthrough containers and container information.

Format

SHOW PASSTHROUGH

Description

The SHOW PASSTHROUGH command displays all the passthrough containers known by the controller.

Qualifiers

FULL

If the FULL qualifier is specified, additional information may be displayed after each storageset.

Examples

1.
```
CLI> SHOW PASSTHROUGH
MASS> sho pass
Name          Storageset                    Uses             Used by
-------------------------------------------------------------------------------

CMD100        passthrough                   DISK100          D610
CMD240        passthrough                   DISK240          D624
CMD310        passthrough                   CD310            D631
CMD320        passthrough                   CD320            D632
CMD640        passthrough                   LDR400           D640
```

Shows a listing of all passthrough containers.

SHOW *passthrough-container-name*

Shows information about a passthrough container.

Format

SHOW *passthrough-container-name*

Parameters

passthrough-container-name
The name of the passthrough container to be displayed.

Description

The SHOW *passthrough-container-name* command is used to show specific information about a passthrough container.

Examples

1.
```
CLI> SHOW CMD100
MASS> sho pass
Name          Storageset                    Uses             Used by
------------------------------------------------------------------------------

CMD100        passthrough                   DISK100          D610
```

Shows a listing of passthrough container CMD100.

SHOW RAIDSETS

Shows RAIDsets and RAIDset information.

Format

SHOW RAIDSETS

Description

The SHOW RAIDSETS command displays all the RAIDsets known by the controller.

Qualifiers

FULL

If the FULL qualifier is specified, additional information may be displayed after each storageset.

Examples

1.
```
CLI> SHOW RAIDSETS
Name          Storageset                    Uses             Used by
------------------------------------------------------------------------------

R0            raidset                       DISK110          D401
                                            DISK220
                                            DISK310
                                            DISK400

R1            raidset                       DISK130
                                            DISK240
                                            DISK330
                                            DISK420
```

Shows a basic listing of all RAIDsets.

2.
```
CLI> SHOW RAIDSETS FULL
Name          Storageset                    Uses             Used by
------------------------------------------------------------------------------

R0            raidset                       DISK110          D401
                                            DISK220
                                            DISK310
                                            DISK400
        Switches:
          POLICY (for replacement) = BEST_PERFORMANCE
          RECONSTRUCT (priority) = NORMAL
          CHUNKSIZE = 63 blocks
        State:
          RECONSTRUCT 3% complete
          DISK220   (member  0) is RECONSTRUCTING
          DISK310   (member  1) is RECONSTRUCTING
          DISK400   (member  2) is RECONSTRUCTING
        Size: 2050353 blocks
```

SHOW RAIDSETS

```
R1            raidset                          DISK130
                                               DISK240
                                               DISK330
                                               DISK420
        Switches:
          POLICY (for replacement) = BEST_PERFORMANCE
          RECONSTRUCT (priority) = NORMAL
          CHUNKSIZE = 63 blocks
        State:
          NORMAL
          DISK130   (member  0) is NORMAL
          DISK240   (member  1) is NORMAL
          DISK330   (member  2) is NORMAL
          DISK420   (member  3) is NORMAL
        Size: 2050353 blocks
```

Shows a full listing of all RAIDsets.

SHOW *raidset-container-name*

Shows information about a RAIDset.

Format

SHOW *raidset-container-name*

Parameters

raidset-container-name
The name of the RAIDset to be displayed.

Description

The SHOW *raidset-container-name* command is used to show specific information about a particular RAIDset.

Examples

1.
```
CLI> SHOW RAID9
Name          Storageset                      Uses             Used by
-------------------------------------------------------------------------------

RAID9         raidset                         DISK130
                                              DISK240
                                              DISK330
                                              DISK420
        Switches:
          POLICY (for replacement) = BEST_PERFORMANCE
          RECONSTRUCT (priority) = NORMAL
          CHUNKSIZE = 63 blocks
        State:
          NORMAL
          DISK130   (member  0) is NORMAL
          DISK240   (member  1) is NORMAL
          DISK330   (member  2) is NORMAL
          DISK420   (member  3) is NORMAL
        Size: 2050353 blocks
```

Shows a listing of RAIDset RAID9.

SHOW SPARESET

Shows the members of the spareset.

Format

SHOW SPARESET

Description

The SHOW SPARESET command displays all the disk drives that are members of the spareset.

Examples

1.
```
CLI> SHOW SPARESET
Name          Storageset                    Uses             Used by
------------------------------------------------------------------------------

SPARESET      spareset                      DISK150
                                            DISK350
                                            DISK440
```

Shows a list of the members of the spareset.

SHOW STORAGESETS

Shows storagesets and storageset information.

Format

SHOW STORAGESETS

Description

The SHOW STORAGESETS command displays all the storagesets known by the controller. A storageset is any collection of containers, such as stripesets, mirrorsets, RAIDsets, the spareset and the failedset.

Stripesets are displayed first, followed by mirrorsets, RAIDsets, sparesets, failedsets, and then passthrough containers.

Qualifiers

FULL

If the FULL qualifier is specified, additional information may be displayed after each storageset.

Examples

1.
```
CLI> SHOW STORAGESETS
Name          Storageset                    Uses             Used by
-------------------------------------------------------------------------------

S0            stripeset                     DISK500          D1
                                            DISK510
                                            DISK520
```

Shows a basic listing of all storagesets.

2.
```
CLI> SHOW STORAGESETS FULL
Name          Storageset                    Uses             Used by
-------------------------------------------------------------------------------

S0            stripeset                     DISK530
                                            DISK550
                                            DISK600

        Switches:
          CHUNKSIZE = 24 blocks
        State:
          NORMAL
          DISK530   (member  0) is NORMAL
          DISK550   (member  1) is NORMAL
          DISK600   (member  2) is NORMAL
        Size: 2050353 blocks
```

SHOW STORAGESETS

```
S1            stripeset                     DISK620
                                            DISK640
        Switches:
          CHUNKSIZE = 24 blocks
        State:
          NORMAL
          DISK620   (member  0) is NORMAL
          DISK640   (member  1) is NORMAL
        Size: 31304354 blocks

R0            raidset                       DISK110          D401
                                            DISK220
                                            DISK310
                                            DISK400
        Switches:
          POLICY (for replacement) = BEST_PERFORMANCE
          RECONSTRUCT (priority) = NORMAL
          CHUNKSIZE = 63 blocks
        State:
          NORMAL
          DISK110   (member  0) is NORMAL
          DISK220   (member  1) is NORMAL
          DISK310   (member  2) is NORMAL
          DISK400   (member  3) is NORMAL
        Size: 2050353 blocks

R1            raidset                       DISK130
                                            DISK240
                                            DISK330
                                            DISK420
        Switches:
          POLICY (for replacement) = BEST_PERFORMANCE
          RECONSTRUCT (priority) = NORMAL
          CHUNKSIZE = 63 blocks
        State:
          NORMAL
          DISK130   (member  0) is NORMAL
          DISK240   (member  1) is NORMAL
          DISK330   (member  2) is NORMAL
          DISK420   (member  3) is NORMAL
        Size: 2050353 blocks

SPARESET      spareset                      DISK150
                                            DISK350
                                            DISK440

FAILEDSET     failedset

CMD100        passthrough                   DISK100          D610

CMD240        passthrough                   DISK250          D624

CMD310        passthrough                   CD310            D631
```

Shows a full listing of all storagesets.

SHOW STRIPESETS

Shows stripesets and related stripeset information.

Format

SHOW STRIPESETS

Description

The SHOW STRIPESET command displays all the stripesets known by the controller.

Qualifiers

FULL

If the FULL qualifier is specified, additional information may be displayed after each storageset.

Examples

1.
```
CLI> SHOW STRIPESETS
Name          Storageset                    Uses             Used by
-------------------------------------------------------------------------------

S0            stripeset                     DISK500          D1
                                            DISK510
                                            DISK520

S1            stripeset                     DISK400          D17
                                            DISK410
                                            DISK420
```

Shows a basic listing of all stripesets.

2.
```
CLI> SHOW STRIPESETS FULL
Name          Storageset                    Uses             Used by
-------------------------------------------------------------------------------

S0            stripeset                     DISK530
                                            DISK550
                                            DISK600

        Switches:
          CHUNKSIZE = 24 blocks
        State:
          NORMAL
          DISK530   (member  0) is NORMAL
          DISK550   (member  1) is NORMAL
          DISK600   (member  2) is NORMAL
        Size: 2050353 blocks
```

SHOW STRIPESETS

```
S1            stripeset                      DISK620
                                             DISK640
        Switches:
          CHUNKSIZE = 24 blocks
        State:
          NORMAL
          DISK620   (member  0) is NORMAL
          DISK640   (member  1) is NORMAL
        Size: 2050353 blocks
```

Shows a full listing of all stripesets.

SHOW *stripeset-container-name*

Shows information about a specific stripeset.

Format

SHOW *stripeset-container-name*

Parameters

stripeset-container-name
The name of the stripeset to be displayed.

Description

The SHOW *stripeset-container-name* command is used to show specific information about a particular stripeset.

Examples

1.
```
CLI> SHOW STRIPE0
Name          Storageset                      Uses             Used by
------------------------------------------------------------------------------

STRIPE0       stripeset                       DISK530
                                              DISK550
                                              DISK600
        Switches:
          CHUNKSIZE = 24 blocks
        State:
          NORMAL
          DISK530   (member  0) is NORMAL
          DISK550   (member  1) is NORMAL
          DISK600   (member  2) is NORMAL
        Size: 2050353 blocks
```

Shows a listing of stripeset STRIPE0.

SHOW TAPES

Note

This command is valid for HSJ and HSD controllers only.

Shows all tape drives and tape drive information.

Format

SHOW TAPES

Description

The SHOW TAPES command displays all the tape drives known to the controller.

Qualifiers

FULL
If the FULL qualifier is specified, additional information may be displayed after each device.

Examples

1.
```
CLI> SHOW TAPES
Name          Type          Port Targ  Lun                    Used by
------------------------------------------------------------------------------

TAPE200       tape             2    0    0
```

Shows a basic listing of tape drives.

2.
```
CLI> SHOW TAPES FULL
Name          Type          Port Targ  Lun                    Used by
------------------------------------------------------------------------------

TAPE200       tape             2    0    0
          DEC      TLZ06     (C)DEC 0491
```

Shows a full listing of tape drives.

SHOW *tape-container-name*

Note

This command is valid for HSJ and HSD controllers only.

Shows information about a specific tape drive.

Format

SHOW *tape-container-name*

Parameters

tape-container-name
The name of the tape drive to be displayed.

Description

The SHOW *tape-container-name* command is used to show specific information about a particular tape drive.

Examples

1.
```
HSJB0> SHOW TAPE200
Name          Type          Port Targ  Lun                    Used by
-------------------------------------------------------------------------------

TAPE200       tape            2    0    0
          DEC      TLZ06     (C)DEC 0491
```

Shows a listing of TAPE200.

SHOW THIS_CONTROLLER

Shows information for this controller.

Format

SHOW THIS_CONTROLLER

Description

Shows all controller, port, and terminal information for this controller.

Qualifiers

FULL

If the FULL qualifier is specified, additional information is displayed after the basic controller information.

Examples

1.
```
CLI> SHOW THIS_CONTROLLER

Controller:
        HSJ40    (C) DEC ZG00100101 Firmware XMDV-0, Hardware 0000
        Configured for dual-redundancy with ZG01234567
            In dual-redundant configuration
        SCSI address 6
        Time: 18-AUG-1994 18:02:39
Host port:
        Node name: FREDDY, valid CI node 3, 32 max nodes
        System ID 420010031B85
        Path A is ON
        Path B is ON
        MSCP allocation class    4
        TMSCP allocation class   4
        CI_ARBITRATION= ASYNCHRONOUS
Cache:
        16 megabyte write cache, version 2
        Cache is GOOD
        Battery is GOOD
        No unflushed data in cache
        CACHE_FLUSH_TIMER = DEFAULT (10 seconds)
```

Shows the basic HSJ controller information.

2.
```
CLI> SHOW THIS_CONTROLLER

Controller:
        HSD30    (C) DEC ZG33400026 Firmware XMDV-0, Hardware 0000
        Configured for dual-redundancy with ZG33400022
            In dual-redundant configuration
        SCSI address 7
        Time: 18-AUG-1994 18:23:55
Host port:
        Node name: HSD001, valid DSSI node 1
        Host path is ON
        MSCP allocation class    9
        TMSCP allocation class   9
Cache:
        32 megabyte write cache, version 2
        Cache is GOOD
        Battery is GOOD
        No unflushed data in cache
        CACHE_FLUSH_TIMER = DEFAULT (10 seconds)
```

Shows the basic HSD controller information.

3.
```
CLI> SHOW THIS_CONTROLLER

Controller:
        HSZ40    (C) DEC CX44332211 Firmware XVDV-0, Hardware 0000
        Configured for dual-redundancy with CX55555555
            In dual-redundant configuration
        SCSI address 6
        Time: NOT SET
Host port:
        SCSI target(s) (0, 1, 2, 3), Preferred target(s) (2, 3)
Cache:
        16 megabyte write cache, version 2
        Cache is GOOD
        Battery is GOOD
        No unflushed data in cache
        CACHE_FLUSH_TIMER = DEFAULT (10 seconds)
```

Shows the basic HSZ controller information.

4.
```
CLI> SHOW THIS_CONTROLLER FULL

Controller:
        HSJ40    (C) DEC ZG00100101 Firmware XMDV-0, Hardware 0000
        Configured for dual-redundancy with ZG01234567
            In dual-redundant configuration
        SCSI address 6
        Time: 18-AUG-1994 18:02:39
Host port:
        Node name: FREDDY, valid CI node 3, 32 max nodes
        System ID 420010031B85
        Path A is ON
        Path B is ON
        MSCP allocation class    4
        TMSCP allocation class   4
        CI_ARBITRATION= ASYNCHRONOUS
Cache:
        16 megabyte write cache, version 2
        Cache is GOOD
        Battery is GOOD
        No unflushed data in cache
        CACHE_FLUSH_TIMER = DEFAULT (10 seconds)
Licensing information:
        RAID (Raid5 + Writeback Cache) is ENABLED, license key is VALID
        WBCA (Writeback Cache ONLY) is ENABLED, license key is VALID
Extended information:
        Terminal speed 19200 baud, eight bit, no parity, 1 stop bit
        Operation control: 00000005  Security state code: 67110
```

Shows a full listing of HSJ controller information.

SHOW UNITS

Shows all units and unit information.

Format

SHOW UNITS

Description

The SHOW UNITS command displays all the units known by the controller. First disks (including CDROMs) are listed, then tapes.

Qualifiers

FULL

If the FULL qualifier is specified after UNITS, additional information may be displayed after each unit-number, such as the switch settings.

Examples

1.
```
CLI> SHOW UNITS
MSCP unit                                       Uses
---------------------------------------------------------------

  D401                                          R0
  T41                                           TAPE200
```

Shows a basic listing of units available on the controller.

2.
```
CLI> SHOW UNITS FULL
MSCP unit                                       Uses
---------------------------------------------------------------

  D401                                          R0
        Switches:
          RUN                    NOWRITE_PROTECT        READ_CACHE
          NOWRITEBACK_CACHE
          MAXIMUM_CACHED_TRANSFER_SIZE = 32
        State:
          AVAILABLE
          No exclusive access
          NOPREFERRED_PATH
        Size: 2050353 blocks
  T41                                           TAPE200
        Switches:
          DEFAULT_FORMAT = DEVICE_DEFAULT
        State:
          AVAILABLE
          No exclusive access
          Current Format = DAT_DDS_NOCOMPRESSION
          NOPREFERRED_PATH
```

Shows a full listing of units available on the controller.

SHOW *unit-number*

Shows information about a specific unit.

Format

SHOW *unit-number*

Parameters

unit-number
The unit number of the unit that is to be displayed.

Description

The SHOW *unit-number* command is used to show specific information about a particular unit.

Examples

1.
```
CLI> SHOW D150
MSCP unit                                       Uses
---------------------------------------------------------------

  D150                                          R0
        Switches:
          RUN                    NOWRITE_PROTECT        READ_CACHE
          NOWRITEBACK_CACHE
          MAXIMUM_CACHED_TRANSFER_SIZE = 32
        State:
          AVAILABLE
          No exclusive access
          NOPREFERRED_PATH
        Size: 2050353 blocks
```

Shows a listing of a specific disk unit.

2.
```
CLI> sho T110
MSCP unit                                       Uses
---------------------------------------------------------------

  T110                                          TAPE200
        Switches:
          DEFAULT_FORMAT = DEVICE_DEFAULT
        State:
          AVAILABLE
          No exclusive access
          Current Format = DAT_DDS_NOCOMPRESSION
          NOPREFERRED_PATH
```

Shows a listing of a specific tape unit.

SHUTDOWN OTHER_CONTROLLER

Shuts down and does not restart the other controller.

Format

SHUTDOWN OTHER_CONTROLLER

Description

The SHUTDOWN OTHER_CONTROLLER command flushes all user data from the other controller's write-back cache (if present), then shuts down the other controller.

If any disks are online to the other controller, the controller does not shut down unless the OVERRIDE_ONLINE qualifier is specified (HSD and HSJ only). If any user data cannot be flushed to disk, the controller does not shut down unless the IGNORE_ERRORS qualifier is specified.

Specifying IMMEDIATE causes the other controller to shut down immediately without flushing any user data to the disks, even if drives are online to the host.

Qualifiers for HSD and HSJ Controllers

IGNORE_ERRORS
NOIGNORE_ERRORS (Default)
If errors result when trying to write user data, the controller is not shut down unless IGNORE_ERROR is specified.

If the IGNORE_ERRORS qualifier is specified, the controller shuts down even if all customer data cannot be written to disk from the write-back cache.

CAUTION

Customer data may be lost or corrupted if the IGNORE_ERRORS qualifier is specified.

IMMEDIATE_SHUTDOWN
NOIMMEDIATE_SHUTDOWN (Default)
If IMMEDIATE is specified, the controller shuts down immediately without checking for online devices or flushing user data from write-back cache to disk.

CAUTION

Customer data may be lost or corrupted if the IMMEDIATE qualifier is specified.

OVERRIDE_ONLINE
NOOVERRIDE_ONLINE (Default)
If any units are online to the controller, the controller is not shutdown unless OVERRIDE_ONLINE is specified.

SHUTDOWN OTHER_CONTROLLER

If the OVERRIDE_ONLINE qualifier is specified, the controller shuts down after all customer data is written to disk.

CAUTION

Customer data may be lost or corrupted if the OVERRIDE_ONLINE qualifier is specified.

Qualifiers for HSZ Controllers

IGNORE_ERRORS
NOIGNORE_ERRORS (Default)
If errors result when trying to write user data, the controller is not shut down unless IGNORE_ERROR is specified.

If the IGNORE_ERRORS qualifier is specified, the controller shuts down even if all customer data cannot be written to disk from the write-back cache.

CAUTION

Customer data may be lost or corrupted if the IGNORE_ERRORS qualifier is specified.

IMMEDIATE_SHUTDOWN
NOIMMEDIATE_SHUTDOWN (Default)
If IMMEDIATE is specified, the controller shuts down immediately without checking for online devices or flushing user data from write-back cache to disk.

CAUTION

Customer data may be lost or corrupted if the IMMEDIATE qualifier is specified.

Examples

1. `CLI> SHUTDOWN OTHER_CONTROLLER`

   Shuts down the other controller as long as the other controller does not have any units online.

2. `CLI> SHUTDOWN OTHER_CONTROLLER OVERRIDE_ONLINE`

   Shuts down the other controller even if there are units online to the other controller.

SHUTDOWN THIS_CONTROLLER

Shuts down and does not restart this controller.

Format

SHUTDOWN THIS_CONTROLLER

Description

The SHUTDOWN THIS_CONTROLLER command flushes all user data from this controller's write-back cache (if present), then shuts down this controller.

If any disks are online to this controller, the controller does not shut down unless the OVERRIDE_ONLINE qualifier is specified (HSD and HSJ only). If any user data cannot be flushed to disk, the controller does not shut down unless the IGNORE_ERRORS qualifier is specified.

Specifying IMMEDIATE causes this controller to shut down immediately without flushing any user data to the disks, even if drives are online to a host.

Note

If you issue a SHUTDOWN THIS_CONTROLLER command, communication with the controller is lost when this controller shuts down.

Qualifiers for HSD and HSJ Controllers

IGNORE_ERRORS
NOIGNORE_ERRORS (Default)
If errors result when trying to write user data, the controller is not shut down unless IGNORE_ERROR is specified.

If the IGNORE_ERRORS qualifier is specified, the controller shuts down even if all customer data cannot be written to disk from the write-back cache.

CAUTION

Customer data may be lost or corrupted if the IGNORE_ERRORS qualifier is specified.

IMMEDIATE_SHUTDOWN
NOIMMEDIATE_SHUTDOWN (Default)
If IMMEDIATE is specified, the controller shuts down immediately without checking for online devices or flushing user data from write-back cache to disk.

CAUTION

Customer data may be lost or corrupted if the IMMEDIATE qualifier is specified.

SHUTDOWN THIS_CONTROLLER

OVERRIDE_ONLINE
NOOVERRIDE_ONLINE (Default)
If any units are online to the controller, the controller is not shutdown unless OVERRIDE_ONLINE is specified.

If the OVERRIDE_ONLINE qualifier is specified, the controller shuts down after all customer data is written to disk.

CAUTION

Customer data may be lost or corrupted if the OVERRIDE_ONLINE qualifier is specified.

Qualifiers for HSZ Controllers

IGNORE_ERRORS
NOIGNORE_ERRORS (Default)
If errors result when trying to write user data, the controller is not shut down unless IGNORE_ERROR is specified.

If the IGNORE_ERRORS qualifier is specified, the controller shuts down even if all customer data cannot be written to disk from the write-back cache.

CAUTION

Customer data may be lost or corrupted if the IGNORE_ERRORS qualifier is specified.

IMMEDIATE_SHUTDOWN
NOIMMEDIATE_SHUTDOWN (Default)
If IMMEDIATE is specified, the controller shuts down immediately without checking for online devices or flushing user data from write-back cache to disk.

CAUTION

Customer data may be lost or corrupted if the IMMEDIATE qualifier is specified.

Examples

1. `CLI> SHUTDOWN THIS_CONTROLLER`

   Shuts down this controller as long as this controller does not have any units online.

2. `CLI> SHUTDOWN THIS_CONTROLLER OVERRIDE_ONLINE`

   Shuts down this controller even if there are units online to this controller.

UNMIRROR *disk-device-name*

Converts a one-member mirrorset back to a single device and deletes the mirrorset from the list of known mirrorsets.

Format

UNMIRROR *disk-device-name*

Description

Allows you to convert a mirrorset with one disk, specified by the disk name, *disk-device-name*, to a physical device. This command can be used on mirrorsets that are already members of higher level containers (stripesets or units).

Examples

1.
```
CLI> UNMIRROR DISK130
```

   Converts a DISK130 back to a single device. An error message prints if the disk is not a mirrorset.

B.2 CLI Messages

The following sections describe messages you can encounter during interactive use of the CLI.

B.2.1 Error Conventions

An Error *nnnn:* message means that the command did not complete. Except for a few of the failover messages (6000 series), no part of the command was executed. When encountering an error entering or exiting dual-redundant mode, some synchronization problems are unavoidable; the error message in such a case tells you what to do to get things back in synchronization.

Multiple error messages may result from one command.

Items in angle brackets (<>) are replaced at run time with names, numbers, and so on.

B.2.2 CLI Error Messages

Error 1000: The LUN portion of the unit number must be from 0 to 7
(for HSZ controllers)

Error 1000: Unit number must be from 0 to 4094
(for HSJ and HSD30 controller)

Explanation: This error results from an ADD UNIT command when the *n* in the D*n* or T*n* specified is out of range. The MSCP or TMSCP unit number after the ''D'' or ''T'' must be in the range of 0 to 4094.

Retry the ADD UNIT command with a correct number.

Error 1010: Maximum cached transfer size must be 1 through 1024 blocks

Explanation: This error results from a SET <unit number> or an ADD UNIT command when MAXIMUM_CACHED_TRANSFER_SIZE was specified. MAXIMUM_CACHED_TRANSFER_SIZE must be in the range 1 through 1024. Retry the SET or ADD command with a correct number.

Error 1020: CHUNKSIZE must be from <minimum> to <maximum>

Explanation: This error results from an INITIALIZE *storageset-container-name* command when CHUNKSIZE was specified. The chunk size must be DEFAULT or greater than 15. Retry the INITIALIZE command with DEFAULT or a correct number.

Error 1090: Tape unit numbers must start with the letter 'T'

Explanation: All tape unit numbers are of the form ''T*n*.'' This error is displayed if you add a tape unit that does not begin the unit number with the letter ''T.''

Retry the ADD command with the letter ''T'' at the start of the unit number.

Error 1100: Disk unit numbers must start with the letter 'D'

Explanation: All disk unit numbers are of the form ''D*n*.'' This error is displayed if you add a disk unit that does not begin the unit number with the letter ''D.''

Retry the ADD command with the letter ''D'' at the beginning of the unit number.

Error 1110: Unit numbers may not have leading zeros

Explanation: Tape and disk unit numbers may not be of the form ‘‘D03,’’ for example, ‘‘D3’’ should be specified.

Retry the ADD command without any leading zeros.

Error 1120: LUN <lun> is already used

Explanation: Lun number <lun> has already been used by a disk.

Retry the ADD command specifying a different LUN.

Error 1130: The unit number cannot exceed <max unit>

Explanation: You specified a unit number that was out-of-bounds.

Try to add the unit again using a unit number that is less than or equal to <max unit>.

Error 1140: Invalid unit number. Valid unit number range(s) are: <start> to <end>

Explanation: You attempted to create a unit out of the valid unit ranges. The valid unit ranges are given by the <start> and <end> values.

Retry the ADD command specifying a unit number in the correct range.

Error 1150: A restart of THIS_CONTROLLER is required before units may be added

Explanation: You changed the target IDs that THIS_CONTROLLER supports without restarting the controller, then tried to add a unit that is supported by the new target IDs. Before the new target ids may be used, a restart is required.

Restart the controller.

Error 1160: A restart of OTHER_CONTROLLER is required before units may be added

Explanation: You changed the target IDs that the OTHER_CONTROLLER supports without restarting the controller, then tried to add a unit that is supported by the new target IDs. Before the new target ids may be used, a restart is required.

Restart the controller.

Error 2000: Port must be 1 - <maximum port number>

Explanation: When adding a device, you specified a port less than 1 or greater than <maximum port number>.

Retry the command specifying a port within the range given.

Error 2010: Target must be 0 - <maximum target number>

Explanation: When adding a device, you specified a target greater than <maximum target number>.

In single controller configurations, <maximum target number> is 6. In dual-redundant configurations, <maximum target number> is 5.

Error 2020: LUN must be 0 - 7

Explanation: When adding a device, you specified a LUN greater than 7.

Error 2030: This port, target LUN combination already in use by another device

Explanation: When adding a device, you specified PTL that is already specified by another device.

Error 2040: Cannot set TRANSPORTABLE when device in use by an upper layer

Explanation: A disk cannot be set to TRANSPORTABLE when it is being used by an upper level (unit or storageset).

Error 2050: Cannot set NOTRANSPORTABLE when device in use by an upper layer

Explanation: A disk cannot be set to NOTRANSPORTABLE when it is being used by an upper level (unit or storageset).

Error 2060: Can only clear UNKNOWN errors on a device

Explanation: You attempted to clear UNKNOWN on a storageset or a unit.

Check the name of the device and reissue the command.

Error 3000: Cannot INITIALIZE a PASSTHROUGH device

Explanation: You cannot initialize a passthrough device.

Error 3020: Cannot add <disk name>; This will cause too many members in MIRRORSET <mirrorset name>. Use a SET <mirrorset name> MEMBERSHIP=<new count> to command increase the membership count first

Explanation: You can not add more disks to a mirrorset than is specified by the mirrorset's membership count. In order to successfully do a SET <mirrorset name> REPLACE=<disk name>, to a ''full'' mirrorset, you must first increase the mirrorset count.

Error 3030: <disk name> is not a member of <mirrorset name>, cannot be used for the read source

Explanation: When specifying a specific disk as a read source for a mirrorset, the disk specified must be a member of the mirrorset.

Choose a disk that's a member of the mirrorset and retry the command.

Error 3040: Cannot set read source to a specific device if mirrorset not configured as a unit

Explanation: Setting a mirrorset's read source to a specific device cannot be accomplished if the mirrorset is not configured as a unit.

Create a unit from the mirrorset and try the command again.

Error 3050: <disk name> could not be initialized as a spare disk

Explanation: When adding spare disks to the spareset, they are initialized with special spare disk metadata. If the metadata cannot be written, error 3050 results.

Error 3060: <disk name> is not a member of the spareset

Explanation: You attempted to delete a disk drive from the spareset that was not a member of the spareset.

Error 3070: <disk name> is not a member of the failedset

Explanation: You attempted to delete a disk drive from the failedset that was not a member of the failedset.

Error 3080: <setname> can't be deleted

Explanation: You attempted to delete the spareset or the failedset. These containers cannot be deleted.

Error 3090: <licensable feature> support is not enabled on this controller

Explanation: You attempted to use a feature that requires a license, and the license was not enabled on this controller.

Error 3100: <licensable feature> support is not enabled on other controller

Explanation: You attempted to use a feature that requires a license, and the license was not enabled on the other controller.

Error 3110: <disk name> is not a member of <container name>, cannot remove it

Explanation: When issuing a SET <container name> REMOVE=<disk name>, the disk specified was not part of the container.

Check the device and container names and reissue the command.

Error 3120: <container name> is already reduced. Another member cannot be removed

Explanation: When issuing a SET <container name> REMOVE=<disk name>, the container was already in a reduced state. Add another disk before removing another member.

Error 3130: Unable to remove <disk name> from <container name>

Explanation: When issuing a SET <container name> REMOVE=<disk name>, the controller was unable to remove the device from the RAIDset.

Check for error conditions, and if none exist, contact Digital Multivendor Customer Services.

Error 3140: <disk name> is in a spareset. Remove it from the spareset first.

Explanation: When issuing a SET <container name> REPLACE=<disk name>, the disk specified was part of the spareset. A disk to be used as a replacement must not be part of any configuration.

Error 3150: <disk name> is still part of a configuration. Delete upper configuration first.

Explanation: When issuing a SET <container name> REPLACE=<disk name>, the disk specified was part of an existing configuration. A disk to be used as a replacement must not be part of any configuration.

Error 3160: <disk name> is not a disk. Can only use disks for replacement in a raidset.

Explanation: When issuing a SET <container name> REPLACE=<disk name>, the device identified by <disk name> was not a disk.

Error 3170: <container name> is not reduced. Cannot replace a member

Explanation: When issuing a SET <container name> REPLACE=<disk name>, the container specified was not reduced.

Remove a member before replacing it.

Error 3180: <container name> has a replacement policy specified. Cannot manually replace a member.

Explanation: When issuing a SET <container name> REPLACE=<disk name>, it was discovered that the container specified already had a replacement policy specified. A manual replacement cannot be done on a container with an automatic replacement policy.

Set the replacement policy for the container to NOPOLICY and try the replacement again.

Error 3190: Unable to replace <disk name> in <container name>

Explanation: When issuing a SET <container name> REPLACE=<disk name>, the controller was unable to replace the device into the RAIDset.

Check for error conditions, and if none exist, contact Digital Multivendor Customer Services.

Error 3200: No other switches may be specified on a REMOVE operation.

Explanation: When issuing a SET <container name> REMOVE=<disk name>, no other switches (such as POLICY) may be specified.

Error 3210: No other switches may be specified on a REPLACE operation.

Explanation: When issuing a SET <container name> REPLACE=<disk name>, no other switches (such as POLICY) may be specified.

Error 3220: A REPLACE may not be done on a raidset or mirrorset that is not configured as a unit

Explanation: A REPLACE operation may not be done on a RAIDset or MIRRORset that has not been configured as a unit.

Error 3230: <container name> is reconstructing <disk name>. Only <disk name> may be removed

Explanation: When issuing a SET <container name> REMOVE=<disk name> on a RAIDset that is already reconstructing, only the disk drive that is being reconstructed may be removed.

Error 3240: <storageset type> may not be initialized

Explanation: Sparesets and failedsets cannot be initialized.

Check the name of the container that you wish to initialize and try again.

Error 3250: A REMOVE may not be done on a raidset or mirrorset that is not configured as a unit

Explanation: A RAIDset or MIRRORset must be configured as a unit before a disk may be removed.

Create a unit from the RAIDset or MIRRORset and then remove the member.

Error 3260: <disk name> is a TRANSPORTABLE disk. TRANSPORTABLE disks cannot be used by storagesets. Do a SET <disk name> NOTRANSPORTABLE before using this disk in a storageset

Explanation: You cannot place a TRANSPORTABLE disk into a reduced RAIDset.

Set the disk NOTRANSPORTABLE and retry the command.

Error 3270: <disk name> not in NORMAL state. Only NORMAL state units may be specified as a read source

Explanation: You may not specify a MIRRORset member as a read source unless it's in NORMAL state.

Either wait for the desired disk to enter NORMAL state or choose another disk in the MIRRORset that's already in NORMAL state.

Error 3280: Cannot determine if <disk name> is in the NORMAL state

Explanation: Unable to determine at this point in time if the disk specified is in normal state.

Retry the command. If this error persists, call Digital Multivendor Customer Services.

Error 3290: Mirrorsets are limited to 6 members maximum

Explanation: A MIRRORset may only have 6 disks as members. If you try to exceed this amount the above message is printed.

Error 3300: Currently there are <current count> members in this mirrorset. You must specify a membership greater than or equal to <current count>.

Explanation: YOu attempted to set the number of MIRRORset members to less than the actual number of disk drives that make up this MIRRORset.

Either specify a number greater than or equal to the number of phsical disk drives that make up this MIRRORset or remove one or more disk disk drives, then reduce the member count.

Error 3310: No other switches may be specified on a MEMBERSHIP operation

Explanation: When specifying the number of members in a MIRRORset, no other switches may be specified.

Retry the command only specifying the membership count.

Error 3320: Unable to change membership on mirrorset <mirrorset name>

Explanation: Unable to set the membership count on the specified MIRRORset at this point in time.

Retry the command. If this error persists, call Digital Multivendor Customer Services.

Error 3330: Can only MIRROR disks. <disk name> is not a disk

Explanation: Only disks may be MIRRORed. If you specify a device other than a disk drive, the above error is printed.

Try the command again specifying a disk drive.

Error 3340: Can only UNMIRROR disks. <disk name> is not a disk

Explanation: Only disks may be unMIRRORed. If you specify a device other than a disk drive, the above error is printed.

Try the command again specifying a disk drive.

Error 3350 <disk name> must be configured under a mirrorset to UNMIRROR

Explanation: Only disk drives that are configured under mirrorsets may be unMIRRORed.

Specify a disk that is configured under a MIRRORset.

Error 3360: To UNMIRROR a disk, the mirrorset must contain only one member, the disk to be UNMIRROR. Mirrorset <mirrorset name> contains more than one member

Explanation: To unmirror a disk drive, only one disk may be a member of the MIRRORset.

REMOVE all disk drives but one and retry the command.

Error 3370: A MIRROR may not be done on a disk that is not configured as a unit

Explanation: To MIRROR a disk drive either it or the storageset that it belongs to must be configured as a unit.

Configure the disk drive or the storageset that it belongs to as a unit and retry the command.

Error 3380: An UNMIRROR may not be done on a disk that is not configured as a unit

Explanation: To UNMIRROR a disk drive either it or the storageset that it belongs to must be configured as a unit.

Configure the disk drive or the storageset that it belongs to as a unit and retry the command.

Error 3390: REDUCE of specified disks failed

Explanation: The requested REDUCE did not complete successfully.

Check the configuration to assure that it was not partially completed (some disks removed from the specified MIRRORset(s); if so, reconfigure and wait for all disks to return to the NORMAL state. If this error persists, call Digital Multivendor Customer Services.

Error 3400: <device name> is not a disk. Can only REDUCE disks

Explanation: Only disk drives may be specified on the REDUCE command.

Retry the command only specifying disks.

Error 3410: <disk name> was specified twice in the REDUCE command

Explanation: The disk drive name called out was specified twice in the REDUCE command line.

Retry the command with only specifying disk names once.

Error 3420: <disk name> is not part of the same unit as previous disks specified

Explanation: All disks specified on the REDUCE command must be used by one common unit. If the disks specified are in use by more than one unit, the above message is printed.

Retry the command specifying disks that all have one common unit as a parent.

Error 3430: A REDUCE may not be done on disks not configured as a unit

Explanation: A REDUCE command is only valid when the storageset is configured as a unit.

Configure the top most storageset as a unit and retry the command.

Error 3440: <disk name> is not a member of a mirrorset

Explanation: The disk drive specifed is not a member of a MIRRORset.

Retry the command only specifying disks that are members of MIRRORsets.

Error 3450: No NORMAL or NORMALIZING members would be left in MIRRORSET <mirrorset name>

Explanation: When reducing, at least one member that is in the NORMAL state must remain in each MIRRORset. This error results when the MIRRORset called out would not be left with at least one NORMAL member.

Make sure at least on NORMAL member will remain in each MIRRORset specified and retry the command.

Error 3460: !AC cannot be mirrored due to bad cache on <controller> controller

Explanation: In order to mirror a disk drive the writeback cache must be correctly operating on this, or if in a dual-redundant controller, both controllers. If it's not, the above error results.

Repair the cache on the problem controller(s) and retry the command.

Error 3470: Only 20 mirrorsets and raidsets total can be supported on a controller. This storageset not added.

Explanation: The total number of RAIDsets and MIRRORsets supported on the controller is 20; this error will result if you attempt to add an 21st MIRROR or RAIDset.

Delete unused RAID and MIRRORsets and retry the command.

Error 3480: Only 30 stripesets, mirrorsets and raidsets total can be supported on a controller. This storageset not added.

Explanation: The total number of RAIDsets, MIRRORsets and STRIPEsets supported on the controller is 30; this error will result if you attempt to add an 21st MIRROR, STRIPE or RAIDset.

Delete unused RAID, STRIPE and MIRRORsets and retry the command.

Error 4000: The CLI prompt must have 1 to 16 characters.

Explanation: This error results from a SET THIS_CONTROLLER or SET OTHER_CONTROLLER command with the qualifier PROMPT=. The length of the CLI prompt must be at least one character and may not exceed 16 characters.

Retry the command with the correct number of characters.

Error 4010: Illegal character in CLI prompt.

Explanation: A nonprintable character was specified. Only ASCII characters space ‘‘ ’’ through tilde ‘‘~’’ may be specified (hex 20–7E).

Error 4020: Terminal speed must be 300, 1200, 2400, 4800, 9600 or 19200

Explanation: This error results from a SET THIS_CONTROLLER or SET OTHER_CONTROLLER command with the argument TERMINAL_SPEED=. The only valid baud rates that may be specified are 300, 1200, 2400, 4800, 9600 or 19200 baud.

Retry the command with a correct terminal speed.

Error 4030: Controller ID must be in the range 0 to <max nodes minus 1>.

Explanation: The ID= was specified with a number greater than <max nodes minus 1>.

If increasing the controller’s ID, set MAX_NODES first, then the controller’s ID.

Error 4040: SCS nodename length must be from 1 to 6 characters.

Explanation: This error results from a SET THIS_CONTROLLER or SET OTHER_CONTROLLER command with the argument SCS_NODENAME=. The SCS node name must consist of one to six alphanumeric characters enclosed in quotes with an alphabetic character first.

Retry the command with a correct SCS node name length.

Error 4050: SCS nodename must start with an alpha character and contain only A-Z and 0-9

Explanation: This error results from a SET THIS_CONTROLLER or SET OTHER_CONTROLLER command with the argument SCS_NODENAME=. The SCS node name must consist of alphanumeric characters enclosed in quotes with an alphabetic character first.

Retry the command with a correct SCS node name.

Error 4060: Allocation class must be from <minimum> to 255

Explanation: An illegal MSCP or TMSCP allocation class was specified. The <minimum> is 0 for a single controller configuration, or 1 for a dual-redundant configuration.

Error 4070: Max nodes must be 2, 8, 16 or 32

Explanation: This error results from a SET THIS_CONTROLLER or SET OTHER_CONTROLLER command with the argument MAX_NODES=. Max nodes must be 2, 8, 16 or 32 nodes.

Retry the command with a correct max node number.

Error 4080: Current node ID too large for requested max nodes setting.

Explanation: This error results from a SET THIS_CONTROLLER or SET OTHER_CONTROLLER command with the arguments MAX_NODES= or ID=. MAX_NODES= was specified with a number less than the controller’s ID or the controller’s ID was specified with a number greater than MAX_NODES—1.

If decreasing MAX_NODES, set the controller’s ID first, then MAX_NODES.

Error 4090: Module has invalid serial number. This controller cannot be used Call field service

Explanation: This error is typically the result of faulty Non-Volatile memory. This error cannot be fixed in the field.

A replacement controller must be orderd. Contact Digital Multivendor Customer Services.

Error 4100: Unable to RESTART other controller.

Explanation: A communication error occurred when trying to restart the other controller.

Retry the RESTART command.

Error 4110: Unable to SHUTDOWN other controller.

Explanation: A communication error occurred when trying to shutdown the other controller.

Retry the SHUTDOWN command.

Error 4120: Unable to SELFTEST other controller.

Explanation: A communication error occurred when trying to self-test the other controller.

Retry the SELFTEST command.

Error 4130: Unable to setup controller restart.

Explanation: A communication error occurred when trying to restart or self-test the other controller.

Retry the RESTART or SELFTEST command.

Error 4140: Unable to lock the other controller's NV memory

Explanation: Most configuration commands such as ADD, DELETE, and SET require both controllers in a dual-redundant configuration to be running so configuration changes can be recorded in both controllers. If one controller is not running, the above message results when you attempt to change the configuration.

Restart the other controller and try the command again, or SET NOFAILOVER on the remaining controller.

Error 4150: Unable to rundown the following units on the other controller: <list of problem units>

Explanation: When attempting to shut-down, restart or selftest the other controller, some units could not be successfully run down. This can be caused either by online units or errors when trying to rundown the units. Either rectify the problems on the problem units or issue the SHUTDOWN, RESTART or SELFTEST command with the OVERRIDE_ONLINE or IGNORE_ERRORS qualifiers.

Error 4160: Unable to rundown the following units on this controller: <list of problem units>

Explanation: When attempting to SHUTDOWN, RESTART or SELFTEST this controller, some units could not be successfully run down. This can be caused either by online units or errors when trying to rundown the units.

Either rectify the problems on the problem units or issue the SHUTDOWN, RESTART or SELFTEST command with the qualifier OVERRIDE_ONLINE or IGNORE_ERRORS.

Error 4170: Only <max targets> targets may be specified

Explanation: When setting THIS_CONTROLLER or OTHER_ CONTROLLER ID=, you specified too many IDs; you can only specify up to <max targets> IDs.

Retry the SET THIS_CONTROLLER ID= command with no more than <max targets> IDs specified.

Error 4180: Invalid unit number(s) still present that must be deleted before the controller ID may be changed. All unit numbers must be in the range(s): <start> to <end>

Explanation: You attempted to change the controller IDs when there were still units using those IDs. The current valid unit ranges are given by the <start> and <end> values.

Either delete the units that use the ID that will no longer be specified, or Retry the SET THIS_CONTROLLER ID= specifying the ID being used by the existing units.

Error 4190: The time must be specified in the format dd-mmm-yyyy:hh:mm:ss

Explanation: On the HSZ controllers only, the time must be specified as shown.

Retry the command using the correct time format.

Error 4200: CACHE_FLUSH_TIMER must be in the range 1 to 65535

Explanation: The value given for the CACHE_FLUSH_TIMER is out of range.

Reissue the command specifying a number in the range shown.

Error 4210: Only targets defined by the ID= command may be specified on the/ PREFERRED_ID= qualifier

Explanation: HSZ only. The PREFERRED_IDs specified must be a subset of the IDs (targets) supported by the controller. When changing either the supported targets or the preferred ids, it was found that the PREFERRED_ IDs were not a subset of the IDs.

Reissue the command with valid PREFERRED_ID= arguments or change the IDs supported by the controller.

Error 5000: A program name must be from 1 to 6 characters in length

Explanation: This error results from a ''RUN <program name>.''

Error 5010: The requested program is currently busy.

Explanation: This error results from a ''RUN <program name>.'' The program requested is being run by someone else.

Error 5020: The requested program is unknown.

Explanation: This error results from a ''RUN <program name>.''

Enter ''DIR'' to get a list of available programs.

Error 5030: Insufficient memory for request.

Explanation: This error results from a ''RUN <program name>'' resource problem. Retry the command later.

Error 6000: Communication failure with the other controller.

Explanation: There was a communication problem with the other controller. This typically happens if the other controller is shutting down. If these messages happen often when the other controller is not shutting down, call Digital Multivendor Customer Services.

Error 6010: Other controller not present

Explanation: When asked to communicate with another controller (the result of any one of a number of commands), the other controller was found not to be running.

If the other controller is in the process of restarting, retry the command later. If the other controller is shut down or turned off, start it. If the other controller is no longer present, enter a SET NOFAILOVER command to take it out of dual-redundant mode.

Error 6020: Initial failover handshake not yet complete

Explanation: For a short period of time after start up, the two controllers must communicate to set up a dual-redundant mode. This setup time is typically less than 1 minute. If commands that require controller-to-controller communication are entered during this setup time, error 6020 results.

Retry the command later.

Error 6030: Unable to communicate with the other controller to setup FAILOVER

Explanation: Could not setup FAILOVER due to communication problems between the controllers.

Retry the command later.

Error 6040: The write of the other controller's configuration information did not succeed; information may be in an inconsistent state. Before further use both controllers should be removed from dual-redundant mode (SET NOFAILOVER) and then placed back into dual-redundant mode (SET FAILOVER) to assure consistency

Explanation: Communication was lost in the middle of a SET FAILOVER command.

Follow the instructions included in the error message.

Error 6050: Communication failure with other controller while putting controllers into dual-redundant mode. Reissue SET FAILOVER command

Explanation: Communication was lost in the middle of a SET FAILOVER command.

Follow the instructions included in the error message.

Error 6070: Illegal command—this controller not configured for dual-redundancy

Explanation: A command was entered to a single controller configuration that requires two controllers to be in dual-redundant mode.

If two controllers are supposed to be in dual-redundant mode, enter a SET FAILOVER command. If not, do not enter the command that resulted in the error.

Error 6080: Illegal command—this controller not currently in dual-redundant mode

Explanation: A command was entered to a dual-redundant-configured controller, but the other controller was not available for communication.

Restart the other controller and wait until it is communicating with this controller. If this controller is no longer supposed to be in dual-redundant mode, enter a SET NOFAILOVER command (the other controller will shutdown when the SET NOFAILOVER command is issued).

Error 6090: In failover no device may be configured at target 6 <device type> <device name> is at PTL <port> <target> <lun>

Explanation: Target addresses 6 and 7 are used by the controllers when in a dual-redundant configuration. When in a single controller configuration, target 6 is available for use by devices. If devices are configured at target 6 and you attempt to install a dual-redundant configuration, this error is displayed for all devices that use target 6 and the controllers will not be placed in a dual-redundant configuration.

Reconfigure the drives both logically and physically so that target 6 is not used.

Error 6100: Allocation classes cannot be zero for a dual-redundant configuration. Set MSCP and TMSCP allocation classes to non-zero.

Explanation: If in a dual-redundant configuration, the allocation class must not be set to zero.

Error 6110: This controller already configured for failover, SET NOFAILOVER first.

Explanation: A SET FAILOVER cannot be issued on a controller already in failover.

Error 6120: The other controller already configured for failover, SET NOFAILOVER first.

Explanation: A SET FAILOVER cannot be issued on a controller already in failover.

Error 6130: RAID5 in use on this controller but not enabled on the other controller.

Explanation: When trying to SET FAILOVER, it was discovered that there were RAID5 configurations on this controller but the other controller did not have the RAID5 feature enabled.

If RAID5 is licensed on the other controller, enable it. If it is not licensed, either contact Digital Multivendor Customer Services for licensing information, or do not use the two controllers in dual-redundant mode, or do not use a RAID5 configuration.

Error 6140: Writeback cache in use on this controller but not enabled on the other controller.

Explanation: When trying to SET FAILOVER, it was discovered that there were write-back cache switches set on this controller but the other controller did not have the write-back cache feature enabled.

If write-back cache is licensed on the other controller, enable it. If it is not licensed, either contact Digital Multivendor Customer Services for licensing information, or do not use the two controllers in dual-redundant mode, or do not use the write-back cache switches.

Error 6150: RAID5 in use on other controller but not enabled on this controller

Explanation: When trying to SET FAILOVER, it was discovered that there were RAID5 configurations on the other controller but this controller did not have the RAID5 feature enabled.

If RAID5 is licensed on this controller, enable it. If it is not licensed, contact Digital Multivendor Customer Services for licensing information or do not use the two controllers in dual-redundant mode, or do not use a RAID5 configuration.

Error 6160: Writeback cache in use on other controller but not enabled on this controller.

Explanation: When trying to SET FAILOVER, it was discovered that there were write-back cache switches set on the other controller but this controller did not have the write-back cache feature enabled.

If write-back cache is licensed on this controller, enable it. If it is not licensed, either contact Digital Multivendor Customer Services for licensing information or do not use the two controllers in dual-redundant mode, or do not use the write-back cache switches.

Error 6170: An <controller type> and <controller type> cannot configured for failover

Explanation: Two different controllers (such as an HSJ and an HSZ) cannot be configured for failover.

Replace the other controller with the same model as this one and reissue the command.

Error 6180: MIRRORING in use on this controller but not enabled on the other controller

Explanation: When trying to SET FAILOVER, it was discovered that there were MIRRORsets on this controller but the other controller did not have the MIRROR feature enabled.

If MIRROR is licensed on the other controller, enable it. If it is not licensed, either contact Digital Multivendor Customer Services for licensing information, or do not use the two controllers in dual-redundant mode, or do not use a MIRRORset configuration.

Error 6190: MIRRORING in use on the other controller but not enabled on this controller

Explanation: When trying to SET FAILOVER, it was discovered that there were MIRRORsets on the other controller but this controller did not have the MIRROR feature enabled.

If MIRROR is licensed on this controller, enable it. If it is not licensed, contact Digital Multivendor Customer Services for licensing information or do not use the two controllers in dual-redundant mode, or do not use a MIRRORset configuration.

Error 7000: Can only clear LOST_DATA cache errors on a unit.

Explanation: you specified something other than a unit for clearing the LOST_DATA cache error.

Error 7010: Can only clear UNWRITEABLE_DATA cache errors on a unit.

Explanation: You specified something other than a unit for clearing the UNWRITEABLE_DATA cache error.

Error 7020: Can only retry UNWRITEABLE_DATA cache errors on a unit

Explanation: You specified something other than a unit for retrying a write on a UNWRITEABLE_DATA cache error.

Error 7030: Unable to force write of unwriteable data

Explanation: A RETRY UNWRITEABLE_DATA command could not write the UNWRITEABLE_DATA.

Error 7040: Unable to rundown unit before clearing error

Explanation: To clear UNWRITEABLE_DATA and LOST_DATA errors, the unit must be rundown before the error is cleared. If the unit could not be rundown, the above error results. If this error persists, call Digital Multivendor Customer Services.

Error 7050: Unable to runup unit after clearing error. This controller must be restarted

Explanation: To clear UNWRITEABLE_DATA and LOST_DATA errors, the unit must be rundown before the error is cleared. If the unit was rundown and the error was cleared and then the unit was unable to be run back up, the unit will remain unavailable until the controller is restarted.

Error 7060: Cannot clear LOST_DATA on a unit without LOST_DATA

Explanation: If a unit does not have a LOST_DATA error, a CLEAR LOST_DATA <unit number> is an illegal command.

Check to assure the unit that you wished to CLEAR LOST_DATA on does exhibit a LOST_DATA error.

Error 7070: Cannot clear UNWRITEABLE_DATA on a unit without UNWRITEABLE_DATA

Explanation: If a unit does not have a UNWRITEABLE_DATA error, a CLEAR UNWRITEABLE_DATA <unit number> is an illegal command.

Check to assure the unit that you wished to CLEAR UNWRITEABLE_DATA on does exhibit an UNWRITEABLE_DATA error.

Error 7080: Cannot retry UNWRITEABLE_DATA on a unit without UNWRITEABLE_DATA

Explanation: If a unit does not have a UNWRITEABLE_DATA error, a RETRY UNWRITEABLE_DATA <unit number> is an illegal command.

Check to assure the unit that you wished to RETRY UNWRITEABLE_DATA on does exhibit a UNWRITEABLE_DATA error.

Error 9000: Cannot rename a unit

Explanation: Only devices and storagesets may be renamed. If you attempt to rename a unit, the above message results.

Error 9010: <name> is an illegal name, it must be from 1 to 9 characters.

Explanation: This error results from an ADD command with an illegal name given.

Error 9020: <name> is an illegal name, it must start with A-Z

Explanation: This error results from an ADD command with an illegal name given.

Error 9030: <name> is an illegal name, characters may consist only of A-Z, 0-9, ., - or _

Explanation: This error results from an ADD command with an illegal name given.

Error 9040: <name> conflicts with keyword <keyword>

Explanation: The name given in an ADD command conflicts with a CLI keyword.

Specify another name.

Error 9050: Configuration area full

Explanation: The total number of units, devices, and storagesets that can be configured is 195 in any combination. This error results when you exceed that number of nodes.

Delete some units or devices in order to recover some configuration nodes.

Error 9060: <name> does not exist

Explanation: Some operation (SET, DELETE, INITIALIZE, and so forth) specified a name that does not exist.

Check the name and retry the command.

Error 9070: <name> is part of a configuration

Explanation: Devices may not be deleted if they are still in use by storagesets or units. Storagesets may not be deleted if they are still used by units.

Delete configurations from the top down; delete units, then stripesets, and RAIDsets (if any), and then finally devices.

Error 9080: <name> is already used

Explanation: An ADD command specified a name that is already in use.

Specify another name.

Note

This error is commonly the result of failing to name a storageset. For example, when trying to create a stripeset out of three disks the user may type:

```
ADD STRIPESET DISK100 DISK200 DISK300
```

This will result in a 9080 error since the controller attempted to create a stripeset named "DISK100" (since the user forgot to name the stripeset), which of course is a name already used by a disk drive.

Error 9090: A <device type> cannot be used in a <storageset type>

Explanation: The device specified cannot be used in the storageset specified, for example, tapes cannot be bound into a stripeset.

Reexamine the configuration and correct the incompatibility.

Error 9100: A <storageset type> must have from <minimum> to <maximum> entities

Explanation: The wrong number of devices was specified for this storageset. Different storagesets require different numbers of devices.

Reexamine the configuration, then correct the number of devices.

Error 9130: Cannot delete ONLINE unit

Explanation: Unit specified in a DELETE command is online to a host.

Dismount the unit at the host then retry the command. Or add the OVERRIDE_ONLINE qualifier to the DELETE command.

Error 9140: Cannot delete exclusive access unit

Explanation: Unit specified in a DELETE command is set up for exclusive access.

Take the unit out of exclusive access mode and retry the command.

Error 9150: INITIALIZE is no longer supported at the unit level. You must INITIALIZE the container that makes up this unit

Explanation: You tried to initialize a unit. Units may no longer be initialized. The container that makes up the unit must be initialized before a unit is created out of the container.

Error 9160: Non-disk devices cannot be INITIALIZED

Explanation: Tapes and CDROMS may not be initialized.

Error 9170: <device type> <device name> at PTL <port> <target> <lun> No device installed

Explanation: When a unit is added or initialized, the configuration of the devices that makes up the unit is checked. If no device is found at the PTL specified, this error is displayed.

Check both the logical and physical configuration of the unit and correct any mismatches.

Error 9180: <device type> <device name> at PTL <port> <target> <lun> Incorrect device type installed

Explanation: When a unit is added or initialized, the configuration of the devices that make up the unit is checked. If a non disk device is found at the PTL specified, this error is displayed.

Check both the logical and physical configuration of the unit and correct any mismatches.

Error 9190: Unit <unum> is currently online

Explanation: When a SHUTDOWN, RESTART, or SELFTEST command is entered without the OVERRIDE_ONLINE qualifier and online devices are found, the command is aborted and the units currently online are listed.

Either retry the command with OVERRIDE_ONLINE qualifier or dismount all devices from the hosts.

Error 9200: <name> conflicts with unit names

Explanation: This error results from an ADD command. Names in the format of D*n* and T*n,* when *n* is a number from 0 to 4094, are reserved for units. Rename the storageset or device that is being added so it does not conflict with the unit names and retry the command.

Error 9210: Cannot check if drives are online to the other controller

Explanation: When trying to check for online drives on the other controller, there was a communication failure.

Retry the command.

Error 9220: You cannot specify NOREAD_CACHE while in WRITEBACK_ CACHE mode

Explanation: WRITEBACK_CACHE is specified for this unit. READ_ CACHE cannot be specified while WRITEBACK_CACAHE is set.

Reissue the SET command disabling both WRITEBACK_CACHE and READ_ CACHE.

Error 9230: Unable to modify switches requested

Explanation: This error results from a SET command. The system is currently busy.

Retry the SET command later.

Error 9240: Cannot delete unit in maintenance mode

Explanation: When trying to delete a unit, the unit was found to be in maintenance mode. This is typically the result of trying to delete a unit that is in use by DILX or TILX.

Ensure that DILX and TILX is not being run against the unit that is to be deleted, and retry the command.

Error 9250: Initialize of disk failed

Explanation: Unable to write metadata on disk.

Make sure the disk is not broken.

Error 9260: Cannot INITIALIZE a container that is still part of a configuration. Delete upper configuration first

Explanation: A container cannot be initialized that is part of another configuration or is being used by a unit.

Delete the upper configuration and reissue the INITIALIZE command.

Error 9270: Illegal command—this controller not configured for failover, but other controller present. Stop one controller or SET FAILOVER to put both in failover mode

Explanation: You may not change a non-dual-redundant controller's configuration if the other controller is running.

Stop the other controller (pop out the program card, for example) and retry the command.

Error 9280: Cannot rename the SPARESET or FAILEDSET

Explanation: The SPARESET and FAILEDSET cannot be renamed.

Error 9290: Communication failure with other controller, cannot check other controller's licensing

Explanation: Unable to communicate with the other controller to check licensing before creating a RAIDset or enabling write-back cache.

Check to make sure that both controllers are running. If one is broken, take this controller out of failover (SET NOFAILOVER) and reissue the command.

Warning 9300: Bad write cache or battery on <controller> controller

Explanation: When trying to set failover, it was discovered that one conrtoller's cache had failed. For this reason the ability to place the controller's in a dual redundant mode has been blocked.

Repair the cache and retry the command.

Error 9310: Container metadata check failed, unit not created. <reason for failure>

Explanation: You attempted to create a unit from a container that did not have valid metadata.

INITIALIZE the metadata on the container, then create a unit out if it.

Error 9330: NV memory write collision. Please try again

Explanation: Two processes were trying to modify the controller's configuration at the same time.

Check the configuration you were trying to modify to make sure it's unchanged and retry the command.

Error 9340: Reduced raidsets cannot be INITIALIZED

Explanation: You cannot INITIALIZE a RAIDset that is running in reduced state.

Replace a member and try again.

Error 9350: Cannot create storageset because this would create more than 32 devices served by one unit

Explanation: Only 32 devices can be supported by one unit. Reduce the number of devices and reissue the command.

Error 9360: A tape is not installed at the PTL <port> <target> <lun>. Cannot set tape switches unless a tape is installed

Explanation: A SET or ADD command specified a tape format, but there was no tape installed at the tape's PTL.

Install a tape and retry the command.

Error 9370: A <tape name> is an unsupported device. Tape switches cannot be set on unsupported devices

Explanation: The tape installed is not currently supported by the controller.

Replace the tape with a supported device and retry the command.

Error 9380: Unable to allocate unit for NORUN to RUN transition

Explanation: The unit could not be allocated so the controller could do a RUN/NORUN transition.

Retry the command. If this error persists, call Digital Multivendor Customer Services.

Error 9390: Cannot change default tape format while tape drive online to host

Explanation: The default tape format cannot be changed when the tape drive is online to a host.

Dismount the tape drive from the host and retry the command.

Error 9400: Cannot rundown or allocate unit in order to delete it

Explanation: Retry the command. If this error persists, call Digital Multivendor Customer Services.

Error 9410: Cannot delete unit—<type> error exists on unit that must be cleared first. To clear error type: <clear error string>

Explanation: Units cannot be deleted if cache errors exist. Any cache errors must be cleared before a unit can be deleted.

Issue the <clear error string> command and then delete the unit.

Error 9420: Unit <unit number> has unflushed data or a cache error and must be deleted on this controller

Explanation: When trying to set failover a unit with unflushed data or a cache error was detected on this controller.

Delete the unit as requested and then retry the SET FAILOVER command.

Error 9430: Cannot check if drives have unflushed data or cache errors on the other controller

Explanation: Communication error when trying to SET FAILOVER.

Retry the command. If this error persists, call Digital Multivendor Customer Services.

Error 9440: Unit <unit number> has unflushed data or a cache error and must be deleted on the other controller

Explanation: When trying to set failover a unit with unflushed data or a cache error was detected on the other controller.

Delete the unit as requested and then retry the SET FAILOVER command.

Error 9450: Cannot mirror <disk name>

Explanation: Error when attempting to mirror a disk drive.

Check the configuration to assure it's the same as before. If so, retry the command. If this error persists, call Digital Multivendor Customer Services.

Error 9460: Cannot increae the numebr of members because this would create more than 32 devices served by one unit

Explanation: Only 32 devices can be supported by one unit. Reduce the number of devices and reissue the command.

B.2.3 Warning Conventions

A Warning *nnnn:* message means that the command completed, but there is a situation that you should be aware of. Typically, but not always, a warning will result in an unusable configuration; you will have to either logically reconfigure the cabinet using the CLI or physically reconfigure the cabinet by moving the disks around.

Multiple warning messages may result from one command.

Items in angle brackets (<>) are replaced at run time with names, numbers, and so on.

B.2.4 CLI Warning Messages

Warning 1000: It is recommended that you read the controller product documentation to understand the significance of enabling WRITEBACK_ CACHE particularly for RAID Arrays

Explanation: Using write-back cache introduces behaviors that you should completely understand before using. See the full documentation on write-back cache in the user guide.

Warning 3000: This storageset is configured with more than one disk per port. This causes a degradation in performance

Explanation: This warning results from an ADD *storageset-type* command. The storageset specified has more than one member per port. One method of increasing the controller's performance is through parallel transfers to members of a storageset. If multiple members of a storageset are on one port, transfers must be done in serial to those members.

Though multiple storageset members on one port will work, it is strongly recommended that the storageset be deleted and reconfigured with one member per port.

Warning 3020: <storageset name> is configured with different sized containers. This will result in a storageset of reduced size

Explanation: This warning results from an ADD *storageset-type* command. Storageset size is determined by the size of the smallest device, so the storageset configured will be of reduced size.

If a reduced size storageset is acceptable, nothing needs to be done in response to the above warning. To realize the maximum storageset size, the size of all devices that make up the storageset should be identical.

Warning 3030: Cannot determine state of disk <disk name>in mirrorset <mirrorset name>

Explanation: Before disk drives are removed from a MIRRORset, the MIRRORset is checked to assure that at least one NORMAL member will be left after the REMOVE or REDUCE. If the state of a disk cannot be determined, the above message is printed.

Warning 3040: <storageset name> will be disabled due to bad cache state on <controller> controller

Explanation: If the cache is in a state on this or the other controller such that the storageset cannot be used, it will be created but the above message will be printed so the user knows that the storageset wil be disabled.

Warning 4000: A restart of this controller is required before all the parameters modified will take effect

Explanation: This warning results from a SET THIS_CONTROLLER command. Some controller parameters require a restart before they can take effect. If any of those parameters are changed, this warning is displayed.

It is recommended that a restart via the ''RESTART THIS_CONTROLLER'' command be done as soon as possible.

Warning 4010: A restart of the other controller is required before all the parameters modified will take effect

Explanation: This warning results from a SET OTHER_CONTROLLER command. Some controller parameters require a restart before they can take effect. If any of those parameters are changed, this warning is displayed.

Restart the controller and retry the command.

Warning 4020: A restart of both this and the other controller is required before all the parameters modified will take effect

Explanation: This warning results from a SET THIS_CONTROLLER or a SET OTHER_CONTROLLER command. Some controller parameters require a restart of both controllers before they can take effect. If any of those parameters are changed, this warning is displayed. Restart both controllers and retry the command.

Warning 6000: Communication failure with the other controller while taking controllers out of dual-redundant mode. Issue a SET NOFAILOVER command on the other controller

Explanation: This warning results from a SET NOFAILOVER command. This controller was unable to communicate with the other controller to notify it that it is no longer in dual-redundant mode. Typically, this occurs when the other controller has already been removed prior to the SET NOFAILOVER command.

Enter a SET NOFAILOVER command on the other controller as soon as possible.

Warning 6010: Licensing different between the two controllers

Explanation: If the licensing is not identical on both controllers in a dual-redundant configuration, the above warning is displayed.

You should check the licensing on both controllers and make sure they are identical.

Warning 6020: Bad write cache or battery on <controller or controllers> controller

Explanation: <Controller or Controllers> can be THIS_CONTROLLER, OTHER_CONTROLLER, or both controllers. Your write-back cache module or its batteries are bad.

Warning 7000: Data written successfully before clearing unwriteable data error

Explanation: As a result of a CLEAR UNWRITEABLE_DATA, if the last-ditch attempt to write data before clearing the error was successful, the above warning is displayed.

Note

This means that no customer data was lost, so this warning is actually good.

Warning 7010: Unable to clear LOST_DATA on other controller

Explanation: When trying to clear LOST_DATA on the other controller, a communication error occurred.

Retry the command. If the failure persists, contact Digital Multivendor Customer Services.

Warning 7020: Unable to clear UNWRITEABLE_DATA on other controller

Explanation: When trying to clear UNWRITEABLE_DATA on the other controller, a communication error occurred.

Retry the command. If the failure persists, contact Digital Multivendor Customer Services.

Warning 9000: Drive has LOST_DATA

Explanation: During a check of the drive's metadata, it was detected that the drive had lost data.

Clear the lost data error on the drive.

Warning 9030: Cannot determine if the correct device type is at the PTL specified

Explanation: When a device is added, the location specified is checked to see if the correct device type is present. This warning results when no device responds from the location specified.

Check the physical configuration and the PTL that was specified.

Warning 9040: There is currently a <device type> at the PTL specified

Explanation: When a device is added, the location specified is checked to see if the correct device type is present. This warning results when a device different from the one specified is found at the location specified (for example, a tape is found where a disk was added).

Check the physical configuration and the PTL that was specified.

Warning 9050: <device type> <device name> at PTL <port> <target> <lun> No device installed

Explanation: When a unit is added, the configuration of the disks that make up the unit is checked. If no device is found at the PTL specified, this warning is displayed.

Check both the logical and physical configuration of the devices that make up the unit and correct any mismatches.

Warning 9060: <device type> <device name> at PTL <port> <target> <lun> Incorrect device type installed

Explanation: When a unit is added, the configuration of the disks that make up the unit is checked. If a non disk device is found at the PTL specified, this warning is displayed.

Check both the logical and physical configuration of the devices that make up the unit and correct any mismatches.

Warning 9080: <license> support is not licensed on <controller> controller. Any use of this feature requires licensing. Continued use does not comply with the terms and conditions of licensing for this product.

Explanation: You have a licensed feature enabled on this controller but it is not licensed. This is against the contractual agreement between Digital and your company. Please disable the licensed feature and contact Digital Multivendor Customer Services if you wish to purchase it.

Warning 9090: Metadata found on container. Are you sure this is a TRANSPORTABLE container?

Explanation: When a transportable disk was initialized, metadata was found.

Verify that this disk in fact should be marked transportable. No action is required to correct this warning.

Warning 9100: Bad or low battery or bad write cache on <controller> writeback cache will not be used

Explanation: The battery is low or bad on the specified controller. The unit specified will not use write-back cache until the battery is charged or repaired.

Warning 9110: Bad or low battery or bad write cache on <controller> this unit cannot be used by <controller>

Explanation: The battery is low or bad on the specified controller. The unit specified requires the use of write-back cache, so its use has been disabled until the battery is charged or repaired.

B.3 Device Configuration Examples

The following examples cover the majority of configurations and the method of defining those configurations.

Example B–1 Initial Single Controller Configuration of an HSD30 Controller

```
CLI> SET THIS_CONTROLLER ID=5 SCS_NODENAME="HSD03"
CLI> SET THIS_CONTROLLER MSCP_ALLOCATION_CLASS=4 TMSCP_ALLOCATION_CLASS=4
CLI> RESTART THIS_CONTROLLER
[this controller restarts at this point]
CLI> SET THIS_CONTROLLER PATH
```

Example B–2 Initial Dual-Redundant Controller Configuration of an HSJ Controller

```
CLI> SET THIS_CONTROLLER MAX_NODES=16
CLI> SET THIS_CONTROLLER ID=5 SCS_NODENAME="HSJ01"
CLI> SET THIS_CONTROLLER MSCP_ALLOCATION_CLASS=4 TMSCP_ALLOCATION_CLASS=4
CLI> SET FAILOVER COPY=THIS
CLI> SET OTHER_CONTROLLER MAX_NODES=16
CLI> SET OTHER_CONTROLLER ID=7 SCS_NODENAME="HSJ02"
CLI> RESTART OTHER_CONTROLLER
[other controller restarts at this point]
CLI> RESTART THIS_CONTROLLER
[this controller restarts at this point]
CLI> SET THIS_CONTROLLER PATH_A PATH_B
CLI> SET OTHER_CONTROLLER PATH_A PATH_B
```

Example B–3 Initial Single Controller Configuration of an HSZ Controller

```
CLI> SET THIS_CONTROLLER ID=5
CLI> RESTART THIS_CONTROLLER
[this controller restarts at this point]
```

Example B–4 Setting the Terminal Speed and Parity

```
CLI> SET THIS_CONTROLLER TERMINAL_SPEED=19200 NOTERMINAL_PARITY
```

Note

Garbage will appear on the terminal after setting the controller's terminal speed until you set the terminal's speed to match the controller's new terminal speed.

Example B–5 Creating a Unit from a Disk Device

```
CLI> ADD DISK DISK0 2 0 0
CLI> INITIALIZE DISK0
CLI> ADD UNIT D0 DISK0
```

Example B–6 Creating a Unit from a Tape Device

```
CLI> ADD TAPE TAPE0 3 0 0
CLI> ADD UNIT T0 TAPE0
```

Example B–7 Creating a Unit from a Four-Member Stripeset

```
CLI> ADD DISK DISK0 1 0 0
CLI> ADD DISK DISK1 2 0 0
CLI> ADD DISK DISK2 3 0 0
CLI> ADD DISK DISK3 1 1 0
CLI> ADD STRIPESET STRIPE0 DISK0 DISK1 DISK2 DISK3
Warning 3000: This storageset is configured with more than one disk per port.
              This causes a degradation in performance
CLI> INITIALIZE STRIPE0
CLI> ADD UNIT D0 STRIPE0
```

Example B–8 Creating a Unit from a Five-Member RAIDset

```
CLI> ADD DISK DISK0 1 0 0
CLI> ADD DISK DISK1 2 0 0
CLI> ADD DISK DISK2 3 0 0
CLI> ADD DISK DISK3 1 1 0
CLI> ADD DISK DISK4 2 1 0
CLI> ADD RAIDSET RAID9 DISK0 DISK1 DISK2 DISK3 DISK4
Warning 3000: This storageset is configured with more than one disk per port.
              This causes a degradation in performance
CLI> INITIALIZE RAID9
CLI> ADD UNIT D0 RAID9
```

Example B–9 Creating a Unit from a Disk Device and Setting the Write Protection

```
CLI> ADD DISK DISK0 2 0 0
CLI> INITIALIZE DISK0
CLI> ADD UNIT D0 DISK0 WRITE_PROTECT
```

Example B–10 Setting the Write Protection for an Existing Unit

```
CLI> ADD DISK DISK0 2 0 0
CLI> INITIALIZE DISK0
CLI> ADD UNIT D0 DISK0
CLI> SET D0 WRITE_PROTECT
```

Example B–11 Renumbering Disk Unit 0 to Disk Unit 100

```
CLI> ADD DISK DISK0 2 0 0
CLI> INITIALIZE DISK0
CLI> ADD UNIT D0 DISK0
CLI> DELETE D0
CLI> ADD UNIT D100 DISK0
```

Example B–12 Creating a Transportable Unit from a Disk Device

```
CLI> ADD DISK DISK0 2 0 0 TRANSPORTABLE
CLI> INITIALIZE DISK0
CLI> ADD UNIT D0 DISK0
```

```
[or]
```

```
CLI> ADD DISK DISK0 2 0 0
CLI> SET DISK0 TRANSPORTABLE
CLI> INITIALIZE DISK0
CLI> ADD UNIT D0 DISK0
```

Note

No INITIALIZE is required because DISK0 has already been initialized.

Example B–13 Changing the Replacement Policy of a RAIDset

```
CLI> ADD DISK DISK0 1 0 0
CLI> ADD DISK DISK1 2 0 0
CLI> ADD DISK DISK2 3 0 0
CLI> ADD DISK DISK3 4 0 0
CLI> ADD DISK DISK4 5 0 0
CLI> ADD RAIDSET RAID9 DISK0 DISK1 DISK2 DISK3 DISK4
CLI> INITIALIZE RAID9
CLI> ADD UNIT D0 RAID9
CLI> SET RAID9 POLICY=BEST_FIT
```

Example B–14 Deleting the Unit, Stripeset, and All Disks Associated with a Stripeset

```
CLI> DELETE D0
CLI> DELETE STRIPE0
CLI> DELETE DISK0
CLI> DELETE DISK1
CLI> DELETE DISK2
CLI> DELETE DISK3
```

Note

The replacement policy can be changed at any time.

Glossary

ac distribution

The method of controlling ac power in a cabinet.

adapter

A device that converts the protocol and hardware interface of one bus type into that of another without changing the functionality of the bus. *See* **SCSI bus signal converter**.

allocation class

A numerical value assigned to an HSJ or HSD30 controller to uniquely identify units across multiple, independent controllers. (Controllers in a dual-redundant configuration must have the same allocation class.)

array controller

A hardware/software device that facilitates communications between a host and one or more devices organized in an array. HS family controllers are examples of array controllers.

BA350–M*x* controller shelf

The StorageWorks controller shelf used for HS array controller modules, cache modules, and shelf power supplies.

BA350–S*x* SBB shelf

The common name for any StorageWorks shelf that contains only power units and storage SBBs.

BBR

bad block replacement. The procedure used to locate a replacement block, mark the bad block as replaced, and move the data from the bad block to the replacement block.

BBU

battery backup unit. A StorageWorks SBB option that extends power availability after the loss of primary ac power or a power supply to protect against the corruption or loss of data. This is not used for the HSJ controller shelves.

block

The smallest data unit addressable on a disk. Also called a sector. In DSSI integrated storage elements, a block contains 512 bytes of customer data, EDC, ECC, flags, and the block's address header.

CDU

Cable distribution unit. The power entry device for StorageWorks cabinets. The unit provides the connections necessary to distribute ac power to cabinet shelves and fans.

CI bus

Computer interconnect bus. Uses two serial paths, each with a transfer rate of 70 MB/s (8.75 MB/s).

CLI

Command line interpreter. Operator command line interface for the HS family controller firmware.

container

Any entity that is capable of storing data, whether it is a physical device or a group of physical devices. A disk, a stripeset, and a RAIDset are examples of a container.

controller shelf

A StorageWorks shelf designed to contain controller and cache memory modules.

CRC

An 8-character cyclic redundancy check string used in conjunction with the customer identification string for turning on licensed features such as RAID and write-back caching.

data center cabinet

A generic reference to the large cabinets, such as the SW800-series, in which StorageWorks components can be mounted.

DDL

dual data link. The ability to operate on the CI bus using both paths at the same time.

differential SCSI bus

A signal's level is determined by the potential difference between two wires. A differential bus is more robust and less subject to electrical noise than is a single-ended bus.

DILX

Disk Inline Exerciser. Diagnostic firmware used to test the data transfer capabilities of disk drives in a way that simulates a high level of user activity.

DSA

Digital Storage Architecture. A set of specifications and interfaces describing standards for designing mass storage products. DSA defines the functions performed by host computers, controllers, and disk drives. It also specifies how they interact to accomplish mass storage management.

DSSI

Digital Storage System Interconnect. A Digital-specific data bus with an 8-bit data transfer rate of 4 to 5 MB/s.

dual-redundant

Two controllers in one controller shelf providing the ability for one controller to take over the work of the other controller in the event of a failure of the other controller.

DUART

Dual universal asynchronous receiver transmitter. An integrated circuit containing two serial, asynchronous transceiver circuits.

DUP

Diagnostic and Utility Protocol. Host application software that allows a host operator terminal to connect to the controller's command line interpreter. *See also* **virtual terminal**.

ECC

error correction code. One or more cyclic redundancy check (CRC) words that allow detection of a mismatch between transmitted and received data in a communications system, or between stored and retrieved data in a storage system. The ECC allows for location and correction of an error in the received /retrieved data. All ECCs have limited correction power.

EDC

error detection code. One or more checksum words that allow detection of a mismatch between transmitted and received data in a communications system, or between stored and retrieved data in a storage system. The EDC has no data correction capability.

ESD

electrostatic discharge. The discharge of a potentially harmful static electric voltage as a result of improper grounding.

FAILEDSET

The FAILEDSET is a group of disk drives that have been removed from RAIDsets due to a failure or a manual removal. Disk drives in the FAILEDSET should be considered defective and should be tested, repaired, and then placed into the SPARESET.

failover

Failover is the software process that takes place when one controller in a dual-redundant configuration fails and the other controller takes over the devices of the failed controller and services them to the host until or if the failed controller comes back or is replaced.

flush

The act of writing data from the cache module to the media.

FRU

field replaceable unit. A hardware component that can be replaced.

FWD SCSI

fast, wide, differential SCSI. The differential SCSI bus with a 16-bit data transfer rate of up to 20 MB/s.

half-height device

A device that occupies half of a 5.25 inch SBB carrier. Two half-height devices can be mounted in a 5.25 inch SBB carrier. The first half-height device is normally mounted in the lower part of the carrier. The second device is normally mounted in the upper part of the carrier.

HBVS

Host-Based Volume Shadowing. Also known as Phase 2 Volume Shadowing.

HSOF

HSOF. An abbreviation for Hierarchical Storage Operating Firmware.

HIS

Host Interconnect Services. The firmware in the HS array controller that communicates with the host.

host

The primary or controlling computer to which a storage subsystem is attached.

HS Operating Firmware (HSOF)

Hierarchical Storage Operating Firmware or software contained on a program card used with HS array controllers.

initiator

A SCSI device that requests an I/O process to be performed by another SCSI device (a target). This is always the controller.

KB

The standard abbreviation for kilobyte, 1024 bytes.

KB/s

The standard abbreviation for kilobytes per second.

LED

The standard abbreviation for light emitting diode.

local terminal

A term used to describe a terminal plugged into the EIA–423 maintenance port on the front bezel of the HS array controller. Also called a maintenance terminal.

logical unit (host logical unit)

A physical device or a storageset seen by the host. Often these logical units are spread across more than one physical device, especially in RAID implementations. This is *not* a LUN.

logical unit number

See **LUN**.

LRU

Least recently used. This is cache terminology for the block replacement policy for the read cache.

LUN

A logical unit number is a physical or virtual peripheral device addressable through a target. LUNs use their target's bus connection to communicate on the SCSI bus.

maintenance terminal

Any EIA–423 compatible terminal to be plugged into the HS controller. This terminal is used to identify the controller, enable host paths, define the configuration, and check controller status. It is not required for normal operations. It is sometimes referred to as a local terminal.

MB

The standard abbreviation for megabyte, 1024 kilobytes.

MB/s

The standard abbreviation for megabytes per second.

metadata

Data written on the physical disk that is not visible to the host/customer that allows the HS array controller to maintain a high integrity of customer data.

mirrorsets

Two or more physical disks configured to present one highly reliable virtual unit to the host. NORMAL member, see NORMAL. NORMALIZING member, see NORMALIZING.

MSCP

Mass Storage Control Protocol. The protocol by which blocks of information are transferred between the host and the controller.

nonredundant

A single controller configuration. A controller configuration which does not include an second backup controller permitting failover in the event of a failure.

NORMAL

A mirrorset term for a mirrorset member whose entire contents is guaranteed to be the same as all other NORMAL members. All NORMAL members are exactly equivalent.

NORMALIZING

A mirrorset term for a mirrorset member whose contents is the same as all other NORMAL and NORMALIZING members for data that has been written since the mirrorset was created or lost cache data was cleared. Data that has never been written may differ among NORMALIZING members.

NV

Nonvolatile. A term used to describe memory, the contents of which survive loss of power.

port

The hardware and software used to connect a host controller to a communication bus, such as CI, DSSI, or SCSI bus. This term also is used to describe the connect between the controller and SCSI storage devices.

PTL

Port-Target-LUN device notation. Where **P** designates the port (1 through 6), **T** designates the target ID of the device (0 through 6 in a nonfailover configuration, or 0 through 5 if the controller is in a failover configuration), and **L** designates the LUN of the device (0 through 7).

qualified device

A device that has been fully tested in an approved StorageWorks configuration, (that is, shelf, cabinet, power supply, cabling, and so forth) and is in complete compliance with country-specific standards (for example, FCC, TUV, and so forth) and with all Digital standards.

quiesce

To make a bus inactive or dormant. The operator must quiesce SCSI bus operations, for example, during a device warm swap.

RAID

Redundant array of independent disks. The multiple storage access methods devised for performance (RAID 0, striping) and/or various cost levels of availability (RAID 1 through RAID 5).

RAIDset

Three or more physical disks that are configured to present an array of disks as a single virtual unit to the host.

read cache

The cache is used to accelerate read operations by retaining data which has been previously read, written, or erased, based on a prediction that it will be reread.

replacement policy

The firmware controller method by which a spare disk is selected to replace a disk that has failed in a RAIDset.

SBB

StorageWorks building block. A modular carrier plus the individual mechanical and electromechanical interface required to mount it into a standard shelf. Any device conforming to shelf mechanical and electrical standards is considered an SBB.

SBB shelf

StorageWorks building block shelf. A StorageWorks shelf, such as the BA350–Sx, designed to house plug-in SBB modules.

SCS

System Communication Services. A delivery protocol for packets of information (commands or data) to or from the host.

SCSI

Small Computer System Interface. An ANSI interface defining the physical and electrical parameters of a parallel I/O bus used to connect hosts to a maximum of seven devices. The StorageWorks device interface is implemented according to SCSI–2 standard, allowing the synchronous transfer of 8-bit data at rates of up to 10 MB/s.

SCSI device

A host computer adapter, a peripheral controller, or a storage element that can be attached to the SCSI bus.

SCSI device ID

The bit-significant representation of the SCSI addressing that refers to one of the signal lines numbered 0 through 7. Also referred to as a *target* ID.

SCSI–A cable

A 50-conductor (25 twisted pair) cable used for single-ended, SCSI bus connections.

SCSI–P cable

A 68-conductor (34 twisted pair) cable used for differential bus connections.

Small Computer System Interface

See **SCSI**.

spareset

A pool of disk drives used by the controller to replace failing members of a RAIDset.

SPD

Abbreviation for Software Product Description. A document that products a legal description of a product.

storageset

Any collection of containers, such as stripesets, RAIDsets, the SPARESET, and the FAILEDSET, that make up a container.

StorageWorks

Digital's family of modular data storage products that allows customers to design and configure their own storage subsystems. Components include power, packaging, cabling, devices, controllers, and software. Customers can integrate devices and array controllers in StorageWorks enclosure to form storage subsystems.

StorageWorks building block

See **SBB**.

stripesets

A virtual disk drive with its physical data spread across multiple physical disks. Stripeset configurations do not include a data recovery mechanism.

striped mirrorsets

Stripesets whose members have been mirrored.

tagged command queuing

A technique that allows a device to have multiple I/O requests outstanding to it at one time.

target

Is a SCSI device that performs an operation requested by an initiator. Target is determined by the device's address on its SCSI bus. For example, the HSJ controller can address targets 0 through 6 in a single configuration or targets 0 through 5 in a dual-redundant configuration.

TILX

Tape Inline Exerciser. Diagnostic firmware used to text the data transfer capabilities of tape drives in a way that simulates a high level of user activity.

TMSCP

Tape Mass Storage Control Protocol. The protocol by which blocks of information are transferred between the host and the controller.

unit

The host's view of a container on an HS array controller. A unit may be made up of simply a physical disk or tape drive, or a more complex container such as a RAIDset.

unwritten cached data

Data in the write-back cache which has not yet been written to the physical device, but the user has been notified that the data has been written.

value-added firmware

The firmware that provides logical block mapping, cache, RAID, and so on.

VCS

VAXcluster system console. This terminal allows access to the maintenance port on the controller from the host that connects to other hosts (by networks). Another method of accessing the controller. *See also* **DUP**.

virtual terminal

A software path from an operator terminal on the host to the controller's CLI. The path can be established via the host port on the controller (using DUP) or via the maintenance port through on intermediary host (VCS). A virtual terminal is also sometimes called a host console.

warm swap

A method used to add or swap devices while the system remains on line during device removal, replacement, or addition. All activity on the bus where the device is being swapped must be halted for the duration of the removal, replacement, or addition.

write-back

A cache write strategy that writes to the cache memory, the MAY flush the data to the primary media at some future time. The user sees the operation as complete when the data has reached the cache. The intent of this strategy is to avoid unnecessary accesses to the primary media.

write hole

Undetectable RAID level 1 or 5 data corruption. A write hole is caused by the successful writing of some, but not all, of the storageset members. Write holes occur under conditions such as power outages, where the writing of multiple members can be abruptly interrupted. A battery backed-up cache design eliminates the write hole, because data is preserved and writes can be retried.

write-through cache

A cache write strategy in which the destination of the write data is the primary storage media. This operation may update, invalidate, or delete data from the cache memory accordingly, to ensure that the cache does not contain obsolete data. The user sees the operation as complete only after the backup storage device has been updated.

Index

A

Acceptance tests
  with power applied, 5–17
Adapter
  support for HSD30 array controllers, 3–25
  support for HSJ array controllers, 3–25
  support for HSZ40 array controllers, 3–26
ADD CDROM command, B–2
ADD DISK command, B–3
ADD LOADER command, 7–101, B–5
ADD MIRRORSET command, B–6
ADD OPTICAL command, B–8
ADD PASSTHROUGH command, 7–101, B–10
ADD RAIDSET command, B–11
ADD SPARESET command, B–13
ADD STRIPESET command, B–14
ADD TAPE command, B–15
ADD UNIT command, B–16
Adding a device
  warm swap, 5–29
Adding devices, 7–59
  warm swap, 5–27
Allocation classes
  setting of, 5–7, 5–12
Asynchronous device swaps, 5–27
AUTOGEN.COM file
  change for HSJ/HSD30, 8–5

B

BA350–MA controller shelf
  SCSI ID slots, 3–13
BA350–SB SBB shelf, 1–18
Batteries
  charge time, write-back cache, 2–5
  checking status of, 6–9
  data retention time, 2–4
  life of, 2–5
  recommended replacement time, 5–43
  replacement of, 2–18
  status of, 5–43
  transition from low to good, 2–5
  write-back cache, 2–4
Battery backup unit
  status LEDs, 5–24
BBU
  location of, 1–18
  See battery backup unit, 5–24
BIST, 5–2
Bus exchangers, 2–2
Bus quiesce panel, 2–7, 5–18
Bus state problem
  during bus quiesce, 5–30
  shelf power failure, 5–30
Buttons
  OCP, 5–18

C

Cabinetry, 1–2, 1–17
Cables
  CI host port, 3–24
  DSSI host port, 3–24
  SCSI host port, 3–24
Cabling, 4–6
  CI host port cable handling, 4–7
  controller to device, 4–9
  DSSI host port cable handling, 4–7
  DSSI host port cable lengths, 4–8
  HSD30 controller host port cables, 4–22
  HSJ external host cables
    precautions, 4–21
  HSJ host port cables, 4–21
  HSZ40 controller host port cables, 4–23
  SCSI bus lengths, 4–9
  SCSI host port cable handling, 4–9
  SCSI–2 device cables, 4–9
Cache module, 5–38
  See also Read cache
  See also Write-back cache
  determining the type and version, 4–31
  read cache module description, 2–3
  specifications, 1–14
  upgrade, 4–30
  using C_SWAP to add, 5–32
  write-back cache, 2–3
CACHE_FLUSH_TIMER= qualifier, 6–9
CACHE_POLICY=A qualifier
  for RAIDsets
    for mirrorsets, 2–4

CACHE_POLICY=B qualifier
for RAIDsets
for mirrorsets, 2–4
CD–ROM
always set TRANSPORTABLE, 5–9
configuration restrictions, 3–25
CFMENU utility, 7–59
devices, 7–60
example, 7–59
exiting, 7–71
failedset, 7–64
fields, 7–61, 7–62, 7–63, 7–64, 7–65, 7–67
initializing containers, 7–66
invoking, 7–60
main menu, 7–60
messages, 7–68
mirrorsets, 7–62
passthrough containers, 7–65
RAIDset, 7–63
restrictions, 7–60
spareset, 7–64
storageset, 7–62, 7–63, 7–64
stripeset, 7–62
terminal setup, 7–68
units, 7–67
Chunksize
default, 6–4
max. for stripesets, 6–4
maximum for stripesets, 6–6
RAIDset default, B–40
setting for RAIDsets, 6–10
stripeset default, B–40
CI host port cable, 3–24
internal, 4–7
length, external, 4–7
length, internal, 4–7
lengths, 3–24
CI host port cables (external)
how to install
attaching to star coupler, 4–21
CI host port paths
how to turn on, 4–22, 5–13
CI node number
setting of, 5–7, 5–11
CLCP utility, 7–71
code load abort, 7–73, 7–74
code loading, 7–72
code patch considerations, 7–75
code patching, 7–74
deleting a code patch, 7–77
dependent patches, 7–81
entering a patch, 7–84
entering incorrect firmware version, 7–78
how to exit code patch, 7–75
how to invoke, 7–71
how to invoke code patch, 7–74
how to use code load, 7–72
listing current patches, 7–76
CLEAR_ERRORS CLI command, B–27
CLEAR_ERRORS INVALID_CACHE command, B–28
CLEAR_ERRORS LOST_DATA command, B–29
CLEAR_ERRORS UNKNOWN command, B–30
CLEAR_ERRORS UNWRITEABLE_DATA command, B–31
CLI, 5–4
access from DUP, 8–2
access to, 5–4
error conventions, B–130
error messages, B–130
exit from DUP, 5–6
how to exit, 5–6
initial parameters, 5–6, 5–11
NOTRANSPORTABLE qualifier, 5–10
rules, 5–6
SET NOFAILOVER command, 2–18
setting the CLI prompt, 5–5
six command sets, 5–5
TRANSPORTABLE qualifier, 5–10
warning conventions, B–150
warning messages, B–150
CLI commands, B–1
CLI SET FAILOVER command, 5–12
CLONE Utility
cloning a mirrorset, 7–92
cloning a single device unit, 7–87
cloning a striped mirrorset, 7–96
description of, 7–85
Cluster size, 8–7
formula, 8–7
Code Load/Code Patch utility
See CLCP utility, 7–71
Command disks, 2–15, 7–101
communicating with, 7–103
defined
for HSJ and HSD30 array controllers, 1–13
how to create, 7–101
maintenance of, 7–103
performance of, 7–103
uses for, 7–101
with DILX, 7–101
Command Line Interpreter
defined, 2–14
See also CLI, 5–4
Commands
ADD CDROM, B–2
ADD DISK, B–3
ADD LOADER, B–5
ADD MIRRORSET, B–6
ADD OPTICAL, B–8
ADD PASSTRHOUGH, B–10
ADD RAIDSET, B–11
ADD SPARESET, B–13
ADD STRIPESET, B–14
ADD TAPE, B–15

Commands (cont'd)
ADD UNIT, B–16
CLEAR_ERRORS CLI, B–27
CLEAR_ERRORS INVALID_CACHE, 6–9, B–28
CLEAR_ERRORS LOST_DATA, B–29
CLEAR_ERRORS UNKNOWN, B–30
CLEAR_ERRORS UNWRITEABLE_DATA, 6–8, B–31
DELETE *container-name*, B–32
DELETE FAILEDSET, B–33
DELETE SPARESET, B–34
DELETE *unit-number*, B–35
DIRECTORY, B–36
disk-device-name, B–129
EXIT, B–37
HELP, B–38
INITIALIZE, B–39
LOCATE, B–41
LOCATE CANCEL, B–41
LOCATE DISKS, B–41
LOCATE entity, B–42
LOCATE LOADERS, B–41
LOCATE OPTICALS, B–41
LOCATE PTL SCSI-location, B–42
LOCATE TAPES, B–41
LOCATE UNITS, B–42
MEMBERSHIP=*number-of-members*, B–62
MIRROR *disk-device-name1 container-name*, B–43
REDUCE *disk-device-name1 [disk-device-nameN]*, B–45
REDUCED, B–12
REMOVE=*disk-container-name*, B–74
REMOVE=*disk-device-name*, B–63
RENAME, B–47
REPLACE=*disk-container-name*, B–74
REPLACE=*disk-device-name*, B–62
RESTART OTHER_CONTROLLER, 2–19, B–48
RESTART THIS_CONTROLLER, B–50
RETRY_ERRORS UNWRITEABLE_DATA, B–53
RUN, B–54
SELFTEST OTHER_CONTROLLER, B–55
SELFTEST THIS_CONTROLLER, B–57
SET *disk-container-name*, B–59
SET FAILOVER, B–60
SET *mirrorset-container-name*, B–62
SET NOFAILOVER, B–65
SET OTHER_CONTROLLER, B–66
SET *raidset-container-name*, B–73
SET THIS_CONTROLLER, B–75
SET *unit-number*, B–82
SHOW *cdrom-container-name*, B–93
SHOW CDROMS, B–92
SHOW DEVICES, B–94
SHOW *disk-container-name*, B–96

Commands (cont'd)
SHOW DISKS, B–95
SHOW FAILEDSET, B–97
SHOW *loader-container-name*, B–99
SHOW LOADERS, B–98
SHOW *mirrorset-container-name*, B–102
SHOW MIRRORSETS, B–100
SHOW *optical-container-name*, B–104
SHOW OPTICALS, B–103
SHOW OTHER_CONTROLLER, B–105
SHOW PASSTHROUGH, B–107
SHOW *passthrough-container-name*, B–108
SHOW *raidset-container-name*, B–111
SHOW RAIDSETS, B–109
SHOW SPARESET, B–112
SHOW STORAGESETS, B–113
SHOW *stripeset-container-name*, B–117
SHOW STRIPESETS, B–115
SHOW *tape-container-name*, B–119
SHOW TAPES, B–118
SHOW THIS_CONTROLLER, B–120
SHOW *unit-number*, B–124
SHOW UNITS, B–123
SHUTDOWN OTHER_CONTROLLER, B–125
SHUTDOWN THIS_CONTROLLER, B–127
CONFIG utility
description of, 7–57
for adding new devices, 7–57
how to run, 7–57
Configuration
5¼-Inch SBB restrictions, 3–19
3½-inch SBBs, 3–17
atypical, 3–21
combinations, 3–1
command disks, 7–101
deskside RAID enclosure, 3–11, 3–22, 3–23
for 5¼-inch SBBs, 3–20
for highest availability, 3–16
for optimal availability, 3–15
for optimal performance, 3–14
initial steps, 5–11
nonredundant, 5–6
intermixing SBB sizes, 3–21
loaders, 7–101
of devices
of storagesets, 5–9
ordering, 3–1
predefined, 3–1
printing configuration information, 5–6
recommended, 3–17
rules and restrictions, 3–1
starter subsystem, 3–1
storage
automatic, 7–59
SW300-series cabinet shelf, 3–7, 3–22, 3–23
when to use a maintenance terminal, 5–4
when to use a virtual terminal, 5–4

Configuration menu
See CFMENU utility
Configuration mismatch
port LED state, 5–23
Configuration parameters
Are they preset?, 4–20
Configuration rules
for dual-redundant, 3–13
for SCSI–2 device cables, 4–9
for shelf power, 4–2
for SW300-series cabinet, 3–8
for SW300-series cabinet shelf, 3–8
for SW500-series cabinet, 3–6
for SW800-series cabinet, 3–2
for SW*xxx* cabinets, 4–13
nonredundant controller, 3–13
shelf, 3–10
SW300-series cabinet shelf, 3–11
SW800-series
SW500-series, 4–13
Configure-to-order
See CTO
Container, 2–17
defined, 1–10
Controller
causes for initialization, 7–1
Controller configurations
nonredundant
dual-redundant, 1–3
Controller ID
setting before failover, 2–17
setting of, 5–7
slot numbers, 1–18
Controller module
how to remove, 5–35
how to replace, 5–40
SHUTDOWN, 5–43
specifications, 1–14
Controller SCSI ID slots, 3–13
Controller shelf
BA350–MA
SW300-series cabinet shelf, 1–17
SW300-series cabinet shelf, 3–11
Controller storage addressing
explained, 1–8
Controller warm swap, 5–30
ID slots, 5–31
tools, 5–32
COPY= qualifier, 2–17
CTO, 3–1
controller subsystems installation, 4–10
Customer acceptance tests
with power applied, 5–17
C_SWAP
adding a second controller/cache, 5–32
for adding modules, 4–24
for upgrading cache modules, 5–32

D

DAEMON, 5–2
DDL
for HSJ array controllers, 1–12
DEC OSF/1, 8–17
calculating minor number, 8–35
configuration file entries, 8–40
configuring HSZ, 8–25
creating a special file, 8–35
DECsafe ASE, 8–21
device special files for HSZ40, 8–22
file utility, 8–38
genvmunix, 8–43
iostat, 8–42
MAKEDEV minor number, 8–37
MAKEDEV utility, 8–36
mknod utility, 8–23
SCU utility, 8–39
Special Files, 8–34
specific procedures, 8–28
system terminology, 8–26
uerf utility, 8–17
DECevent
for OpenVMS VAX
for OpenVMS Alpha, 8–13
DECsafe (ASE), 8–21
Default
for SCSI target ID, 5–11
DELETE *container-name* command, B–32
DELETE FAILEDSET command, B–33
DELETE SPARESET command, B–34
DELETE *unit-number* command, B–35
Deskside RAID enclosure
See SW300-series cabinet shelf
Device warm swap
asynchronous swaps not supported, 5–27
defined, 5–27
Devices
CFMENU utility, 7–60
configuring, automatic, 7–59
non-Digital supplied, 1–16
rules for moving, 5–45
Diagnostic utility protocol
See DUP, 2–14
DILX
defined, 7–2
example, all defaults w/HSZ40, 7–15
example, all units option w/HSZ40, 7–14
example, auto-configure w/all units, 7–11
example, auto-configure w/half of units, 7–10
example, auto-configure w/HSZ40, 7–12
example, using all defaults (read-only), 7–9
example, using all functions, 7–6
examples for running, 7–4
for storagesets, 5–18
interrupting, 7–4

DILX (cont'd)
invoking for virtual terminal DUP connection, 7–3
invoking from maintenance terminal, 7–3
invoking from VCS, 7–3
User-Defined test, 7–6
with command disks, 7–101
DIRECTORY command, B–36
Disk drive
removal from mirrorsets, 5–28
warm swap, 5–28, 5–29
warm swap removal, 5–28
warm swap replacement, 5–29
DISMOUNT command (host)
use of, 5–45
DSSI bus rules, 1–6
DSSI bus termination, 1–6
DSSI host port cables, 3–24, 4–7
lengths
connector type, 4–8
node-to-node max. length
end-to-end max. length, 3–24
DSSI host port path
how to enable, 5–13
DSSI node number
setting of, 5–7, 5–11
Dual controller port, 2–12
terminal communication, 2–11
Dual data link
defined
for HSJ array controllers
See also DDL, 1–12
dual-redundant controller
display problems, 5–16
Dual-redundant controller
configuration, 1–3
configuration rules, 3–13
configurations, 2–1
failover, 2–16
sharing information, 2–18
DUP connection, 2–14
from OpenVMS systems, 8–2
DWZZA host adapter
desktop model
SBB model, 1–7

E

EIA–423 terminal port
connecting to, 4–19
See also modified modular jack, 2–10
Electrostatic discharge protection
grounding, 4–4, 4–5
See also ESD, 4–4
EMU, 5–24
button and LED errors, 5–26
controller fault detection, 5–25
fault detection, 5–24
EMU (cont'd)
functions, 5–24
Environmental considerations
FCC class
temperature and humidity, 4–2
Environmental Monitor Unit
See EMU, 5–24
Environmental specifications, 4–2
ERASE commands
maximum byte count, 8–4
ERF operating system limitations
with OpenVMS Alpha, 8–9
with OpenVMS VAX, 8–9
Error codes
how to clear, OCP, 5–24
OCP LEDs, 5–20
Error correction code (ECC), 5–2
Error state, devices
visual, 5–18
ESD
for program cards, 4–6
grounding preparation, 4–4
precautions, 4–4
procedure for modules, 4–5
ESD shield
for program card, 2–10
Example
CFMENU utility, 7–59
changing the replacement policy of a RAIDset
See example, B–156
creating a transportable unit from a disk device
See example, B–156
creating a unit from a disk device
See example, B–155
creating a unit from a disk device and setting it write protected
See example, B–155
creating a unit from a five-member RAIDset
See example, B–155
creating a unit from a four-member stripeset.
See example, B–155
creating a unit from a tape device
See example, B–155
Deleting the unit, stripeset and disks associated with a stripeset
See example, B–157
renumbering disk unit 0 to disk unit 100
See example, B–155
write protecting an existing unit
See example, B–155
EXEC, 2–13, 5–2
Exercisers
See DILX, 7–2
See TILX, 7–17
Exit
CFMENU utility, 7–71

EXIT command, B–37
from CLI, 5–6

F

Failback operation
from failover, 2–22
Failedset
CFMENU utility, 7–64
delete, 6–14
showing members
deleting member from, 6–14
Failover, 2–12
as seen by HSZ hosts, 2–22
configuration, 2–16
correcting mismatch, 2–19
description of, 2–16
exiting, 2–18
failback operation, 2–22
for HSZ40, 2–20
HSZ host bus, 2–18
initiate with C_SWAP, 2–22
KILL signal, 2–20
RAIDsets, 2–4
resolving a hardware mismatch, 2–19
restart mismatch, 2–19
reviving failed controller, 2–19
setting of, 2–17
shared commands, 2–16
simulated power fail, 2–20
taking controllers out of, 2–18
time to complete, 2–19
transparent, 2–20
transparent for HSZ40, 2–20
when to use SET NOFAILOVER, 2–18
with unconfigured controllers, 2–17
with write-back cached units, 2–19
FAILOVER command, 5–12
Fault codes
on OCP, 2–6
Fault Manager Utility (FMU), 7–59
Firmware
program card, 2–9
Firmware Licensing System
See also FLS, 7–54
Firmware upgrade, 4–28
FLS, 7–54
disabling options, 7–54
enabling options, 7–54
example, 7–55
invoking, 7–54
license key, 7–54
licensed features, 6–9
main menu, 7–54
messages, 7–57
options, 7–54
trial period, 6–9
Flush
clearing cache module memory, 6–8
data from cache, 2–4
write data, 6–8
FMU
reference only, 7–59
FYDRIVER for OpenVMS
how to load, 8–3
FYDRIVER OpenVMS Alpha
how to load, 8–16

G

Grounding, 4–5
ESD, 4–4
Grounding studs
location of in SW500-series cabinet, 4–4
location of in SW800-series cabinet, 4–4

H

H879–AA external terminator
for HSZ40 array controllers, 1–7
H885–AA trilink connector block
for HSZ40 array controllers, 1–7
HELP command, B–38
Hierarchical Storage Operating Firmware
See also HSOF., 2–12
Host adapters
support of
HSD30 array controllers, 3–25
HSJ array controllers, 3–25
HSZ40 array controllers, 3–26
Host interconnect protocols, 2–13
Host interface
HSD30 controller to DSSI, 3–24
HSJ controller to CI, 3–24
HSZ40 controller to SCSI, 3–24
Host port cable installation
for HSZ40 controllers, 4–23
Host port cable lengths
external CI to star coupler, 4–7
for HSD30 controllers, 4–8
for HSZ40 controllers, 4–9
internal CI, 4–7
Host port paths
how to disable, 5–8
how to enable, 5–8
turning on for HSD30, 4–23
Host storage addressing, 1–10
explained for HSZ40 array controllers, 1–11
Housing
of HS array controllers, 1–2
HS array controller
bus exchangers, 2–2
cabinetry, 1–2
core functions, 2–13
dual-redundant controller installation, 4–24

HS array controller (cont'd)
executive functions, 2–13
features of, 1–12
firmware overview, 2–12
hardware functional overview, 2–1
initialized by, 5–1
interface host port, 2–3
OpenVMS AUTOGEN.COM change, 8–5
overview, 1–1
personnel needed, 4–3
policy processor, 2–2
read cache module option, 1–15
SCSI–2 device ports, 2–3
self-test and diagnostics, 2–13
shared memory, 2–2
site preparation, 4–1
subsystem installation, 4–10
subsystem power, 4–2
tools for installation, 4–3
warm swap, 5–30
write-back cache module option, 1–15
HSD30 array controller
controllers per DSSI bus, 1–5
description of, 1–4
DSSI bus rules, 1–6
host port cable lengths, 4–8
installing host port cables, 4–16
mating guide for host port connector, 4–7
module specifications, 1–14
OCP, 2–7
separate buses, 1–6
separate host buses, 3–13
turning on host paths, 4–23
HSJ array controller
dual data link, 1–12
installing host port cables
nonredundant
dual-redundant, 4–15
module specifications, 1–14
OCP, 2–7
setting quiet slot time, 4–15
subsystem hardware block diagram, 1–4
HSJ30 array controller
description of, 1–2
HSJ40 array controller
description of, 1–2
preconfigured subsystems, A–4
HSOF, 2–12
HSZ40 array controller
configuring units, 8–30
description of, 1–6
HSZterm, 2–14
installing host port cables
nonredundant
dual-redundant, 4–17
module specifications, 1–15
OCP, 2–8
SCSI target IDs, 1–19
HSZ40 array controller (cont'd)
setting SCSI ID, 5–11
terminator, 1–7
trilink connector block, 1–7
with DWZZA host adapters, 1–7
HSZ40–B*x* array controller
terminal phone cable
terminal coupler, 2–10
terminal port, 2–11
HSZterm utility, 7–59
for HSZ virtual terminal connection, 1–13
virtual terminal connection, 2–14

I

ID
setting of, 5–7
I/D cache, 2–2
IDs
of controller slots, 1–18
Initial reconstruct, 6–5
Initialization
cache module, 5–4
CFMENU utility, 7–66
controller, 7–1
controller subsystem, 5–3
diagnostics, 5–3
dual-redundant configuration, 5–3
of array controllers, 5–1
of containers, 5–10
time to complete, 5–1
with bad cache, 2–13
with bad ports, 2–13
Initialization state
visual, 5–18
INITIALIZE command, 5–10, B–39
Installation
dual-redundant controller, 4–24
HSD30 host port cables
trilink connector block
terminators, 4–22
of HSJ (CI) host port cables, 4–21
preconfigured subsystems
CTO subsystems, 4–10
for CTO subsystems, 4–14
program card, 4–27
read cache
write-back cache, 5–43

K

Key, licensed features, 7–54
KILL signal
function of, 2–20

L

Lamp test, B–41
LED error codes, 5–20
  how to clear, 5–24
  on OCP, 2–6
LEDs
  OCP, 5–18
License keys
  FLS, 7–54
Licensed features, 7–54
  hourly message, 6–9
Loaders, 7–101
Local programs, 2–14, 7–2
LOCATE CANCEL command, B–41
LOCATE command, B–41
LOCATE DISKS command, B–41
LOCATE entity, B–42
LOCATE LOADERS command, B–41
LOCATE OPTICALS command, B–41
LOCATE PTL SCSI-location command, B–42
LOCATE TAPES command, B–41
LOCATE UNITS command, B–42
Log file
  from virtual terminal, 5–6
  /LOG= qualifier, 8–3
Logical unit number
  See LUN
LUN
  always zero, 1–10
  controller perspective, 1–10
  host perspective, HSZ40 array controllers, 1–12
  multiple LUNs, 7–101
  non-zero LUNs, 1–10

M

Maintenance terminal
  connecting, 4–19
Maintenance terminal port, 2–10
Mating guide
  for HSD30 host port, 4–7
MAX_NODES
  setting of, 5–6
MEMBERSHIP=*number-of-members*, B–62
Messages
  CFMENU utility, 7–68
  FLS, 7–57
Metadata
  defined, B–39
  rundown of, 5–45
Minimum integrity diagnostics
  See also MIST, 5–2
MIRROR *disk-device-name1 container-name* command, B–43
Mirrored stripesets, 6–2
Mirroring, 6–2
  Turning on the license key, 7–54
Mirrorsets
  CFMENU utility, 7–62
  device removal, 5–28
  how to create, 6–22
  low battery on write-back cache
    CACHE_POLICY=A, 2–4
    CACHE_POLICY=B, 2–4
  maximum members, 6–7
  member on different ports, 6–8
  MIRROR *disk-device-name container-name*, 6–25
  on HSJ and HSD30, 6–7
  on HSZ, 6–7
  removing a member, 6–24
  SET commands, 6–23
  SHOW commands, 6–24
  when batteries fail, 6–7
  with different disk sizes, 6–8
  with RAIDsets limit, 6–8
Mismatch
  of configuration information, 2–19
MIST, 5–2
Modified modular jack (MMJ), 2–1
  for HSZ40–B*x*, 2–11
Module
  ESD protection, 4–5
  handling guidelines, 4–5
  specifications, 1–14
MSCP allocation class
  setting of, 5–7, 5–12
MSCP protocol
  for HSJ and HSD30, 1–19
Multiple LUN support
  HSJ, HSD30, 1–10, 7–101
  with command disks, 2–15

N

Nonredundant controller
  configuration rules, 3–13
  defined, 1–3
Nontransportable, 5–17
Nonvolatile memory
  See also NVMEM, 2–10
NOTRANSPORTABLE qualifier
  CLI, 5–10
NVMEM, 2–10

O

OCP
  description of, 2–6, 5–18
    disk drive configuration mismatch
      disk drive failure, 5–23
    for HSD30 array controller, 2–7
    for HSJ array controllers, 2–7
    for HSZ array controllers, 2–8
    how it functions, 5–18
    LED code normal state, 5–24
    LED error codes, 5–20
    Led error codes, clearing, 5–24
    use of buttons, 5–18
    use of LEDs, 5–18
OpenVMS
    preferred path utility, 8–6
    SHOW DEVICE, 8–6
OpenVMS Alpha
    DECevent, 8–13
    ERF support, 8–9
    loading the FYDRIVER, 8–16
OpenVMS VAX
    AUTOGEN.COM change, 8–5
    changing timeout value, 8–8
    DECevent, 8–13
    device size limitation, 8–3
    ERF support, 8–9
    maximum byte count for ERASE, 8–4
    shadow set members, 8–8
    using CLUSTER_SIZE qualifier, 8–7
Operating system support, 8–1
    device capacity, 8–3
    fully supported, 8–1
    limitations
      SHOW DEVICE, 8–6
    minimum versions, 8–2
    OpenVMS Alpha, 8–16
    OpenVMS VAX, 8–3
    support with limitations, 8–1
Operating system support limitations
    cluster size, 8–7
    DCL BACKUP/IMAGE, 8–7
    DCL INITIALIZE, 8–7
    shadow set members, 8–8
Operator control panel
    HSD30 array controller, 2–7
    HSJ array controllers, 2–7
    HSZ array controller, 2–8
    See also OCP, 2–6
OTHER_CONTROLLER
    defined, 2–16
Overview
    HS array controllers, 1–1

P

Parameters
    setting, 5–6
Passthrough containers, 7–101
    CFMENU utility, 7–65
Paths (host port)
    how to disable, 5–8
    how to enable, 5–8
PCMCIA card
    See program card., 2–9
Performance
    for highest, 3–14
    setting optimal configurations, 3–14
Physical description
    of HSD30 array controller, 1–4
    of HSJ30
      of HSJ40, 1–2
    of HSZ40 array controller, 1–6
Port buttons
    numbering, 5–18
Port Target LUN
    See PTL
Power cords
    country specific, 4–2
Power supply
    failure, 5–30
    location of, 1–18
    status LEDs, 5–24
Powering off your system
    rules for, 5–43
Preconfigured subsystems, A–4
    installation, 4–10
Preferred paths
    setting for HSJ
      setting for HSD30, 5–13
    setting for HSZ, 5–14
Program card
    description of, 2–9
    ECC, 5–2
    ESD protection, 4–6
    ESD shield
      precautions, 2–10
    handling guidelines, 4–5
    insertion
      removal, 4–27
    upgrade of dual-redundant configuration, 4–29
    upgrade of nonredundant configuration, 4–28
Prompt
    setting the CLI prompt, 5–5
Protocols
    CI
      DSSI
        SCSI, 2–13
    controller host interface, 1–7
    host interconnect, 2–13
    MSCP

Protocols
MSCP (cont'd)
TMSCP, 1–19
SCSI (to devices), 1–19
SCSI (to hosts), 1–19
PTL
controller perspective, 1–10
host perspective, HSZ40 array controllers, 1–12
specifying device locations, 5–5

Q

Quiesce
the bus, 5–27
troubleshooting, 5–30
Quiet slot time
setting for HSJ, 4–15

R

RAID
FLS, 7–54
levels supported, 1–13
RAID 0
striping, 6–2
RAID 0 & 1, 6–2
RAID 1
mirroring, 6–2
RAID 3 elements, 6–3
RAID 5, 6–4
Turning on the license key, 7–54
RAID 0
ADD STRIPESET, 6–17
SHOW STRIPESET, 6–17
RAIDset
ADD RAIDSET command, 6–10
ADD SPARESET command, 6–11
DELETE SPARESET command, 6–13
ADD UNIT, 6–11
availability of, 6–25
CFMENU utility, 7–63
changing characteristics, 6–14
configurations, 6–25
cost of, 6–25
creation of, 6–10
deletion of, 6–15
device removal, 5–28
failover, 2–4
initialization
set chunk size, 6–10
low battery on write-back cache
CACHE_POLICY=A, 2–4
CACHE_POLICY=B, 2–4
maximum members, 6–7
member replacement policies, 6–10
members on different ports, 6–8
moving, 6–16
RAIDset (cont'd)
on HSJ and HSD30, 6–7
on HSZ, 6–7
performance of, 6–25
planning, 6–9
reconstruction policy, 6–6
reconstruction rates, 6–10
REDUCED qualifier, 6–17
reduced RAIDset member replacement, 6–15
redundancy, 6–6
removing a member, 6–14, 6–15
replacement policy, 6–6
rules, 6–7
SHOW commands, 6–11
SHOW RAIDSETS command, 6–11
size, 6–9, B–11
states, 6–5
stripe size, 6–6
when batteries fail, 6–7
with different disk sizes, 6–8
RAIDsets
with mirrorsets limit, 6–8
Read cache, 5–38
determining module the version, 4–31
cache hit, 2–3
cache miss, 2–3
cache transfer size, 2–3
how to remove, 5–39
installing, 5–43
LRU replacement algorithm, 2–3
module description, 2–3
module option
module upgrade, 1–15
replacing, 5–43
Reconstruct
two types, 6–5
REDUCE *disk-device-name1 [disk-device-nameN]*, 6–24
REDUCE *disk-device-name1 [disk-device-nameN]* command, B–45
REDUCED, B–12
REDUCED qualifier, 6–17
Remote system management
through DUP, 2–14
through HSZterm, 1–12
Removal
read cache, 5–39
REMOVE= qualifier, 6–15
REMOVE=*disk-container-name*, B–74
REMOVE=*disk-device-name*, B–63
Removing a device
warm swap, 5–27
RENAME command, B–47
REPLACE= qualifier, 6–15
REPLACE=*disk-container-name*, B–74

REPLACE=*disk-device-name*, B–62
Replacement
read cache
write-back cache, 5–43
Replacing a device
warm swap, 5–29
Reset (//) button, 5–18
controller failure, 2–6
controller initialization, 2–19
controller restarts, 2–6
Reset state
recovering from, 2–10
RESTART OTHER_CONTROLLER command, 2–19, B–48
RESTART THIS_CONTROLLER command, B–50
Restrictions
CFMENU utility, 7–60
FLS, 7–54
RETRY_ERRORS UNWRITEABLE_DATA command, B–53
Rules
for system power off, 5–43
RUN command, B–54

S

SBB shelf, 1–18
SBB shelf device
3½-inch
5¼-inch, 1–17
numbering
addresses, 1–18
rules for moving, 5–45
warm swap, 5–27
SCS node name
setting of, 5–7
SCSI bus
lengths, 4–9
termination, 4–24
SCSI host cable, 3–24
length, 3–24
SCSI hosts
and storage, 1–11
SCSI ID slots
in BA350–MA controller shelf, 3–13
when adding a second controller, 4–25
SCSI protocol
to devices, 1–19
to hosts, 1–19
SCSI target IDs
configurations, 2–20
default, 5–11
dual-redundant configuration, 2–16
setting of, 5–7, 5–11
SCSI–2 address
of devices, 1–18
SCSI–2 address of devices
determined by, 1–18
SCSI–2 device cables
guidelines, 4–9
SCSI–2 device ports, 2–3
SCSI–2 trilink connector block
for HSZ40 array controllers, 1–7
Self-test and diagnostics
of controller, 2–13
SELFTEST OTHER_CONTROLLER command, B–55
SELFTEST THIS_CONTROLLER command, B–57
SET *disk-container-name* command, B–59
SET FAILOVER command, 5–12, B–60
SET *mirrorset-container-name* command, B–62
SET NOFAILOVER command, 2–18, B–65
when to use, 2–18
SET OTHER_CONTROLLER command, B–66
SET RAIDset
REMOVE= qualifier, 6–15
REPLACE= qualifier, 6–15
SET *RAIDset-container-name* command, B–73
SET THIS_CONTROLLER command, B–75
SET *unit-number* command, B–82
Shadow sets (host-based)
mixing drives, 8–8
physical size, 8–8
timeout value, 8–8
Shared memory
on controller module, 2–2
Shelf
configurations, 3–10
Shelf power
configuration rules, 4–2
SHOW *cdrom-container-name* command, B–93
SHOW CDROMS command, B–92
SHOW DEVICES command, B–94
SHOW *disk-container-name* command, B–96
SHOW DISKS command, B–95
SHOW FAILEDSET command, B–97
SHOW *loader-container-name* command, B–99
SHOW LOADERS command, B–98
SHOW *mirrorset-container-name* command, B–102
SHOW MIRRORSETS command, B–100
SHOW *optical-container-name* command, B–104
SHOW OPTICALS command, B–103
SHOW OTHER_CONTROLLER command, B–105
SHOW PASSTHROUGH command, B–107
SHOW *passthrough-container-name* command, B–108
SHOW *raidset-container-name* command, B–111
SHOW RAIDSETS command, B–109
SHOW SPARESET command, B–112
SHOW STORAGESETS command, B–113

SHOW *stripeset-container-name* command, B–117
SHOW STRIPESETS command, B–115
SHOW *tape-container-name* command, B–119
SHOW TAPES command, B–118
SHOW THIS_CONTROLLER command, B–120
  determining the cache module type, 4–31
SHOW *unit-number* command, B–124
SHOW UNITS command, B–123
SHUTDOWN
  controller, 5–43
  use of, 5–45
SHUTDOWN OTHER_CONTROLLER command, 5–43, B–125
SHUTDOWN THIS_CONTROLLER command, 5–43, B–127
Site preparation, 4–1
Slot numbers
  for controllers, 1–18
  for SBBs, 1–18
Sparesets
  adding members
    deleting members, 6–13
  CFMENU utility, 7–64
  defined, 6–6, B–13
Specifications
  cache modules, 1–14
  controller modules, 1–14
  environmental, 4–2
  HSD30 array controller module, 1–14
  HSZ40 array controller module, 1–15
Star coupler
  attaching CI cables, 4–21
  CI cable length to, 4–7
Status LEDs
  battery backup unit, 5–24
  power supply, 5–24
Storage addressing
  controller perspective, 1–8
  controller PTL, 1–10
  differences in HSZ40 array controllers, 1–12
  host perspective, 1–10
  host perspective, HSZ40 array controllers, 1–11
  host PTL, HSZ40 array controllers, 1–12
Storage shelf
  SW300-series cabinet shelf, 3–11
Storagesets
  CFMENU utility, 7–62, 7–63, 7–64
  defined, B–113
  maximum number of, 6–8
  SHOW command, 6–13
StorageWorks products, 1–16
Striped mirrorsets
  device limit, 6–8
Stripesets
  add
    initialize, 6–17
  CFMENU utility, 7–62
  defined, 6–6
Stripesets (cont'd)
  maximum chunksize, 6–6
  mirrored, 6–2
  SHOW command, 6–12
  showing, 6–17
  when batteries fail, 6–7
SW300-series cabinet
  configuration rules, 3–8
SW300-series cabinet shelf
  configuration, 3–22, 3–23
  configuration rules, 3–11
  SW300 configuration rules, 3–8
  SW500 configuration, 3–7
SW500-series cabinet, 1–17
  capacity, 4–11
  configuration rules, 3–6, 4–13
SW800-series cabinet
  configuration rules, 3–2
SW800-series data center cabinet, 1–17
  capacity, 4–12
  configuration rules, 4–13
SWAP_L interrupt signal, 5–30
System management
  of HS array controllers, 8–2

T

Tagged command queuing, 1–19
Tape drives
  warm swap, 5–30
Target IDs
  HSZ40 array controller, 1–11
Target IDs, SCSI
  setting of, 5–11
Terminal port, 2–10
Terminal setup
  CFMENU utility, 7–68
Termination
  of SCSI bus, 4–24
Terminator
  for HSD30 array controllers, 1–5
  for HSZ40 array controllers, 1–7
  installation for HSD30, 4–22
  part number for HSD30, 4–22
  part number for HSZ, 4–23
THIS_CONTROLLER
  defined, 2–16
TILX
  defined, 7–17
  example, using all defaults, 7–20
  example, using all functions, 7–19
  interrupting, 7–18
  invoking form maintenance w/VCS, 7–17
  invoking from a maintenance terminal, 7–17
  invoking from virtual terminal, 7–17
TMSCP allocation class
  setting of, 5–7, 5–12

TMSCP protocol
for HSJ and HSD30, 1–19
Tools
for controller module removal, 5–35
for subsystem installation, 4–3
Transportable, 5–17
adding non-HS array controller devices, 5–17
TRANSPORTABLE qualifier
CLI, 5–10
Trilink connector block
for HSD30 array controllers, 1–5
for HSZ40 array controllers, 1–7
installation of (HSZ), 4–23
installation on an HSD30, 4–22
part number for HSD30, 4–22
part number for HSZ, 4–23

U

Units
adding, B–16
CFMENU utility, 7–67
UNMIRROR *disk-device-name* command, B–129
Unpacking
subsystem, 4–10
Unwritten cached data
defined, 2–4
how to avoid, 6–8
Upgrades
components, 4–30
to your cache module, 4–30

V

VAX VMS
AUTOGEN.COM change, 8–5
VAXcluster console system
See VCS., 2–1
VCS, 7–2, 7–21
do not use Ctrl/G, 7–18
invoking TILX from, 7–17
reference, 8–3
Virtual terminal connection
connecting to CLI, 8–2
DUP, 7–3
HSZterm, 7–2
DUP with VMS, 8–2
for HSZ40, 1–13, 8–22
HSZterm, 2–14
VTDPY
description, 7–21
help, 7–53
how to run, 7–22
interpretation of display fields, 7–23
use of control keys, 7–22

W

Warm swap
defined (for devices), 5–27
disk and tape SBB replacement
device addition, 5–29
for controller modules, 5–30
for cache modules, 5–31
for SBBs, 5–27
of mirrorset members, 5–28
of RAIDset members, 5–28
tape drives, 5–30
Write hole, 2–4
Write-back cache
and power failure, 2–4
avoiding unwritten cached data, 2–4
battery, 2–4, 2–18
battery discharge, 2–4
before moving module, 6–9
cache flush, 2–4
charge time, batteries, 2–5
checking module battery status, 6–9
data retention time, 2–4
determining the module version, 4–31
failover considerations, 2–19
FLS, 7–54
hardware description
battery disposition, 2–3
how to enable
how to disable, 6–9
installing, 5–43
module mismatch, 6–9
module option
module upgrade, 1–15
RAID level 5, 6–9
replacing, 5–43
Turning on the license key, 7–54
unwritten cache data, 2–19
unwritten cached data, 2–3
using C_SWAP to add, 5–32
write hole, 2–4
write-through caching, 2–4
Write-through caching
read cache, 2–3
write-back cache, 2–4